UNITED STATES PATENT AND TRADEMARK OFFICE

UNITED STATES DEPARTMENT OF COMMERCE
United States Patent and Trademark Office
Address: COMMISSIONER FOR PATENTS
P.O. Box 1450
Alexandria, Virginia 22313-1450
www.uspto.gov

APPLICATION NO.	FILING DATE	FIRST NAMED INVENTOR	ATTORNEY DOCKET NO.	CONFIRMATION NO.
12/050,739	03/18/2008	Nobuyuki Sakamoto	Q106816	9230

7590 04/01/2009
SUGHRUE MION, PLLC
2100 PENNSYLVANIA AVENUE, N.W.
SUITE 800
WASHINGTON, DC 20037

EXAMINER
VU, HIEN D

ART UNIT	PAPER NUMBER
2833	

MAIL DATE	DELIVERY MODE
04/01/2009	PAPER

DECISION GRANTING PETITION UNDER 37 CFR 1.138(d)

The declaration of express abandonment is recognized

This is in response to the petition under 37 CFR 1.138(d), requesting for a refund of any previously paid search fee and excess claims fee in the above-identified application.

The petition is granted.

The express abandonment is recognized. Any previously paid search fee and excess claims fee are hereby refunded.

Telephone inquiries should be directed to the Office of Data Management at (571) 272-4200.

Patent Publication Branch
Office of Data Management

Adjustment date: 04/01/2009 NFARMER
03/19/2008 INTEFSW 00002612 194880 12050739
02 FC:1111 510.00 CR

FORM PET651G (Rev. 08/07)

UNITED STATES PATENT AND TRADEMARK OFFICE

Commissioner for Patents
United States Patent and Trademark Office
P.O. Box 1450
Alexandria, VA 22313-1450
www.uspto.gov

OSHA LIANG/MI
TWO HOUSTON CENTER
909 FANNIN STREET, SUITE 3500
HOUSTON TX 77010

COPY MAILED

OCT 27 2008

OFFICE OF PETITIONS

In re Application of	:	
Gary E. Fout et al.	:	
Application No. 12/050,796	:	ON PETITION
Deposited: March 18, 2008	:	
Attorney Docket No. 05542/172002	:	
	:	

This is in response to the "PETITION TO ADD INADVERTENTNLY OMITTED MATERIAL UNDER 37 C.F.R. §1.57(A)" filed on August 20, 2008, requesting that the above-referenced application be accorded a filing date of March 18, 2008.

The petition is **DISMISSED**.

Application papers in the above-identified application were deposited on March 18, 2008. On June 23, 2008, the Office of Patent Application Processing mailed applicants a "Notice of Incomplete Nonprovisional Application," notifying applicants that the application papers had not been accorded a filing date because the application was deposited without drawings. In response, applicants timely filed this petition with drawings. Applicants request that the application be amended to include the inadvertently omitted drawings on the basis that the drawings were filed in Provisional Application 60/896,635, filed March 23, 2007, from which the instant application claims priority.

However, the drawings submitted with this petition were not in the form of an amendment under 37 CFR 1.121(d). Accordingly, the requested filing date will not be given to this application until this requirements is satisfied.

Telephone inquiries concerning this matter may be directed to Carl Friedman at (571) 272-6842.

David Bucci
Petitions Examiner
Office of Petitions

UNITED STATES PATENT AND TRADEMARK OFFICE

Commissioner for Patents
United States Patent and Trademark Office
P.O. Box 1450
Alexandria, VA 22313-1450
www.uspto.gov

OSHA LIANG/MI
TWO HOUSTON CENTER
909 FANNIN STREET, SUITE 3500
HOUSTON TX 77010

COPY MAILED

FEB 13 2009

OFFICE OF PETITIONS

In re Application of
Gary E. Fout et al.
Application No. 12/050,796
Deposited: March 18, 2008
Attorney Docket No. 05542/172002

ON PETITION

This is in response to the "PETITION TO ADD INADVERTENTLY OMITTED MATERIAL UNDER 37 C.F.R. §1.121(d)" filed November 25, 2008, requesting that the above-referenced application be accorded a filing date of March 18, 2008. This petition is being treated pursuant to 37 CFR 1.53(e)(2)[1].

A petition decision mailed October 27, 2008 dismissed the "PETITION TO ADD ADVERTENTLY OMITTED MATERIAL UNDER 37 C.F.R. §1.57(a)" filed August 20, 2008 for failure to provide drawings in proper form as an amendment under 37 CFR 1.121(d). The instant petition was submitted in response thereto.

Application papers in the above-identified application were deposited on March 18, 2008. However, on June 23, 2008, the Office of Patent Application Processing mailed applicants a "Notice of Incomplete Nonprovisional Application," notifying applicants that the application papers had not been accorded a filing date because the application was deposited without drawings. In response, applicants timely filed this petition. Applicants request that the application be amended to include the inadvertently omitted drawings on the basis that the application as filed contained a prior benefit claim under 37 CFR 1.55 or 1.78.

Petitioner notes that drawings are not considered essential for a filing date in applications that contain at least one method claim. A review of the application confirms that, as filed, the application contained at least one method claim. MPEP 601.01(f) provides that:

> It has been USPTO practice to treat an application that contains at least one process or method claim as an application for which a drawing is not necessary for an understanding of the invention under 35 U.S.C. 113 (first sentence).

[1] Any request for review of a notification pursuant to paragraph (e)(1) of this section, or a notification that the original application papers lack a portion of the specification or drawing(s), must be by way of a petition pursuant to this paragraph accompanied by the fee set forth in § 1.17(f). In the absence of a timely (§ 1.181(f)) petition pursuant to this paragraph, the filing date of an application in which the applicant was notified of a filing error pursuant to paragraph (e)(1) of this section will be the date the filing error is corrected.

Thus, pursuant to § 601.01(f), a drawing is not considered essential for a filing date. The instant application is entitled to a filing date without drawings present in the application.

Accordingly, the Office should have granted the application a filing date and mailed a Notice of Omitted Items instead of a Notice of Incomplete Nonprovisional Application. As stated in MPEP 601.01(g) under the section entitled, "Application Entitled to a Filing Date," applicant may submit an amendment to include the inadvertently omitted portion of the drawing(s) pursuant to 37 CFR 1.57(a):

> [i]f an application was filed on or after September 21, 2004, and contains a claim under 37 CFR 1.55 for priority of a prior-filed foreign application, or a claim under 37 CFR 1.78 for the benefit of a prior-filed provisional, nonprovisional, or international application that was present on the filing date of the application, and the omitted portion of the drawing(s) was inadvertently omitted from the application and is completely contained in the prior-filed application[.]

Please note that no petition is required and that the amendment must comply with 37 CFR 1.57(a) and 37 CFR 1.121. See MPEP § 201.17. Any amendment to include the inadvertently omitted drawing(s) will be considered by the examiner.

To the extent the instant petition requests a filing date of March 18, 2008 with no drawings present in the application, the petition is **GRANTED**.

Given the basis for granting this petition, the petition fee is being refunded.

Pursuant to this decision, the application will be referred to Office of Patent Application Processing for:

- **correction of the filing date to March 18, 2008**;
- **for indication in Office records, as appropriate, that "0" sheets of drawings were present on filing** and
- **for issuance of a filing receipt.**

Entry of the amendment filed November 25, 2008 will be determined by the examiner.

Telephone inquiries concerning this matter may be directed to Carl Friedman at (571) 272-6842.

David Bucci
Petitions Examiner
Office of Petitions

UNITED STATES PATENT AND TRADEMARK OFFICE

COMMISSIONER FOR PATENTS
UNITED STATES PATENT AND TRADEMARK OFFICE
P.O. BOX 1450
ALEXANDRIA, VA 22313-1450
www.uspto.gov

OCCHIUTI ROHLICEK & TSAO, LLP
10 FAWCETT STREET
CAMBRIDGE MA 02138

MAILED
MAY 21 2009
OFFICE OF PETITIONS

Applicant: Kumar
Appl. No.: 12/050,828
Filing Date: March 18, 2008
Title: METHODS AND SYSTEMS FOR PERFORMING A CLINICAL ASSESSMENT
Attorney Docket No.: 39902-002001
Pub. No.: US 2008/0234558 A1
Pub. Date: September 25, 2008

This is a decision on the request for a corrected patent application publication under 37 CFR 1.221(b), received on November 25, 2008, for the above-identified application.

The request is DISMISSED.

Applicant requests that the application be republished because the patent application publication contains material errors in the specification in several equations, wherein the subscripts, symbols and superscripts are missing or are incorrect.

37 CFR 1.221(b) is applicable "only when the Office makes a material mistake which is apparent from Office records. Any request for a corrected or revised patent application publication other than as provided in paragraph (a) of this section must be filed within two months from the date of the patent application publication. This period is not extendable." A material mistake must affect the public's ability to appreciate the technical disclosure of the patent application publication, to determine the scope of the patent application publication, or to determine the scope of the provisional rights that an applicant may seek to enforce upon issuance of a patent. [1]

The errors in the equations noted by requestor in the specification are not material Office errors under 37 CFR 1.221. The text was not printed correctly due to the quality of the text. The errors noted by requestor in the equations in this published application are due to the quality of the text, as the equations and some of the text is printed in small font and are faint. The quality of some of the text is poor, which makes it difficult to electronically reproduce by digital imaging and optical character recognition. See 37 CFR 1.52 and PCT Rule 11.9(d)(1).

Applicant is advised that he may want to file application papers that are clearer, as the errors are due to the quality of the text. The text with respect to the formula is very small, which makes it

[1] Changes to Implement Eighteen-Month Publication of Patent Applications, 65 FR 57023, 57038 (Sept. 20, 2000), 1239, Off. Gaz. Pat. Office Notices 63, 75 (Oct. 10, 2000) (final rule).

difficult to read and to electronically reproduce by digital imaging and optical character recognition. Applicants have been advised to file applications having cleaner and larger text with sufficient clarity and contrast to permit reproduction, such as electronic reproduction by digital imaging and optical character recognition, which will avoid errors in the patent application publication process. See 37 CFR 1.52 and PCT Rule 11.9(d)(1).

It would greatly benefit the Office if **applicant did not provide copies of papers**, which were previously submitted or **a complete copy of the pre-grant publication**, as it unnecessarily increases the cost to the Office. See 37 CFR 1.4(b). A request for corrected publication need only point out what was printed incorrectly in the application, where the error occurs in the publication and where the correct text or drawing is found in the application papers. Marked up relevant copies of the applications papers and the pre-grant publication may facilitate processing of the request, where it is not readily apparent where the error occurs. If it is not clear why the error is a material error, further explanation may be warranted.

The applicant is advised that a "request for republication of an application previously published" may be filed under 37 CFR 1.221(a). Such a request for republication "must include a copy of the application compliance with the Office's electronic filing system requirements and be accompanied by the publication fee set forth in § 1.18(d) and the processing fee set forth in § 1.17(i)." If the request for republication does not comply with the electronic filing system requirements, the republication will not take place and the publication fee set forth in § 1.18(d) will be refunded. The processing fee will be retained.

A guide for filing a request for a Pre-Grant Publication, such as a request for republication may be found on the link below:

http://www.uspto.gov/ebc/portal/tutorials.htm

Any request for republication under 37 CFR 1.221(a) must be submitted via the EFS system as a "Pre-Grant Publication" and any questions or request for reconsideration of the decision should be addressed as follows:

By mail to: Mail Stop PGPUB
Commissioner for Patents
P.O. Box 1450
Alexandria, Va. 22313-1450

Inquiries relating to this matter may be directed to Mark Polutta at (571) 272-7709.

Mark Polutta
Senior Legal Advisor
Office of Patent Legal Administration
Office of the Deputy Commissioner
for Patent Examination Policy

UNITED STATES PATENT AND TRADEMARK OFFICE

UNITED STATES DEPARTMENT OF COMMERCE
United States Patent and Trademark Office
Address: COMMISSIONER FOR PATENTS
P.O. Box 1450
Alexandria, Virginia 22313-1450
www.uspto.gov

APPLICATION NO.	FILING DATE	FIRST NAMED INVENTOR	ATTORNEY DOCKET NO.	CONFIRMATION NO.
12/050,839	03/18/2008	Yusuke Doi	430.0082USU	9419

7590 07/16/2009
Charles N.J. Ruggiero, Esq.
Ohlandt, Greeley, Ruggiero & Perie, L.L.P.
10th Floor
One Landmark Square
Stamford, CT 06901-2682

EXAMINER
ARAQUE JR, GERARDO

ART UNIT	PAPER NUMBER
3689	

MAIL DATE	DELIVERY MODE
07/16/2009	PAPER

DECISION GRANTING PETITION UNDER 37 CFR 1.138(d)

The declaration of express abandonment is recognized

This is in response to the petition under 37 CFR 1.138(d), requesting for a refund of any previously paid search fee and excess claims fee in the above-identified application.

The petition is granted.

The express abandonment is recognized. Any previously paid search fee and excess claims fee are hereby refunded.

Telephone inquiries should be directed to the Office of Data Management at (571) 272-4200.

Patent Publication Branch
Office of Data Management

Adjustment Date: 07/16/2009 BPOWELL
03/18/2008 INTEFSW 00003670 010467 12050839
02 FC:1111 510.00 CR

Adjustment date: 07/16/2009 BPOWELL 12050839
03/18/2008 INTEFSW 00003670 010467
02 FC:1111 510.00 CR

FORM PET651G (Rev. 08/07)

UNITED STATES PATENT AND TRADEMARK OFFICE

Commissioner for Patents
United States Patent and Trademark Office
P.O. Box 1450
Alexandria, VA 22313-1450
www.uspto.gov

MCCARTER & ENGLISH LLP
CITYPLACE 1
185 ASYLUM STREET
HARTFORD CT 06103

COPY MAILED

SEP 2 9 2008

OFFICE OF PETITIONS

In re Application of	:	
Charles M. O'Keefe et al	:	
Application No.12/050,844	:	DECISION ON PETITION
Filed: March 18, 2008	:	
Attorney Docket No. 97309.00180	:	

This is a decision on the petition under 37 CFR 1.182, filedApril 11, 2008, to change the order of the names of the inventors.

The petition is **GRANTED**.

Office records have been corrected to reflect the change in the order of the named inventors. A corrected Filing Receipt, which sets forth the desired order of the named inventors, accompanies this decision on petition.

As authorized, the $400 fee for the petition under 37 CFR 1.182 has been assessed to petitioner's deposit account.

This application is being referred to Technology Center AU 3722 for examination in due course.

Telephone inquiries regarding this decision should be directed to the undersigned at (571) 272-

Karen Creasy

Karen Creasy
Petitions Examiner
Office of Petitions

ATTACHMENT: Corrected Filing Receipt

UNITED STATES PATENT AND TRADEMARK OFFICE

UNITED STATES DEPARTMENT OF COMMERCE
United States Patent and Trademark Office
Address: COMMISSIONER FOR PATENTS
P.O. Box 1450
Alexandria, Virginia 22313-1450
www.uspto.gov

APPLICATION NUMBER	FILING or 371(c) DATE	GRP ART UNIT	FIL FEE REC'D	ATTY.DOCKET.NO	TOT CLAIMS	IND CLAIMS
12/050,844	03/18/2008	3722	2100	97309.00180	33	5

CONFIRMATION NO. 9425

CORRECTED FILING RECEIPT

21832
MCCARTER & ENGLISH LLP
CITYPLACE I
185 ASYLUM STREET
HARTFORD, CT 06103

OC000000032327855

Date Mailed: 09/29/2008

Receipt is acknowledged of this non-provisional patent application. The application will be taken up for examination in due course. Applicant will be notified as to the results of the examination. Any correspondence concerning the application must include the following identification information: the U.S. APPLICATION NUMBER, FILING DATE, NAME OF APPLICANT, and TITLE OF INVENTION. Fees transmitted by check or draft are subject to collection. Please verify the accuracy of the data presented on this receipt. **If an error is noted on this Filing Receipt, please submit a written request for a Filing Receipt Correction. Please provide a copy of this Filing Receipt with the changes noted thereon. If you received a "Notice to File Missing Parts" for this application, please submit any corrections to this Filing Receipt with your reply to the Notice. When the USPTO processes the reply to the Notice, the USPTO will generate another Filing Receipt incorporating the requested corrections**

Applicant(s)

James E. Pangerc, East Longmeadow, MA;
Charles M. O'Keefe, Monson, MA;

Assignment For Published Patent Application

Irwin Industrial Tool Company

Power of Attorney: The patent practitioners associated with Customer Number 21832

Domestic Priority data as claimed by applicant

Foreign Applications

If Required, Foreign Filing License Granted: 03/26/2008

The country code and number of your priority application, to be used for filing abroad under the Paris Convention, is **US 12/050,844**

Projected Publication Date: 09/24/2009

Non-Publication Request: No

Early Publication Request: No

Title

Quick Change Arbor, Hole Cutter, and Method

Preliminary Class

408

PROTECTING YOUR INVENTION OUTSIDE THE UNITED STATES

Since the rights granted by a U.S. patent extend only throughout the territory of the United States and have no effect in a foreign country, an inventor who wishes patent protection in another country must apply for a patent in a specific country or in regional patent offices. Applicants may wish to consider the filing of an international application under the Patent Cooperation Treaty (PCT). An international (PCT) application generally has the same effect as a regular national patent application in each PCT-member country. The PCT process **simplifies** the filing of patent applications on the same invention in member countries, but **does not result** in a grant of "an international patent" and does not eliminate the need of applicants to file additional documents and fees in countries where patent protection is desired.

Almost every country has its own patent law, and a person desiring a patent in a particular country must make an application for patent in that country in accordance with its particular laws. Since the laws of many countries differ in various respects from the patent law of the United States, applicants are advised to seek guidance from specific foreign countries to ensure that patent rights are not lost prematurely.

Applicants also are advised that in the case of inventions made in the United States, the Director of the USPTO must issue a license before applicants can apply for a patent in a foreign country. The filing of a U.S. patent application serves as a request for a foreign filing license. The application's filing receipt contains further information and guidance as to the status of applicant's license for foreign filing.

Applicants may wish to consult the USPTO booklet, "General Information Concerning Patents" (specifically, the section entitled "Treaties and Foreign Patents") for more information on timeframes and deadlines for filing foreign patent applications. The guide is available either by contacting the USPTO Contact Center at 800-786-9199, or it can be viewed on the USPTO website at http://www.uspto.gov/web/offices/pac/doc/general/index.html.

For information on preventing theft of your intellectual property (patents, trademarks and copyrights), you may wish to consult the U.S. Government website, http://www.stopfakes.gov. Part of a Department of Commerce initiative, this website includes self-help "toolkits" giving innovators guidance on how to protect intellectual property in specific countries such as China, Korea and Mexico. For questions regarding patent enforcement issues, applicants may call the U.S. Government hotline at 1-866-999-HALT (1-866-999-4158).

LICENSE FOR FOREIGN FILING UNDER

Title 35, United States Code, Section 184

Title 37, Code of Federal Regulations, 5.11 & 5.15

GRANTED

The applicant has been granted a license under 35 U.S.C. 184, if the phrase "IF REQUIRED, FOREIGN FILING LICENSE GRANTED" followed by a date appears on this form. Such licenses are issued in all applications where the conditions for issuance of a license have been met, regardless of whether or not a license may be required as

set forth in 37 CFR 5.15. The scope and limitations of this license are set forth in 37 CFR 5.15(a) unless an earlier license has been issued under 37 CFR 5.15(b). The license is subject to revocation upon written notification. The date indicated is the effective date of the license, unless an earlier license of similar scope has been granted under 37 CFR 5.13 or 5.14.

This license is to be retained by the licensee and may be used at any time on or after the effective date thereof unless it is revoked. This license is automatically transferred to any related applications(s) filed under 37 CFR 1.53(d). This license is not retroactive.

The grant of a license does not in any way lessen the responsibility of a licensee for the security of the subject matter as imposed by any Government contract or the provisions of existing laws relating to espionage and the national security or the export of technical data. Licensees should apprise themselves of current regulations especially with respect to certain countries, of other agencies, particularly the Office of Defense Trade Controls, Department of State (with respect to Arms, Munitions and Implements of War (22 CFR 121-128)); the Bureau of Industry and Security, Department of Commerce (15 CFR parts 730-774); the Office of Foreign AssetsControl, Department of Treasury (31 CFR Parts 500+) and the Department of Energy.

NOT GRANTED

No license under 35 U.S.C. 184 has been granted at this time, if the phrase "IF REQUIRED, FOREIGN FILING LICENSE GRANTED" DOES NOT appear on this form. Applicant may still petition for a license under 37 CFR 5.12, if a license is desired before the expiration of 6 months from the filing date of the application. If 6 months has lapsed from the filing date of this application and the licensee has not received any indication of a secrecy order under 35 U.S.C. 181, the licensee may foreign file the application pursuant to 37 CFR 5.15(b).

UNITED STATES PATENT AND TRADEMARK OFFICE

Commissioner for Patents
United States Patent and Trademark Office
P.O. Box 1450
Alexandria, VA 22313-1450
www.uspto.gov

Nixon Peabody, LLP
401 9th Street, NW
Suite 900
Washington, DC 20004-2128

MAILED

OCT 23 2009

OFFICE OF PETITIONS

In re Application of	:	
Philip Patti	:	
Application No. 12/050,881	:	DECISION ON PETITION
Filed: March 18, 2008	:	TO WITHDRAW
Attorney Docket No. 039610-003000	:	FROM RECORD
	:	

This is a decision on the Request to Withdraw as attorney or agent of record under 37 C.F.R. § 1.36(b), filed May 13, 2009.

The request is **APPROVED**.

A grantable request to withdraw as attorney/agent of record must be signed by every attorney/agent seeking to withdraw or contain a clear indication that one attorney is signing on behalf of another/others. A request to withdraw will not be approved unless at least 30 (thirty) days would remain between the date of approval and the later of the expiration date of a time to file a response or the expiration date of the maximum time period which can be extended under 37 C.F.R. § 1.136(a).

The request was signed by Donald L. Bartels on behalf of all attorneys/agents associated with customer number 22204. All attorneys/agents associated with customer number 22204 have been withdrawn.

Applicant is reminded that there is no attorney of record at this time.

All future correspondence will be directed to inventor. The address is copied below.

Telephone inquiries concerning this decision should be directed to Kimberly Inabinet at 571-272-4618.

Kimberly Inabinet
Petitions Examiner
Office of Petitions

cc: Philip Patti
3230 Riverside Avenue, Suite 110A
Paso Robles, CA 93446

UNITED STATES PATENT AND TRADEMARK OFFICE

UNITED STATES DEPARTMENT OF COMMERCE
United States Patent and Trademark Office
Address: COMMISSIONER FOR PATENTS
P.O. Box 1450
Alexandria, Virginia 22313-1450
www.uspto.gov

APPLICATION NUMBER	FILING OR 371(C) DATE	FIRST NAMED APPLICANT	ATTY. DOCKET NO./TITLE
12/050,881	03/18/2008	Philip Patti	039610-003000

CONFIRMATION NO. 9492

POWER OF ATTORNEY NOTICE

22204
NIXON PEABODY, LLP
401 9TH STREET, NW
SUITE 900
WASHINGTON, DC 20004-2128

OC000000038425437

Date Mailed: 10/22/2009

NOTICE REGARDING CHANGE OF POWER OF ATTORNEY

This is in response to the Power of Attorney filed 05/13/2009.

- The withdrawal as attorney in this application has been accepted. Future correspondence will be mailed to the new address of record. 37 CFR 1.33.

/kainabinet/

Office of Data Management, Application Assistance Unit (571) 272-4000, or (571) 272-4200, or 1-888-786-0101

UNITED STATES PATENT AND TRADEMARK OFFICE

Commissioner for Patents
United States Patent and Trademark Office
P.O. Box 1450
Alexandria, VA 22313-1450
www.uspto.gov

DICKINSON WRIGHT PLLC
38525 WOODWARD AVENUE
SUITE 2000
BLOOMFIELD HILLS MI 48304-2970

MAILED

APR 0 8 2009

OFFICE OF PETITIONS

In re Application of	:	
Jean-Christophe Ehrstrom et al	:	
Application No. 12/050,888	:	DECISION ON PETITION
Filed: March 18, 2008	:	
Attorney Docket No. A240 1290.1	:	

This is a decision on the petition under the unintentional provisions of 37 CFR 1.137(b), filed December 30, 2008, to revive the above-identified application.

The petition is **GRANTED**.

The petition satisfies the conditions for revival pursuant to the provisions of 37 CFR 1.137(b) in that (1) the reply in the form of an executed declaration/surcharge fee; (2) the petition fee; and (3) the required statement of unintentional delay have been received. Accordingly, the reply to the notice mailed April 1, 2008, is accepted as having been unintentionally delayed.

Telephone inquiries concerning this decision should be directed to the undersigned at (571) 272-3208.

This application is being referred to the Office of Patent Application Processing for pre-examination processing.

Karen Creasy

Karen Creasy
Petitions Examiner
Office of Petitions

UNITED STATES PATENT AND TRADEMARK OFFICE

UNITED STATES DEPARTMENT OF COMMERCE
United States Patent and Trademark Office
Address: COMMISSIONER FOR PATENTS
P.O. Box 1450
Alexandria, Virginia 22313-1450
www.uspto.gov

APPLICATION NO.	FILING DATE	FIRST NAMED INVENTOR	ATTORNEY DOCKET NO.	CONFIRMATION NO.
12/051,088	03/19/2008	RYOICHI TACHIBANA	430.0075USU	9887

7590 09/08/2009
Charles N.J. Ruggiero, Esq.
Ohlandt , Greeley, Ruggiero & Perle, L.L.P.
10th Floor
One Landmark Square
Stamford, CT 06901-2682

EXAMINER
ANDERSON, MATTHEW D

ART UNIT	PAPER NUMBER
2618	

MAIL DATE	DELIVERY MODE
09/08/2009	PAPER

DECISION GRANTING PETITION UNDER 37 CFR 1.138(d)

The declaration of express abandonment is recognized

This is in response to the petition under 37 CFR 1.138(d), requesting for a refund of any previously paid search fee and excess claims fee in the above-identified application.

The petition is granted.

The express abandonment is recognized. Any previously paid search fee and excess claims fee are hereby refunded.

Telephone inquiries should be directed to the Office of Data Management at (571) 272-4200.

Nimi Farmer

Patent Publication Branch
Office of Data Management

Adjustment date: 09/08/2009 NFARMER
03/19/2008 INTEFSW 00008117 010467 12051088
02 FC:1111 510.00 CR

FORM PET651G (Rev. 08/07)

UNITED STATES PATENT AND TRADEMARK OFFICE

Commissioner for Patents
United States Patent and Trademark Office
P.O. Box 1450
Alexandria, VA 22313-1450
www.uspto.gov

SCHWEGMAN, LUNDBERG & WOESSNER, P.A.
P.O. BOX 2938
MINNEAPOLIS, MN 55402

COPY MAILED
MAR 19 2010

In re Application of :
John David Terry :
Application No.: 12/051,109 : ON PETITION
Filed: March 19, 2008 :
Attorney Docket No.: 1899.003US3 :

This is a decision on the petition, filed March 17, 2010, under 37 CFR 1.313(c)(2) to withdraw the above-identified application from issue after payment of the issue fee.

The petition is **GRANTED**.

The above-identified application is withdrawn from issue for consideration of a submission under 37 CFR 1.114 (request for continued examination). See 37 CFR 1.313(c)(2).

Petitioner is advised that the issue fee paid on February 1, 2010, cannot be refunded. If, however, this application is again allowed, petitioner may request that it be applied towards the issue fee required by the new Notice of Allowance.[1]

Telephone inquiries relating to this decision should be directed to the undersigned at (571) 272-3204.

The application is being referred to Technology Center AU 2821 for further processing of the request for continued examination under 37 CFR 1.114 and for consideration of the concurrently filed Information Disclosure Statement (IDS).

/SDB/

Sherry D. Brinkley
Petitions Examiner
Office of Petitions

[1] *The request to apply the issue fee to the new Notice may be satisfied by completing and returning the new Part B – Fee(s) Transmittal Form (along with any balance due at the time of submission). Petitioner is advised that the Issue Fee Transmittal Form must be completed and timely submitted to avoid abandonment of the application.*

UNITED STATES PATENT AND TRADEMARK OFFICE

COMMISSIONER FOR PATENTS
UNITED STATES PATENT AND TRADEMARK OFFICE
P.O. BOX 1450
ALEXANDRIA, VA 22313-1450
WWW.USPTO.GOV

Paper No.

Baker Botts L.L.P.
attention of: Paul N. Katz
One Shell Plaza
910 Louisiana Street
Houston TX 77002-4995

COPY MAILED

JUN 19 2008

OFFICE OF PETITIONS

In re Application of Igor Wojewoda, Gaurang Kavaiya, and Tim Phoenix Application No. 12/051,170 Filed: March 19, 2008 Attorney Docket No. 068354.1831 Title: ANALOG-TO-DIGITAL CONVERTER OFFSET AND GAIN CALIBRATION USING INTERNAL VOLTAGE REFERENCES	DECISION ON PETITION PURSUANT TO 37 C.F.R. § 1.47(A)

This is in response to the petition pursuant to 37 C.F.R. § 1.47(a), filed April 28, 2008.

This petition is **DISMISSED**.

On March 19, 2008, this application was filed, identifying Igor Wojewoda, Gaurang Kavaiya, and Tim Phoenix as joint inventors. The application was deposited without a fully executed oath or declaration (Mr. Kavaiya did not execute the declaration). On April 1, 2008, a "Notice to File Missing Parts of Nonprovisional Application - Filing Date Granted" (Notice) was mailed, requiring, *inter alia*, a fully executed oath or declaration and the associated surcharge. This Notice set a two-month period for reply.

Along with this petition, Petitioner has submitted, *inter alia*, a copy of the preveniently submitted declaration which has been

executed by each of the joint inventors save Mr. Kavaiya along with the surcharge associated with the late submission of the same, a statement of facts, the petition fee, the last known address of the non-signing inventor, and copies of tracking reports from Federal Express.

A grantable petition pursuant to 37 C.F.R. § 1.47(a) requires:

(1) the petition fee of $200;
(2) a surcharge of either $65 or $130 if the petition is not filed at the time of filing the application, as set forth in 37 C.F.R. § 1.16(e);
(3) a statement of the last known address of the non-signing inventors;
(4) either
  a) proof that a copy of the entire application (specification, claims, drawings, and the oath or declaration) was sent or given to the non-signing inventor for review and proof that the non-signing inventor refuses to join in the application or
  b) proof that the non-signing inventor cannot be found or reached after diligent effort, and;
(5) a declaration which complies with 37 C.F.R. § 1.63.

The petition has met requirements (1) - (3) and (5) of Rule 1.47(a).

Regarding the fourth requirement of Rule 1.47(a), Petitioner has asserted that the non-singing inventor no longer resides at the last-known address, and "his whereabouts remain unknown…[1]" However, Petitioner has not submitted adequate proof that diligent efforts have been made to locate the non-signing inventor. *As Petitioner has set forth that the non-signing joint inventor cannot be found or reached, Petitioner is required to establish that a diligent effort was made to locate the non-signing inventor.* The petition appears to be silent as to any search that was performed for Mr. Kavaiya. There is no indication that the Rule 47 applicant attempted to verify the address of the non-signing inventor or to determine his forwarding address, and to send <u>the complete application papers</u>

1 Petition, page 3, numbered paragraph 3.

to that address for consideration by the inventor[2]. Petitioner must provide a showing detailing the attempts that were made to obtain a forwarding address or to locate the non-signing inventor by means such as through E-mail, telephone, or the Internet. If this search is sufficiently broad so as to provide a reasonable chance at locating this individual, and it is then averred that such attempts failed, then Petitioner will have provided the necessary proof required under 37 C.F.R. § 1.47 that the non-signing inventor cannot be reached. Details of the efforts to locate the non-signing inventor should be set forth in an affidavit or declaration of facts by a person with first hand knowledge of the details.

It is noted in passing that although the declaration contains the language "material to the examination of this application," this declaration is acceptable due to the fact that it was filed prevenient to June 1, 2008[3]. Any declaration that is submitted in response to this decision must "include the language expressly set forth in 37 CFR 1.63, including that in 37 CFR 1.63(b)(3)[4]."

Any reply must be submitted within **TWO MONTHS** from the mail date of this decision. Extensions of time under 37 C.F.R. § 1.136(a) are permitted. The reply should include a cover letter entitled "Renewed Petition pursuant to 37 C.F.R. § 1.47(a)". This is not a final agency action within the meaning of 5 U.S.C § 704.

The renewed petition should indicate in a prominent manner that the attorney handling this matter is Paul Shanoski, and may be submitted by mail[5], hand-delivery[6], or facsimile[7].

If responding by mail, Petitioner is advised not to place the undersigned's name on the envelope. Only the information that appears in the footnote should be included - adding anything else to the address will delay the delivery of the response to the undersigned.

---

2 See MPEP § 409.03(d).
3 See 1327 *Official Gazette* 112 (February 12, 2008).
4 Id.
5 Mail Stop Petition, Commissioner for Patents, United States Patent and Trademark Office, P.O. Box 1450, Alexandria, VA, 22313-1450.
6 Customer Window, Randolph Building, 401 Dulaney Street, Alexandria, VA, 22314.
7 (571) 273-8300- please note this is a central facsimile number.

Telephone inquiries regarding *this decision* should be directed to the undersigned at (571) 272-3225[8].

/Paul Shanoski/
Paul Shanoski
Senior Attorney
Office of Petitions

---

8 Petitioner will note that all practice before the Office should be in writing, and the action of the Office will be based exclusively on the written record in the Office. See 37 C.F.R. § 1.2. As such, Petitioner is reminded that no telephone discussion may be controlling or considered authority for any further action(s) of Petitioner.

UNITED STATES PATENT AND TRADEMARK OFFICE

UNDER SECRETARY OF COMMERCE FOR INTELLECTUAL PROPERTY AND
DIRECTOR OF THE UNITED STATES PATENT AND TRADEMARK OFFICE
WASHINGTON, DC 20231
www.uspto.gov

APR 16 2009

BIRCH STEWART KOLASCH & BIRCH
PO BOX 747
FALLS CHURCH VA 22040-0747

In re application of	:	DECISION ON REQUEST TO
Masanori Shintani et al.	:	PARTICIPATE IN PATENT
Application No. 12/051,236	:	PROSECUTION HIGHWAY
Filed: March 19, 2008	:	PROGRAM AND PETITION
For: TRANSMISSION	:	TO MAKE SPECIAL UNDER
	:	37 CFR 1.102(d)

This is a decision on the request to participate in the Patent Prosecution Highway (PPH) program and the petition under 37 CFR 1.102(d), filed April 14, 2009, to make the above-identified application special.

The request and petition are **GRANTED**.

A grantable request to participate in the PPH pilot program and petition to make special require:

(1) The U.S. application must validly claim priority under 35 U.S.C. 119(a) to one or more applications filed in the JPO;
(2) Applicant must submit a copy of the allowable/patentable claim(s) from the JPO application(s) along with an English translation thereof and a statement that the English translation is accurate;
(3) All the claims in the U.S. application must sufficiently correspond or be amended to sufficiently correspond to the allowable/patentable claim(s) in the JPO application(s);
(4) Examination of the U.S. application has not begun;
(5) Applicant must submit a copy of all the Office actions from each of the JPO application(s) containing the allowable/patentable claim(s) along with an English translation thereof and a statement that the English translation is accurate;
(6) Applicant must submit an IDS listing the documents cited by the JPO examiner in the JPO Office action along with copies of documents except U.S. patents or U.S. patent application publications; and
(7) The required petition fee under 37 CFR 1.17(h).

In light of the preliminary amendment and the IDS filed April 14, 2009 with the petition, the request to participate in the PPH program complies with the above requirements. Therefore, the above-identified application has been accorded "special" status.

Telephone inquires concerning this decision should be directed to Teri P. Luu at 571-272-7045. All other inquiries concerning the examination or status of the application should be directed to the Patent Application Information Retrieval (PAIR) system.

The application is being forwarded to the examiner for action on the merits commensurate with this decision.

Teri P. Luu
Quality Assurance Specialist
Technology Center 3600

tpl: 04/15/09

UNITED STATES PATENT AND TRADEMARK OFFICE

UNDER SECRETARY OF COMMERCE FOR INTELLECTUAL PROPERTY AND
DIRECTOR OF THE UNITED STATES PATENT AND TRADEMARK OFFICE
WASHINGTON, DC 20231
www.uspto.gov

APR 16 2009

BIRCH STEWART KOLASCH & BIRCH
PO BOX 747
FALLS CHURCH VA 22040-0747

In re application of	:	DECISION ON REQUEST TO
Masanori Shintani	:	PARTICIPATE IN PATENT
Application No. 12/051,243	:	PROSECUTION HIGHWAY
Filed: March 19, 2008	:	PROGRAM AND PETITION
For: TRANSMISSION	:	TO MAKE SPECIAL UNDER
	:	37 CFR 1.102(d)

This is a decision on the request to participate in the Patent Prosecution Highway (PPH) program and the petition under 37 CFR 1.102(d), filed April 14, 2009, to make the above-identified application special.

The request and petition are **GRANTED**.

A grantable request to participate in the PPH pilot program and petition to make special require:

(1) The U.S. application must validly claim priority under 35 U.S.C. 119(a) to one or more applications filed in the JPO;
(2) Applicant must submit a copy of the allowable/patentable claim(s) from the JPO application(s) along with an English translation thereof and a statement that the English translation is accurate;
(3) All the claims in the U.S. application must sufficiently correspond or be amended to sufficiently correspond to the allowable/patentable claim(s) in the JPO application(s);
(4) Examination of the U.S. application has not begun;
(5) Applicant must submit a copy of all the Office actions from each of the JPO application(s) containing the allowable/patentable claim(s) along with an English translation thereof and a statement that the English translation is accurate;
(6) Applicant must submit an IDS listing the documents cited by the JPO examiner in the JPO Office action along with copies of documents except U.S. patents or U.S. patent application publications; and
(7) The required petition fee under 37 CFR 1.17(h).

In light of the preliminary amendment and the IDS filed April 14, 2009 with the petition, the request to participate in the PPH program complies with the above requirements. Therefore, the above-identified application has been accorded "special" status.

Telephone inquires concerning this decision should be directed to Teri P. Luu at 571-272-7045. All other inquiries concerning the examination or status of the application should be directed to the Patent Application Information Retrieval (PAIR) system.

The application is being forwarded to the examiner for action on the merits commensurate with this decision.

Teri P. Luu
Quality Assurance Specialist
Technology Center 3600

tpl: 04/15/09

UNITED STATES PATENT AND TRADEMARK OFFICE

UNDER SECRETARY OF COMMERCE FOR INTELLECTUAL PROPERTY AND
DIRECTOR OF THE UNITED STATES PATENT AND TRADEMARK OFFICE
WASHINGTON, DC 20231
www.uspto.gov

APR 16 2009

BIRCH STEWART KOLASCH & BIRCH
PO BOX 747
FALLS CHURCH VA 22040-0747

In re application of	:	DECISION ON REQUEST TO
Masanori Shintani et al.	:	PARTICIPATE IN PATENT
Application No. 12/051,247	:	PROSECUTION HIGHWAY
Filed: March 19, 2008	:	PROGRAM AND PETITION
For: TRANSMISSION	:	TO MAKE SPECIAL UNDER
	:	37 CFR 1.102(d)

This is a decision on the request to participate in the Patent Prosecution Highway (PPH) program and the petition under 37 CFR 1.102(d), filed April 14, 2009, to make the above-identified application special.

The request and petition are **GRANTED**.

A grantable request to participate in the PPH pilot program and petition to make special require:

(1) The U.S. application must validly claim priority under 35 U.S.C. 119(a) to one or more applications filed in the JPO;
(2) Applicant must submit a copy of the allowable/patentable claim(s) from the JPO application(s) along with an English translation thereof and a statement that the English translation is accurate;
(3) All the claims in the U.S. application must sufficiently correspond or be amended to sufficiently correspond to the allowable/patentable claim(s) in the JPO application(s);
(4) Examination of the U.S. application has not begun;
(5) Applicant must submit a copy of all the Office actions from each of the JPO application(s) containing the allowable/patentable claim(s) along with an English translation thereof and a statement that the English translation is accurate;
(6) Applicant must submit an IDS listing the documents cited by the JPO examiner in the JPO Office action along with copies of documents except U.S. patents or U.S. patent application publications; and
(7) The required petition fee under 37 CFR 1.17(h).

In light of the preliminary amendment and the IDS filed April 14, 2009 with the petition, the request to participate in the PPH program complies with the above requirements. Therefore, the above-identified application has been accorded "special" status.

Telephone inquires concerning this decision should be directed to Teri P. Luu at 571-272-7045. All other inquiries concerning the examination or status of the application should be directed to the Patent Application Information Retrieval (PAIR) system.

The application is being forwarded to the examiner for action on the merits commensurate with this decision.

Teri P. Luu
Quality Assurance Specialist
Technology Center 3600

tpl: 04/15/09

UNITED STATES PATENT AND TRADEMARK OFFICE

Commissioner for Patents
United States Patent and Trademark Office
P.O. Box 1450
Alexandria, VA 22313-1450
www.uspto.gov

FOLEY & LARDNER LLP
150 EAST GILMAN STREET
P.O. BOX 1497
MADISON WI 53701-1497

MAILED

JUL 17 2009

OFFICE OF PETITIONS

In re Application of	:	
Smith et al.	:	DECISION ON PETITION
Application No. 12/051,281	:	TO WITHDRAW
Filed: March 19, 2008	:	FROM RECORD
Attorney Docket No. 074489-0114	:	

This is a decision on the Request to Withdraw as attorney or agent of record under 37 C.F.R. § 1.36(b), filed June 3, 2009.

The request is **NOT APPROVED**.

The Office strongly encourages practitioner(s) requesting withdrawal from representation as practitioner of record in an application to review the record to determine whether he or she is, in fact, of record and how he or she was made of record. For example, the practitioner(s) should determine whether he or she was appointed by naming each practitioner individually or through the use of a Customer Number. If the practitioner(s) was appointed by a specific designation, then the Request should ask that each specified practitioner be withdrawn and should list each practitioner(s) in the Request.

In the instant application, the practitioners were appointed by a specific designation on the original Oath/Declaration and not via Customer Number. Therefore, requesting to withdraw via Customer Number is not the appropriate course.

All future communications from the Office will be directed to above-listed address until otherwise properly notified by the applicant or a proper change of correspondence address have been submitted.

The instant application is currently awaiting examination in Technology Center AU 3626.

Telephone inquires concerning this decision should be directed to the undersigned at (571) 272-3206. All other inquires concerning either the examination or status of the application should be directed to the Technology Center.

Liana Walsh
Petitions Examiner
Office of Petitions

UNITED STATES PATENT AND TRADEMARK OFFICE

UNITED STATES DEPARTMENT OF COMMERCE
United States Patent and Trademark Office
Address: COMMISSIONER FOR PATENTS
P.O. Box 1450
Alexandria, Virginia 22313-1450
www.uspto.gov

TEXAS INSTRUMENTS INCORPORATED
P O BOX 655474, M/S 3999
DALLAS, TX 75265

Mail Date: 05/07/2010

Applicant	: Lixia Li	: DECISION ON REQUEST FOR
Patent Number	: 7629805	: RECALCULATION of PATENT
Issue Date	: 12/08/2009	: TERM ADJUSTMENT IN VIEW
Application No	: 12/051,300	: OF WYETH AND NOTICE OF INTENT TO
Filed	: 03/19/2008	: ISSUE CERTIFICATE OF CORRECTION
		:

The Request for Recalculation is **GRANTED** to the extent indicated.

The patent term adjustment has been determined to be **98** days. The USPTO will *sua sponte* issue a certificate of correction reflecting the amount of PTA days determined by the recalculation.

Prior to the issuance of the certificate of correction, the USPTO will afford patentee an opportunity to be heard and request reconsideration. Accordingly, patentee has **one month or thirty (30) days**, whichever is longer, to file a request for reconsideration of this patent term adjustment calculation. See 35 U.S.C. 154(b)(3)(B)(ii) and 37 CFR 1.322(a)(4). No extensions of time will be granted under 37 CFR 1.136.

Patentee should use document code PET.OP if electronically filing a request for reconsideration of this patent term adjustment calculation. The patentee must also include the information required by 37 CFR 1.705(b)(2) and the fee required by 37 CFR 1.18(e). If patentee does not file a timely request for reconsideration of this patent term adjustment calculation including the information required by 37 CFR 1.705(b)(2) and the fee required by 37 CFR 1.18(e), the USPTO will issue a certificate of correction reflecting the PTA determination noted above.

Patentee should be aware that in order to preserve the right to review in the United States District Court for the District of Columbia of the USPTO patent term adjustment determination, patentee must ensure that he or she also take the steps required under 35 U.S.C. 154(b)(4)(A) in a timely manner. Nothing in the request for recalculation should be construed as providing an alternative time frame for commencing a civil action under 35 U.S.C. 154(b)(4)(A).

Any questions concerning this decision should be directed to the Office of Patent Legal Administration at 571-272-7702.

UNITED STATES PATENT AND TRADEMARK OFFICE

Commissioner for Patents
United States Patent and Trademark Office
P.O. Box 1450
Alexandria, VA 22313-1450
www.uspto.gov

0 8 APR 2008

Duane Morris LLP
Patent Department
1540 Broadway
New York, NY 10036-4086

In re Application of WOLLESCHENSKY, Ralf U.S. Application No.: 12/051,352 Filing Date: March 19, 2008 Attorney's Docket No.:Y2846-00020 For: DEVICE AND METHOD FOR OPTICALLY SENSING A SPECIMEN WITH A LARGE DEPTH OF FIELD	DECISION

This decision is issued in response to applicant's "Petition For Correction of Filing" filed March 28, 2008. The petition, treated herein under 37 CFR 1.182, requests that the present application be treated as a U.S. National Phase of PCT/EP06/08956 filed under 35 U.S.C. 371. Deposit Account No 04-1679 will be charged the required petition fee.

BACKGROUND

On September 14, 2006, applicant filed international application PCT/EP06/08956 which claimed a priority date of September 29, 2005 and which designated the United States. The deadline for submission of the basic national fee was thirty months from the priority date, i.e., March 19, 2008.

On March 19, 2008, applicant initiated the present U.S. application by filing a "Utility Patent Application Transmittal" (Form PTO/SB/05), a declaration, an Information Disclosure Statement (IDS), and an authorization to charge Deposit Account No. 14-1679 for required fees. The Form PTO/SB/05 Transmittal Letter used by applicant specifically states that it is for use "[o]nly for new nonprovisional application under 37 CFR 1.53(b)."

On March 28, 2008, applicant filed the "Petition For Correction of Filing" considered herein. The petition states "[t]hrough error, and without deceptive intent, this application was inadvertently filed as a Utility nonprovisional application under 35 *(sic)* U.S.C. 111 instead of filing it as a National Phase under 35 U.S.C. 371." Applicant therefore requests that the March 19, 2008 submission be treated as a national stage filing under 35 U.S.C. 371.

On April 02, 2008, the United States Patent and Trademark Office mailed an Official Filing Receipt.

DISCUSSION

Any intended filing of an international application as a national stage application must clearly and unambiguously be identified as such and must satisfy all of the conditions set forth in 35 U.S.C. 371(c). See 37 CFR 1.495(g):

> The documents and fees submitted ... must be clearly identified as a submission to enter the national stage under 35 U.S.C. 371, otherwise the submission will be considered as being made under 35 U.S.C. 111.

In addition, section 1893.03(a) of the MPEP states the following:

> If there are any conflicting instructions as to whether the filing is under 35 U.S.C. 111(a) or 35 U.S.C. 371, the application will be accepted as filed under 35 U.S.C. 111(a).

As noted above, applicant's March 19, 2008 filing included Form PTO/SB/05 Transmittal letter (for use "[o]nly for new nonprovisional application under 37 CFR 1.53(b)"). The first line of the specification indicated that "[t]he present application is a U.S. National Stage application of International PCT Application Number PCT/EP06/08945 filed on September 14, 2006. . ." However, the inclusion of this transmittal letter constitutes "conflicting instructions" which, pursuant to the MPEP, requires that the application be treated under 35 U.S.C. 111(a). Accordingly, the original papers deposited on March 19, 2008 were correctly treated as a filing under 35 U.S.C. 111(a).

Since the application is being treated as a filing under 35 U.S.C. 111(a), applicants have not properly claimed benefit of the international application in accordance with 35 U.S.C. 120 and 37 CFR 1.78(a) and, the instant application cannot be considered as a continuing application of PCT/EP06/08945. In order to claim benefit under 35 U.S.C. 120 to the prior-filed PCT application at this point, applicants must file an amended specification or an Application Data Sheet. The amended specification (or Application Data Sheet) should be filed within the time period set forth in 37 CFR 1.78(a)(2)(ii).

CONCLUSION

The petition to convert the application to a filing under 35 U.S.C. 371 is **DISMISSED** without prejudice. The present application will continue to be treated as a filing under 35 U.S.C. 111(a) and 37 CFR 1.53(b).

If reconsideration on the merits of the petition is desired, a proper response must be filed within **TWO (2) MONTHS** of the mail date of the present decision. Any request for reconsideration should include a cover letter entitled "Renewed Petition Under 37 CFR 1.182."

Please direct further correspondence with respect to this petition to Mail Stop PCT, Commissioner for Patents, P.O. Box 1450, Alexandria, Virginia 22313-1450, with the contents of the letter marked to the attention of the Office of PCT Legal Administration.

The present application is being referred to the Office Of Initial Patent Examination for further processing in accordance with this decision.

Anthony Smith

Anthony Smith
Attorney-Advisor
Office of PCT Legal Administration
Tel: (571) 272-3298
Fax: (571) 273-0459

UNITED STATES PATENT AND TRADEMARK OFFICE

Commissioner for Patents
United States Patent and Trademark Office
P.O. Box 1450
Alexandria, VA 22313-1450
www.uspto.gov

BARRY W. CHAPIN, ESQ.
CHAPIN INTELLECTUAL PROPERTY LAW, LLC
WESTBOROUGH OFFICE PARK
1700 WEST PARK DRIVE, SUITE 280
WESTBOROUGH, MA 01581

COPY MAILED

DEC 10 2009

OFFICE OF PETITIONS

In re Application of
Leslie C. Bishop
Application No. 12/051,355
Filed: March 19, 2008
Attorney Docket No. INM09-03

ON PETITION

This is a decision on the petition, filed October 6, 2009, to revive the above-identified application under the provisions of 37 CFR 1.137(b).

The petition is **GRANTED**.

The application became abandoned for failure to reply in a timely manner to the Notice to File Missing Parts of Nonprovisional Application (Notice), mailed April 1, 2008. The Notice set a period for reply of two (2) months from the mail date of the Notice. No extension of time under the provisions of 37 CFR 1.136(a) was obtained. Accordingly, the application became abandoned on June 2, 2008. A Notice of Abandonment was mailed on December 4, 2008. On October 6, 2009, the present petition was filed.

The petition satisfies the requirements of 37 CFR 1.137(b) in that petitioner has supplied (1) the reply in the form of payment of basic filing fee of $82, the search fee of $270, examination fee of $110 and the surcharge of $65; (2) the petition fee of $810; and (3) an adequate statement of unintentional delay[1].

The application is being referred to the Office of Patent Application Processing (OPAP) for further processing.

Telephone inquires related to this decision should be directed to the undersigned at (571) 272-3204. Telephone inquiries related to processing at OPAP should be directed to their hotline at (571) 272-4000.

Sherry D. Brinkley
Petitions Examiner
Office of Petitions

[1] 37 CFR 1.137(b)(3) requires a statement that the entire delay in filing the required reply from the due date for the reply until the filing of a grantable petition pursuant to 37 CFR 1.137(b) was unintentional. While it is not apparent whether the person signing the statement of unintentional delay was in a position to have firsthand or direct knowledge of the facts and circumstances of the delay at issue, such statement is being treated as having been made as the result of a reasonable inquiry into the facts and circumstances of such delay. See 37 CFR 10.18(b) and Changes to Patent Practice and Procedure; Final Rule Notice, 62 Fed. Reg. 53131, 53178 (October 10, 1997), 1203 Off. Gaz. Pat. Office 63, 103 (October 21, 1997). In the event that such an inquiry has not been made, petitioner must make such an inquiry. If such inquiry results in the discovery that it is not correct that the entire delay in filing the required reply from the due date for the reply until the filing of a grantable petition pursuant to 37 CFR 1.137(b) was unintentional, petitioner must notify the Office.

UNITED STATES PATENT AND TRADEMARK OFFICE

Commissioner for Patents
United States Patent and Trademark Office
P.O. Box 1450
Alexandria, VA 22313-1450
www.uspto.gov

CHOATE, HALL & STEWART LLP/WYETH LLC
PATENT GROUP
TWO INTERNATIONAL PLACE
BOSTON, MA 02110

COPY MAILED
FEB 01 2010

In re Application of :
Gavin D. HEFFERNAN, et *al.* :
Application No. 12/051,368 :
Filed: March 19, 2008 :
Attorney Docket No. **2004658-1689 (AM102017 US)** :

DECISION ON PETITION TO WITHDRAW FROM RECORD

This is a decision on the Request to Withdraw as attorney or agent of record under 37 C.F.R. § 1.36(b), filed November 20, 2009.

The request is **NOT APPROVED**.

The request to withdraw as attorney/agent of record and change of correspondence address is hereby not accepted. Petitioner has not complied with current USPTO requirements, set forth in 37 CFR 10.40 concerning Request for Withdrawal as Attorney and Change of Correspondence Address.

Petitioner has not properly submitted a correspondence address change directing all future correspondence for the application.

The Office will only accept correspondence address changes to the most current address information provided for the assignee of the entire interest *who properly became of record under 37 CFR 3.71*, or if no assignee of the entire interest has properly been made of record, the most current address information provided for the first named inventor. 37 CFR 3.71 (c) states:

> ***An assignee becomes of record either in a national patent application or a reexamination proceeding by filing a statement in compliance with § 3.73 (b) that is signed by a party who is authorized to act on behalf of the assignee.***

The Office will also no longer change the correspondence address to that of a new practitioner unless the Request is accompanied by a power of attorney to a new practitioner (e.g., Form PTO/SB/82). All future communications from the Office will be directed to the above-listed address until otherwise properly notified by the applicant or a proper change of correspondence address has been submitted.

Telephone inquiries concerning this decision should be directed to the undersigned at 571-272- 7253.

All other inquires concerning either the examination or status of the application should be directed to the Technology Center.

/Monica A. Graves/
Petitions Examiner, Office of Petitions

UNITED STATES PATENT AND TRADEMARK OFFICE

Commissioner for Patents
United States Patent and Trademark Office
P.O. Box 1450
Alexandria, VA 22313-1450
www.uspto.gov

MAILED

MAY 24 2010

OFFICE OF PETITIONS

CHOATE, HALL & STEWART LLP/WYETH LLC
PATENT GROUP
TWO INTERNATIONAL PLACE
BOSTON MA 02110

In re Application of

Gavin D. HEFFERNAN, et *al.*
Application No. 12/051,368
Filed: March 19, 2008
Attorney Docket No. **2004658-1689 (AM102017 US**

DECISION ON PETITION TO WITHDRAW FROM RECORD

This is a decision on the renewed Request to Withdraw as attorney or agent of record under 37 C.F.R. § 1.36(b), filed May 12, 2010.

The request is **NOT APPROVED**.

The request to withdraw as attorney/agent of record and change of correspondence address is hereby not accepted. Petitioner has not complied with current USPTO requirements, set forth in 37 CFR 10.40 concerning Request for Withdrawal as Attorney and Change of Correspondence Address.

Petitioner has not properly submitted forwarding correspondence address information for the application.

The Office will only accept correspondence address changes to the most current address information provided for the assignee of the entire interest ***who properly became of record*** *under 37 CFR 3.71*, or if no assignee of the entire interest has properly been made of record, the most current address information provided for the first named inventor. 37 CFR 3.71 (c) states:

> ***An assignee becomes of record either in a national patent application or a reexamination proceeding by filing a statement in compliance with § 3.73 (b) that is signed by a party who is authorized to act on behalf of the assignee.***

The Office will also no longer change the correspondence address to that of a new practitioner unless the Request is accompanied by a power of attorney to a new practitioner (e.g., Form PTO/SB/82). All future communications from the Office will be directed to the above-listed address until otherwise properly notified by the applicant or a proper change of correspondence address has been submitted.

Telephone inquiries concerning this decision should be directed to the undersigned at 571-272- 7253. All other inquires concerning either the examination or status of the application should be directed to the Technology Center.

/Monica A. Graves/
Petitions Examiner, Office of Petitions

ATTACHMENT: STATEMENT UNDER 37 CFR 3.73(b)

PTO/SB/96 (07-09)
Approved for use through 07/31/2012. OMB 0651-0031
U.S. Patent and Trademark Office; U.S. DEPARTMENT OF COMMERCE
Under the Paperwork Reduction Act of 1995, no persons are required to respond to a collection of information unless it displays a valid OMB control number.

STATEMENT UNDER 37 CFR 3.73(b)

Applicant/Patent Owner: _____

Application No./Patent No.: _____ Filed/Issue Date: _____

Titled:

_____, a _____
(Name of Assignee) (Type of Assignee, e.g., corporation, partnership, university, government agency, etc.

states that it is:

1. ☐ the assignee of the entire right, title, and interest in;

2. ☐ an assignee of less than the entire right, title, and interest in
(The extent (by percentage) of its ownership interest is _____ %); or

3. ☐ the assignee of an undivided interest in the entirety of (a complete assignment from one of the joint inventors was made)

the patent application/patent identified above, by virtue of either:

A. ☐ An assignment from the inventor(s) of the patent application/patent identified above. The assignment was recorded in the United States Patent and Trademark Office at Reel _____, Frame _____, or for which a copy therefore is attached.

OR

B. ☐ A chain of title from the inventor(s), of the patent application/patent identified above, to the current assignee as follows:

1. From: _____ To: _____

The document was recorded in the United States Patent and Trademark Office at

Reel _____, Frame _____, or for which a copy thereof is attached.

2. From: _____ To: _____

The document was recorded in the United States Patent and Trademark Office at

Reel _____, Frame _____, or for which a copy thereof is attached.

3. From: _____ To: _____

The document was recorded in the United States Patent and Trademark Office at

Reel _____, Frame _____, or for which a copy thereof is attached.

☐ Additional documents in the chain of title are listed on a supplemental sheet(s).

☐ As required by 37 CFR 3.73(b)(1)(i), the documentary evidence of the chain of title from the original owner to the assignee was, or concurrently is being, submitted for recordation pursuant to 37 CFR 3.11.

[NOTE: A separate copy (*i.e.*, a true copy of the original assignment document(s)) must be submitted to Assignment Division in accordance with 37 CFR Part 3, to record the assignment in the records of the USPTO. See MPEP 302.08]

The undersigned (whose title is supplied below) is authorized to act on behalf of the assignee.

_____ _____
Signature Date

_____ _____
Printed or Typed Name Title

This collection of information is required by 37 CFR 3.73(b). The information is required to obtain or retain a benefit by the public which is to file (and by the USPTO to process) an application. Confidentiality is governed by 35 U.S.C. 122 and 37 CFR 1.11 and 1.14. This collection is estimated to take 12 minutes to complete, including gathering, preparing, and submitting the completed application form to the USPTO. Time will vary depending upon the individual case. Any comments on the amount of time you require to complete this form and/or suggestions for reducing this burden, should be sent to the Chief Information Officer, U.S. Patent and Trademark Office, U.S. Department of Commerce, P.O. Box 1450, Alexandria, VA 22313-1450. DO NOT SEND FEES OR COMPLETED FORMS TO THIS ADDRESS. **SEND TO: Commissioner for Patents, P.O. Box 1450, Alexandria, VA 22313-1450.**

If you need assistance in completing the form, call 1-800-PTO-9199 and select option 2.

Privacy Act Statement

The **Privacy Act of 1974 (P.L. 93-579)** requires that you be given certain information in connection with your submission of the attached form related to a patent application or patent. Accordingly, pursuant to the requirements of the Act, please be advised that: (1) the general authority for the collection of this information is 35 U.S.C. 2(b)(2); (2) furnishing of the information solicited is voluntary; and (3) the principal purpose for which the information is used by the U.S. Patent and Trademark Office is to process and/or examine your submission related to a patent application or patent. If you do not furnish the requested information, the U.S. Patent and Trademark Office may not be able to process and/or examine your submission, which may result in termination of proceedings or abandonment of the application or expiration of the patent.

The information provided by you in this form will be subject to the following routine uses:

1. The information on this form will be treated confidentially to the extent allowed under the Freedom of Information Act (5 U.S.C. 552) and the Privacy Act (5 U.S.C 552a). Records from this system of records may be disclosed to the Department of Justice to determine whether disclosure of these records is required by the Freedom of Information Act.
2. A record from this system of records may be disclosed, as a routine use, in the course of presenting evidence to a court, magistrate, or administrative tribunal, including disclosures to opposing counsel in the course of settlement negotiations.
3. A record in this system of records may be disclosed, as a routine use, to a Member of Congress submitting a request involving an individual, to whom the record pertains, when the individual has requested assistance from the Member with respect to the subject matter of the record.
4. A record in this system of records may be disclosed, as a routine use, to a contractor of the Agency having need for the information in order to perform a contract. Recipients of information shall be required to comply with the requirements of the Privacy Act of 1974, as amended, pursuant to 5 U.S.C. 552a(m).
5. A record related to an International Application filed under the Patent Cooperation Treaty in this system of records may be disclosed, as a routine use, to the International Bureau of the World Intellectual Property Organization, pursuant to the Patent Cooperation Treaty.
6. A record in this system of records may be disclosed, as a routine use, to another federal agency for purposes of National Security review (35 U.S.C. 181) and for review pursuant to the Atomic Energy Act (42 U.S.C. 218(c)).
7. A record from this system of records may be disclosed, as a routine use, to the Administrator, General Services, or his/her designee, during an inspection of records conducted by GSA as part of that agency's responsibility to recommend improvements in records management practices and programs, under authority of 44 U.S.C. 2904 and 2906. Such disclosure shall be made in accordance with the GSA regulations governing inspection of records for this purpose, and any other relevant (*i.e.*, GSA or Commerce) directive. Such disclosure shall not be used to make determinations about individuals.
8. A record from this system of records may be disclosed, as a routine use, to the public after either publication of the application pursuant to 35 U.S.C. 122(b) or issuance of a patent pursuant to 35 U.S.C. 151. Further, a record may be disclosed, subject to the limitations of 37 CFR 1.14, as a routine use, to the public if the record was filed in an application which became abandoned or in which the proceedings were terminated and which application is referenced by either a published application, an application open to public inspection or an issued patent.
9. A record from this system of records may be disclosed, as a routine use, to a Federal, State, or local law enforcement agency, if the USPTO becomes aware of a violation or potential violation of law or regulation.

UNITED STATES PATENT AND TRADEMARK OFFICE

UNITED STATES DEPARTMENT OF COMMERCE
United States Patent and Trademark Office
Address: COMMISSIONER FOR PATENTS
P.O. Box 1450
Alexandria, Virginia 22313-1450
www.uspto.gov

APPLICATION NO.	FILING DATE	FIRST NAMED INVENTOR	ATTORNEY DOCKET NO.	CONFIRMATION NO.
12/051,416	03/19/2008	Won Joo PARK	0203-0016	1493

7590 11/25/2008

Jefferson IP Law, LLP
1730 M Street, NW
Suite 807
Washington, DC 20036

EXAMINER
KOONTZ, TAMMY J

ART UNIT	PAPER NUMBER
3974	

MAIL DATE	DELIVERY MODE
11/25/2008	PAPER

DECISION GRANTING PETITION UNDER 37 CFR 1.138(d)

The declaration of express abandonment is recognized

This is in response to the petition under 37 CFR 1.138(d), requesting for a refund of any previously paid search fee and excess claims fee in the above-identified application.

The petition is granted.

The express abandonment is recognized. Any previously paid search fee and excess claims fee are hereby refunded.

Telephone inquiries should be directed to the Office of Data Management at (571) 272-4200.

Betty Powell

Patent Publication Branch
Office of Data Management

Adjustment date: 11/26/2008 BPOWELL
03/20/2008 INTEFSW 00001393 12051416
02 FC:1111 -510.00 OP

Refund Ref:
11/26/2008 0030063913

Credit Card Refund Total: $255.00

Master C: XXXXXXXXXXXX5196

FORM PET651G (Rev. 08/07)

UNITED STATES PATENT AND TRADEMARK OFFICE

Commissioner for Patents
United States Patent and Trademark Office
P.O. Box 1450
Alexandria, VA 22313-1450
www.uspto.gov

WARD AND SMITH, P.A.
1001 COLLEGE COURT
P.O. BOX 867
NEW BERN NC 28563-0867

COPY MAILED

MAR 0 2 2009

OFFICE OF PETITIONS

In re Application of

AMUNDSON, Michael D. et al.
Application No. 12/051,440
Filed: March 19, 2008
Attorney Docket No. **ROC920070545US1 (IBM 11)**

DECISION ON PETITION
TO WITHDRAW
FROM RECORD

This is a decision on the Request to Withdraw as attorney or agent of record under 37 C.F.R. § 1.36(b), filed January 23, 2009.

The request is **APPROVED**.

A grantable request to withdraw as attorney/agent of record must be signed by every attorney/agent seeking to withdraw or contain a clear indication that one attorney is signing on behalf of another/others. The Office requires the practitioner(s) requesting withdrawal to certify that he, she, or they have: (1) given reasonable notice to the client, prior to the expiration of the response period, that the practitioner(s) intends to withdraw from employment; (2) delivered to the client or a duly authorized representative of the client all papers and property (including funds) to which the client is entitled; and (3) notified the client of any responses that may be due and the time frame within which the client must respond, pursuant 37 CFR 10.40(c).

The request was signed by G. Peter Albert, Jr. on behalf of all attorneys of record who are associated with customer No. 74342. All attorneys/agents associated have been withdrawn. Applicant is reminded that there is no attorney of record at this time.

All future correspondence will be directed to the first named inventor Michael D. Amundson at the address indicated below.

There are no outstanding office actions at this time.

Telephone inquiries concerning this decision should be directed to Michelle R. Eason at 571-272-4231.

Michelle R. Eason
Paralegal Specialist
Office of Petitions

cc: **MICHAEL D. AMUNDSON**
637 ZUMBRO HILLS DRIVE S.W.
ORONOCO, MINNESOTA 55960

UNITED STATES PATENT AND TRADEMARK OFFICE

UNITED STATES DEPARTMENT OF COMMERCE
United States Patent and Trademark Office
Address: COMMISSIONER FOR PATENTS
P.O. Box 1450
Alexandria, Virginia 22313-1450
www.uspto.gov

APPLICATION NO.	FILING DATE	FIRST NAMED INVENTOR	ATTORNEY DOCKET NO.	CONFIRMATION NO.
12/051,467	03/19/2008	Akihiko Sano	NGTOSH.012AUS	1572

7590 03/04/2010
KNOBBE MARTENS OLSON & BEAR LLP
2040 MAIN STREET
FOURTEENTH FLOOR
IRVINE, CA 92614

EXAMINER
HJERPE, RICHARD A

ART UNIT	PAPER NUMBER
2629	

NOTIFICATION DATE	DELIVERY MODE
03/04/2010	ELECTRONIC

DECISION GRANTING PETITION UNDER 37 CFR 1.138(d)

The declaration of express abandonment is recognized

This is in response to the petition under 37 CFR 1.138(d), requesting for a refund of any previously paid search fee and excess claims fee in the above-identified application.

The petition is granted.

The express abandonment is recognized. Any previously paid search fee and excess claims fee are hereby refunded.

Telephone inquiries should be directed to the Office of Data Management at (571) 272-4200.

Mimi Harris

Patent Publication Branch
Office of Data Management

[illegible]

[illegible]

[illegible]

Adjustment date: 03/04/2010 NFARMER
03/20/2006 INTERSN 09201686 12051467
02 FC:1111 -510.00 OP

FORM PET651G (Rev. 08/07)

UNITED STATES PATENT AND TRADEMARK OFFICE

Commissioner for Patents
United States Patent and Trademark Office
P.O. Box 1450
Alexandria, VA 22313-1450
www.uspto.gov

FISH & RICHARDSON P.C.
P.O. BOX 1022
MINNEAPOLIS MN 55440-1022

MAILED

APR 0 1 2009

OFFICE OF PETITIONS

In re Application of
Peter De Groot et al
Application No. 12/051,531
Filed: March 19, 2008
Attorney Docket No. 09712-459002

DECISION GRANTING PETITION
UNDER 37 CFR 1.313(c)(2)

This is a decision on the petition under 37 CFR 1.313(c)(2), filed March 31, 2009, to withdraw the above-identified application from issue after payment of the issue fee.

The petition is **GRANTED**.

The above-identified application is withdrawn from issue for consideration of a submission under 37 CFR 1.114 (request for continued examination). *See* 37 CFR 1.313(c)(2).

Petitioner is advised that the issue fee paid on March 13, 2009 cannot be refunded. If, however, this application is again allowed, petitioner may request that it be applied towards the issue fee required by the new Notice of Allowance.[1]

Telephone inquiries should be directed to the undersigned at (571) 272-3208.

This application is being referred to Technology Center AU 2877 for processing of the request for continued examination under 37 CFR 1.114 and for consideration of the concurrently filed IDS.

/Karen Creasy/
Karen Creasy
Petitions Examiner
Office of Petitions

---

[1] *The request to apply the issue fee to the new Notice may be satisfied by completing and returning the new Part B – Fee(s) Transmittal Form (along with any balance due at the time of submission). Petitioner is advised that the Issue Fee Transmittal Form* ***must*** *be completed and timely submitted to avoid abandonment of the application.*

UNITED STATES PATENT AND TRADEMARK OFFICE

Commissioner for Patents
United States Patent and Trademark Office
P.O. Box 1450
Alexandria, VA 22313-1450
www.uspto.gov

FERNANDEZ & ASSOCIATES LLP
1047 EL CAMINO REAL
SUITE 201
MENLO PARK, CA 94025

COPY MAILED
JAN 21 2009

In re Application of	:	
Dennis S. Fernandez	:	
Application No. 12/051,547	:	ON PETITION
Filed: March 19, 2008	:	
Attorney Docket No. FERN-P014D	:	

This is a decision on the petition under 37 CFR 1.137(b), filed December 16, 2008, to revive the above-identified application.

The petition is **GRANTED.**

The above-identified application became abandoned for failure to reply in a timely manner to the Notice To File Corrected Application Papers (Notice) mailed April 7, 2008. The Notice set a period for reply of two (2) months from the mail date of the Notice. No extension of time under the provisions of 37 CFR 1.136(a) were obtained. Accordingly, the above-identified application became abandoned on June 8, 2008.

Telephone inquiries concerning this decision should be directed to Irvin Dingle at (571) 272-3210.

This matter is being referred to the Office of Patent Application Processing.

Irvin Dingle
Petitions Examiner
Office of Petitions

UNITED STATES PATENT AND TRADEMARK OFFICE

Commissioner for Patents
United States Patent and Trademark Office
P.O. Box 1450
Alexandria, VA 22313-1450
www.uspto.gov

PHILIP S JOHNSON
JOHNSON & JOHNSON
ONE JOHNSON & JOHNSON PLAZA
NEW BRUNSWICK NJ 08933-7003

COPY MAILED

NOV 06 2009

OFFICE OF PETITIONS

In re Application of	:	
Chase, et al.	:	
Application No. 12/051,562	:	ON PETITION
Filed: March 19, 2008	:	
Attorney Docket No. PPC5071USCNT5	:	

This is in response to the "PETITION FOR CHANGE IN NAME OF INVENTOR", filed August 13, 2009.

Applicants have requested to correct the name of inventors Julia Kozorovisky to Julia K. Iris, and Erin Danyi to Erin Marsee. Applicants have included affidavits from both inventors, setting forth the procedure by which the name changes was effected.

Accordingly, the request is **GRANTED** with respect to Marsee.

A review of the file reveals the application was filed with a 37 CFR 1.63 declaration listing three inventors - David Chase, Erin Danyi, and Tara Glasgow. With the instant petition, applicants have filed a declaration listing five inventors - David Chase, Erin Marsee, Mari Hou, Tara Glasgow, and Julia Iris.

If applicants wish to add inventors Julia Iris and Mari Hou, applicants should filed an appropriate petition under 37 CFR 1.48.

Office records have been changed to reflect the change in the inventor's Marsee's name.

The application is being forwarded to Group Art Unit 3761 for examination in due course.

Telephone inquiries regarding this decision should be directed to the undersigned at (571)272-3207.

Cliff Congo
Petitions Attorney
Office of Petitions

Enc: corrected filing receipt (3 pages)

UNITED STATES PATENT AND TRADEMARK OFFICE

UNITED STATES DEPARTMENT OF COMMERCE
United States Patent and Trademark Office
Address: COMMISSIONER FOR PATENTS
P.O. Box 1450
Alexandria, Virginia 22313-1450
www.uspto.gov

APPLICATION NUMBER	FILING or 371(c) DATE	GRP ART UNIT	FIL FEE REC'D	ATTY.DOCKET.NO	TOT CLAIMS	IND CLAIMS
12/051,562	03/19/2008	3761	1030	PPC5074USCNT3	19	3

CONFIRMATION NO. 1758

CORRECTED FILING RECEIPT

27777
PHILIP S. JOHNSON
JOHNSON & JOHNSON
ONE JOHNSON & JOHNSON PLAZA
NEW BRUNSWICK, NJ 08933-7003

OC000000038605650

Date Mailed: 11/04/2009

Receipt is acknowledged of this non-provisional patent application. The application will be taken up for examination in due course. Applicant will be notified as to the results of the examination. Any correspondence concerning the application must include the following identification information: the U.S. APPLICATION NUMBER, FILING DATE, NAME OF APPLICANT, and TITLE OF INVENTION. Fees transmitted by check or draft are subject to collection. Please verify the accuracy of the data presented on this receipt. **If an error is noted on this Filing Receipt, please submit a written request for a Filing Receipt Correction. Please provide a copy of this Filing Receipt with the changes noted thereon. If you received a "Notice to File Missing Parts" for this application, please submit any corrections to this Filing Receipt with your reply to the Notice. When the USPTO processes the reply to the Notice, the USPTO will generate another Filing Receipt incorporating the requested corrections**

Applicant(s)

David J. Chase, Somerville, NJ;
Erin Marsee, Nicholasville, KY;
Tara Glasgow, New Hope, PA;

Power of Attorney: The patent practitioners associated with Customer Number 000027777

Domestic Priority data as claimed by applicant

This application is a CON of 10/848,257 05/14/2004 ABN

Foreign Applications

If Required, Foreign Filing License Granted: 03/28/2008

The country code and number of your priority application, to be used for filing abroad under the Paris Convention, is **US 12/051,562**

Projected Publication Date: Not Applicable

Non-Publication Request: No

Early Publication Request: No

Title

Tampon with flexible panels

Preliminary Class

604

PROTECTING YOUR INVENTION OUTSIDE THE UNITED STATES

Since the rights granted by a U.S. patent extend only throughout the territory of the United States and have no effect in a foreign country, an inventor who wishes patent protection in another country must apply for a patent in a specific country or in regional patent offices. Applicants may wish to consider the filing of an international application under the Patent Cooperation Treaty (PCT). An international (PCT) application generally has the same effect as a regular national patent application in each PCT-member country. The PCT process **simplifies** the filing of patent applications on the same invention in member countries, but **does not result** in a grant of "an international patent" and does not eliminate the need of applicants to file additional documents and fees in countries where patent protection is desired.

Almost every country has its own patent law, and a person desiring a patent in a particular country must make an application for patent in that country in accordance with its particular laws. Since the laws of many countries differ in various respects from the patent law of the United States, applicants are advised to seek guidance from specific foreign countries to ensure that patent rights are not lost prematurely.

Applicants also are advised that in the case of inventions made in the United States, the Director of the USPTO must issue a license before applicants can apply for a patent in a foreign country. The filing of a U.S. patent application serves as a request for a foreign filing license. The application's filing receipt contains further information and guidance as to the status of applicant's license for foreign filing.

Applicants may wish to consult the USPTO booklet, "General Information Concerning Patents" (specifically, the section entitled "Treaties and Foreign Patents") for more information on timeframes and deadlines for filing foreign patent applications. The guide is available either by contacting the USPTO Contact Center at 800-786-9199, or it can be viewed on the USPTO website at http://www.uspto.gov/web/offices/pac/doc/general/index.html.

For information on preventing theft of your intellectual property (patents, trademarks and copyrights), you may wish to consult the U.S. Government website, http://www.stopfakes.gov. Part of a Department of Commerce initiative, this website includes self-help "toolkits" giving innovators guidance on how to protect intellectual property in specific countries such as China, Korea and Mexico. For questions regarding patent enforcement issues, applicants may call the U.S. Government hotline at 1-866-999-HALT (1-866-999-4158).

LICENSE FOR FOREIGN FILING UNDER

Title 35, United States Code, Section 184

Title 37, Code of Federal Regulations, 5.11 & 5.15

GRANTED

The applicant has been granted a license under 35 U.S.C. 184, if the phrase "IF REQUIRED, FOREIGN FILING LICENSE GRANTED" followed by a date appears on this form. Such licenses are issued in all applications where the conditions for issuance of a license have been met, regardless of whether or not a license may be required as

set forth in 37 CFR 5.15. The scope and limitations of this license are set forth in 37 CFR 5.15(a) unless an earlier license has been issued under 37 CFR 5.15(b). The license is subject to revocation upon written notification. The date indicated is the effective date of the license, unless an earlier license of similar scope has been granted under 37 CFR 5.13 or 5.14.

This license is to be retained by the licensee and may be used at any time on or after the effective date thereof unless it is revoked. This license is automatically transferred to any related applications(s) filed under 37 CFR 1.53(d). This license is not retroactive.

The grant of a license does not in any way lessen the responsibility of a licensee for the security of the subject matter as imposed by any Government contract or the provisions of existing laws relating to espionage and the national security or the export of technical data. Licensees should apprise themselves of current regulations especially with respect to certain countries, of other agencies, particularly the Office of Defense Trade Controls, Department of State (with respect to Arms, Munitions and Implements of War (22 CFR 121-128)); the Bureau of Industry and Security, Department of Commerce (15 CFR parts 730-774); the Office of Foreign AssetsControl, Department of Treasury (31 CFR Parts 500+) and the Department of Energy.

NOT GRANTED

No license under 35 U.S.C. 184 has been granted at this time, if the phrase "IF REQUIRED, FOREIGN FILING LICENSE GRANTED" DOES NOT appear on this form. Applicant may still petition for a license under 37 CFR 5.12, if a license is desired before the expiration of 6 months from the filing date of the application. If 6 months has lapsed from the filing date of this application and the licensee has not received any indication of a secrecy order under 35 U.S.C. 181, the licensee may foreign file the application pursuant to 37 CFR 5.15(b).

UNITED STATES PATENT AND TRADEMARK OFFICE

UNITED STATES DEPARTMENT OF COMMERCE
United States Patent and Trademark Office
Address: COMMISSIONER FOR PATENTS
P.O. Box 1450
Alexandria, Virginia 22313-1450
www.uspto.gov

APPLICATION NO.	FILING DATE	FIRST NAMED INVENTOR	ATTORNEY DOCKET NO.	CONFIRMATION NO.
12/051,577	03/19/2008	Takami MIURA	0649-1703PUS1	1786

2292 7590 01/08/2009
BIRCH STEWART KOLASCH & BIRCH
PO BOX 747
FALLS CHURCH, VA 22040-0747

EXAMINER

ART UNIT	PAPER NUMBER
3664	

NOTIFICATION DATE	DELIVERY MODE
01/08/2009	ELECTRONIC

Please find below and/or attached an Office communication concerning this application or proceeding.

The time period for reply, if any, is set in the attached communication.

Notice of the Office communication was sent electronically on above-indicated "Notification Date" to the following e-mail address(es):

mailroom@bskb.com

UNITED STATES PATENT AND TRADEMARK OFFICE

Commissioner for Patents
United States Patent and Trademark Office
P.O. Box 1450
Alexandria, VA 22313-1450
www.uspto.gov

JAN 07 2009

Birch, Stewart, Kolasch & Birch
P.O. Box 747
Falls Church, VA 22040-0747

In re application of Takami Miura et al. Application No. 12/051,577 Filed: March 19, 2008 For: DEVICE OPERABLE TO CONTROL TURNING OF VEHICLE	: : : : : :	**DECISION ON REQUEST TO PARTICIPATE IN PATENT PROSECUTION HIGHWAY PROGRAM AND PETITION TO MAKE SPECIAL UNDER 37 CFR 1.102(d)**

This is a decision on the request to participate in the Patent Prosecution Highway (PPH) program and the petition under 37 CFR 1.102(d), filed December 18, 2008, to make the above-identified application special.

The request and petition are **GRANTED**.

A grantable request to participate in the PPH program and petition to make special require:

(1) The U.S. application must validly claim priority under 35 U.S.C. 119(a) to one or more applications filed in the JPO;
(2) Applicant must submit a copy of the allowable/patentable claim(s) from the JPO application(s) along with an English translation thereof and a statement that the English translation is accurate;
(3) All the claims in the U.S. application must sufficiently correspond or be amended to sufficiently correspond to the allowable/patentable claim(s) in the JPO application(s);
(4) Examination of the U.S. application has not begun;
(5) Applicant must submit a copy of the latest Office action from each of the JPO application(s) containing the allowable/patentable claim(s) along with an English translation thereof and a statement that the English translation is accurate;
(6) Applicant must submit an IDS listing the documents cited by the JPO examiner in the JPO Office action along with copies of documents except U.S. patents or U.S. patent application publications; and
(7) The required petition fee under 37 CFR 1.17(h).

In light of the preliminary amendment filed December 18, 2008 with the petition, the request to participate in the PPH program complies with the above requirements. Therefore, the above-identified application has been accorded "special" status.

All other inquiries concerning the examination or status of the application should be directed to the Patent Application Information Retrieval (PAIR) system.

The application is being forwarded to the examiner for action on the merits commensurate with this decision.

Any inquiry regarding this decision should be directed to Steven N. Meyers, Quality Assurance Specialist, at (571) 272-6611.

Steven N. Meyers,
Quality Assurance Specialist
Technology Center 3600

Sm/sm: 1/6/09

UNITED STATES PATENT AND TRADEMARK OFFICE

MAILED
FROM DIRECTOR'S OFFICE

MAR 03 2009

TECHNOLOGY CENTER 3600

Commissioner for Patents
United States Patent and Trademark Office
P.O. Box 1450
Alexandria, VA 22313-1450
www.uspto.gov

Birch, Stewart, Kolasch & Birch
P.O. Box 747
Falls Church, VA 22040-0747

In re application of Takanori Ishii et al. Application No. 12/051,595 Filed: March 19, 2008 For: VEHICLE LIMITED SLIP DIFFERENTIAL	**DECISION ON REQUEST TO PARTICIPATE IN PATENT PROSECUTION HIGHWAY PROGRAM AND PETITION TO MAKE SPECIAL UNDER 37 CFR 1.102(d)**

This is a decision on the request to participate in the Patent Prosecution Highway (PPH) program and the petition under 37 CFR 1.102(d), filed February 20, 2009, to make the above-identified application special.

The request and petition are **DISMISSED**.

A grantable request to participate in the PPH pilot program and petition to make special require:

(1) The U.S. application must validly claim priority under 35 U.S.C. 119(a) to one or more applications filed in the JPO;
(2) Applicant must submit a copy of the allowable/patentable claim(s) from the JPO application(s) along with an English translation thereof and a statement that the English translation is accurate;
(3) All the claims in the U.S. application must sufficiently correspond or be amended to sufficiently correspond to the allowable/patentable claim(s) in the JPO application(s);
(4) Examination of the U.S. application has not begun;
(5) Applicant must submit a copy of the latest Office action from each of the JPO application(s) containing the allowable/patentable claim(s) along with an English translation thereof and a statement that the English translation is accurate;
(6) Applicant must submit an IDS listing the documents cited by the JPO examiner in the JPO Office action along with copies of documents except U.S. patents or U.S. patent application publications; and
(7) The required petition fee under 37 CFR 1.17(h).

The request to participate in the PPH pilot program and petition fail to include:
(2) A copy of the allowable/patentable claims from the JPO application. Although there appears to be a verification of translation filed, there does not appear to be a copy of the allowable claims from the JPO application.
(3) Claims of the U.S. Application that sufficiently correspond to the allowable claims of the JPO application. Specifically, as there is no preliminary amendment seen as being filed, the original 4 claims remain in the application, despite the filed claims correspondence table indicating only 2 pending claims.

Applicant is given a time period of **ONE MONTH or THIRTY DAYS**, whichever is longer, to correct the deficiencies. **NO EXTENSION OF TIME UNDER 37 CFR 1.136 IS PERMITTED.** If the deficiencies are not corrected with the time period given, the application will await action in its regular turn. All replies to a decision to dismiss must be submitted by EFS-Web using the document description "Petition to make special under Patent Prosecution Highway."

Any inquiry regarding this decision should be directed to Steven N. Meyers, Quality Assurance Specialist, at (571) 272-6611.

Steven N. Meyers,
Quality Assurance Specialist
Technology Center 3600

Sm/sm: 3/1/09

UNITED STATES PATENT AND TRADEMARK OFFICE

Commissioner for Patents
United States Patent and Trademark Office
P.O. Box 1450
Alexandria, VA 22313-1450
www.uspto.gov

APR 08 2009

Birch, Stewart, Kolasch & Birch
P.O. Box 747
Falls Church, VA 22040-0747

In re application of Takanori Ishii et al. Application No. 12/051,595 Filed: March 19, 2008 For: VEHICLE LIMITED SLIP DIFFERENTIAL	: : : : : :	**DECISION ON REQUEST TO PARTICIPATE IN PATENT PROSECUTION HIGHWAY PROGRAM AND PETITION TO MAKE SPECIAL UNDER 37 CFR 1.102(d)**

This is a decision on the renewed request to participate in the Patent Prosecution Highway (PPH) program and the petition under 37 CFR 1.102(d), filed May 9, 2008, to make the above-identified application special.

The request and petition are **GRANTED**.

A grantable request to participate in the PPH program and petition to make special require:

(1) The U.S. application must validly claim priority under 35 U.S.C. 119(a) to one or more applications filed in the JPO;
(2) Applicant must submit a copy of the allowable/patentable claim(s) from the JPO application(s) along with an English translation thereof and a statement that the English translation is accurate;
(3) All the claims in the U.S. application must sufficiently correspond or be amended to sufficiently correspond to the allowable/patentable claim(s) in the JPO application(s);
(4) Examination of the U.S. application has not begun;
(5) Applicant must submit a copy of the latest Office action from each of the JPO application(s) containing the allowable/patentable claim(s) along with an English translation thereof and a statement that the English translation is accurate;
(6) Applicant must submit an IDS listing the documents cited by the JPO examiner in the JPO Office action along with copies of documents except U.S. patents or U.S. patent application publications; and
(7) The required petition fee under 37 CFR 1.17(h).

In light of renewed petition, which included a copy of the claims that were allowed in the JPO application, and a preliminary amendment that amended the claims to precisely correspond to the above-noted allowed JPO claims, the request to participate in the PPH program complies with the above requirements. Therefore, the above-identified application has been accorded "special" status.

All other inquiries concerning the examination or status of the application should be directed to the Patent Application Information Retrieval (PAIR) system.

The application is being forwarded to the examiner for action on the merits commensurate with this decision.

Any inquiry regarding this decision should be directed to Steven N. Meyers, Quality Assurance Specialist, at (571) 272-6611.

Steven N. Meyers,
Quality Assurance Specialist
Technology Center 3600

Sm/sm: 4/7/09

UNITED STATES PATENT AND TRADEMARK OFFICE

Commissioner for Patents
United States Patent and Trademark Office
P.O. Box 1450
Alexandria, VA 22313-1450
www.uspto.gov

COPY MAILED

JUN 0 9 2008

OFFICE OF PETITIONS

BELL, BOYD & LLOYD, LLP
P. O. BOX 1135
CHICAGO IL 60690

In re Application of
Keiichi Kagami et al.
Application No. 12/051,603
Filed: March 19, 2008
Attorney Docket No. 112857-1264

: DECISION GRANTING
: PETITION

This is a decision on the filing date petition filed April 23, 2008. The petition is treated under 37 CFR 1.53(e)(2).

The application was filed on March 19, 2008. However, on April 14, 2008 the Office of Initial Patent Examination mailed a Notice of Incomplete Application stating that the application had not been filed with drawings and thus, the application could not be accorded a filing date.

In response, the present petition was filed. Petitioner contends that the instant application, upon filing, properly claimed priority to a earlier filed Japanese Patent Application which was incorporated by reference.

On September 21, 2004, § 1.57 was added to read, in pertinent part that:

> (a) Subject to the conditions and requirements of this paragraph, if all or a portion of the specification or drawing(s) is inadvertently omitted from an application, but the application contains ... a claim under 1.78 for the benefit of a prior-filed provisional, nonprovisional or international application, that was present on the filing date of the application, and the inadvertently omitted portion of the specification or drawing(s) is completely contained in the prior-filed application, the claim under ... § 1.78 shall also be considered an incorporation by reference of the prior-filed application as to the inadvertently omitted portion of the specification or drawing(s). MPEP 201.17

Therefore, if an application, as originally filed on or after September 21, 2004, <u>does not</u> include an explicit incorporation by reference statement in the specification, and is entitled to a filing date despite the inadvertent omission of a portion of the prior filed application(s), an applicant may be permitted to add the omitted material by filing an amendment under 37 CFR 1.57(a) within the time period set by the Office. <u>See</u> 37 CFR 1.57(a)(1) and MPEP 201.06(c)(IV).

However, petitioner's attention is directed to MPEP 601.01(f), which provides that:

> It has been USPTO practice to treat an application that contains at least one process or method claim as an application for which a drawing is not necessary for an understanding of the invention under 35 U.S.C. 113 (first sentence).

A review of the application confirms that as filed it contained at least one method claim. Pursuant to § 601.01(f), a drawing is not considered essential for a filing date. Thus, the application is entitled to a filing date without drawings present in the application.

In view of the above, the instant petition is entitled to a filing date of March 19, 2008, although without drawings present in the application and to that extent, the petition is **GRANTED**.

The petition fee in the amount of $400.00 will be credited back to deposit account no. 02-1818.

This application is being forwarded to the Office of Patent Application Processing (OPAP) for further processing with a filing date of March 19, 2008, using the application papers received in the Office on that date and with an indication in Office records that the drawings, as described in the specification, while not included with the application papers upon filing, were a part of the original disclosure.

In light of the explicit incorporation by reference, petitioner may file a preliminary amendment, for review by the Examiner in due course, to add the drawings filed with the instant petition.

Telephone inquiries concerning this matter should be directed to Senior Petitions Attorney Patricia Faison-Ball at (571) 272-3212.

Anthony Knight
Supervisor
Office of Petitions

UNITED STATES PATENT AND TRADEMARK OFFICE

UNDER SECRETARY OF COMMERCE FOR INTELLECTUAL PROPERTY AND
DIRECTOR OF THE UNITED STATES PATENT AND TRADEMARK OFFICE
WASHINGTON, DC 20231
www.uspto.gov

BIRCH STEWART KOLASCH & BIRCH
P.O. BOX 747
FALLS CHURCH, VA 22040-0747

In re application of	:	DECISION ON REQUEST TO
Yuichi Ushiroda et al.	:	PARTICIPATE IN PATENT
Application No. 12/051,604	:	PROSECUTION HIGHWAY
Filed: March 19, 2008	:	PROGRAM AND PETITION
For: DRIVING-FORCE DISTRIBUTION	:	TO MAKE SPECIAL UNDER
CONTROL DEVICE	:	37 CFR 1.102(d)

This is a decision on the request to participate in the Patent Prosecution Highway (PPH) program and the petition under 37 CFR 1.102(d), filed April 28, 2009, to make the above-identified application special.

The request and petition are **DISMSSED**.

A grantable request to participate in the PPH program and petition to make special require:

(1) The U.S. application must validly claim priority under 35 U.S.C. 119(a) to one or more applications filed in the JPO;

(2) Applicant must submit a copy of the allowable/patentable claim(s) from the JPO application(s) along with an English translation thereof and a statement that the English translation is accurate;

(3) All the claims in the U.S. application must sufficiently correspond or be amended to sufficiently correspond to the allowable/patentable claim(s) in the JPO application(s);

(4) Examination of the U.S. application has not begun;

(5) Applicant must submit a copy of all the Office actions from each of the JPO application(s) containing the allowable/patentable claim(s) along with an English translation thereof and a statement that the English translation is accurate;

(6) Applicant must submit an IDS listing the documents cited by the JPO examiner in the JPO Office action along with copies of documents except U.S. patents or U.S. patent application publications; and

(7) The required petition fee under 37 CFR 1.17(h).

The request to participate in the PPH program and petition fail to include:

(5) a copy of all the Office actions from each of the JPO application(s) containing the allowable/patentable claim(s) along with an English translation thereof and a statement that the English translation is accurate.

The request and petition includes an English translation of the September 17, 2008 Office action issued in the Japanese application; however, it refers to a previous notification of reason for refusal dated May 2, 2008. The PPH program requires that **all** Office actions and an English translation thereof be provided in support of the petition.

Applicant is given a time period of **ONE MONTH or THIRTY DAYS**, whichever is longer, to correct the deficiencies. **NO EXTENSION OF TIME UNDER 37 CFR 1.136 IS PERMITTED.** If the deficiencies are not corrected with the time period given, the application will await action in its regular turn.

Response must submitted by EFS-Web using the document description "Petition to make special under Pat Pros Hwy".

Telephone inquires concerning this decision should be directed to Teri P. Luu at 571-272-7045. All other inquiries concerning the examination or status of the application should be directed to the Patent Application Information Retrieval (PAIR) system.

Teri P. Luu
Quality Assurance Specialist
Technology Center 3600

tpl: 05/01/09

UNITED STATES PATENT AND TRADEMARK OFFICE

UNDER SECRETARY OF COMMERCE FOR INTELLECTUAL PROPERTY AND
DIRECTOR OF THE UNITED STATES PATENT AND TRADEMARK OFFICE
WASHINGTON, DC 20231
www.uspto.gov

JUN 0 9 2009

BIRCH STEWART KOLASCH & BIRCH
P.O. BOX 747
FALLS CHURCH, VA 22040-0747

In re application of	:	DECISION ON REQUEST TO
Yuichi Ushiroda et al.	:	PARTICIPATE IN PATENT
Application No. 12/051,604	:	PROSECUTION HIGHWAY
Filed: March 19, 2008	:	PROGRAM AND PETITION
For: DRIVING-FORCE DISTRIBUTION	:	TO MAKE SPECIAL UNDER
CONTROL DEVICE	:	37 CFR 1.102(d)

This is a decision on the renewed request to participate in the Patent Prosecution Highway (PPH) program and the petition under 37 CFR 1.102(d), filed June 4, 2009, to make the above-identified application special.

The request and petition are **GRANTED**.

A grantable request to participate in the PPH program and petition to make special require:

(1) The U.S. application must validly claim priority under 35 U.S.C. 119(a) to one or more applications filed in the JPO;

(2) Applicant must submit a copy of the allowable/patentable claim(s) from the JPO application(s) along with an English translation thereof and a statement that the English translation is accurate;

(3) All the claims in the U.S. application must sufficiently correspond or be amended to sufficiently correspond to the allowable/patentable claim(s) in the JPO application(s);

(4) Examination of the U.S. application has not begun;

(5) Applicant must submit a copy of all the Office actions from each of the JPO application(s) containing the allowable/patentable claim(s) along with an English translation thereof and a statement that the English translation is accurate;

(6) Applicant must submit an IDS listing the documents cited by the JPO examiner in the JPO Office action along with copies of documents except U.S. patents or U.S. patent application publications; and

(7) The required petition fee under 37 CFR 1.17(h).

Telephone inquires concerning this decision should be directed to Teri P. Luu at 571-272-7045. All other inquiries concerning the examination or status of the application should be directed to the Patent Application Information Retrieval (PAIR) system.

The application is being forwarded to the examiner for action on the merits commensurate with this decision.

Teri P. Luu
Quality Assurance Specialist
Technology Center 3600

tpl: 06/08/09

UNITED STATES PATENT AND TRADEMARK OFFICE

UNITED STATES DEPARTMENT OF COMMERCE
United States Patent and Trademark Office
Address: COMMISSIONER FOR PATENTS
P.O. Box 1450
Alexandria, Virginia 22313-1450
www.uspto.gov

APPLICATION NO.	FILING DATE	FIRST NAMED INVENTOR	ATTORNEY DOCKET NO.	CONFIRMATION NO.
12/051,609	03/19/2008	Takashi SASAKURA	0649-1707PUS1	1845

2292 7590 01/14/2009
BIRCH STEWART KOLASCH & BIRCH
PO BOX 747
FALLS CHURCH, VA 22040-0747

EXAMINER
LEWIS, TISHA D

ART UNIT	PAPER NUMBER
3655	

NOTIFICATION DATE	DELIVERY MODE
01/14/2009	ELECTRONIC

Please find below and/or attached an Office communication concerning this application or proceeding.

The time period for reply, if any, is set in the attached communication.

Notice of the Office communication was sent electronically on above-indicated "Notification Date" to the following e-mail address(es):

mailroom@bskb.com

UNITED STATES PATENT AND TRADEMARK OFFICE

UNDER SECRETARY OF COMMERCE FOR INTELLECTUAL PROPERTY AND
DIRECTOR OF THE UNITED STATES PATENT AND TRADEMARK OFFICE
WASHINGTON, DC 20231
www.uspto.gov

JAN 13 2009

Birch Stewart Kolasch & Birch
PO Box 747
Falls Church, VA 22040-0747

In re application of	:	DECISION ON REQUEST TO
Takashi Sasakura et al.	:	PARTICIPATE IN PATENT
Application No. 12/051,609	:	PROSECUTION HIGHWAY
Filed: March 19, 2008	:	PROGRAM AND PETITION
For: CONTROL APPARATUS OF	:	TO MAKE SPECIAL UNDER
VEHICLE	:	37 CFR 1.102(d)

This is a decision on the request to participate in the Patent Prosecution Highway (PPH) program and the petition under 37 CFR 1.102(d), filed January 12, 2009, to make the above-identified application special.

The request and petition are **GRANTED**.

A grantable request to participate in the PPH pilot program and petition to make special require:

(1) The U.S. application must validly claim priority under 35 U.S.C. 119(a) to one or more applications filed in the JPO;
(2) Applicant must submit a copy of the allowable/patentable claim(s) from the JPO application(s) along with an English translation thereof and a statement that the English translation is accurate;
(3) All the claims in the U.S. application must sufficiently correspond or be amended to sufficiently correspond to the allowable/patentable claim(s) in the JPO application(s);
(4) Examination of the U.S. application has not begun;
(5) Applicant must submit a copy of all the Office actions from each of the JPO application(s) containing the allowable/patentable claim(s) along with an English translation thereof and a statement that the English translation is accurate;
(6) Applicant must submit an IDS listing the documents cited by the JPO examiner in the JPO Office action along with copies of documents except U.S. patents or U.S. patent application publications; and
(7) The required petition fee under 37 CFR 1.17(h).

In light of the preliminary amendment and the IDS filed January 12, 2009, the request to participate in the PPH program complies with the above requirements. Therefore, the above-identified application has been accorded "special" status.

The application will be forwarded to the examiner for action on the merits commensurate with this decision.

Telephone inquires concerning this decision should be directed to Teri P. Luu, Quality Assurance Specialist, at 571-272-7045. All other inquiries concerning the examination or status of the application should be directed to the Patent Application Information Retrieval (PAIR) system.

Teri P. Luu
Quality Assurance Specialist
Technology Center 3600

tpl: 01/13/09

UNITED STATES PATENT AND TRADEMARK OFFICE

UNITED STATES DEPARTMENT OF COMMERCE
United States Patent and Trademark Office
Address: COMMISSIONER FOR PATENTS
P.O. Box 1450
Alexandria, Virginia 22313-1450
www.uspto.gov

DEMONT & BREYER, LLC
100 COMMONS WAY, Ste. 250
HOLMDEL, NJ 07733

Mail Date: 04/20/2010

Applicant	: Dustin Wade Carr	: DECISION ON REQUEST FOR
Patent Number	: 7583390	: RECALCULATION of PATENT
Issue Date	: 09/01/2009	: TERM ADJUSTMENT IN VIEW
Appliction No	: 12/051,647	: OF WYETH AND NOTICE OF INTENT TO
Filed	: 03/19/2008	: ISSUE CERTIFICATE OF CORRECTION
		:

The Request for Recalculation is **GRANTED** to the extent indicated.

The patent term adjustment has been determined to be **0** days. The USPTO will *sua sponte* issue a certificate of correction reflecting the amount of PTA days determined by the recalculation.

Prior to the issuance of the certificate of correction, the USPTO will afford patentee an opportunity to be heard and request reconsideration. Accordingly, patentee has **one month or thirty (30) days**, whichever is longer, to file a request for reconsideration of this patent term adjustment calculation. See 35 U.S.C. 154(b)(3)(B)(ii) and 37 CFR 1.322(a)(4). No extensions of time will be granted under 37 CFR 1.136.

Patentee should use document code PET.OP if electronically filing a request for reconsideration of this patent term adjustment calculation. The patentee must also include the information required by 37 CFR 1.705(b)(2) and the fee required by 37 CFR 1.18(e). If patentee does not file a timely request for reconsideration of this patent term adjustment calculation including the information required by 37 CFR 1.705(b)(2) and the fee required by 37 CFR 1.18(e), the USPTO will issue a certificate of correction reflecting the PTA determination noted above.

Patentee should be aware that in order to preserve the right to review in the United States District Court for the District of Columbia of the USPTO patent term adjustment determination, patentee must ensure that he or she also take the steps required under 35 U.S.C. 154(b)(4)(A) in a timely manner. Nothing in the request for recalculation should be construed as providing an alternative time frame for commencing a civil action under 35 U.S.C. 154(b)(4)(A).

Any questions concerning this decision should be directed to the Office of Patent Legal Administration at 571-272-7702.

UNITED STATES PATENT AND TRADEMARK OFFICE

UNITED STATES DEPARTMENT OF COMMERCE
United States Patent and Trademark Office
Address: COMMISSIONER FOR PATENTS
P.O. Box 1450
Alexandria, Virginia 22313-1450
www.uspto.gov

DEMONT & BREYER, LLC
100 COMMONS WAY, Ste. 250
HOLMDEL, NJ 07733

Mail Date: 04/20/2010

Applicant	: Mark Allen Itzler	: DECISION ON REQUEST FOR
Patent Number	: 7582920	: RECALCULATION of PATENT
Issue Date	: 09/01/2009	: TERM ADJUSTMENT IN VIEW
Appliction No	: 12/051,651	: OF WYETH AND NOTICE OF INTENT TO
Filed	: 03/19/2008	: ISSUE CERTIFICATE OF CORRECTION
		:

The Request for Recalculation is **GRANTED** to the extent indicated.

The patent term adjustment has been determined to be **0** days. The USPTO will *sua sponte* issue a certificate of correction reflecting the amount of PTA days determined by the recalculation.

Prior to the issuance of the certificate of correction, the USPTO will afford patentee an opportunity to be heard and request reconsideration. Accordingly, patentee has **one month or thirty (30) days**, whichever is longer, to file a request for reconsideration of this patent term adjustment calculation. See 35 U.S.C. 154(b)(3)(B)(ii) and 37 CFR 1.322(a)(4). No extensions of time will be granted under 37 CFR 1.136.

Patentee should use document code PET.OP if electronically filing a request for reconsideration of this patent term adjustment calculation. The patentee must also include the information required by 37 CFR 1.705(b)(2) and the fee required by 37 CFR 1.18(e). If patentee does not file a timely request for reconsideration of this patent term adjustment calculation including the information required by 37 CFR 1.705(b)(2) and the fee required by 37 CFR 1.18(e), the USPTO will issue a certificate of correction reflecting the PTA determination noted above.

Patentee should be aware that in order to preserve the right to review in the United States District Court for the District of Columbia of the USPTO patent term adjustment determination, patentee must ensure that he or she also take the steps required under 35 U.S.C. 154(b)(4)(A) in a timely manner. Nothing in the request for recalculation should be construed as providing an alternative time frame for commencing a civil action under 35 U.S.C. 154(b)(4)(A).

Any questions concerning this decision should be directed to the Office of Patent Legal Administration at 571-272-7702.

UNITED STATES PATENT AND TRADEMARK OFFICE

UNITED STATES DEPARTMENT OF COMMERCE
United States Patent and Trademark Office
Address: COMMISSIONER FOR PATENTS
P.O. Box 1450
Alexandria, Virginia 22313-1450
www.uspto.gov

APPLICATION NO.	FILING DATE	FIRST NAMED INVENTOR	ATTORNEY DOCKET NO.	CONFIRMATION NO.
12/051,656	03/19/2008	Darko Pervan	1033462-000191	1931

21839 7590 05/07/2008
BUCHANAN, INGERSOLL & ROONEY PC
POST OFFICE BOX 1404
ALEXANDRIA, VA 22313-1404

EXAMINER

ART UNIT	PAPER NUMBER
3633	

NOTIFICATION DATE	DELIVERY MODE
05/07/2008	ELECTRONIC

Please find below and/or attached an Office communication concerning this application or proceeding.

The time period for reply, if any, is set in the attached communication.

Notice of the Office communication was sent electronically on above-indicated "Notification Date" to the following e-mail address(es):

ADIPFDD@bipc.com

UNITED STATES PATENT AND TRADEMARK OFFICE

Commissioner for Patents
United States Patent and Trademark Office
P.O. Box 1450
Alexandria, VA 22313-1450
www.uspto.gov

MAILED
FROM DIRECTORS OFFICE

MAY 06 2008

TECHNOLOGY CENTER 3600

Buchanan, Ingersoll & Rooney, PC
Post Office Box 1404
Alexandria, VA 22313-1404

In re application of	:	**DECISION ON PETITION**
Darko Pervan et al.	:	**TO MAKE SPECIAL FOR**
Application No. 12/051,656	:	**NEW APPLICATION**
Filed: March 19, 2008	:	**UNDER 37 CFR 1.102**
For: MECHANICAL LOCKING SYSTEM FOR PANELS AND METHOD OF INSTALLING SAME		

This is a decision on the petition filed on March 19, 2008 to make the above-identified application special for accelerated examination procedure under 37 C.F.R. § 1.102(d).

The petition to make the application special is **DISMISSED**.

REGULATION AND PRACTICE

A grantable petition to make special under 37 C.F.R. § 1.102(d) and pursuant to the "Change to Practice for Petitions in Patent Applications to Make Special and for Accelerated Examination" published in the Federal Register on June 26, 2006 (71 Fed. Reg. 36323), must satisfy the following conditions:

I. Conditions Regarding the Application:

1. the application must be a non-reissue utility or design application filed under 37 CFR 1.111(a);

2. the application, the petition and the required fees must be filed electronically using the USPTO's electronic filing system (EFS), or EFS-web; if not filed electronically, a statement asserting that EFS and EFS-web were not available during the normal business hours.

3. at the time of filing, the application must be complete under 37 CFR 1.51 and in condition for examination;

4. the application must contain three or fewer independent claims and twenty or fewer total claims and the claims must be directed to a single invention.

II. Conditions Regarding the Petition:

The petition must:

1. be filed with the application;

2. include a statement that applicant agrees not to separately argue the patentability of any independent claim during any appeal in the application;

3. include a statement that applicant agrees to make an election without traverse in a telephone interview.

4. include a statement that applicant agrees to conduct such an interview when requested by the examiner.

5. include a statement, made based on a good faith belief, that a preexamination search in compliance with the following requirements, was conducted, including an identification of the field of search by United States class and subclass, where applicable, and for database searches, the search logic or chemical structure or sequence used as a query, the name of the file(s) searched and the database service, and the date of the search.

The preexamination search must:

5.1 involve U.S. patents and patent application publications, foreign patent documents, and non-patent literature, unless the applicant can justify with reasonable certainty that no references more pertinent than those already identified are likely to be found in the eliminated sources and includes such a justification with this statement;

5.2. be directed to the claimed invention and encompass all of the features of the claims, giving the claims the broadest reasonable expectation;

5.3. encompass the disclosed features that may be claimed.

6. must provide in support of the petition an accelerated examination support document.

An accelerated examination support document must include:

6.1. an information disclosure statement (IDS) in compliance with 37 CFR 1.98 citing each reference deemed most closely related to the subject matter of each of the claims;

6.2. an identification of all the limitations in the claims that are disclosed by the reference specifying where the limitation is disclosed in the cited reference;

6.3. a detailed explanation of how each of the claims are patentable over the references cited with particularity required by 37 CFR 1.111(b) and (c);

6.4. a concise statement of the utility of the invention as defined in each of the independent claims (unless the application is a design application);

6.5. a showing of where each limitation of the claims finds support under 35 USC 112, first paragraph, in the written description of the specification. If applicable, the showing must also identify: (1) each means- (or step) plus-function claim element that invokes consideration under 35 UDC 112, sixth paragraph; and (2) the structure, material, or acts in the specification that corresponds to each means- (or step) plus-function claim element that invokes consideration under 35 UDC 112, sixth paragraph; if the application claims the benefit of one or more applications under title 35, United States Code, the showing must also include where each limitation of the claims finds support under 35 USC 112, first paragraph, in each such application in which such supports exists;

6.6. an identification of any cited references that may be disqualified under 35 USC 103(c).

REVIEW OF FACTS

The petition in this case fails to comply with conditions II.5.2, II.6.3 and II.6.5, above.

As to condition II.5.2, the petition lacks an indication of a preexamination search that encompasses all of the features of the claims. Specifically, with respect to the classification search, in addition to the areas already searched, the search needs to include a search of 52/391 and 52/582.2.

With respect to the required text search of the US Patents database, the search logic used by the applicant does not appear to encompass broad enough search terms to cover the claimed limitations and thus may not have located all of the most pertinent art. Search logic encompassing the "broadest reasonable interpretation" of the claimed invention is required. Specifically, limiting the search to "floor" or "flooring" rather than a panel in general is too specific. The USPTO website has an example of the proper manner of performing and documenting a preexamination search for Accelerated Examination petitions at: http://www.uspto.gov/web/patents/accelerated/. Additionally, an example of additional search terms are provided below:

panel and (tongue same groove)
panel and ((tongue or key or protrusion) and (groove or slot or receiver))
panel and (tongue and groove) and (vertical$2 or horizontal$2)
panel and ((tongue and groove) and (protrusion with tongue))

The sample of search terms are not meant to be the sole search terms that can or should be employed in this application, but is meant solely as an example for applicant's assistance. The same additions shown above for the text search can also be used in the search of foreign databases and NPL search.

As to condition II.6.3, there is not a satisfactory detailed explanation of claim patentability over each of the references. The explanation needs to specify how each of the claims (not just the independent claims) are patentable over each of the cited references, which includes the need to specify whether each of the dependent claims are separately patentable beyond the limitations contained in the independent claims, and if so how, or a statement made that the dependent claims are not separately patentable. Specifically, at least some of the dependent claims 2-11 appear to have their limitations admittedly taught by the cited prior art. In addition, any indication of patentability over the prior art references needs to take in to account any distinctions seen as being obvious over any single or a combination of cited references.

The USPTO website has an example of the proper manner of documenting limitations taught by cited art, and the manner of explaining claim patentability over the references, for an Accelerated Examination Support Document at: http://www.uspto.gov/web/patents/accelerated/.

As to condition to II.6.5, the manner of showing of where each limitation of each of the claims finds support under 35 USC 112 in the written description of the application is sufficient. However, similar support (if any) for the claimed invention must additionally be shown in any parent application upon which priority is claimed under 35 USC 119 or 35 USC 120 so that the examiner can determine an effective filing date for each claim. Specifically, support (if any) must be shown for parent application 10/970,282. Also, the support must be shown for PCT/SE2005/01586. It is unclear why the above cases are not listed. On a similar note, the Application Data Sheet (ADS) does not list 10/970,282 as a parent of this case, but does list 11/577,628 as a parent of 11/092,748. There is clearly a typo since 11/577,628 doesn't appear to exist. In general, the ADS, the first line of the specification, the search document, and the support document all seem to list different versions of the applications on which applicant is claiming support. The discrepancy should be corrected.

Therefore, the petition fails to meet the required conditions to be accorded special status under the accelerated examination procedure.

DECISION

For the above-stated reasons, the petition is **DISMISSED**. The application will therefore be taken up by the examiner for action in its regular turn.

Petitioner is given a single opportunity to perfect the petition. Any request for reconsideration of this decision must be submitted within 1 (one) month or 30 (thirty) days, whichever is longer, (no extension of time under 37 CFR 1.136(a)) from the date of this decision in order to be considered timely. Any request for reconsideration must address the deficiencies indicated above.

Petitioner is reminded that, upon granting of the special status of the application on request for reconsideration, the application will be processed expeditiously. However, due to the dismissal of the instant petition, examination may not be completed within twelve months of the filing date of the application.

Any inquiry regarding this decision should be directed to Quality Assurance Specialist Steven N. Meyers, at (571) 272-6611.

Steven N. Meyers,
Quality Assurance Specialist
Technology Center 3600

Sm/sm: 5/4/08

UNITED STATES PATENT AND TRADEMARK OFFICE

UNITED STATES DEPARTMENT OF COMMERCE
United States Patent and Trademark Office
Address: COMMISSIONER FOR PATENTS
P.O. Box 1450
Alexandria, Virginia 22313-1450
www.uspto.gov

APPLICATION NO.	FILING DATE	FIRST NAMED INVENTOR	ATTORNEY DOCKET NO.	CONFIRMATION NO.
12/051,656	03/19/2008	Darko Pervan	1033462-000191	1931

21839 7590 06/20/2008
BUCHANAN, INGERSOLL & ROONEY PC
POST OFFICE BOX 1404
ALEXANDRIA, VA 22313-1404

EXAMINER
GILBERT, WILLIAM V

ART UNIT	PAPER NUMBER
3635	

NOTIFICATION DATE	DELIVERY MODE
06/20/2008	ELECTRONIC

Please find below and/or attached an Office communication concerning this application or proceeding.

The time period for reply, if any, is set in the attached communication.

Notice of the Office communication was sent electronically on above-indicated "Notification Date" to the following e-mail address(es):

ADIPFDD@bipc.com

UNITED STATES PATENT AND TRADEMARK OFFICE

Commissioner for Patents
United States Patent and Trademark Office
P.O. Box 1450
Alexandria, VA 22313-1450
www.uspto.gov

MAILED
FROM DIRECTORS OFFICE

JUN 19 2008

TECHNOLOGY CENTER 3600

Buchanan, Ingersoll & Rooney, PC
Post Office Box 1404
Alexandria, VA 22313-1404

In re application of
Darko Pervan et al.
Application No. 12/051,656
Filed: March 19, 2008
For: MECHANICAL LOCKING SYSTEM FOR PANELS AND METHOD OF INSTALLING SAME

DECISION ON PETITION TO MAKE SPECIAL FOR NEW APPLICATION UNDER 37 CFR 1.102

This is a decision on the renewed petition filed on June 6, 2008 to make the above-identified application special for accelerated examination procedure under 37 C.F.R. § 1.102(d).

The petition to make the application special is **GRANTED**.

The application is eligible for accelerated examination and the petition complies with the conditions for granting the application special status pursuant to the "Change to Practice for Petitions in Patent Applications to Make Special and for Accelerated Examination" published June 26, 2006, in the Federal Register. (71 Fed. Reg. 36323).

The prosecution of the instant application will be conducted expeditiously according to the following guidelines.

1. The application will be docketed to an examiner and taken up for action within two weeks of the date of this decision.

2. Restriction Practice:
If the examiner determines that the claims are not directed to a single invention, a telephone request to elect one single invention will be made pursuant to MPEP 812.01. As a prerequisite to the grant of this petition, the applicant has agreed to make an oral election, by telephone, without traverse. If the applicant refuses to make an election without traverse, or the examiner cannot reach the applicant after a reasonable effort, the examiner will treat the first claimed invention (invention defined by claim 1) as having being constructively elected without traverse for examination.

3. Office action:
If it is determined that, after appropriate consultation, there is a potential rejection or any other issue to be addressed, the examiner will telephone the applicant and arrange an interview to discuss and resolve the issue. An Office action, other than a Notice of Allowance and Fee(s) Due (Notice of Allowance), will not be issued unless either: 1) an interview was conducted but did not result in agreed to action that places the application in condition for allowance, or, 2) a determination is made that an interview would be unlikely to result in the application being placed in condition for allowance, and 3) an internal conference has been held to review any rejection of any claim.

4. Time for Reply:
An Office action other than a Notice of Allowance or a final Office action will set a shortened statutory period of one month or thirty days, whichever is longer, for reply with no extension of time available under 37 CFR 1.136(a). Failure to timely file a reply within this non-extendible period for reply will result in the abandonment of the application.

5. Reply by Applicant:
A timely reply to an Office action other than the Notice of Allowance must be submitted electronically via EFS or EFS-web and limited to addressing the rejections, objections and requirement made. Any amendment that attempts to: 1) add claims which would result in more than three pending independent claims or more than twenty pending total claims; 2) present claims not encompassed by the pre-examination search or an updated accelerated examination support document; or 3) present claims that are directed to a non-elected invention or an invention other than that previously claimed and examined in the application, will be treated as not fully responsive and will not be entered.

For any amendment to the claims (including any new claim) that is not encompassed by the accelerated examination support document, applicant must provide an updated accelerated examination support document that encompasses the amended or new claims at the time of filing of the amendment.

To proceed expeditiously with the examination, it is recommended that a reply with amendments made to any claim or with any new claim being added be accompanied by an updated accelerated examination support document or a statement explaining how the amended or new claim is supported by the original accelerated examination support document.

6. Information Disclosure Statement (IDS):
Any IDS filed during prosecution must be submitted electronically via EFS or EFS-web, accompanied by an updated accelerated examination support document, and be in compliance with 37 CFR 1.97 and 1.98.

7. Post-Allowance Processing:
To expedite processing of the allowed application into a patent, the applicant must: 1) pay the required fees within one month of the date of the Notice of Allowance, and 2) not file any post allowance papers not required by the Office. In no event may the issue

fee be paid and accepted later than three months from the date of the Notice of Allowance.

8. After-Final and Appeal Procedures:
To expedite prosecution, after receiving the final Office action, applicant must: 1) promptly file a notice of appeal, an appeal brief and appeal fees; and 2) not request a pre-appeal brief conference.

Any amendment, affidavit or other evidence filed after final Office action must comply with applicable rules and the requirements outlined in numbered paragraphs 5 and 6 above.

On appeal, the application will proceed according to normal appeal procedures. After appeal, the application will again be treated special.

9. Proceedings Outside the Normal Examination Process:
If the application becomes involved in a proceeding that is outside the normal examination process (e.g., a secrecy order, national security review, interference proceeding, petitions under 37 CFR 1.181, 182 or 183), the application will be treated special before and after such proceeding.

10. Final Disposition:
The twelve month goal of this accelerated examination procedure ends with a final disposition. The mailing of a final Office action, a Notice of Allowance, the filing of a Notice of Appeal, or the filing of a Request for Continued Examination (RCE) is the final disposition.

If, during prosecution, a paper is not filed electronically using EFS-web, a reply is filed but is not fully responsive, the application is involved in an appeal, or a proceeding outside normal examination process, the application will still be examined expeditiously, however, the final disposition may occur more than twelve months from the filing of the application.

Any inquiry regarding this decision should be directed to Quality Assurance Specialist Steven N. Meyers, at (571) 272-6611.

Steven N. Meyers,
Quality Assurance Specialaist
Technology Center 3600

Sm/sm: 6/15/08

UNITED STATES PATENT AND TRADEMARK OFFICE

Commissioner for Patents
United States Patent and Trademark Office
P.O. Box 1450
Alexandria, VA 22313-1450
www.uspto.gov

AUG 0 5 2009

Birch, Stewart, Kolasch & Birch
P.O. Box 747
Falls Church, VA 22040-0747

In re application of Takuya Yamamura et al. Application No. 12/051,667 Filed: March 19, 2008 For: DEVICE OPERABLE TO DISTRIBUTE DRIVING FORCES	:	**DECISION ON REQUEST TO PARTICIPATE IN PATENT PROSECUTION HIGHWAY PROGRAM AND PETITION TO MAKE SPECIAL UNDER 37 CFR 1.102(d)**

This is a decision on the request to participate in the Patent Prosecution Highway (PPH) program and the petition under 37 CFR 1.102(d), filed July 29, 2009, to make the above-identified application special.

The request and petition are **DISMISSED**.

A grantable request to participate in the PPH pilot program and petition to make special require:

(1) The U.S. application must validly claim priority under 35 U.S.C. 119(a) to one or more applications filed in the JPO;
(2) Applicant must submit a copy of the allowable/patentable claim(s) from the JPO application(s) along with an English translation thereof and a statement that the English translation is accurate;
(3) All the claims in the U.S. application must sufficiently correspond or be amended to sufficiently correspond to the allowable/patentable claim(s) in the JPO application(s);
(4) Examination of the U.S. application has not begun;
(5) Applicant must submit a copy of the latest Office action from each of the JPO application(s) containing the allowable/patentable claim(s) along with an English translation thereof and a statement that the English translation is accurate;
(6) Applicant must submit an IDS listing the documents cited by the JPO examiner in the JPO Office action along with copies of documents except U.S. patents or U.S. patent application publications; and
(7) The required petition fee under 37 CFR 1.17(h).

The request to participate in the PPH pilot program and petition fail to include:
(3) Claims of the U.S. Application that sufficiently correspond to the allowable claims of the JPO application. Specifically, it looks like claim 1 of this application lacks the last 17 lines that are present in corresponding claim 1 of the JPO application.

Applicant is given a time period of **ONE MONTH or THIRTY DAYS**, whichever is longer, to correct the deficiencies. **NO EXTENSION OF TIME UNDER 37 CFR 1.136 IS PERMITTED.** If the deficiencies are not corrected with the time period given, the application will await action in its regular turn. All replies to a decision to dismiss must be submitted by EFS-Web using the document description "Petition to make special under Patent Prosecution Highway."

Any inquiry regarding this decision should be directed to Steven N. Meyers, Quality Assurance Specialist, at (571) 272-6611.

Steven N. Meyers,
Quality Assurance Specialist
Technology Center 3600

Sm/sm: 8/2/09

UNITED STATES PATENT AND TRADEMARK OFFICE

Commissioner for Patents
United States Patent and Trademark Office
P.O. Box 1450
Alexandria, VA 22313-1450
www.uspto.gov

SEP 0 8 2009

Birch, Stewart, Kolasch & Birch
P.O. Box 747
Falls Church, VA 22040-0747

In re application of Takuya Yamamura et al. Application No. 12/051,667 Filed: March 19, 2008 For: DEVICE OPERABLE TO DISTRIBUTE DRIVING FORCES	:	**DECISION ON REQUEST TO PARTICIPATE IN PATENT PROSECUTION HIGHWAY PROGRAM AND PETITION TO MAKE SPECIAL UNDER 37 CFR 1.102(d)**

This is a decision on the renewed request to participate in the Patent Prosecution Highway (PPH) program and the petition under 37 CFR 1.102(d), filed September 4, 2009, to make the above-identified application special.

The request and petition are **GRANTED**.

A grantable request to participate in the PPH program and petition to make special require:

(1) The U.S. application must validly claim priority under 35 U.S.C. 119(a) to one or more applications filed in the JPO;
(2) Applicant must submit a copy of the allowable/patentable claim(s) from the JPO application(s) along with an English translation thereof and a statement that the English translation is accurate;
(3) All the claims in the U.S. application must sufficiently correspond or be amended to sufficiently correspond to the allowable/patentable claim(s) in the JPO application(s);
(4) Examination of the U.S. application has not begun;
(5) Applicant must submit a copy of the latest Office action from each of the JPO application(s) containing the allowable/patentable claim(s) along with an English translation thereof and a statement that the English translation is accurate;
(6) Applicant must submit an IDS listing the documents cited by the JPO examiner in the JPO Office action along with copies of documents except U.S. patents or U.S. patent application publications; and
(7) The required petition fee under 37 CFR 1.17(h).

In light of renewed petition, which includes a preliminary amendment that amended the claims to precisely correspond to the above-noted allowed JPO claims, the request to participate in the PPH program complies with the above requirements. Therefore, the above-identified application has been accorded "special" status.

All other inquiries concerning the examination or status of the application should be directed to the Patent Application Information Retrieval (PAIR) system.

The application is being forwarded to the examiner for action on the merits commensurate with this decision.

Any inquiry regarding this decision should be directed to Steven N. Meyers, Quality Assurance Specialist, at (571) 272-6611.

Steven N. Meyers,
Quality Assurance Specialist
Technology Center 3600

Sm/sm: 9/6/09

UNITED STATES PATENT AND TRADEMARK OFFICE

Commissioner for Patents
United States Patent and Trademark Office
P.O. Box 1450
Alexandria, VA 22313-1450
www.uspto.gov

BIRCH STEWART KOLASCH & BIRCH
PO BOX 747
FALLS CHURCH, VA 22040-0747

MAILED

JUN 11 2009

OFFICE OF PETITIONS
ON PETITION

In re Application of :
Tetsuya Ori :
Application No. 12/051,672 :
Filed: March 19, 2008 :
Attorney Docket No. 0649-1685PUS1

This is a decision on the petition, filed June 9, 2009 under 37 CFR 1.313(c)(2) to withdraw the above-identified application from issue after payment of the issue fee.

The petition is **GRANTED**.

The above-identified application is withdrawn from issue for consideration of a submission under 37 CFR 1.114 (request for continued examination). See 37 CFR 1.313(c)(2).

Petitioner is advised that the issue fee paid on June 1, 2009 in the above-identified application cannot be refunded. If, however, the above-identified application is again allowed, petitioner may request that it be applied towards the issue fee required by the new Notice of Allowance.[1]

Telephone inquiries should be directed to Irvin Dingle at (571) 272-3210.

This matter is being referred to Technology Center AU 2873 for processing of the request for continued examination under 37 CFR 1.114 and for consideration of the concurrently filed Information Disclosure Statement.

/Irvin Dingle/
Irvin Dingle
Petitions Examiner
Office of Petitions

---

[1] The request to apply the issue fee to the new Notice may be satisfied by completing and returning the new Issue Fee Transmittal Form PTOL-85(b), which includes the following language thereon: Commissioner for Patents is requested to apply the Issue Fee and Publication Fee (if any) or re-apply any previously paid issue fee to the application identified above. Petitioner is advised that, whether a fee is indicated as being due or not, the Issue Fee Transmittal Form **must** be completed and timely submitted to avoid abandonment. Note the language in bold text on the first page of the Notice of Allowance and Fee(s) Due (PTOL-85).

UNITED STATES PATENT AND TRADEMARK OFFICE

UNITED STATES DEPARTMENT OF COMMERCE
United States Patent and Trademark Office
Address: COMMISSIONER FOR PATENTS
P.O. Box 1450
Alexandria, Virginia 22313-1450
www.uspto.gov

APPLICATION NO.	FILING DATE	FIRST NAMED INVENTOR	ATTORNEY DOCKET NO.	CONFIRMATION NO.
12/051,692	03/19/2008	Takami MIURA	0649-1704PUS1	1990

2292 7590 01/08/2009
BIRCH STEWART KOLASCH & BIRCH
PO BOX 747
FALLS CHURCH, VA 22040-0747

EXAMINER

ART UNIT	PAPER NUMBER
3664	

NOTIFICATION DATE	DELIVERY MODE
01/08/2009	ELECTRONIC

Please find below and/or attached an Office communication concerning this application or proceeding.

The time period for reply, if any, is set in the attached communication.

Notice of the Office communication was sent electronically on above-indicated "Notification Date" to the following e-mail address(es):

mailroom@bskb.com

UNITED STATES PATENT AND TRADEMARK OFFICE

Commissioner for Patents
United States Patent and Trademark Office
P.O. Box 1450
Alexandria, VA 22313-1450
www.uspto.gov

JAN 07 2009

Birch, Stewart, Kolasch & Birch
P.O. Box 747
Falls Church, VA 22040-0747

In re application of Takami Miura et al. Application No. 12/051,692 Filed: March 19, 2008 For: DEVICE OPERABLE TO CONTROL TURNING OF VEHICLE	: : : : : : :	**DECISION ON REQUEST TO PARTICIPATE IN PATENT PROSECUTION HIGHWAY PROGRAM AND PETITION TO MAKE SPECIAL UNDER 37 CFR 1.102(d)**

This is a decision on the request to participate in the Patent Prosecution Highway (PPH) program and the petition under 37 CFR 1.102(d), filed December 18, 2008, to make the above-identified application special.

The request and petition are **GRANTED**.

A grantable request to participate in the PPH program and petition to make special require:

(1) The U.S. application must validly claim priority under 35 U.S.C. 119(a) to one or more applications filed in the JPO;
(2) Applicant must submit a copy of the allowable/patentable claim(s) from the JPO application(s) along with an English translation thereof and a statement that the English translation is accurate;
(3) All the claims in the U.S. application must sufficiently correspond or be amended to sufficiently correspond to the allowable/patentable claim(s) in the JPO application(s);
(4) Examination of the U.S. application has not begun;
(5) Applicant must submit a copy of the latest Office action from each of the JPO application(s) containing the allowable/patentable claim(s) along with an English translation thereof and a statement that the English translation is accurate;
(6) Applicant must submit an IDS listing the documents cited by the JPO examiner in the JPO Office action along with copies of documents except U.S. patents or U.S. patent application publications; and
(7) The required petition fee under 37 CFR 1.17(h).

In light of the preliminary amendment filed December 18, 2008 with the petition, the request to participate in the PPH program complies with the above requirements. Therefore, the above-identified application has been accorded "special" status.

All other inquiries concerning the examination or status of the application should be directed to the Patent Application Information Retrieval (PAIR) system.

The application is being forwarded to the examiner for action on the merits commensurate with this decision.

Any inquiry regarding this decision should be directed to Steven N. Meyers, Quality Assurance Specialist, at (571) 272-6611.

Steven N. Meyers,
Quality Assurance Specialist
Technology Center 3600

Sm/sm: 1/6/09

UNITED STATES PATENT AND TRADEMARK OFFICE

Commissioner for Patents
United States Patent and Trademark Office
P.O. Box 1450
Alexandria, VA 22313-1450
www.uspto.gov

HENSLEY KIM & HOLZER, LLC
1660 LINCOLN STREET
SUITE 3000
DENVER CO 80264

MAILED

NOV 10 2009

OFFICE OF PETITIONS

In re Application of	:	
W. Jeffrey Mitchem, et al.	:	
Application No. 12/051,707	:	DECISION GRANTING PETITION
Filed: March 19, 2008	:	UNDER 37 CFR 1.313(c)(2)
Attorney Docket No. 233-536-CP1	:	

This is a decision on the petition under 37 CFR 1.313(c)(2), filed, November 9, 2009 to withdraw the above-identified application from issue after payment of the issue fee.

The petition is **GRANTED**.

The above-identified application is withdrawn from issue for consideration of a submission under 37 CFR 1.114 (request for continued examination). *See* 37 CFR 1.313(c)(2).

Petitioner is advised that the issue fee paid on October 13, 2009 cannot be refunded. If, however, this application is again allowed, petitioner may request that it be applied towards the issue fee required by the new Notice of Allowance.[1]

Telephone inquiries should be directed to Terri Johnson at (571) 272-2991.

This application is being referred to Technology Center AU 2416 for processing of the request for continued examination under 37 CFR 1.114 and for consideration of the concurrently filed information disclosure statement.

Terri Johnson
Petitions Examiner
Office of Petitions

---

[1] *The request to apply the issue fee to the new Notice may be satisfied by completing and returning the new Part B – Fee(s) Transmittal Form (along with any balance due at the time of submission). Petitioner is advised that the Issue Fee Transmittal Form* ***must*** *be completed and timely submitted to avoid abandonment of the application.*

UNITED STATES PATENT AND TRADEMARK OFFICE

Commissioner for Patents
United States Patent and Trademark Office
P.O. Box 1450
Alexandria, VA 22313-1450
www.uspto.gov

MICHAEL R. WARD
MORRISON & FOERSTER, LLP
425 MARKET STREET
SAN FRANCISCO, CA 94105-2482

MAILED

MAR 13 2009

OFFICE OF PETITIONS

In re Application of	:	
Rudi E. Moerck, et al.	:	
Application No. 12/051,726	:	DECISION ON PETITION
Filed: March 19, 2008	:	TO WITHDRAW
Attorney Docket No. 633382000210	:	FROM RECORD
	:	

This is a decision on the Request to Withdraw as attorney or agent under 37 C.F.R. § 1.36(b) filed December 16, 2008.

The request is **NOT APPROVED**.

A review of the file record indicates that Morrison & Foerster, LLP does not have power of attorney in this patent application. See 37 C.F.R. § 10.40. Accordingly, the request to withdraw under 37 C.F.R. § 1.36(b) is not applicable.

All future communications from the Office will continue to be directed to the below-listed address until otherwise properly notified by the applicant.

Telephone inquires concerning this decision should be directed to undersigned at 571-272-1642.

/AMW/
April M. Wise
Petitions Examiner
Office of Petitions

cc: RUDI E. MOERCK
25107 CALLAWAY
SAN ANTONIO, TX 78258

UNITED STATES PATENT AND TRADEMARK OFFICE

Commissioner for Patents
United States Patent and Trademark Office
P.O. Box 1450
Alexandria, VA 22313-1450
www.uspto.gov

In re Application of
Clark Barton Keck

Application No. 12051742

Filed:

Attorney Docket No. 1651.001

:DECISION ON PETITION TO MAKE SPECIAL
:UNDER 37 CFR 1.102(c)(1)

This is a decision on the electronic petition under 37 CFR 1.102 (c)(1) ,filed 20-MAR-2008 to make the above-identified application special based on applicant's age as set forth in MPEP § 708.02, Section IV.

The petition is **GRANTED**.

A grantable petition to make an application special under 37 CFR 1.102(c)(1), MPEP § 708.02, Section IV: Applicant's Age must include a statement by applicant or a registered practitioner having evidence that applicant is at least 65 years of age. No fee is required.

Accordingly, the above-identified application has been accorded “special” status and will be taken up for action by the examiner upon the completion of all pre-examination processing.

Telephone inquires concerning this electronic decision should be directed to the Electronic Business Center at 866-217-9197.

All other inquires concerning either the examination or status of the application should be directed to the Technology Center.

PTO/SB/130 (03-08)
Approved for use through 03/31/2008. OMB 0651- 0031
U.S. Patent and Trademark Office; U.S. DEPARTMENT OF COMMERCE
Under the Paperwork Reduction Act of 1995, no persons are required to respond to a collection of information unless it contains a valid OMB control number

PETITION TO MAKE SPECIAL BASED ON AGE FOR ADVANCEMENT OF EXAMINATION UNDER 37 CFR 1.102(c)(1)

Application Information

Application Number	12051742	Confirmation Number	1072	Filing Date	2008-03-19
Attorney Docket Number (optional)	1651.01	Art Unit		Examiner	
First Named Inventor	Clark Barton Keck				
Title of Invention	WEAR RESISTANT COLLAR FOR SUB ASSEMBLY				

Attention: Office of Petitions

An application may be made special for advancement of examination upon filing of a petition showing that the applicant is 65 years of age, or more. No fee is required with such a petition. See 37 CFR 1.102(c)(1) and MPEP 708.02 (IV).

APPLICANT HEREBY PETITIONS TO MAKE SPECIAL FOR ADVANCEMENT OF EXAMINATION IN THIS APPLICATION UNDER 37 CFR 1.102(c)(1) and MPEP 708.02 (IV) ON THE BASIS OF THE APPLICANT'S AGE.

A grantable petition requires one of the following items:
(1) Statement by one named inventor in the application that he/she is 65 years of age, or more; or
(2) Certification by a registered attorney/agent having evidence such as a birth certificate, passport, driver's license, etc. showing one named inventor in the application is 65 years of age, or more.

Name of Inventor who is 65 years of age, or older

Given Name	Middle Name	Family Name	Suffix
Clark	Barton	Keck	

A signature of the applicant or representative is required in accordance with 37 CFR 1.33 and 10.18.
Please see 37 CFR 1.4(d) for the format of the signature.

Select (1) or (2) :

○ (1) I am an inventor in this application and I am 65 years of age, or more.

◉ (2) I am an attorney or agent registered to practice before the Patent and Trademark Office, and I certify that I am in possession of evidence, and will retain such in the application file record, showing that the inventor listed above is 65 years of age, or more.

Signature	/WendyBuskop/	Date (YYYY-MM-DD)	2008-03-19
Name	Wendy Buskop	Registration Number	32202

PTO/SB/130 (03-08)
Approved for use through 03/31/2008. OMB 0651- 0031
U.S. Patent and Trademark Office; U.S. DEPARTMENT OF COMMERCE
Under the Paperwork Reduction Act of 1995, no persons are required to respond to a collection of information unless it contains a valid OMB control number

Privacy Act Statement

The Privacy Act of 1974 (P.L. 93-579) requires that you be given certain information in connection with your submission of the attached form related to a patent application or patent. Accordingly, pursuant to the requirements of the Act, please be advised that: (1) the general authority for the collection of this information is 35 U.S.C. 2(b)(2); (2) furnishing of the information solicited is voluntary; and (3) the principal purpose for which the information is used by the U.S. Patent and Trademark Office is to process and/or examine your submission related to a patent application or patent. If you do not furnish the requested information, the U.S. Patent and Trademark Office may not be able to process and/or examine your submission, which may result in termination of proceedings or abandonment of the application or expiration of the patent.

The information provided by you in this form will be subject to the following routine uses:

1. The information on this form will be treated confidentially to the extent allowed under the Freedom of Information Act (5 U.S.C. 552) and the Privacy Act (5 U.S.C. 552a). Records from this system of records may be disclosed to the Department of Justice to determine whether the Fr eedom of Information Act requires disclosure of these records.

2. A record from this system of records may be disclosed, as a routine use, in the course of presenting evidence to a court, magistrate, or administrative tribunal, including disclosures to opposing counsel in the course of settlement negotiations.

3. A record in this system of records may be disclosed, as a routine use, to a Member of Congress submitting a request involving an individual, to whom the record pertains, when the individual has requested assistance from the Member with respect to the subject matter of the record.

4. A record in this system of records may be disclosed, as a routine use, to a contractor of the Agency having need for the information in order to perform a contract. Recipients of information shall be required to comply with the requirements of the Privacy Act of 1974, as amended, pursuant to 5 U.S.C. 552a(m).

5. A record related to an International Application filed under the Patent Cooperation Treaty in this system of records may be disclosed, as a routine use, to the International Bureau of the World Intellectual Property Organization, pursuant to the Patent Cooperation Treaty.

6. A record in this system of records may be disclosed, as a routine use, to another federal agency for purposes of National Security review (35 U.S.C. 181) and for review pursuant to the Atomic Energy Act (42 U.S.C. 218(c)).

7. A record from this system of records may be disclosed, as a routine use, to the Administrator, General Services, or his/her designee, during an inspection of records conducted by GSA as part of that agency's responsibility to recommend improvements in records management practices and programs, under authority of 44 U.S.C. 2904 and 2906. Such disclosure shall be made in accordance with the GSA regulations governing inspection of records for this purpose, and any other relevant (i.e., GSA or Commerce) directive. Such disclosure shall not be used to make determinations about indivi duals.

8. A record from this system of records may be disclosed, as a routine use, to the public after either publication of the application pursuant to 35 U.S.C. 122(b) or issuance of a patent pursuant to 35 U.S.C. 151. Further, a record may be disclosed, subject to the limitations of 37 CFR 1.14, as a routine use, to the public if the record was filed in an application which became abandoned or in which the proceedings were terminated and which application is referenced by either a published application, an application open to public inspections or an issued patent.

9. A record from this system of records may be disclosed, as a routine use, to a Federal, State, or local law enforcement agency, if the USPTO becomes aware of a violation or potential violation of law or regulation.

UNITED STATES PATENT AND TRADEMARK OFFICE

Commissioner for Patents
United States Patent and Trademark Office
P.O. Box 1450
Alexandria, VA 22313-1450
www.uspto.gov

PERKINS COIE LLP
P.O. BOX 1208
SEATTLE WA 98111-1208

COPY MAILED

SEP 2 6 2008

OFFICE OF PETITIONS

In re Application of	:	DECISION REFUSING STATUS
Prabir et al.	:	UNDER 37 CFR 1.47(a)
Application No. 12/051,753	:	
Filed: March 19, 2008	:	
Attorney Docket No. 36321-8048.US01	:	

This is in response to the petition under 37 CFR 1.47(a), filed September 8, 2008.

The petition is dismissed.

Rule 47 applicant is given TWO MONTHS from the mailing date of this decision to reply, correcting the below-noted deficiencies. Any reply should be entitled "Request for Reconsideration of Petition Under 37 CFR 1.47(a)," and should only address the deficiencies noted below, except that the reply may include an oath or declaration executed by the non-signing inventor. **FAILURE TO RESPOND WILL RESULT IN ABANDONMENT OF THE APPLICATION.** Any extensions of time will be governed by 37 CFR 1.136(a).

A grantable petition under 37 CFR 1.47(a) requires: (1) proof that the non-signing inventor cannot be reached or refuses to sign the oath or declaration after having been presented with the application papers (specification, claims and drawings); (2) an acceptable oath or declaration in compliance with 35 U.S.C. §§ 115 and 116; (3) the petition fee; and (4) a statement of the last known address of the non-signing inventor. Applicant lacks item(s) (1) set forth above.

As to item (1), rule 47 applicant must demonstrate with documented evidence that an inventor refuses to join in the application after having been presented with the application papers (specification, claims, drawings and oath or declaration). There is no indication herein that joint inventor Metzger was presented with a copy of the complete application papers for this application. From the evidence of record, it only appears that the inventor was presented with a copy of the assignment, declaration and power of attorney. If the inventor was not presented with a copy of the application papers for this application, then the joint inventor could not attest that they have "reviewed and understand the application papers" and could not execute the declaration they were requested to sign. Did the inventor receive a copy of the application papers? The fact that an application may contain proprietary information does not relieve the rule 47 applicant of the responsibility to present the application papers to the joint inventors if the inventors are willing to receive the papers in order to sign the oath or declaration. Unless petitioner can show that a copy of the application papers was presented to the joint inventor, then petitioner will have to mail a copy of the complete application papers (specification, claims and drawings) to the last

known address of the joint inventors, return receipt requested. A cover letter of instructions should accompany the mailing of the application papers setting a deadline or a statement that no response will constitute a refusal. This sort of ultimatum lends support to a finding of refusal by conduct. **The proof of the pertinent events should be made by a statement of someone with firsthand knowledge of the events and should include documentary evidence, such as certified mail return receipt, cover letter of instructions, telegram, etc.** *See* MPEP 409.03(d).

Where there is an express or oral refusal, that fact, along with the time and place of the refusal, must be stated in an affidavit or declaration **by the party to whom the refusal was made.** Where there is a written refusal, a copy of the document(s) evidencing that refusal must be made part of the affidavit or declaration.

When it is concluded by the rule 47 applicant that an omitted inventor's conduct constitutes a refusal, all facts upon which that conclusion is based should be stated in an affidavit or declaration. If there is documentary evidence to support facts alleged in the affidavit or declaration, such evidence must be submitted.

Whenever an omitted inventor gives a reason for refusing to sign the application oath or declaration, that reason should be stated in the affidavit or declaration.

The application file does not indicate a change of address has been filed in this case, although the address given on the petition differs from the address of record. A change of address should be filed in this case in accordance with MPEP 601.03. A courtesy copy of this decision is being mailed to the address noted on the petition. However, until otherwise instructed, all future correspondence regarding this application will be mailed solely to the address of record.

Further correspondence with respect to this matter should be addressed as follows:

By mail: Mail Stop PETITIONS
Commissioner for Patents
Post Office Box 1450
Alexandria, VA 22313-1450

By hand: Customer Service Window
Mail Stop Petitions
Randolph Building
401 Dulany Street
Alexandria, VA 22314

By fax: (571) 273-8300
ATTN: Office of Petitions

Telephone inquiries should be directed to the undersigned at (571) 272-3215.

Charlema Grant

Charlema Grant
Petitions Attorney
Office of Petitions

Cc: Drinker, Biddle & Reath LLP
One Logan Square
18th and Cherry Streets
Philadelphia, PA 19103

UNITED STATES PATENT AND TRADEMARK OFFICE

Commissioner for Patents
United States Patent and Trademark Office
P.O. Box 1450
Alexandria, VA 22313-1450
www.uspto.gov

Gregory J. Lavorgna, Esquire
Drinker Biddle & Reath LLP
One Logan Square
18th & Cherry Streets
Philadelphia PA 19103-6996

COPY MAILED

DEC 19 2008

OFFICE OF PETITIONS

In re Application of Brian Metzger and Venkitachalam Gopalakrishnan Application No. 12/051,753 Filed: March 19, 2008 Attorney Docket No. 36321-8048.US01	: : : : :	DECISION NOTING JOINDER OF INVENTOR AND PETITION UNDER 37 CFR 1.47(a)

Papers filed on November 26, 2008 in response to a "Decision Refusing Status Under 37 CFR 1.47(a)," mailed September 26, 2008, included a Declaration signed by a previously non-signing inventor, Metzger, in compliance with 37 CFR 1.63.

The petition is **DISMISSED AS MOOT**.

In view of the joinder of the inventor, further consideration under § 1.47(a) is not necessary. This application does not have any Rule 1.47 status and no such status should appear on the record for this file. This application need not be returned to this Office for any further consideration under 37 CFR 1.47(a).

This application is being referred to the Office of Patent Application Processing for pre-examination processing.

Telephone inquiries should be directed to the undersigned at (571) 272-3215.

Charlema Grant
Petitions Attorney
Office of Petitions

UNITED STATES PATENT AND TRADEMARK OFFICE

Commissioner for Patents
United States Patent and Trademark Office
P.O. Box 1450
Alexandria, VA 22313-1450
www.uspto.gov

DICKSTEIN SHAPIRO LLP
1825 EYE STREET NW
WASHINGTON, DC 20006-5403

COPY MAILED

APR 11 2008

OFFICE OF PETITIONS

In re Application of
JANNING, John L.
Application No. 12/051,755
Filed: March 19, 2008
Attorney Docket No. **J5460.0033/P033**

DECISION ON PETITION
TO MAKE SPECIAL UNDER
37 CFR 1.102(c)(1)

This is a decision on the petition under 37 CFR 1.102(c)(1), filed March 19, 2008, to make the above-identified application special based on applicant's age as set forth in M.P.E.P. § 708.02, Section IV.

The petition is **GRANTED.**

A grantable petition to make an application special under 37 CFR 1.102(c)(1) and MPEP § 708.02, Section IV: Applicant's Age must be accompanied by evidence showing that at least one of the applicants is 65 years of age, or more, such as a birth certificate or a statement by applicant. No fee is required

The instant petition includes the birth certificate of inventor John L. Janning, attesting to her age. Accordingly, the above-identified application will be accorded "special" status.

Inquiries concerning either the examination or status of the application should be directed to the Office of Patent Application Processing at 571-272-4000.

Telephone inquiries concerning this decision should be directed to the undersigned at 571-272-7253.

The application is being forwarded to the office of Patent Application Processing. This application will be accorded "special" status when pre-examination processing is done.

Monica A. Graves
Petitions Examiner
Office of Petitions

PTO/SB/130 (03-08)
Approved for use through 03/31/2008. OMB 0651- 0031
U.S. Patent and Trademark Office; U.S. DEPARTMENT OF COMMERCE
Under the Paperwork Reduction Act of 1995, no persons are required to respond to a collection of information unless it contains a valid OMB control number

PETITION TO MAKE SPECIAL BASED ON AGE FOR ADVANCEMENT OF EXAMINATION UNDER 37 CFR 1.102(c)(1)

Application Information

Application Number	12051759	Confirmation Number	1096	Filing Date	2008-03-19
Attorney Docket Number (optional)	1651.02	Art Unit		Examiner	
First Named Inventor	Clark Barton Keck				
Title of Invention	WEAR RESISTANT SLEEVE FOR SUB ASSEMBLY				

Attention: Office of Petitions

An application may be made special for advancement of examination upon filing of a petition showing that the applicant is 65 years of age, or more. No fee is required with such a petition. See 37 CFR 1.102(c)(1) and MPEP 708.02 (IV).

APPLICANT HEREBY PETITIONS TO MAKE SPECIAL FOR ADVANCEMENT OF EXAMINATION IN THIS APPLICATION UNDER 37 CFR 1.102(c)(1) and MPEP 708.02 (IV) ON THE BASIS OF THE APPLICANT'S AGE.

A grantable petition requires one of the following items:
(1) Statement by one named inventor in the application that he/she is 65 years of age, or more; or
(2) Certification by a registered attorney/agent having evidence such as a birth certificate, passport, driver's license, etc. showing one named inventor in the application is 65 years of age, or more.

Name of Inventor who is 65 years of age, or older

Given Name	Middle Name	Family Name	Suffix
Clark	Barton	Keck	

A signature of the applicant or representative is required in accordance with 37 CFR 1.33 and 10.18.
Please see 37 CFR 1.4(d) for the format of the signature.

Select (1) or (2) :

○ (1) I am an inventor in this application and I am 65 years of age, or more.

◉ (2) I am an attorney or agent registered to practice before the Patent and Trademark Office, and I certify that I am in possession of evidence, and will retain such in the application file record, showing that the inventor listed above is 65 years of age, or more.

Signature	/WendyBuskop/	Date (YYYY-MM-DD)	2008-03-19
Name	Wendy Buskop	Registration Number	32202

PTO/SB/130 (03-08)
Approved for use through 03/31/2008. OMB 0651- 0031
U.S. Patent and Trademark Office; U.S. DEPARTMENT OF COMMERCE
Under the Paperwork Reduction Act of 1995, no persons are required to respond to a collection of information unless it contains a valid OMB control number

Privacy Act Statement

The Privacy Act of 1974 (P.L. 93-579) requires that you be given certain information in connection with your submission of the attached form related to a patent application or patent. Accordingly, pursuant to the requirements of the Act, please be advised that: (1) the general authority for the collection of this information is 35 U.S.C. 2(b)(2); (2) furnishing of the information solicited is voluntary; and (3) the principal purpose for which the information is used by the U.S. Patent and Trademark Office is to process and/or examine your submission related to a patent application or patent. If you do not furnish the requested information, the U.S. Patent and Trademark Office may not be able to process and/or examine your submission, which may result in termination of proceedings or abandonment of the application or expiration of the patent.

The information provided by you in this form will be subject to the following routine uses:

1. The information on this form will be treated confidentially to the extent allowed under the Freedom of Information Act (5 U.S.C. 552) and the Privacy Act (5 U.S.C. 552a). Records from this system of records may be disclosed to the Department of Justice to determine whether the Fr eedom of Information Act requires disclosure of these records.

2. A record from this system of records may be disclosed, as a routine use, in the course of presenting evidence to a court, magistrate, or administrative tribunal, including disclosures to opposing counsel in the course of settlement negotiations.

3. A record in this system of records may be disclosed, as a routine use, to a Member of Congress submitting a request involving an individual, to whom the record pertains, when the individual has requested assistance from the Member with respect to the subject matter of the record.

4. A record in this system of records may be disclosed, as a routine use, to a contractor of the Agency having need for the information in order to perform a contract. Recipients of information shall be required to comply with the requirements of the Privacy Act of 1974, as amended, pursuant to 5 U.S.C. 552a(m).

5. A record related to an International Application filed under the Patent Cooperation Treaty in this system of records may be disclosed, as a routine use, to the International Bureau of the World Intellectual Property Organization, pursuant to the Patent Cooperation Treaty.

6. A record in this system of records may be disclosed, as a routine use, to another federal agency for purposes of National Security review (35 U.S.C. 181) and for review pursuant to the Atomic Energy Act (42 U.S.C. 218(c)).

7. A record from this system of records may be disclosed, as a routine use, to the Administrator, General Services, or his/her designee, during an inspection of records conducted by GSA as part of that agency's responsibility to recommend improvements in records management practices and programs, under authority of 44 U.S.C. 2904 and 2906. Such disclosure shall be made in accordance with the GSA regulations governing inspection of records for this purpose, and any other relevant (i.e., GSA or Commerce) directive. Such disclosure shall not be used to make determinations about indivi duals.

8. A record from this system of records may be disclosed, as a routine use, to the public after either publication of the application pursuant to 35 U.S.C. 122(b) or issuance of a patent pursuant to 35 U.S.C. 151. Further, a record may be disclosed, subject to the limitations of 37 CFR 1.14, as a routine use, to the public if the record was filed in an application which became abandoned or in which the proceedings were terminated and which application is referenced by either a published application, an application open to public inspections or an issued patent.

9. A record from this system of records may be disclosed, as a routine use, to a Federal, State, or local law enforcement agency, if the USPTO becomes aware of a violation or potential violation of law or regulation.

UNITED STATES PATENT AND TRADEMARK OFFICE

Commissioner for Patents
United States Patent and Trademark Office
P.O. Box 1450
Alexandria, VA 22313-1450
www.uspto.gov

In re Application of
Clark Barton Keck

Application No. 12051759

Filed:

Attorney Docket No. 1651.002

:DECISION ON PETITION TO MAKE SPECIAL
:UNDER 37 CFR 1.102(c)(1)

This is a decision on the electronic petition under 37 CFR 1.102 (c)(1) ,filed 20-MAR-2008 to make the above-identified application special based on applicant's age as set forth in MPEP § 708.02, Section IV.

The petition is **GRANTED**.

A grantable petition to make an application special under 37 CFR 1.102(c)(1), MPEP § 708.02, Section IV: Applicant's Age must include a statement by applicant or a registered practitioner having evidence that applicant is at least 65 years of age. No fee is required.

Accordingly, the above-identified application has been accorded “special” status and will be taken up for action by the examiner upon the completion of all pre-examination processing.

Telephone inquires concerning this electronic decision should be directed to the Electronic Business Center at 866-217-9197.

All other inquires concerning either the examination or status of the application should be directed to the Technology Center.

UNITED STATES PATENT AND TRADEMARK OFFICE

UNITED STATES DEPARTMENT OF COMMERCE
United States Patent and Trademark Office
Address: COMMISSIONER FOR PATENTS
P.O. Box 1450
Alexandria, Virginia 22313-1450
www.uspto.gov

APPLICATION NO.	FILING DATE	FIRST NAMED INVENTOR	ATTORNEY DOCKET NO.	CONFIRMATION NO.
12/051,764	03/19/2008	Tae-seung Cho	60426/S1187	1107

7590 11/04/2009
CHRISTIE, PARKER & HALE, LLP
PO BOX 7068
PASADENA, CA 91109-7068

EXAMINER
COUGHLIN, ANDREW J

ART UNIT	PAPER NUMBER
2889	

MAIL DATE	DELIVERY MODE
11/04/2009	PAPER

DECISION GRANTING PETITION UNDER 37 CFR 1.138(d)

The declaration of express abandonment is recognized

This is in response to the petition under 37 CFR 1.138(d), requesting for a refund of any previously paid search fee and excess claims fee in the above-identified application.

The petition is granted.

The express abandonment is recognized. Any previously paid search fee and excess claims fee are hereby refunded.

Telephone inquiries should be directed to the Office of Data Management at (571) 272-4200.

Nioni Farmer

Patent Publication Branch
Office of Data Management

Adjustment date: 11/05/2009 NFARMER
03/20/2008 INTEFSW 00004066 031728 12051764
02 FC:1111 510.00 CR

FORM PET651G (Rev. 08/07)

PTO/SB/130 (03-08)
Approved for use through 03/31/2008. OMB 0651- 0031
U.S. Patent and Trademark Office; U.S. DEPARTMENT OF COMMERCE
Under the Paperwork Reduction Act of 1995, no persons are required to respond to a collection of information unless it contains a valid OMB control number

PETITION TO MAKE SPECIAL BASED ON AGE FOR ADVANCEMENT OF EXAMINATION UNDER 37 CFR 1.102(c)(1)

Application Information

Application Number	12051767	Confirmation Number	1113	Filing Date	2008-03-19
Attorney Docket Number (optional)	1651.003	Art Unit		Examiner	
First Named Inventor	Clark Barton Keck				
Title of Invention	WEAR RESISTANT SUB ASSEMBLY				

Attention: Office of Petitions

An application may be made special for advancement of examination upon filing of a petition showing that the applicant is 65 years of age, or more. No fee is required with such a petition. See 37 CFR 1.102(c)(1) and MPEP 708.02 (IV).

APPLICANT HEREBY PETITIONS TO MAKE SPECIAL FOR ADVANCEMENT OF EXAMINATION IN THIS APPLICATION UNDER 37 CFR 1.102(c)(1) and MPEP 708.02 (IV) ON THE BASIS OF THE APPLICANT'S AGE.

A grantable petition requires one of the following items:
(1) Statement by one named inventor in the application that he/she is 65 years of age, or more; or
(2) Certification by a registered attorney/agent having evidence such as a birth certificate, passport, driver's license, etc. showing one named inventor in the application is 65 years of age, or more.

Name of Inventor who is 65 years of age, or older

Given Name	Middle Name	Family Name	Suffix
Clark	Barton	Keck	

A signature of the applicant or representative is required in accordance with 37 CFR 1.33 and 10.18.
Please see 37 CFR 1.4(d) for the format of the signature.

Select (1) or (2) :

○ (1) I am an inventor in this application and I am 65 years of age, or more.

◉ (2) I am an attorney or agent registered to practice before the Patent and Trademark Office, and I certify that I am in possession of evidence, and will retain such in the application file record, showing that the inventor listed above is 65 years of age, or more.

Signature	/WendyBuskop/	Date (YYYY-MM-DD)	2008-03-19
Name	Wendy Buskop	Registration Number	32202

PTO/SB/130 (03-08)
Approved for use through 03/31/2008. OMB 0651- 0031
U.S. Patent and Trademark Office; U.S. DEPARTMENT OF COMMERCE
Under the Paperwork Reduction Act of 1995, no persons are required to respond to a collection of information unless it contains a valid OMB control number

Privacy Act Statement

The Privacy Act of 1974 (P.L. 93-579) requires that you be given certain information in connection with your submission of the attached form related to a patent application or patent. Accordingly, pursuant to the requirements of the Act, please be advised that: (1) the general authority for the collection of this information is 35 U.S.C. 2(b)(2); (2) furnishing of the information solicited is voluntary; and (3) the principal purpose for which the information is used by the U.S. Patent and Trademark Office is to process and/or examine your submission related to a patent application or patent. If you do not furnish the requested information, the U.S. Patent and Trademark Office may not be able to process and/or examine your submission, which may result in termination of proceedings or abandonment of the application or expiration of the patent.

The information provided by you in this form will be subject to the following routine uses:

1. The information on this form will be treated confidentially to the extent allowed under the Freedom of Information Act (5 U.S.C. 552) and the Privacy Act (5 U.S.C. 552a). Records from this system of records may be disclosed to the Department of Justice to determine whether the Fr eedom of Information Act requires disclosure of these records.

2. A record from this system of records may be disclosed, as a routine use, in the course of presenting evidence to a court, magistrate, or administrative tribunal, including disclosures to opposing counsel in the course of settlement negotiations.

3. A record in this system of records may be disclosed, as a routine use, to a Member of Congress submitting a request involving an individual, to whom the record pertains, when the individual has requested assistance from the Member with respect to the subject matter of the record.

4. A record in this system of records may be disclosed, as a routine use, to a contractor of the Agency having need for the information in order to perform a contract. Recipients of information shall be required to comply with the requirements of the Privacy Act of 1974, as amended, pursuant to 5 U.S.C. 552a(m).

5. A record related to an International Application filed under the Patent Cooperation Treaty in this system of records may be disclosed, as a routine use, to the International Bureau of the World Intellectual Property Organization, pursuant to the Patent Cooperation Treaty.

6. A record in this system of records may be disclosed, as a routine use, to another federal agency for purposes of National Security review (35 U.S.C. 181) and for review pursuant to the Atomic Energy Act (42 U.S.C. 218(c)).

7. A record from this system of records may be disclosed, as a routine use, to the Administrator, General Services, or his/her designee, during an inspection of records conducted by GSA as part of that agency's responsibility to recommend improvements in records management practices and programs, under authority of 44 U.S.C. 2904 and 2906. Such disclosure shall be made in accordance with the GSA regulations governing inspection of records for this purpose, and any other relevant (i.e., GSA or Commerce) directive. Such disclosure shall not be used to make determinations about indivi duals.

8. A record from this system of records may be disclosed, as a routine use, to the public after either publication of the application pursuant to 35 U.S.C. 122(b) or issuance of a patent pursuant to 35 U.S.C. 151. Further, a record may be disclosed, subject to the limitations of 37 CFR 1.14, as a routine use, to the public if the record was filed in an application which became abandoned or in which the proceedings were terminated and which application is referenced by either a published application, an application open to public inspections or an issued patent.

9. A record from this system of records may be disclosed, as a routine use, to a Federal, State, or local law enforcement agency, if the USPTO becomes aware of a violation or potential violation of law or regulation.

UNITED STATES PATENT AND TRADEMARK OFFICE

Commissioner for Patents
United States Patent and Trademark Office
P.O. Box 1450
Alexandria, VA 22313-1450
www.uspto.gov

In re Application of
Clark Barton Keck

Application No. 12051767

Filed:

Attorney Docket No. 1651.003

:DECISION ON PETITION TO MAKE SPECIAL
:UNDER 37 CFR 1.102(c)(1)

This is a decision on the electronic petition under 37 CFR 1.102 (c)(1) ,filed 20-MAR-2008 to make the above-identified application special based on applicant's age as set forth in MPEP § 708.02, Section IV.

The petition is **GRANTED**.

A grantable petition to make an application special under 37 CFR 1.102(c)(1), MPEP § 708.02, Section IV: Applicant's Age must include a statement by applicant or a registered practitioner having evidence that applicant is at least 65 years of age. No fee is required.

Accordingly, the above-identified application has been accorded “special” status and will be taken up for action by the examiner upon the completion of all pre-examination processing.

Telephone inquires concerning this electronic decision should be directed to the Electronic Business Center at 866-217-9197.

All other inquires concerning either the examination or status of the application should be directed to the Technology Center.

UNITED STATES PATENT AND TRADEMARK OFFICE

Commissioner for Patents
United States Patent and Trademark Office
P.O. Box 1450
Alexandria, VA 22313-1450
www.uspto.gov

KING & SPALDING LLP
P.O. BOX 889
BELMONT CA 94002-0889

COPY MAILED
JAN 19 2010

In re Application of	:	
Gabriel ALVARADO	:	
Application No. 12/051,784	:	DECISION ON PETITION
Filed: March 19, 2008	:	
Attorney Docket No. **64186-8001.US00**	:	

This is a decision on the petition under the unintentional provisions of 37 CFR 1.137(b), filed November 25, 2009, to revive the above-identified application.

The petition is **GRANTED**.

This application became abandoned for failure to timely pay the issue and publication fees on or before November 20, 2009, as required by the Notice of Allowance and Fee(s) Due, mailed August 20, 2009. Accordingly, the date of abandonment of this application is November 21, 2009.

The petition satisfies the requirements of 37 CFR 1.137(b) in that petitioner has supplied (1) the reply in the form of payment of the issue fee of $755 and the publication fee of $300, (2) the petition fee of $810; and (3) a proper statement of unintentional delay. Accordingly, the failure to timely pay the issue fee as required by the Notice of Allowance is accepted as being unintentionally delayed.

Telephone inquiries concerning this decision should be directed to Tredelle Jackson at (571) 272-2783.

This application is being referred to the Office of Data Management for processing into a patent.

Ramesh Krishnamurthy

Ramesh Krishnamurthy
Petitions Examiner
Office of Petitions

UNITED STATES PATENT AND TRADEMARK OFFICE

Commissioner for Patents
United States Patent and Trademark Office
P.O. Box 1450
Alexandria, VA 22313-1450
www.uspto.gov

The Law Firm of Andrea Hence Evans, LLC
14625 Baltimore Ave., #853
Laurel MD 20707

MAY 23 2008

In re Application of:	:	
Bert Jan Offrein et al.	:	DECISION ON PETITION TO
Serial No.: 12/051,886	:	MAKE SPECIAL FOR NEW
Filed: March 20, 2008	:	APPLICATION UNDER 37
Docket Number: CH920070109US1	:	C.F.R. § 1.102 & M.P.E.P. § 708.2
Title: OPTOELECTRONIC MCM PACKAGE	:	

This is a decision on the petition filed on March 20, 2008 to make the above-identified application special for accelerated examination procedure under 37 C.F.R. § 1.102(d).

The petition to make the application special is **DISMISSED**.

REGULATION AND PRACTICE

A grantable petition to make special under 37 C.F.R. § 1.102(d) and pursuant to the "Change to Practice for Petitions in Patent Applications to Make Special and for Accelerated Examination" published in the Federal Register on June 26, 2006 (71 Fed. Reg. 36323), must satisfy the following conditions:

I. Conditions Regarding the Application:

1. the application must be a non-reissue utility or design application filed under 37 CFR 1.111(a);
2. the application, the petition and the required fees must be filed electronically using the USPTO's electronic filing system (EFS), or EFS-web; if not filed electronically, a statement asserting that EFS and EFS-web were not available during the normal business hours.
3. at the time of filing, the application must be complete under 37 CFR 1.51 and in condition for examination;
4. the application must contain three or fewer independent claims and twenty or fewer total claims and the claims must be directed to a single invention.

II. Conditions Regarding the Petition:

The petition must:
1. be filed with the application;
2. include a statement that applicant agrees not to separately argue the patentability of any independent claim during any appeal in the application;
3. include a statement that applicant agrees to make an election without traverse in a telephone interview;

4. include a statement that applicant agrees to conduct such an interview when requested by the examiner; and

5. include a statement, made based on a good faith belief, that a preexamination search in compliance with the following requirements, was conducted, including an identification of the field of search by United States class and subclass, where applicable, and for database searches, the search logic or chemical structure or sequence used as a query, the name of the file(s) searched and the database service, and the date of the search.

The preexamination search must:

5.1 involve U.S. patents and patent application publications, foreign patent documents, and non-patent literature, unless the applicant can justify with reasonable certainty that no references more pertinent than those already identified are likely to be found in the eliminated sources and includes such a justification with this statement;

5.2. be directed to the claimed invention and encompass all of the features of the claims, giving the claims the broadest reasonable expectation; and

5.3. encompass the disclosed features that may be claimed.

6. must provide in support of the petition an accelerated examination support document. An accelerated examination support document must include:

6.1. an information disclosure statement (IDS) in compliance with 37 CFR 1.98 citing each reference deemed most closely related to the subject matter of each of the claims;

6.2. an identification of all the limitations in the claims that are disclosed by the reference specifying where the limitation is disclosed in the cited reference;

6.3. a detailed explanation of how each of the claims is patentable over the references cited with particularity required by 37 CFR 1.111(b) and (c);

6.4. a concise statement of the utility of the invention as defined in each of the independent claims (unless the application is a design application);

6.5. a showing of where each limitation of the claims finds support under 35 USC 112, first paragraph, in the written description of the specification. If applicable, the showing must also identify: (1) each means- (or step) plus-function claim element that invokes consideration under 35 USC 112, sixth paragraph; and (2) the structure, material, or acts in the specification that corresponds to each means- (or step) plus-function claim element that invokes consideration under 35 USC 112, sixth paragraph; if the application claims the benefit of one or more applications under title 35, United States Code, the showing must also include where each limitation of the claims finds support under 35 USC 112, first paragraph, in each such application in which such supports exists; and

6.6. an identification of any cited references that may be disqualified under 35 USC 103(c).

REVIEW OF FACTS

The conditions set forth in I. 1-4 and II. 1-5 are considered to have been met. However, the petition fails to comply with the all the conditions set forth in II. 6 above, specifically conditions II 6.2 and 6.5. Therefore, the petition fails to meet the required conditions to be accorded special status under the accelerated examination procedure.

Regarding the conditions of II. 6.2, an identification of all the limitations in the claims that are disclosed by the reference specifying where the limitation is disclosed in the cited reference is required. The listing of some non-claimed limitations in the reference is not sufficient. The limitations referred to in II. 6.2 are claim limitations. It should be specified what claim limitations of the application are met by the reference and where the claimed limitations are disclosed in the reference, as well as which claim limitations are not met by the reference.

Regarding the conditions of II. 6.5, a showing of where each claim limitation finds support under 35 USC 112, first paragraph, in the written description of the specification is required. The statement that support for the entire claim "is at least in pages 2-5 as well as in Figures 1-4 of the application" is not specific enough. It must be indicated exactly where in the written description of the specification the support for ***each*** individual claim limitation can be found in the specification. This showing basically requires a copying of the claim, listing reference numbers for each claimed element and an indication where in the written description of the specification the claimed element is discussed.

DECISION

For the above-stated reasons, the petition is **dismissed**. The application will therefore be taken up by the examiner for action in its regular turn.

Petitioner is given a single opportunity to perfect the petition. Any request for reconsideration of this decision must be submitted within 1 (one) month or 30 (thirty) days, whichever is longer, from the date of this decision in order to be considered timely. Any request for reconsideration must address the deficiencies indicated above.

Petition is reminded that, upon granting of the special status of the application on request for reconsideration, the application will be processed expeditiously. However, due to the dismissal of the instant petition, examination may not be completed within twelve months of the filing date of the application.

Any inquiry regarding this decision should be directed to the undersigned at (571) 272-1638.

Edward Westin

Edward Westin, Quality Assurance Specialist
Technology Center 2800
Semiconductors, Electrical and Optical
Systems and Components

UNITED STATES PATENT AND TRADEMARK OFFICE

Commissioner for Patents
United States Patent and Trademark Office
P.O. Box 1450
Alexandria, VA 22313-1450
www.uspto.gov

The Law Firm of Andrea Hence Evans, LLC
14625 Baltimore Ave., #853
Laurel, MD 20707

JUN 11 2008

In re Application of:	:	
Bert Jan Offrein et al.	:	DECISION ON RENEWED
Serial No.: 12/051,886	:	PETITION TO MAKE SPECIAL
Filed: March 20, 2008	:	UNDER 37 C.F.R. § 1.102
Docket Number: CH920070109US1	:	& M.P.E.P. § 708.2
Title: OPTOELECTRONIC MCM PACKAGE	:	

This is a decision on the renewed petition filed on June 6, 2008 to make the above-identified application special for accelerated examination procedure under 37 C.F.R. §1.102(d).

The renewed petition to make the application special is GRANTED.

The application is eligible for accelerated examination and the petition complies with the conditions for granting the application special status pursuant to the "Change to Practice for Petitions in Patent Applications to Make Special and for Accelerated Examination" published June 26, 2006, in the Federal Register. (71 Fed. Reg. 36323).

The prosecution of the instant application will be conducted expeditiously according to the following guidelines.

1. The application will be docketed to an examiner and taken up for action within two weeks of the date of this decision.

2. Restriction Practice:
   If the examiner determines that the claims are not directed to a single invention, a telephone request to elect one single invention will be made pursuant to MPEP 812.01. As a prerequisite to the grant of this petition, the applicant has agreed to make an oral election, by telephone, without traverse. If the applicant refuses to make an election without traverse, or the examiner cannot reach the applicant after a reasonable effort, the examiner will treat the first claimed invention (invention defined by claim 1) as having being constructively elected without traverse for examination.

3. Office action:
   If it is determined that, after appropriate consultation, there is a potential rejection or any other issue to be addressed, the examiner will telephone the applicant and arrange an interview to discuss and resolve the issue. An Office action, other than a Notice of Allowance and Fee(s) Due (Notice of Allowance), will not be issued unless either: 1) an

interview was conducted but did not result in agreed to action that places the application in condition for allowance, or, 2) a determination is made that an interview would be unlikely to result in the application being placed in condition for allowance, and 3) an internal conference has been held to review any rejection of any claim.

4. Time for Reply:
An Office action other than a Notice of Allowance or a final Office action will set a shortened statutory period of one month or thirty days, whichever is longer, for reply with no extension of time available under 37 C.F.R. §1.136(a). Failure to timely file a reply within this non-extendible period for reply will result in the abandonment of the application.

5. Reply by Applicant:
A timely reply to an Office action other than the Notice of Allowance must be submitted electronically via EFS or EFS-web and limited to addressing the rejections, objections and requirement made. Any amendment that attempts to: 1) add claims which would result in more than three pending independent claims or more than twenty pending total claims; 2) present claims not encompassed by the pre-examination search or an updated accelerated examination support document; or 3) present claims that are directed a non-elected invention or an invention other than that previously claimed and examined in the application, will be treated as not fully responsive and will not be entered.

For any amendment to the claims (including any new claim) that is not encompassed by the accelerated examination support document, applicant must provide an updated accelerated examination support document that encompasses the amended or new claims at the time of filing of the amendment.

To proceed expeditiously with the examination, it is recommended that a reply with amendments made to any claim or with any new claim being added be accompanied by an updated accelerated examination support document or a statement explaining how the amended or new claim is supported by the original accelerated examination support document.

6. Information Disclosure Statement (IDS):
Any IDS filed during prosecution must be submitted electronically via EFS or EFS-web, accompanied by an updated accelerated examination support document, and be in compliance with 37 C.F.R. §1.97 and §1.98.

7. Post-Allowance Processing:
To expedite processing of the allowed application into a patent, the applicant must: 1) pay the required fees within one month of the date of the Notice of Allowance, and 2) not file any post allowance papers not required by the Office. In no event may the issue fee be paid and accepted later than three months from the date of the Notice of Allowance.

8. After-Final and Appeal Procedures:
   To expedite prosecution, after receiving the final Office action, applicant must: 1) promptly file a notice of appeal, an appeal brief and appeal fees; and 2) not request a pre-appeal brief conference.

   Any amendment, affidavit or other evidence filed after final Office action must comply with applicable rules and the requirements outlined in numbered paragraphs 5 and 6 above.

   On appeal, the application will proceed according to normal appeal procedures. After appeal, the application will again be treated special.

9. Proceedings Outside the Normal Examination Process:
   If the application becomes involved in a proceeding that is outside the normal examination process (e.g., a secrecy order, national security review, interference proceeding, petitions under 37 C.F.R. §1.181, §1.182 or §1.183), the application will be treated special before and after such proceeding.

10. Final Disposition:
    The twelve-month goal of this accelerated examination procedure ends with a final disposition. The mailing of a final Office action, a Notice of Allowance, the filing of a Notice of Appeal, or the filing of a Request for Continued Examination (RCE) is the final disposition.

If, during prosecution, a paper is not filed electronically using EFS-web, a reply is filed but is not fully responsive, the application is involved in an appeal, or a proceeding outside normal examination process, the application will still be examined expeditiously, however, the final disposition may occur more than twelve months from the filing of the application.

Any inquiry regarding this decision should be directed to the undersigned at (571) 272-1638.

Edward Westin

Edward Westin, Quality Assurance Specialist
Technology Center 2800
Semiconductors, Electrical and Optical
Systems and Components

PTO/SB/130 (03-08)
Approved for use through 03/31/2008. OMB 0651- 0031
U.S. Patent and Trademark Office; U.S. DEPARTMENT OF COMMERCE
Under the Paperwork Reduction Act of 1995, no persons are required to respond to a collection of information unless it contains a valid OMB control number

PETITION TO MAKE SPECIAL BASED ON AGE FOR ADVANCEMENT OF EXAMINATION UNDER 37 CFR 1.102(c)(1)

Application Information

Application Number	12051897	Confirmation Number	1362	Filing Date	2008-03-20
Attorney Docket Number (optional)	30017-002001	Art Unit		Examiner	
First Named Inventor	Eyal Shavit et. al				
Title of Invention	Participation Systems and Methods				

Attention: Office of Petitions

An application may be made special for advancement of examination upon filing of a petition showing that the applicant is 65 years of age, or more. No fee is required with such a petition. See 37 CFR 1.102(c)(1) and MPEP 708.02 (IV).

APPLICANT HEREBY PETITIONS TO MAKE SPECIAL FOR ADVANCEMENT OF EXAMINATION IN THIS APPLICATION UNDER 37 CFR 1.102(c)(1) and MPEP 708.02 (IV) ON THE BASIS OF THE APPLICANT'S AGE.

A grantable petition requires one of the following items:
(1) Statement by one named inventor in the application that he/she is 65 years of age, or more; or
(2) Certification by a registered attorney/agent having evidence such as a birth certificate, passport, driver's license, etc. showing one named inventor in the application is 65 years of age, or more.

Name of Inventor who is 65 years of age, or older

Given Name	Middle Name	Family Name	Suffix
Lloyd	E	Shefsky	

A signature of the applicant or representative is required in accordance with 37 CFR 1.33 and 10.18.
Please see 37 CFR 1.4(d) for the format of the signature.

Select (1) or (2) :

○ (1) I am an inventor in this application and I am 65 years of age, or more.

◉ (2) I am an attorney or agent registered to practice before the Patent and Trademark Office, and I certify that I am in possession of evidence, and will retain such in the application file record, showing that the inventor listed above is 65 years of age, or more.

Signature		Date (YYYY-MM-DD)	2008-03-21
Name	Mandy Jubang	Registration Number	45884

UNITED STATES PATENT AND TRADEMARK OFFICE

Commissioner for Patents
United States Patent and Trademark Office
P.O. Box 1450
Alexandria, VA 22313-1450
www.uspto.gov

OCCHIUTI ROHLICEK & TSAO, LLP
10 FAWCETT STREET
CAMBRIDGE, MA 02138

COPY MAILED

APR 1 0 2008

OFFICE OF PETITIONS

In re Application of	:	
SHAVIT, Eyal et al.	:	
Application No. 12/051,897	:	DECISION ON PETITION
Filed: March 20, 2008	:	TO MAKE SPECIAL UNDER
Attorney Docket No. **30017-002001**	:	37 CFR 1.102(c)(1)
	:	

This is a decision on the petition under 37 CFR 1.102(c)(1), filed March 21, 2008, to make the above-identified application special based on applicant's age as set forth in M.P.E.P. § 708.02, Section IV.

The petition is **DISMISSED**.

A grantable petition to make an application special under 37 CFR 1.102(c)(1) and MPEP § 708.02, Section IV: Applicant's Age, must be accompanied by evidence showing that at least one of the applicants is 65 years of age, or more, such as a birth certificate or a statement by applicant. No fee is required.

The instant petition does not include sufficient evidence that the applicant is 65 years of age or more. Statements made by an attorney/agent or an applicant that is not 65 years of age is insufficient.

Further correspondence with respect to this matter should be addressed as follows:

By Mail: Mail Stop PETITION
Commissioner for Patents
P. O. Box 1450
Alexandria, VA 22313-1450

By hand: U. S. Patent and Trademark Office
Customer Service Window, Mail Stop Petitions
Randolph Building
401 Dulany Street
Alexandria, VA 22314

By FAX: (571) 273-8300

Telephone inquiries concerning this decision should be directed to the undersigned at 571-272-4231.

All other inquiries concerning either the examination or status of the application should be directed to the Technology Center.

This application is being referred to the Office of Initial Patent Examination to await a reply to the Notice to File Missing Parts (Notice) mailed April 02, 2008. This application will be accorded "special" status when pre-examination processing is done.

Michelle R. Eason

Michelle R. Eason
Paralegal Specialist
Office of Petitions

UNITED STATES PATENT AND TRADEMARK OFFICE

Commissioner for Patents
United States Patent and Trademark Office
P.O. Box 1450
Alexandria, VA 22313-1450
www.uspto.gov

OCCHIUTI ROHLICEK & TSAO, LLP
10 FAWCETT STREET
CAMBRIDGE, MA 02138

COPY MAILED

MAY 2 2 2008

OFFICE OF PETITIONS

In re Application of	:	
SHAVIT, Eyal et al.	:	**CORRECTED**
Application No. 12/051,897	:	DECISION ON PETITION
Filed: March 20, 2008	:	TO MAKE SPECIAL UNDER
Attorney Docket No. **30017-002001**	:	37 CFR 1.102(c)(1)
	:	

This is a decision on the petition under 37 CFR 1.102(c)(1), filed March 21, 2008, to make the above-identified application special based on applicant's age as set forth in M.P.E.P. § 708.02, Section IV.

The petition is **GRANTED**.

A grantable petition to make an application special under 37 CFR 1.102(c)(1) and MPEP § 708.02, Section IV: Applicant's Age must be accompanied by evidence showing that at least one of the applicants is 65 years of age, or more, such as a birth certificate or a statement by applicant. No fee is required

The instant petition includes a statement attesting that Lloyd E. Shefsky is over 65 years of age. Accordingly, the above-identified application has been accorded "special" status.

Telephone inquiries concerning this decision should be directed to Michelle R. Eason at 571-272-4231.

All other inquiries concerning either the examination or status of the application should be directed to the Technology Center.

This application is being referred to the Office of Initial Patent Examination to await a reply to the Notice to File Missing Parts (Notice) mailed April 10, 2008. This application will be accorded "special" status when pre-examination processing is done.

Michelle R. Eason
Paralegal Specialist
Office of Petitions

UNITED STATES PATENT AND TRADEMARK OFFICE

UNITED STATES DEPARTMENT OF COMMERCE
United States Patent and Trademark Office
Address: COMMISSIONER FOR PATENTS
P.O. Box 1450
Alexandria, Virginia 22313-1450
www.uspto.gov

APPLICATION NO.	FILING DATE	FIRST NAMED INVENTOR	ATTORNEY DOCKET NO.	CONFIRMATION NO.
12/051,937	03/20/2008	Josef Messinger	029300.59939US	1473

7590 02/23/2010
CROWELL & MORING LLP
INTELLECTUAL PROPERTY GROUP
P.O. BOX 14300
WASHINGTON, DC 20044-4300

EXAMINER
BADIO, BARBARA P

ART UNIT	PAPER NUMBER
1628	

MAIL DATE	DELIVERY MODE
02/23/2010	PAPER

DECISION GRANTING PETITION UNDER 37 CFR 1.138(d)

The declaration of express abandonment is recognized

This is in response to the petition under 37 CFR 1.138(d), requesting for a refund of any previously paid search fee and excess claims fee in the above-identified application.

The petition is granted.

The express abandonment is recognized. Any previously paid search fee and excess claims fee are hereby refunded.

Telephone inquiries should be directed to the Office of Data Management at (571) 272-4200.

Mimi Farmer

Patent Publication Branch
Office of Data Management

Refund Refe
02/24/2010 0000000314

Credit Card Refund Total: $660.00

Express Abandonment

Adjustment date: 02/24/2010 MFARMER
03/20/2008 INTERSW 00000314 12051937
02 FC:1111 -510.00 OP
04 FC:1202 -150.00 OP

FORM PET651G (Rev. 08/07)

SPE RESPONSE FOR CERTIFICATE OF CORRECTION

Paper No.:20090305

DATE : March 09, 2009

TO SPE OF : ART UNIT 2862

SUBJECT : Request for Certificate of Correction on Patent No.: 7474091

A response is requested with respect to the accompanying request for a certificate of correction.

Please complete this form and return with file, within **7** days to:
Certificates of Correction Branch - ST (South Tower) 9A22
Palm location **7590** - Tel. No. (703) 305-8309

With respect to the change(s) requested, correcting Office and/or Applicant's errors, should the patent read as shown in the certificate of correction? No new matter should be introduced, nor should the scope or meaning of the claims be changed.

Thank You For Your Assistance **Certificates of Correction Branch**

The request for issuing the above-identified correction(s) is hereby:

Note your decision on the appropriated box.

☒ **Approved** All changes apply.

☐ **Approved in Part** Specify below which changes **do not** apply.

☐ **Denied** State the reasons for denial below.

Comments:

/PATRICK J ASSOUAD/
Supervisory Patent Examiner.Art Unit 2862

UNITED STATES PATENT AND TRADEMARK OFFICE

Commissioner for Patents
United States Patent and Trademark Office
P.O. Box 1450
Alexandria, VA 22313-1450
www.uspto.gov

MCDERMOTT WILL & EMERY, LLP
600 13TH STREET, N.W.
WASHINGTON, DC 20005-3096

MAILED

MAY 10 2010

OFFICE OF PETITIONS

In re Application of	:	
Sang Cheol Lee, et. al.	:	
Application No. 12/051,970	:	DECISION ON PETITION
Filed: March 20, 2008	:	TO WITHDRAW FROM
Attorney Docket No. 086121-0020	:	RECORD

This is a decision on the Request to Withdraw as attorney or agent of record under 37 CFR §§ 1.36(b) or 10.40, filed March 4, 2010.

The request is **NOT APPROVED**.

It is noted that petitioner did not make all the required certifications[1]. However, since the assignee revoked the previous power of attorney on March 26, 2010, the request to withdraw under 37 CFR §§ 1.36(b) or 10.40 is moot.

All future communications from the Office will be directed to the above-listed address until otherwise notified by applicant.

This application file is being referred to Technology Center Art Unit 3657 for examination in due course.

Telephone inquires concerning this decision should be directed to the undersigned at (571) 272-3226.

Andrea Smith
Petitions Examiner
Office of Petitions

cc: LADAS & PARRY
5670 WILSHIRE BOULEVARD, SUITE 2100
LOS ANGELES, CA 90036-5679

[1] Petitioner has not made the statement that "I/We given reasonable notice to the client, prior to the expiration of the response period, that the practioner(s) intend to withdraw from employment." Thus, if necessary, petitioner should inform the client of any response periods that may be due. *See* 37 CFR 10.40(a) and USPTO Form No. PTO/SB/83.

UNITED STATES PATENT AND TRADEMARK OFFICE

Commissioner for Patents
United States Patent and Trademark Office
P.O. Box 1450
Alexandria, VA 22313-1450
www.uspto.gov

MCDERMOTT WILL & EMERY, LLP
600 13TH STREET, N.W.
WASHINGTON, DC 20005-3096

MAILED

MAY 10 2010

OFFICE OF PETITIONS

In re Application of	:	
Chung Jae Lee, et. al.	:	
Application No. 12/051,978	:	DECISION ON PETITION
Filed: March 20, 2008	:	TO WITHDRAW FROM
Attorney Docket No. 086121-0021	:	RECORD

This is a decision on the Request to Withdraw as attorney or agent of record under 37 CFR §§ 1.36(b) or 10.40, filed March 4, 2010.

The request is **NOT APPROVED**.

It is noted that petitioner did not make all the required certifications[1]. However, since the assignee revoked the previous power of attorney on March 26, 2010, the request to withdraw under 37 CFR §§ 1.36(b) or 10.40 is moot.

All future communications from the Office will be directed to the above-listed address until otherwise notified by applicant.

This application file is being referred to Technology Center Art Unit 3657 for examination in due course.

Telephone inquires concerning this decision should be directed to the undersigned at (571) 272-3226.

Andrea Smith
Petitions Examiner
Office of Petitions

cc: LADAS & PARRY
5670 WILSHIRE BOULEVARD, SUITE 2100
LOS ANGELES, CA 90036-5679

[1] Petitioner has not made the statement that "I/We given reasonable notice to the client, prior to the expiration of the response period, that the practioner(s) intend to withdraw from employment." Thus, if necessary, petitioner should inform the client of any response periods that may be due. *See* 37 CFR 10.40(a) and USPTO Form No. PTO/SB/83.

UNITED STATES PATENT AND TRADEMARK OFFICE

Commissioner for Patents
United States Patent and Trademark Office
P.O. Box 1450
Alexandria, VA 22313-1450
www.uspto.gov

VERIZON PATENT MANAGEMENT GROUP
1320 North Court House Road
9th Floor
ARLINGTON VA 22201-2909

COPY MAILED

SEP 23 2009

OFFICE OF PETITIONS

In re Application of	:	ON PETITION
Albert L. SCHMIDT JR. et al.	:	
Application No. 12/051,979	:	
Filed: March 20, 2008	:	
Attorney Docket No. 99-818C2	:	

This is a decision on the petition under 37 CFR 1.137(b), filed June 29, 2009, to revive the above-identified application.

The petition is **GRANTED**.

The above-identified application became abandoned for failure to file a proper reply in a timely manner to the Notice to File Corrected Application Papers of Nonprovisional Application mailed April 07, 2008, which set a period for reply of two (2) months. No extensions of time under the provisions of 37 CFR 1.136(a) were obtained. Accordingly, the above-identified application became abandoned on June 08, 2008.

The petition satisfies the conditions for revival pursuant to the provisions of 37 CFR 1.137(b) in that (1) the reply in the form of the required drawings; (2) the petition fee of $1,620.00; and (3) the required statement of unintentional delay have been received. Accordingly, the reply to the Notice to File Corrected Application Papers of April 07, 2008 is accepted as having been unintentionally delayed.

It is not apparent whether the person signing the statement of unintentional delay was in a position to have firsthand or direct knowledge of the facts and circumstances of the delay at issue. Nevertheless, such statement is being treated as having been made as the result of a reasonable inquiry into the facts and circumstances of such delay. See 37 CFR 10.18(b) and Changes to Patent Practice and Procedure; Final Rule Notice, 62 Fed. Reg. 53131, 53178 (October 10, 1997), 1203 Off. Gaz. Pat. Office 63, 103 (October 21, 1997). In the event that such an inquiry has not been made, petitioner must make such an inquiry. If such inquiry results in the discovery that it is not correct that the entire delay in filing the required reply from the due date for the reply until the filing of a grantable petition pursuant to 37 CFR 1.137(b) was unintentional, petitioner must notify the Office.

There is no indication that the person signing the petition was ever given a power of attorney to prosecute the application. If the person signing the petition desires to receive future correspondence regarding this application, the appropriate power of attorney document must be submitted. While a courtesy copy of this decision is being mailed to the person signing the petition, all future correspondence will be directed to the address currently of record until appropriate instructions are received.

Telephone inquiries concerning this decision should be directed to Niketa I. Patel at 571-272-4156 or in her absence, the undersigned at 571-272-7099.

The application is being referred to the Office of Patent Application Processing.

David Bucci
Petitions Examiner
Office of Petitions

Cc:
JUSTIN S. COHEN
RADER, FISHMAN & GRAUER PLLC
39533 WOODWARD AVENUE
SUITE 140
BLOOMFIELD HILLS MICHIGAN 48304

UNITED STATES PATENT AND TRADEMARK OFFICE

UNITED STATES DEPARTMENT OF COMMERCE
United States Patent and Trademark Office
Address: COMMISSIONER FOR PATENTS
P.O. Box 1450
Alexandria, Virginia 22313-1450
www.uspto.gov

APPLICATION NO.	FILING DATE	FIRST NAMED INVENTOR	ATTORNEY DOCKET NO.	CONFIRMATION NO.
12/052,012	03/20/2008	Yasuhiko TANABE	324120US2SRD	1633

7590 09/15/2009
OBLON, SPIVAK, MCCLELLAND MAIER & NEUSTADT, L.L.P.
1940 DUKE STREET
ALEXANDRIA, VA 22314

EXAMINER
GHAYOUR, MOHAMMAD H

ART UNIT	PAPER NUMBER
2611	

NOTIFICATION DATE	DELIVERY MODE
09/15/2009	ELECTRONIC

DECISION GRANTING PETITION UNDER 37 CFR 1.138(d)

The declaration of express abandonment is recognized

This is in response to the petition under 37 CFR 1.138(d), requesting for a refund of any previously paid search fee and excess claims fee in the above-identified application.

The petition is granted.

The express abandonment is recognized. Any previously paid search fee and excess claims fee are hereby refunded.

Telephone inquiries should be directed to the Office of Data Management at (571) 272-4200.

Patent Publication Branch
Office of Data Management

Refund Ref:
09/14/2009 0030074354

Credit Card Refund Total: $870.00

Ac Exp..: XXXXXXXXXXX1001

Adjustment date: 09/14/2009 NFARHER
03/20/2008 INTEFSW 00007482 12052012
02 FC:1111 -510.00 OP
04 FC:1202 -150.00 OP
05 FC:1201 -210.00 OP

FORM PET651G (Rev. 08/07)

UNITED STATES PATENT AND TRADEMARK OFFICE

UNITED STATES DEPARTMENT OF COMMERCE
United States Patent and Trademark Office
Address: COMMISSIONER FOR PATENTS
P.O. Box 1450
Alexandria, Virginia 22313-1450
www.uspto.gov

MURATA MANUFACTURING COMPANY, LTD.
C/O KEATING & BENNETT, LLP
1800 Alexander Bell Drive
SUITE 200
Reston, VA 20191

Mail Date: 04/20/2010

Applicant	: Kunihiro KOYAMA	: DECISION ON REQUEST FOR
Patent Number	: 7650692	: RECALCULATION of PATENT
Issue Date	: 01/26/2010	: TERM ADJUSTMENT IN VIEW
Appliction No	: 12/052,087	: OF WYETH AND NOTICE OF INTENT TO
Filed	: 03/20/2008	: ISSUE CERTIFICATE OF CORRECTION
		:

The Request for Recalculation is **GRANTED** to the extent indicated.

The patent term adjustment has been determined to be **0** days. The USPTO will *sua sponte* issue a certificate of correction reflecting the amount of PTA days determined by the recalculation.

Prior to the issuance of the certificate of correction, the USPTO will afford patentee an opportunity to be heard and request reconsideration. Accordingly, patentee has **one month or thirty (30) days**, whichever is longer, to file a request for reconsideration of this patent term adjustment calculation. See 35 U.S.C. 154(b)(3)(B)(ii) and 37 CFR 1.322(a)(4). No extensions of time will be granted under 37 CFR 1.136.

Patentee should use document code PET.OP if electronically filing a request for reconsideration of this patent term adjustment calculation. The patentee must also include the information required by 37 CFR 1.705(b)(2) and the fee required by 37 CFR 1.18(e). If patentee does not file a timely request for reconsideration of this patent term adjustment calculation including the information required by 37 CFR 1.705(b)(2) and the fee required by 37 CFR 1.18(e), the USPTO will issue a certificate of correction reflecting the PTA determination noted above.

Patentee should be aware that in order to preserve the right to review in the United States District Court for the District of Columbia of the USPTO patent term adjustment determination, patentee must ensure that he or she also take the steps required under 35 U.S.C. 154(b)(4)(A) in a timely manner. Nothing in the request for recalculation should be construed as providing an alternative time frame for commencing a civil action under 35 U.S.C. 154(b)(4)(A).

Any questions concerning this decision should be directed to the Office of Patent Legal Administration at 571-272-7702.

UNITED STATES PATENT AND TRADEMARK OFFICE

UNITED STATES DEPARTMENT OF COMMERCE
United States Patent and Trademark Office
Address: COMMISSIONER FOR PATENTS
P.O. Box 1450
Alexandria, Virginia 22313-1450
www.uspto.gov

APPLICATION NO.	FILING DATE	FIRST NAMED INVENTOR	ATTORNEY DOCKET NO.	CONFIRMATION NO.
12/052,160	03/20/2008	Philip G. Emma	YOR920070434US1	1892

48915 7590 06/04/2008
CANTOR COLBURN LLP-IBM YORKTOWN
20 Church Street
22nd Floor
Hartford, CT 06103

EXAMINER
SPARKS, DONALD ALAN

ART UNIT	PAPER NUMBER
2187	

MAIL DATE	DELIVERY MODE
06/04/2008	PAPER

Please find below and/or attached an Office communication concerning this application or proceeding.

The time period for reply, if any, is set in the attached communication.

UNITED STATES PATENT AND TRADEMARK OFFICE

Commissioner for Patents
United States Patent and Trademark Office
P.O. Box 1450
Alexandria, VA 22313-1450
www.uspto.gov

CANTOR COLBURN LLP - IBM YORKTOWN
20 Church Street
22nd Floor
Hartford CT 06103

In re Application of: Emma et al. Serial No.: 12/052160 Filed: March 20, 2008 Docket: YOR920070434US1 Title: SYSTEMS INVOLVING MEMORY CACHES	DECISION ON PETITION TO MAKE SPECIAL FOR NEW APPLICATION UNDER 37 C.F.R. § 1.102 & M.P.E.P. § 708.02

This is a decision on the petition filed on March 20, 2008 to make the above-identified application special for accelerated examination procedure under 37 C.F.R. § 1.102(d).

The petition to make the application special is **DISMISSED**.

REGULATION AND PRACTICE

A grantable petition to make special under 37 C.F.R. § 1.102(d) and pursuant to the "Change to Practice for Petitions in Patent Applications to Make Special and for Accelerated Examination" published in the Federal Register on June 26, 2006 (71 Fed. Reg. 36323), must satisfy the following conditions:

I. Conditions Regarding the Application:

1. the application must be a non-reissue utility or design application filed under 37 CFR 1.111(a);
2. the application, the petition and the required fees must be filed electronically using the USPTO's electronic filing system (EFS), or EFS-web; if not filed electronically, a statement asserting that EFS and EFS-web were not available during the normal business hours.
3. at the time of filing, the application must be complete under 37 CFR 1.51 and in condition for examination;
4. the application must contain three or fewer independent claims and twenty or fewer total claims and the claims must be directed to a single invention.

II. Conditions Regarding the Petition:

The petition must:

1. be filed with the application;

2. include a statement that applicant agrees not to separately argue the patentability of any independent claim during any appeal in the application;

3. include a statement that applicant agrees to make an election without traverse in a telephone interview.

4. include a statement that applicant agrees to conduct such an interview when requested by the examiner.

5. include a statement, made based on a good faith belief, that a preexamination search in compliance with the following requirements, was conducted, including an identification of the filed of search by United States class and subclass, where applicable, and for database searches, the search logic or chemical structure or sequence used as a query, the name of the file(s) searched and the database service, and the date of the search.

The preexamination search must:

5.1 involve U.S. patents and patent application publications, foreign patent documents, and non-patent literature, unless the applicant can justify with reasonable certainty that no references more pertinent than those already identified are likely to be found in the eliminated sources and includes such a justification with this statement;

5.2. be directed to the claimed invention and encompass all of the features of the claims, giving the claims the broadest reasonable expectation;

5.3. encompass the disclosed features that may be claimed.

6. must provide in support of the petition an accelerated examination support document. An accelerated examination support document must include:

6.1. an information disclosure statement (IDS) in compliance with 37 CFR 1.98 citing each reference deemed most closely related to the subject matter of each of the claims;

6.2. an identification of all the limitations in the claims that are disclosed by the reference specifying where the limitation is disclosed in the cited reference;

6.3. a detailed explanation of how each of the claims are patentable over the references cited with particularity required by 37 CFR 1.111(b) and (c);

6.4. a concise statement of the utility of the invention as defined in each of the independent claims (unless the application is a design application);

6.5. a showing of where each limitation of the claims finds support under 35 USC 112, first paragraph, in the written description of the specification. If applicable, the showing must also identify: (1) each means- (or step) plus-function claim element that invokes consideration under 35 UDC 112, sixth paragraph; and (2) the structure, material, or acts in the specification that corresponds to each means- (or step) plus-function claim element that invokes consideration under 35 UDC 112, sixth paragraph; if the application claims the benefit of one or more applications under title 35, United States Code, the showing must also include where each limitation of the claims finds support under 35 USC 112, first paragraph, in each such application in which such supports exists;

6.6. an identification of any cited references that may be disqualified under 35 USC 103(c).

REVIEW OF FACTS

The conditions I.1 – I.4, II.1 – II.4, II.5.3, II.6.1, II.6.2, II 6.3, II.6.4 and II.6.6 above are considered to have been met. However, the petition fails to comply with conditions II.5, specifically II.5.1 and II.5.2, and II.6.5 above. Therefore, the petition fails to meet the required conditions to be accorded special status under the accelerated examination procedure.

With respect to item **II.5.1 and II.5.2** above, petitioner is required to provide keywords and phrases encompassing limitations of each claim including those deemed by the applicant as patentable features distinguishing the claimed invention from the cited prior art used in any database search. The preexam search must be directed to the (instant) claimed invention and encompass all of the disclosed features of the (instant) claims.

The guidelines for Applicants under the New Accelerated Exam Proc states as follows in Part I item 8 section 2.: A text search of the US patents and published patent applications that covers the subject matter of the independent claims using terms recognized in the art given their broadest reasonable interpretation. The search should consider **individual features by themselves and combinations of features**. The search should cover the **broadest scope encompassed by the claims as well as claims of narrow and intermediate breadth**.

Specifically and with respect to items 5.1 - 5.2 above, on the class/subclass search, given the total number of patents in all the class/subclasses listed as searched, **Petitioner should clarify if a limited classified search was conducted, and if so, how it was limited. Otherwise, a mere listing of class/subclass will be taken as a representation that all of the documents were reviewed in their entirety. Applicant has not included subclass 711/128 "Associative caching" in the search. Further, with respect to the text search, Petitioner should identify whether the text search logic identified in the instant petition was utilized in combination with the field of search (i.e. class/subclass listed in the preexam search document) or separate therefrom (i.e. state whether or not the identified subclasses were searched in their entirety).**

Further with respect to item 5.2 above, claim limitation "position of the primary entry is defined by ...(d) way value" has been asserted as a patentable feature. Yet, this term is not seen as having been searched in the pre-exam search document submitted. Furthermore, applicants have not included synonyms or variations of terms used in the search and other terms that appear in the claim language. Without including the further improvements to the search as outlined above, the search is not seen as encompassing the broadest reasonable interpretation of the claims as required, and thus the search is seen as being inadequate. **Petitioner should review all claim limitations, especially those believed to be patentable distinctions from the cited references to ensure that the search covered these concepts, and update the search and/or provide any clarifications.** Any reference which teaches any portion of the limitation must be so identified even if the reference does not teach the entirety of the limitation. Examples of a properly documented search are available at http://www.uspto.gov/web/patents/accelerated/ae_presearch_sample.doc.

In addition, petitioner should **review the Identification of Limitations disclosed by References and the Detailed Explanation of Patentability** sections **in view of updated search, and changes**

and clarifications, and provide clarifications, as necessary, to ensure compliance with the requirement of items 6.2 and 6.3 above.

Finally, with respect to the requirement of MPEP § 708.02(a)(I.)(I)(5) and item **6.5** above, the Accelerated Examination Support Document is **required to show where each limitation of the claims finds support under 35 USC 112, first paragraph, in the written description of the specification**. Applicant has provided same set of paragraph (#22 and #23 and Fig. 3) to teach all the claim limitations of all 3 claims. Applicant points to paragraph 23 and figure 3 to teach "way value". However, the term "way value" does not appear in paragraph 23 or figure 3. **Applicant must identify portions of text in the specification by page and line number, and specific elements of figure instead of referring to the whole figure, for each of the claim limitations, as providing support under 35 U.S.C. 112, First paragraph**. A clarification and identification of support for each limitation of each claim is required.

DECISION

For the above-stated reasons, the petition is **dismissed**. The application will therefore be taken up by the examiner for action in its regular turn.

Petitioner is given a single opportunity to perfect the petition. Any request for reconsideration of this decision must be submitted within 1 (one) month or 30 (thirty) days, whichever is longer, (no extension of time under 37 CFR 1.136(a)) from the date of this decision in order to be considered timely. Any request for reconsideration must address the deficiencies indicated above.

Petitioner is reminded that, upon granting of the special status of the application on request for reconsideration, the application will be processed expeditiously. However, due to the dismissal of the instant petition, examination may not be completed within twelve months of the filing date of the application.

Any inquiry regarding this decision should be directed to Mano Padmanabhan, at (571) 272-4210.

Mano Padmanabhan
WQAS Technology Center 2100

UNITED STATES PATENT AND TRADEMARK OFFICE

UNITED STATES DEPARTMENT OF COMMERCE
United States Patent and Trademark Office
Address: COMMISSIONER FOR PATENTS
P.O. Box 1450
Alexandria, Virginia 22313-1450
www.uspto.gov

APPLICATION NO.	FILING DATE	FIRST NAMED INVENTOR	ATTORNEY DOCKET NO.	CONFIRMATION NO.
12/052,160	03/20/2008	Philip G. Emma	YOR920070434US1	1892

48915 7590 07/22/2008
CANTOR COLBURN LLP-IBM YORKTOWN
20 Church Street
22nd Floor
Hartford, CT 06103

EXAMINER
SPARKS, DONALD ALAN

ART UNIT	PAPER NUMBER
2187	

MAIL DATE	DELIVERY MODE
07/22/2008	PAPER

Please find below and/or attached an Office communication concerning this application or proceeding.

The time period for reply, if any, is set in the attached communication.

UNITED STATES PATENT AND TRADEMARK OFFICE

Commissioner for Patents
United States Patent and Trademark Office
P.O. Box 1450
Alexandria, VA 22313-1450
www.uspto.gov

CANTOR COLBURN LLP - IBM YORKTOWN
20 Church Street
22nd Floor
Hartford CT 06103

In re Application of: Emma et al. Serial No.: 12/052160 Filed: March 20, 2008 Docket: YOR920070434US1 Title: SYSTEMS INVOLVING MEMORY CACHES	DECISION ON PETITION TO MAKE SPECIAL FOR NEW APPLICATION UNDER 37 C.F.R. § 1.102 & M.P.E.P. § 708.02

This is a decision on the renewed petition filed on June 23, 2008 to make the above-identified application special for accelerated examination procedure under 37 C.F.R. § 1.102(d). The original petition, submitted on March 20, 2008, was dismissed in the decision mailed on June 4, 2008.

The petitioner provided an updated search was performed; however, no new Information Disclosure Statement was filed. Hence it is understood that no new references were found as the result of the updated search.

Since the renewed petition adequately addresses all the concerns raised in the dismissal, the petition to make the application special is **GRANTED.**

The application is eligible for accelerated examination and the petition complies with the conditions for granting the application special status pursuant to the "Change to Practice for Petitions in Patent Applications to Make Special and for Accelerated Examination" published June 26, 2006, in the Federal Register. (71 Fed. Reg. 36323).

The prosecution of the instant application will be conducted expeditiously according to the following guidelines.

1. The application will be docketed to an examiner and taken up for action within two weeks of the date of this decision.

2. Restriction Practice:
   If the examiner determines that the claims are not directed to a single invention, a telephone request to elect one single invention will be made pursuant to MPEP 812.01. As a prerequisite to the grant of this petition, the applicant has agreed to make an oral election, by telephone,

without traverse. If the applicant refuses to make an election without traverse, or the examiner cannot reach the applicant after a reasonable effort, the examiner will treat the first claimed invention (invention defined by claim 1) as having being constructively elected without traverse for examination.

3. Office action:
If it is determined that, after appropriate consultation, there is a potential rejection or any other issue to be addressed, the examiner will telephone the applicant and arrange an interview to discuss and resolve the issue. An Office action, other than a Notice of Allowance and Fee(s) Due (Notice of Allowance), will not be issued unless either: 1) an interview was conducted but did not result in agreed to action that places the application in condition for allowance, or, 2) a determination is made that an interview would be unlikely to result in the application being placed in condition for allowance, and 3) an internal conference has been held to review any rejection of any claim.

4. Time for Reply:
An Office action other than a Notice of Allowance or a final Office action will set a shortened statutory period of one month or thirty days, whichever is longer, for reply with no extension of time available under 37 CFR 1.136(a). Failure to timely file a reply within this non-extendible period for reply will result in the abandonment of the application.

5. Reply by Applicant:
A timely reply to an Office action other than the Notice of Allowance must be submitted electronically via EFS or EFS-web and limited to addressing the rejections, objections and requirement made. Any amendment that attempts to: 1) add claims which would result in more than three pending independent claims or more than twenty pending total claims; 2) present claims not encompassed by the pre-examination search or an updated accelerated examination support document; or 3) present claims that are directed a non-elected invention or an invention other than that previously claimed and examined in the application, will be treated as not fully responsive and will not be entered.

   For any amendment to the claims (including any new claim) that is not encompassed by the accelerated examination support document, applicant must provide an updated accelerated examination support document that encompasses the amended or new claims at the time of filing of the amendment.

   To proceed expeditiously with the examination, it is recommended that a reply with amendments made to any claim or with any new claim being added be accompanied by an updated accelerated examination support document or a statement explaining how the amended or new claim is supported by the original accelerated examination support document.

6. Information Disclosure Statement (IDS):
Any IDS filed during prosecution must be submitted electronically via EFS or EFS-web, accompanied by an updated accelerated examination support document, and be in compliance with 37 CFR 1.97 and 1.98.

7. Post-Allowance Processing:
   To expedite processing of the allowed application into a patent, the applicant must: 1) pay the required fees within one month of the date of the Notice of Allowance, and 2) not file any post allowance papers not required by the Office. In no event may the issue fee be paid and accepted later than three months from the date of the Notice of Allowance.

8. After-Final and Appeal Procedures:
   To expedite prosecution, after receiving the final Office action, applicant must: 1) promptly file a notice of appeal, an appeal brief and appeal fees; and 2) not request a pre-appeal brief conference.

   Any amendment, affidavit or other evidence filed after final Office action must comply with applicable rules and the requirements outlined in numbered paragraphs 5 and 6 above.

   On appeal, the application will proceed according to normal appeal procedures. After appeal, the application will again be treated special.

9. Proceedings Outside the Normal Examination Process:
   If the application becomes involved in a proceeding that is outside the normal examination process (e.g., a secrecy order, national security review, interference proceeding, petitions under 37 CFR 1.181, 182 or 183), the application will be treated special before and after such proceeding.

10. Final Disposition:
    The twelve-month goal of this accelerated examination procedure ends with a final disposition. The mailing of a final Office action, a Notice of Allowance, the filing of a Notice of Appeal, or the filing of a Request for Continued Examination (RCE) is the final disposition.

If, during prosecution, a paper is not filed electronically using EFS-web, a reply is filed but is not fully responsive, the application is involved in an appeal, or a proceeding outside normal examination process, the application will still be examined expeditiously, however, the final disposition may occur more than twelve months from the filing of the application. In addition, Applicant is reminded that due to the dismissal of the previous petition submission, examination may not be completed within twelve months of the filing date of the application.

Any inquiry regarding this decision should be directed to the undersigned at (571) 272-4210. If attempts to reach the undersigned by telephone are unsuccessful, Kakali Chaki, Quality Assurance Specialist, can be reached at (571) 272-3719.

/Mano Padmanabhan/

Mano Padmanabhan,
Quality Assurance Specialist
Technology Center 2100
Computer Architecture, Software and Information Security

UNITED STATES PATENT AND TRADEMARK OFFICE

UNITED STATES DEPARTMENT OF COMMERCE
United States Patent and Trademark Office
Address: COMMISSIONER FOR PATENTS
P.O. Box 1450
Alexandria, Virginia 22313-1450
www.uspto.gov

APPLICATION NO.	FILING DATE	FIRST NAMED INVENTOR	ATTORNEY DOCKET NO.	CONFIRMATION NO.
12/052,163	03/20/2008	Philip G. Emma	YOR920070631US1	1900

48915 7590 06/04/2008
CANTOR COLBURN LLP-IBM YORKTOWN
20 Church Street
22nd Floor
Hartford, CT 06103

EXAMINER
SPARKS, DONALD ALAN

ART UNIT	PAPER NUMBER
2187	

MAIL DATE	DELIVERY MODE
06/04/2008	PAPER

Please find below and/or attached an Office communication concerning this application or proceeding.

The time period for reply, if any, is set in the attached communication.

UNITED STATES PATENT AND TRADEMARK OFFICE

Commissioner for Patents
United States Patent and Trademark Office
P.O. Box 1450
Alexandria, VA 22313-1450
www.uspto.gov

CANTOR COLBURN LLP - IBM YORKTOWN
20 Church Street
22nd Floor
Hartford CT 06103

In re Application of: Emma et al. Serial No.: 12/052163 Filed: March 20, 2008 Docket: YOR920070631US1 Title: METHODS INVOLVING MEMORY CACHES	DECISION ON PETITION TO MAKE SPECIAL FOR NEW APPLICATION UNDER 37 C.F.R. § 1.102 & M.P.E.P. § 708.02

This is a decision on the petition filed on March 20, 2008 to make the above-identified application special for accelerated examination procedure under 37 C.F.R. § 1.102(d).

The petition to make the application special is **DISMISSED**.

REGULATION AND PRACTICE

A grantable petition to make special under 37 C.F.R. § 1.102(d) and pursuant to the "Change to Practice for Petitions in Patent Applications to Make Special and for Accelerated Examination" published in the Federal Register on June 26, 2006 (71 Fed. Reg. 36323), must satisfy the following conditions:

I. Conditions Regarding the Application:

1. the application must be a non-reissue utility or design application filed under 37 CFR 1.111(a);

2. the application, the petition and the required fees must be filed electronically using the USPTO's electronic filing system (EFS), or EFS-web; if not filed electronically, a statement asserting that EFS and EFS-web were not available during the normal business hours.

3. at the time of filing, the application must be complete under 37 CFR 1.51 and in condition for examination;

4. the application must contain three or fewer independent claims and twenty or fewer total claims and the claims must be directed to a single invention.

II. Conditions Regarding the Petition:

The petition must:

1. be filed with the application;

2. include a statement that applicant agrees not to separately argue the patentability of any independent claim during any appeal in the application;

3. include a statement that applicant agrees to make an election without traverse in a telephone interview.

4. include a statement that applicant agrees to conduct such an interview when requested by the examiner.

5. include a statement, made based on a good faith belief, that a preexamination search in compliance with the following requirements, was conducted, including an identification of the filed of search by United States class and subclass, where applicable, and for database searches, the search logic or chemical structure or sequence used as a query, the name of the file(s) searched and the database service, and the date of the search.

The preexamination search must:

5.1 involve U.S. patents and patent application publications, foreign patent documents, and non-patent literature, unless the applicant can justify with reasonable certainty that no references more pertinent than those already identified are likely to be found in the eliminated sources and includes such a justification with this statement;

5.2. be directed to the claimed invention and encompass all of the features of the claims, giving the claims the broadest reasonable expectation;

5.3. encompass the disclosed features that may be claimed.

6. must provide in support of the petition an accelerated examination support document. An accelerated examination support document must include:

6.1. an information disclosure statement (IDS) in compliance with 37 CFR 1.98 citing each reference deemed most closely related to the subject matter of each of the claims;

6.2. an identification of all the limitations in the claims that are disclosed by the reference specifying where the limitation is disclosed in the cited reference;

6.3. a detailed explanation of how each of the claims are patentable over the references cited with particularity required by 37 CFR 1.111(b) and (c);

6.4. a concise statement of the utility of the invention as defined in each of the independent claims (unless the application is a design application);

6.5. a showing of where each limitation of the claims finds support under 35 USC 112, first paragraph, in the written description of the specification. If applicable, the showing must also identify: (1) each means- (or step) plus-function claim element that invokes consideration under 35 UDC 112, sixth paragraph; and (2) the structure, material, or acts in the specification that corresponds to each means- (or step) plus-function claim element that invokes consideration under 35 UDC 112, sixth paragraph; if the application claims the benefit of one or more applications under title 35, United States Code, the showing must also include where each limitation of the claims finds support under 35 USC 112, first paragraph, in each such application in which such supports exists;

6.6. an identification of any cited references that may be disqualified under 35 USC 103(c).

REVIEW OF FACTS

The conditions I.1 – I.4, II.1 – II.4, II.5.3, II.6.1, and II.6.6 above are considered to have been met. However, the petition fails to comply with conditions II.5 - II.5.2, II.6.2, II.6.3, II.6.4 and II.6.5 above. Therefore, the petition fails to meet the required conditions to be accorded special status under the accelerated examination procedure.

Regarding the requirement of MPEP § 708.02(a)(I.)(H)[1] and item **II.5** above, the petition does not include a statement made based on a good faith belief, that a preexamination search in compliance with the above requirements, was conducted.

With respect to item **II.5.1 and II.5.2** above, petitioner is required to provide keywords and phrases encompassing limitations of each claim including those deemed by the applicant as patentable features distinguishing the claimed invention from the cited prior art used in any database search. The preexam search must be directed to the (instant) claimed invention and encompass all of the disclosed features of the (instant) claims.

The guidelines for Applicants under the New Accelerated Exam Proc states as follows in Part I item 8 section 2.: A text search of the US patents and published patent applications that covers the subject matter of the independent claims using terms recognized in the art given their broadest reasonable interpretation. The search should consider **individual features by themselves and combinations of features**. The search should cover the **broadest scope encompassed by the claims as well as claims of narrow and intermediate breadth**.

Specifically and with respect to items 5.1 - 5.2 above, on the class/subclass search, given the total number of patents in all the class/subclasses listed as searched, **Petitioner should clarify if a limited classified search was conducted, and if so, how it was limited. Otherwise, a mere listing of class/subclass will be taken as a representation that all of the documents were reviewed in their entirety.** Further, it is also seen that **the foreign patents database search** is **limited by US class/subclass.**

Further with respect to item 5.2 above, Applicant lists all claim limitation of claims 1, 2, and 3 as being not taught by reference. Additionally, the "Identification of the Limitations of the claims Disclosed by the Disclosed references" and the "Explanation of Patentability" sections in the Examination Support Document indicate that the only reference that was cited to be most closely related to the claimed invention discloses none of the features of the claimed invention. Yet, Fig.2 of the specification is labeled as "Prior Art". Furthermore, applicants have not included synonyms or variations of terms used in the search and other terms that appear in the claim language. **Petitioner should review all claim limitations, especially those believed to be patentable distinctions from the cited references to ensure that the search covered these concepts, and update the search and/or provide any clarifications. Any reference which teaches any portion of the limitation must be so identified even if the reference does not teach the entirety of the limitation.** Examples of a properly documented search are available at http://www.uspto.gov/web/patents/accelerated/ae_presearch_sample.doc.

[1] MPEP 8th ed. rev 5 August 2006

In addition, petitioner should **review the Identification of Limitations disclosed by References and the Detailed Explanation of Patentability** sections **in view of updated search, and changes and clarifications, and provide clarifications, as necessary, to ensure compliance with the requirement of items 6.2 and 6.3 above**.

Regarding the requirement of MPEP § 708.02(a)(I.)(I)(3) and item **6.2 above**, applicant only makes a nominal discussion of the Wilkins reference, the only reference cited by applicant . Applicant should provide a claim-by-claim mapping of the pertinent subject matter disclosed in each of the references, specifically identifying each claim limitation and corresponding disclosure within the reference, citing to specific relevant portions of each reference. Examples can be found on USPTO website, using the link http://www.uspto.gov/web/patents/accelerated/ and clicking on "Sample Accelerated Examination Support Document".

It should be noted that while applicant's detailed explanation of how each of the claims are patentable over the cited references (every reference fails to teach **any** limitation of any independent claim) is technically acceptable, not finding even one reference that teaches even one claimed limitation is an indication of the inadequacy of the search. See also discussion above regarding inadequacy of search. It is assumed that after the supplemental search is completed new references will be found that better read on the claimed invention and will be properly analyzed in the Support Document include with any renewed petition.

In addition, petitioner should review the Detailed Explanation of Patentability section in view of changes and clarifications and provide clarifications, as necessary, to ensure compliance with the requirement of MPEP §708.02(a)(I.)(I)(3) and item 6.3 above.

Regarding the requirement of MPEP § 708.02(a)(I.)(I) and item **II 6.3**, the Accelerated Examination Support Document (AESD) does not provide a detailed explanation of how each of the claims are patentable with the particularity required by 37 CFR 1.111(b) and (c), with respect to claim 3. It is assumed that after the supplemental search is completed new references will be found that better read on the claimed invention, and will be properly analyzed in the Support Document included with any renewed petition. Further, applicant makes statement such as "it may be assumed that Wilkins discloses receiving address bits". It is not clear whether applicant believes that Wilkins teaches such limitations are not. Clarifications are required.

With regard to the requirement of MPEP § 708.02(a)(I.)(I)(4) and item 6.4 above, the concise statement of the utility ***must be of the invention as defined in each of the independent claims.***

Finally, with respect to the requirement of MPEP § 708.02(a)(I.)(I)(5) and item **6.5** above, the Accelerated Examination Support Document is **required to show where each limitation of the claims finds support under 35 USC 112, first paragraph, in the written description of the specification**. Applicant has provided same set of paragraph (#24 and #26 and Fig. 3) to teach all the claim limitations of all claims, without identifying any claim limitation and corresponding support in the cited portions of the specification. **Applicant must identify portions of text in the specification by page and line number, and specific elements of figure instead of referring to**

the whole figure, for each of the claim limitations, as providing support under 35 U.S.C. 112, First paragraph. A clarification and identification of support for each limitation of each claim is required.

DECISION

For the above-stated reasons, the petition is **dismissed**. The application will therefore be taken up by the examiner for action in its regular turn.

Petitioner is given a single opportunity to perfect the petition. Any request for reconsideration of this decision must be submitted within 1 (one) month or 30 (thirty) days, whichever is longer, (no extension of time under 37 CFR 1.136(a)) from the date of this decision in order to be considered timely. Any request for reconsideration must address the deficiencies indicated above.

Petitioner is reminded that, upon granting of the special status of the application on request for reconsideration, the application will be processed expeditiously. However, due to the dismissal of the instant petition, examination may not be completed within twelve months of the filing date of the application.

Any inquiry regarding this decision should be directed to Mano Padmanabhan, at (571) 272-4210.

Mano Padmanabhan
WQAS Technology Center 2100

UNITED STATES PATENT AND TRADEMARK OFFICE

UNITED STATES DEPARTMENT OF COMMERCE
United States Patent and Trademark Office
Address: COMMISSIONER FOR PATENTS
P.O. Box 1450
Alexandria, Virginia 22313-1450
www.uspto.gov

APPLICATION NO.	FILING DATE	FIRST NAMED INVENTOR	ATTORNEY DOCKET NO.	CONFIRMATION NO.
12/052,163	03/20/2008	Philip G. Emma	YOR920070631US1	1900

48915 7590 07/22/2008
CANTOR COLBURN LLP-IBM YORKTOWN
20 Church Street
22nd Floor
Hartford, CT 06103

EXAMINER
SPARKS, DONALD ALAN

ART UNIT	PAPER NUMBER
2187	

MAIL DATE	DELIVERY MODE
07/22/2008	PAPER

Please find below and/or attached an Office communication concerning this application or proceeding.

The time period for reply, if any, is set in the attached communication.

UNITED STATES PATENT AND TRADEMARK OFFICE

Commissioner for Patents
United States Patent and Trademark Office
P.O. Box 1450
Alexandria, VA 22313-1450
www.uspto.gov

CANTOR COLBURN LLP - IBM YORKTOWN
20 Church Street
22nd Floor
Hartford CT 06103

In re Application of: Emma et al. Serial No.: 12/052163 Filed: March 20, 2008 Docket: YOR920070631US1 Title: METHODS INVOLVING MEMORY CACHES	DECISION ON PETITION TO MAKE SPECIAL FOR NEW APPLICATION UNDER 37 C.F.R. § 1.102 & M.P.E.P. § 708.02

This is a decision on the renewed petition filed on June 23, 2008 to make the above-identified application special for accelerated examination procedure under 37 C.F.R. § 1.102(d). The original petition, submitted on March 20, 2008, was dismissed in the decision mailed on June 4, 2008.

The petitioner provided an updated search was performed; however, no new Information Disclosure Statement was filed. Hence it is understood that no new references were found as the result of the updated search.

Since the renewed petition adequately addresses all the concerns raised in the dismissal, the petition to make the application special is **GRANTED**.

The application is eligible for accelerated examination and the petition complies with the conditions for granting the application special status pursuant to the "Change to Practice for Petitions in Patent Applications to Make Special and for Accelerated Examination" published June 26, 2006, in the Federal Register. (71 Fed. Reg. 36323).

The prosecution of the instant application will be conducted expeditiously according to the following guidelines.

1. The application will be docketed to an examiner and taken up for action within two weeks of the date of this decision.

2. Restriction Practice:
   If the examiner determines that the claims are not directed to a single invention, a telephone request to elect one single invention will be made pursuant to MPEP 812.01. As a prerequisite to the grant of this petition, the applicant has agreed to make an oral election, by telephone,

without traverse. If the applicant refuses to make an election without traverse, or the examiner cannot reach the applicant after a reasonable effort, the examiner will treat the first claimed invention (invention defined by claim 1) as having being constructively elected without traverse for examination.

3. Office action:
If it is determined that, after appropriate consultation, there is a potential rejection or any other issue to be addressed, the examiner will telephone the applicant and arrange an interview to discuss and resolve the issue. An Office action, other than a Notice of Allowance and Fee(s) Due (Notice of Allowance), will not be issued unless either: 1) an interview was conducted but did not result in agreed to action that places the application in condition for allowance, or, 2) a determination is made that an interview would be unlikely to result in the application being placed in condition for allowance, and 3) an internal conference has been held to review any rejection of any claim.

4. Time for Reply:
An Office action other than a Notice of Allowance or a final Office action will set a shortened statutory period of one month or thirty days, whichever is longer, for reply with no extension of time available under 37 CFR 1.136(a). Failure to timely file a reply within this non-extendible period for reply will result in the abandonment of the application.

5. Reply by Applicant:
A timely reply to an Office action other than the Notice of Allowance must be submitted electronically via EFS or EFS-web and limited to addressing the rejections, objections and requirement made. Any amendment that attempts to: 1) add claims which would result in more than three pending independent claims or more than twenty pending total claims; 2) present claims not encompassed by the pre-examination search or an updated accelerated examination support document; or 3) present claims that are directed a non-elected invention or an invention other than that previously claimed and examined in the application, will be treated as not fully responsive and will not be entered.

   For any amendment to the claims (including any new claim) that is not encompassed by the accelerated examination support document, applicant must provide an updated accelerated examination support document that encompasses the amended or new claims at the time of filing of the amendment.

   To proceed expeditiously with the examination, it is recommended that a reply with amendments made to any claim or with any new claim being added be accompanied by an updated accelerated examination support document or a statement explaining how the amended or new claim is supported by the original accelerated examination support document.

6. Information Disclosure Statement (IDS):
Any IDS filed during prosecution must be submitted electronically via EFS or EFS-web, accompanied by an updated accelerated examination support document, and be in compliance with 37 CFR 1.97 and 1.98.

7. Post-Allowance Processing:
   To expedite processing of the allowed application into a patent, the applicant must: 1) pay the required fees within one month of the date of the Notice of Allowance, and 2) not file any post allowance papers not required by the Office. In no event may the issue fee be paid and accepted later than three months from the date of the Notice of Allowance.

8. After-Final and Appeal Procedures:
   To expedite prosecution, after receiving the final Office action, applicant must: 1) promptly file a notice of appeal, an appeal brief and appeal fees; and 2) not request a pre-appeal brief conference.

   Any amendment, affidavit or other evidence filed after final Office action must comply with applicable rules and the requirements outlined in numbered paragraphs 5 and 6 above.

   On appeal, the application will proceed according to normal appeal procedures. After appeal, the application will again be treated special.

9. Proceedings Outside the Normal Examination Process:
   If the application becomes involved in a proceeding that is outside the normal examination process (e.g., a secrecy order, national security review, interference proceeding, petitions under 37 CFR 1.181, 182 or 183), the application will be treated special before and after such proceeding.

10. Final Disposition:
    The twelve-month goal of this accelerated examination procedure ends with a final disposition. The mailing of a final Office action, a Notice of Allowance, the filing of a Notice of Appeal, or the filing of a Request for Continued Examination (RCE) is the final disposition.

If, during prosecution, a paper is not filed electronically using EFS-web, a reply is filed but is not fully responsive, the application is involved in an appeal, or a proceeding outside normal examination process, the application will still be examined expeditiously, however, the final disposition may occur more than twelve months from the filing of the application. In addition, Applicant is reminded that due to the dismissal of the previous petition submission, examination may not be completed within twelve months of the filing date of the application.

Any inquiry regarding this decision should be directed to the undersigned at (571) 272-4210. If attempts to reach the undersigned by telephone are unsuccessful, Kakali Chaki, Quality Assurance Specialist, can be reached at (571) 272-3719.

Mano Padmanabhan

Mano Padmanabhan,
Quality Assurance Specialist
Technology Center 2100
Computer Architecture, Software and Information Security

UNITED STATES PATENT AND TRADEMARK OFFICE

Commissioner for Patents
United States Patent and Trademark Office
P.O. Box 1450
Alexandria, VA 22313-1450
www.uspto.gov

In re Application of
THOMAS E. ALLEN

Application No. 12052194

Filed: March 20,2008

Attorney Docket No. M4605.023

:DECISION ON PETITION TO MAKE SPECIAL
:UNDER 37 CFR 1.102(c)(1)

This is a decision on the electronic petition under 37 CFR 1.102 (c)(1), filed 20-JAN-2010 to make the above-identified application special based on applicant's age as set forth in MPEP § 708.02, Section IV.

The petition is **GRANTED**.

A grantable petition to make an application special under 37 CFR 1.102(c)(1), MPEP § 708.02, Section IV: Applicant's Age must include a statement by applicant or a registered practitioner having evidence that applicant is at least 65 years of age. No fee is required.

Accordingly, the above-identified application has been accorded "special" status and will be taken up for action by the examiner upon the completion of all pre-examination processing.

Telephone inquiries concerning this electronic decision should be directed to the Electronic Business Center at 866-217-9197.

All other inquiries concerning either the examination or status of the application should be directed to the Technology Center.

UNITED STATES PATENT AND TRADEMARK OFFICE

UNITED STATES DEPARTMENT OF COMMERCE
United States Patent and Trademark Office
Address: COMMISSIONER FOR PATENTS
P.O. Box 1450
Alexandria, Virginia 22313-1450
www.uspto.gov

APPLICATION NO.	FILING DATE	FIRST NAMED INVENTOR	ATTORNEY DOCKET NO.	CONFIRMATION NO.
12/052,275	03/20/2008	Yoshiyuki TERAOKA	322303US8	2105

7590 03/29/2010
OBLON, SPIVAK, MCCLELLAND MAIER & NEUSTADT, L.L.P.
1940 DUKE STREET
ALEXANDRIA, VA 22314

EXAMINER

ART UNIT	PAPER NUMBER
2627	

NOTIFICATION DATE	DELIVERY MODE
03/29/2010	ELECTRONIC

DECISION GRANTING PETITION UNDER 37 CFR 1.138(d)

The declaration of express abandonment is recognized

This is in response to the petition under 37 CFR 1.138(d), requesting for a refund of any previously paid search fee and excess claims fee in the above-identified application.

The petition is granted.

The express abandonment is recognized. Any previously paid search fee and excess claims fee are hereby refunded.

Telephone inquiries should be directed to the Office of Data Management at (571) 272-4200.

Patent Publication Branch
Office of Data Management

FORM PET651G (Rev. 08/07)

UNITED STATES PATENT AND TRADEMARK OFFICE

Commissioner for Patents
United States Patent and Trademark Office
P.O. Box 1450
Alexandria, VA 22313-1450
www.uspto.gov

PHILIP H. BURRUS, IV
460 GRANT STREET
ATLANTA GA 30312

MAILED

MAY 11 2010

OFFICE OF PETITIONS

In re Application of	:	
Franklin Stebin Horne, III	:	DECISION ON PETITION
Application No. 12/052,294	:	TO WITHDRAW
Filed: March 20, 2008	:	FROM RECORD
Attorney Docket No. BPSTB0001SH	:	

This is a decision on the Request to Withdraw as attorney or agent of record under 37 C.F.R. § 1.36(b), filed March 15, 2010.

The request is **APPROVED**.

A grantable request to withdraw as attorney/agent of record must be signed by every attorney/agent seeking to withdraw or contain a clear indication that one attorney is signing on behalf of another/others. The Office will require the practitioner(s) to certify that he, she or they have: (1) given reasonable notice to the client, prior to the expiration of the reply period, which the practitioner(s) intends to withdraw from employment; (2) delivered to the client or a duly authorized representative of the client all papers and property (including funds) to which the client is entitled; and (3) notified the client of any replies that may be due and the time frame within which the client must respond, pursuant to 37 CFR 10.40 (c).

The request was signed by Philip H. Burrus, IV on behalf of all attorneys of record who are associated with Customer No. 27939.

All attorneys/agents associated with Customer Number 27939 have been withdrawn. Applicant is reminded that there is no attorney of record at this time.

All future correspondence will be directed to the applicant at the address indicated below.

Currently, there is no outstanding Office action that requires a reply.

Telephone inquires concerning this decision should be directed to the undersigned at (571) 272-7751. All other inquires concerning either the examination or status of the application should be directed to the Technology Center.

Joan Olszewski

Joan Olszewski
Petitions Examiner
Office of Petitions

cc: Mr. F. Stebin Horne
3557 Vineville Avenue
Macon, Georgia 31204

UNITED STATES PATENT AND TRADEMARK OFFICE

UNITED STATES DEPARTMENT OF COMMERCE
United States Patent and Trademark Office
Address: COMMISSIONER FOR PATENTS
P.O. Box 1450
Alexandria, Virginia 22313-1450
www.uspto.gov

APPLICATION NO.	FILING DATE	FIRST NAMED INVENTOR	ATTORNEY DOCKET NO.	CONFIRMATION NO.
12/052,298	03/20/2008	Takeshi SUZUKI	OOCL-411 (US-P2734)	2145

7590 03/24/2010
STRAUB & POKOTYLO
788 Shrewsbury Avenue
TINTON FALLS, NJ 07724

EXAMINER
YE, LIN

ART UNIT	PAPER NUMBER
2622	

MAIL DATE	DELIVERY MODE
03/24/2010	PAPER

DECISION GRANTING PETITION UNDER 37 CFR 1.138(d)

The declaration of express abandonment is recognized

This is in response to the petition under 37 CFR 1.138(d), requesting for a refund of any previously paid search fee and excess claims fee in the above-identified application.

The petition is granted.

The express abandonment is recognized. Any previously paid search fee and excess claims fee are hereby refunded.

Telephone inquiries should be directed to the Office of Data Management at (571) 272-4200.

Tomi Farmer

Patent Publication Branch
Office of Data Management

Adjustment date: 03/24/2010 NFARMER
03/21/2020 INTEFSW 00001088 501049 12052298
32 FC:1111 510.00 CR

FORM PET651G (Rev. 08/07)

UNITED STATES PATENT AND TRADEMARK OFFICE

Commissioner for Patents
United States Patent and Trademark Office
P.O. Box 1450
Alexandria, VA 22313-1450
www.uspto.gov

MAIL

APR 22 2008
DIRECTOR'S OFFICE
TECHNOLOGY CENTER 2600

GREENBERG TRAURIG, LLP
ONE INTERNATIONAL PLACE, 20th FL
ATTN: PATENT ADMINISTRATOR
BOSTON MA 02110

In re Application of:
FEIN, GENE, et al.
Serial No.: 12/052,345
Filed: March 20, 2008

Title: **REDUNDANT DATA FORWARDING STORAGE**

DECISION ON PETITION TO MAKE SPECIAL FOR NEW APPLICATION UNDER 37 C.F.R. § 1.102 & M.P.E.P. § 708.02

This is a decision on the petition filed on March 20, 2008 to make the above-identified application special for accelerated examination procedure under 37 C.F.R. § 1.102(d).

The petition to make the application special is **DENIED**.

REGULATION AND PRACTICE

To be eligible for accelerated examination under 37 C.F.R. § 1.102(d) and pursuant to the "Change to Practice for Petitions in Patent Applications to Make Special and for Accelerated Examination" published in the Federal Register on June 26, 2006 (71 Fed. Reg. 36323), the following conditions must be satisfied:

1. The application must be a non-reissue utility or design application filed under 37 CFR 1.111(a);
2. The application, the petition and the required fees must be filed electronically using the USPTO's electronic filing system (EFS), or EFS-web; if not filed electronically, a statement asserting that EFS and EFS-web were not available during the normal business hours;
3. The application, at the time of filing, must be complete under 37 CFR 1.51 and in condition for examination;
4. The application must contain three or fewer independent claims and twenty or fewer total claims and the claims must be directed to a single invention.

The application as filed is not eligible for accelerated examination under 37 C.F.R. § 1.102(d) because the application, at the time of filing, was not complete. A "Notice to File Missing Parts of Nonprovisional Application" was mailed on April 17, 2008.

Therefore, the petition is denied because the application was not complete at the time of filing as per item 3 above. After the application is considered complete by the Office of Initial Patent Examination (OIPE), it will be taken up by the examiner for action in its regular turn.

Any inquiry regarding this decision should be directed to Michael Horabik, Quality Assurance Specialist, at (571) 272-3068.

Michael Horabik
Quality Assurance Specialist
Technology Center 2600
Communications

UNITED STATES PATENT AND TRADEMARK OFFICE

Commissioner for Patents
United States Patent and Trademark Office
P.O. Box 1450
Alexandria, VA 22313-1450
www.uspto.gov

J C PATENTS
4 VENTURE, SUITE 250
IRVINE CA 92618

COPY MAILED

NOV 1 0 2009

OFFICE OF PETITIONS

In re Application of	:	
Yang et al.	:	
Application No. 12/052,348	:	ON PETITION
Filed: March 20, 2008	:	
Attorney Docket No. JCLA25475	:	

This is a notice regarding your request for acceptance of a fee deficiency submission under 37 CFR 1.28. On September 1, 1998, the Court of Appeals for the Federal Circuit held that 37 CFR 1.28(c) is the sole provision governing the time for correction of the erroneous payment of the issue fee as a small entity. **See DH Technology v. Synergystex International, Inc. 154 F.3d 1333, 47 USPQ2d 1865 (Fed. Cir. Sept. 1, 1998).**

The Office no longer investigates or rejects original or reissue applications under 37 CFR 1.56. **1098 Off. Gaz. Pat. Office 502 (January 3, 1989)**. Therefore, nothing in this Notice is intended to imply that an investigation was done.

Your fee deficiency submission under 37 CFR 1.28 is hereby **ACCEPTED**.

This application is no longer entitled to small entity status. Accordingly, all future fees paid in this application must be paid at the large entity rate.

Telephone inquiries concerning this decision should be directed to Joan Olszewski at (571) 272-7751.

/Liana Walsh/
Liana Walsh
Petitions Examiner
Office of Petitions

UNITED STATES PATENT AND TRADEMARK OFFICE

Commissioner for Patents
United States Patent and Trademark Office
P.O. Box 1450
Alexandria, VA 22313-1450
www.uspto.gov

ROSENBAUM & ASSOCIATES, P.C.
650 DUNDEE ROAD
SUITE #380
NORTHBROOK IL 60062

COPY MAILED

SEP 29 2008

OFFICE OF PETITIONS

In re Application of
Isse, et al.
Application No. 12/052,424
Filed: March 20, 2008
Atty. Dkt. No.: 6138-006

: DECISION REFUSING STATUS
: UNDER 37 CFR 1.47(a)

This decision is in response to the petition under 37 CFR 1.47(a) filed August 4, 2008.

The petition under 37 CFR 1.47(a) is DISMISSED.

Petitioners are given TWO MONTHS from the mailing date of this decision to reply, correcting the below-noted deficiencies. Any reply should be entitled "Request for Reconsideration of Petition Under 37 CFR 1.47(a)," and should only address the deficiencies noted herein. The reply under 37 CFR 1.47(a) may include an oath or declaration executed by the non-signing inventors. Any extensions of time will be governed by 37 CFR 1.136(a).

A grantable petition under 37 CFR 1.47(a) requires: (1) proof that the non-signing inventor cannot be reached or refuses to sign the oath or declaration after having been presented with the application papers (specification, claims and drawings); (2) an acceptable oath or declaration in compliance with 35 U.S.C. §§ 115 and 116; (3) the petition fee; and (4) a statement of the last known address of the non-signing inventor.

The instant petition fails to satisfy requirement (2) set forth above.

An acceptable oath or declaration for the patent application in compliance with 37 CFR 1.63 and 1.64 has not been presented. The declaration presented is unacceptable as it fails to comply with the requirement set forth at 37 CFR 1.63(b)(3). See, also, 1327 OG 112 (Effective June 1, 2008)(the United States Patent and Trademark Office (Office) will no longer accept as complying with 37 CFR 1.63(b)(3) an oath or declaration that does not acknowledge a duty to disclose information material to patentability as defined in 37 CFR 1.56. All oaths or declarations filed on or after June 1, 2008, will be required to include the language expressly set forth in 37 CFR 1.63, including that in 37 CFR 1.63(b)(3). This notice applies to oaths or declarations filed in all nonprovisional patent applications, including reissue applications.)

A new oath or declaration executed by the available inventors is required upon renewed petition. Petitioners are reminded that the wording of an oath or declaration cannot be amended, altered or changed in any manner after it has been signed. Accordingly, a new oath or declaration executed

by the available inventors on behalf of themselves and the non-signing inventor must be submitted in compliance with 37 CFR 1.63, 1.64, and 1.67 must be submitted.

The required petition fee is $200.00. Petitioners to date have submitted $130.00. The remaining fee due has been charged to petitioners' deposit account as authorized.

Further correspondence with respect to this matter should be addressed as follows:

By mail:
Mail Stop Petition
Commissioner for Patents
P.O. Box 1450
Alexandria, VA 22313-1450

By facsimile:
(571) 273-8300

By hand:
U.S. Patent and Trademark Office
Customer Service Window
Mail Stop Petition
Randolph Building
401 Dulany Street
Alexandria, VA 22314

Telephone inquiries related to this decision may be directed to the undersigned at (571) 272-3205.

Alesia M. Brown
Petitions Attorney
Office of Petitions

UNITED STATES PATENT AND TRADEMARK OFFICE

COMMISSIONER FOR PATENTS
UNITED STATES PATENT AND TRADEMARK OFFICE
P.O. BOX 1450
ALEXANDRIA, VA 22313-1450
www.uspto.gov

ROSENBAUM & ASSOCIATES, P.C.
650 DUNDEE ROAD
SUITE #380
NORTHBROOK IL 60062

COPY MAILED

MAR 17 2009

OFFICE OF PETITIONS

In re Application of	:	
Isse, et al.	:	DECISION GRANTING STATUS
Application No. 12/052,424	:	UNDER 37 CFR 1.47(a)
Filed: March 20, 2008	:	
Attorney Docket No. 6138-006	:	

This is in response to the renewed petition under 37 CFR 1.47(a), filed December 29, 2008.

The petition is **GRANTED.**

Petitioner has shown that the non-signing inventor has refused to join in the filing of the above-identified application.

The application and papers have been reviewed and found in compliance with 37 CFR 1.47(a). This application is hereby accorded Rule 1.47(a) status.

As provided in 37 CFR 1.47(c), this Office will forward notice of this application's filing to the non-signing inventor at the address given in the petition. Notice of the filing of this application will also be published in the Official Gazette.

This application is being referred to the Office of Initial Patent Examination for pre-examination processing.

Telephone inquiries regarding this decision should be directed to the undersigned at (571) 272-3205.

/ALESIA M. BROWN/
Alesia M. Brown
Petitions Attorney
Office of Petitions

UNITED STATES PATENT AND TRADEMARK OFFICE

COMMISSIONER FOR PATENTS
UNITED STATES PATENT AND TRADEMARK OFFICE
P.O. BOX 1450
ALEXANDRIA, VA 22313-1450
www.uspto.gov

Alwin Kolster
3185 Palisades Drive
Corona, California 92882.

COPY MAILED

MAR 17 2009

OFFICE OF PETITIONS

In re Application of
Isse, et al.
Application No. 12/052,424
Filed: March 20, 2008
Attorney Docket No. 6138-006

Dear Sir:

You are named as a joint inventor in the above-identified United States patent application, filed under the provisions of 35 U.S.C. 116 (United States Code), and 37 CFR 1.47(a), Rules of Practice in Patent Cases. Should a patent be granted on the application you will be designated therein as a joint inventor.

As a named inventor you are entitled to inspect any paper in the file wrapper of the application, order copies of all or any part thereof (at a prepaid cost per 37 CFR 1.19) or make your position of record in the application. Alternatively, you may arrange to do any of the preceding through a registered patent attorney or agent presenting written authorization from you. If you care to join the application, counsel of record (see below) would presumably assist you. Joining the application would entail the filing of an appropriate oath or declaration by you pursuant to 37 CFR 1.63.

Telephone inquiries regarding this communication should be directed to the undersigned at (571) 272-3205. Requests for information regarding your application should be directed to the File Information Unit at (703) 308-2733. Information regarding how to pay for and order a copy of the application, or a specific paper in the application, should be directed to the Certification Division at (571) 272-3150 or 1 (800) 972-6382 (outside the Washington, DC area).

/ALESIA M. BROWN/
Alesia M. Brown
Petitions Attorney
Office of Petitions

cc: ROSENBAUM & ASSOCIATES, P.C.
650 DUNDEE ROAD
SUITE #380
NORTHBROOK IL 60062

UNITED STATES PATENT AND TRADEMARK OFFICE

Commissioner for Patents
United States Patent and Trademark Office
P.O. Box 1450
Alexandria, VA 22313-1450
www.uspto.gov

SQUIRE, SANDERS & DEMPSEY LLP
1 MARITIME PLAZA
SUITE 300
SAN FRANCISCO CA 94111

COPY MAILED

SEP 15 2008

OFFICE OF PETITIONS

In re Application of	:	
Hsu et al.	:	DECISION NOTING JOINDER OF
Application No. 12/052,452	:	INVENTOR AND PETITION
Filed: March 20, 2008	:	UNDER 37 CFR 1.47(a)
Attorney Docket No. 50623.619	:	

This decision is in response to the petitions under 37 CFR 1.47(a) filed on August 20, 2008 and supplemented on September 8, 2008.

In light of petitioner's request to withdraw the August 20, 2007 petition under 37 CFR 1.47 and the submission of a fully executed declaration, the application does not have any Rule 1.47 status and no such status should appear on the record for this file.

The petition is **DISMISSED AS MOOT**.

Further consideration under § 1.47(a) is not necessary. This application need not be returned to this Office for any further consideration under 37 CFR 1.47(a).

This application is being referred to the Office of Patent Application Processing

Telephone inquiries should be directed to the undersigned at (571) 272-3215.

Charlema Grant

Charlema Grant
Petitions Attorney
Office of Petitions

UNITED STATES PATENT AND TRADEMARK OFFICE

Commissioner for Patents
United States Patent and Trademark Office
P.O. Box 1450
Alexandria, VA 22313-1450
www.uspto.gov

WEAVER AUSTIN VILLENEUVE & SAMPSON LLP
P.O. BOX 70250
OAKLAND, CA 94612-0250

COPY MAILED

JUL 2 0 2009

OFFICE OF PETITIONS

In re Application of	:	
Mulugeta Zerfu Wudu et al	:	
Application No. 12/052,476	:	DECISION ON PETITION
Filed: March 20, 2008	:	TO WITHDRAW
Attorney Docket No. MSOLP009	:	FROM RECORD
	:	

This is a decision on the Request to Withdraw as attorney or agent under 37 C.F.R. § 1.36(b) or 37 C.F.R. § 10.40 filed June 10, 2009.

The request is **APPROVED**.

A review of the file record indicates that Customer Number 70408: (1) does not have power of attorney in this patent application; and (2) has been employed or otherwise engaged in the proceedings in this patent application. In view of the present decision, Customer Number 70408 has been withdrawn from the present application and may not prepare or submit papers under 37 C.F.R. § 1.34, or correspond in any manner in this application unless appointed in an acceptable power of attorney under 37 C.F.R. § 1.32(b).

Telephone inquires concerning this decision should be directed to Irvin Dingle at 571-272-3210.

Irvin Dingle
Petitions Examiner
Office of Petitions

cc: John P. Wagner, Jr.
123 Westridge Drive
Watsonville, CA 95076

UNITED STATES PATENT AND TRADEMARK OFFICE

Commissioner for Patents
United States Patent and Trademark Office
P.O. Box 1450
Alexandria, VA 22313-1450
www.uspto.gov

MORGAN, LEWIS & BOCKIUS, LLP (SF)
ONE MARKET SPEAR STREET TOWER
SAN FRANCISCO CA 94105

MAILED

MAR 09 2010

OFFICE OF PETITIONS

In re Application of	:	
Robert Kelly	:	DECISION ON PETITION
Application No. 12/052,566	:	TO WITHDRAW
Filed: March 20, 2008	:	FROM RECORD
Attorney Docket No. 67411-5005-US	:	

This is a decision on the Request to Withdraw as attorney or agent of record under 37 C.F.R. § 1.36(b) filed December 31, 2009, which is being treated as a request to withdraw from employment in a proceeding before the Office under 37 C.F.R. § 10.40.

The request is **DISMISSED**.

A review of the file record indicates that Morgan, Lewis & Bockius, LLP (SF) does not have power of attorney in this patent application. Accordingly, the request to withdraw under 37 C.F.R. § 1.36(b) is not applicable.

The request to change the correspondence address of record is not accepted in view of Morgan, Lewis & Bockius, LLP (SF) not having power of attorney. See MPEP §§ 601.03 and 405. Therefore, all future communications from the Office will continue to be directed to the above-listed address until otherwise notified by applicant.

Currently, there is no outstanding Office action that requires a reply.

Telephone inquires concerning this decision should be directed to the undersigned at 571-272-7751.

Joan Olszewski

Joan Olszewski
Petitions Examiner
Office of Petitions

UNITED STATES PATENT AND TRADEMARK OFFICE

Commissioner for Patents
United States Patent and Trademark Office
P.O. Box 1450
Alexandria, VA 22313-1450
www.uspto.gov

SNELL & WILMER LLP (OC)
600 ANTON BOULEVARD
SUITE 1400
COSTA MESA, CA 92626

COPY MAILED

JUL 2 1 2008

OFFICE OF PETITIONS

In re Application of
George H. Heaven Jr. et al
Application No. 12/052,656
Filed: March 20, 2008
Attorney Docket No. 44243-0436

DECISION ON PETITION

This is a decision on the petition under 37 CFR 1.182, filed April 21, 2008, to change the order of the names of the inventors.

The petition is **GRANTED**.

Office records have been corrected to reflect the change in the order of the named inventors. A corrected Filing Receipt, which sets forth the desired order of the named inventors, accompanies this decision on petition.

As authorized, the $400 fee for the petition under 37 CFR 1.182 has been assessed to petitioner's deposit account.

This application is being referred to Technology Center AU 3644 for examination in due course.

Telephone inquiries regarding this decision should be directed to the undersigned at (571) 272-3210.

Irvin Dingle
Petitions Examiner
Office of Petitions

ATTACHMENT: Corrected Filing Receipt

UNITED STATES PATENT AND TRADEMARK OFFICE

UNITED STATES DEPARTMENT OF COMMERCE
United States Patent and Trademark Office
Address: COMMISSIONER FOR PATENTS
P.O. Box 1450
Alexandria, Virginia 22313-1450
www.uspto.gov

APPLICATION NUMBER	FILING or 371(c) DATE	GRP ART UNIT	FIL FEE REC'D	ATTY.DOCKET.NO	TOT CLAIMS	IND CLAIMS
12/052,656	03/20/2008	3644	690	44243-0436	26	4

CONFIRMATION NO. 2815

CORRECTED FILING RECEIPT

21611
SNELL & WILMER LLP (OC)
600 ANTON BOULEVARD
SUITE 1400
COSTA MESA, CA 92626

OC000000031067109

Date Mailed: 07/18/2008

Receipt is acknowledged of this non-provisional patent application. The application will be taken up for examination in due course. Applicant will be notified as to the results of the examination. Any correspondence concerning the application must include the following identification information: the U.S. APPLICATION NUMBER, FILING DATE, NAME OF APPLICANT, and TITLE OF INVENTION. Fees transmitted by check or draft are subject to collection. Please verify the accuracy of the data presented on this receipt. **If an error is noted on this Filing Receipt, please submit a written request for a Filing Receipt Correction. Please provide a copy of this Filing Receipt with the changes noted thereon. If you received a "Notice to File Missing Parts" for this application, please submit any corrections to this Filing Receipt with your reply to the Notice. When the USPTO processes the reply to the Notice, the USPTO will generate another Filing Receipt incorporating the requested corrections**

Applicant(s)

George H. Heaven JR., North Las Vegas, NV;
Michael K. Walden, North Las Vegas, NV;

Assignment For Published Patent Application

LTAS HOLDINGS LLC, North Las Vegas, NV

Power of Attorney: The patent practitioners associated with Customer Number 21611

Domestic Priority data as claimed by applicant

This application is a CON of 11/608,198 12/07/2006 PAT 7,350,749
which is a CON of 10/872,743 06/21/2004 PAT 7,185,848

Foreign Applications

If Required, Foreign Filing License Granted: 04/01/2008

The country code and number of your priority application, to be used for filing abroad under the Paris Convention, is **US 12/052,656**

Projected Publication Date: Not Applicable

Non-Publication Request: No

Early Publication Request: No
**** SMALL ENTITY ****

Title

MASS TRANSFER SYSTEM FOR STABILIZING AN AIRSHIP AND OTHER VEHICLES SUBJECT TO PITCH AND ROLL MOMENTS

Preliminary Class

244

PROTECTING YOUR INVENTION OUTSIDE THE UNITED STATES

Since the rights granted by a U.S. patent extend only throughout the territory of the United States and have no effect in a foreign country, an inventor who wishes patent protection in another country must apply for a patent in a specific country or in regional patent offices. Applicants may wish to consider the filing of an international application under the Patent Cooperation Treaty (PCT). An international (PCT) application generally has the same effect as a regular national patent application in each PCT-member country. The PCT process **simplifies** the filing of patent applications on the same invention in member countries, but **does not result** in a grant of "an international patent" and does not eliminate the need of applicants to file additional documents and fees in countries where patent protection is desired.

Almost every country has its own patent law, and a person desiring a patent in a particular country must make an application for patent in that country in accordance with its particular laws. Since the laws of many countries differ in various respects from the patent law of the United States, applicants are advised to seek guidance from specific foreign countries to ensure that patent rights are not lost prematurely.

Applicants also are advised that in the case of inventions made in the United States, the Director of the USPTO must issue a license before applicants can apply for a patent in a foreign country. The filing of a U.S. patent application serves as a request for a foreign filing license. The application's filing receipt contains further information and guidance as to the status of applicant's license for foreign filing.

Applicants may wish to consult the USPTO booklet, "General Information Concerning Patents" (specifically, the section entitled "Treaties and Foreign Patents") for more information on timeframes and deadlines for filing foreign patent applications. The guide is available either by contacting the USPTO Contact Center at 800-786-9199, or it can be viewed on the USPTO website at http://www.uspto.gov/web/offices/pac/doc/general/index.html.

For information on preventing theft of your intellectual property (patents, trademarks and copyrights), you may wish to consult the U.S. Government website, http://www.stopfakes.gov. Part of a Department of Commerce initiative, this website includes self-help "toolkits" giving innovators guidance on how to protect intellectual property in specific countries such as China, Korea and Mexico. For questions regarding patent enforcement issues, applicants may call the U.S. Government hotline at 1-866-999-HALT (1-866-999-4158).

LICENSE FOR FOREIGN FILING UNDER

Title 35, United States Code, Section 184

Title 37, Code of Federal Regulations, 5.11 & 5.15

GRANTED

The applicant has been granted a license under 35 U.S.C. 184, if the phrase "IF REQUIRED, FOREIGN FILING LICENSE GRANTED" followed by a date appears on this form. Such licenses are issued in all applications where

the conditions for issuance of a license have been met, regardless of whether or not a license may be required as set forth in 37 CFR 5.15. The scope and limitations of this license are set forth in 37 CFR 5.15(a) unless an earlier license has been issued under 37 CFR 5.15(b). The license is subject to revocation upon written notification. The date indicated is the effective date of the license, unless an earlier license of similar scope has been granted under 37 CFR 5.13 or 5.14.

This license is to be retained by the licensee and may be used at any time on or after the effective date thereof unless it is revoked. This license is automatically transferred to any related applications(s) filed under 37 CFR 1.53(d). This license is not retroactive.

The grant of a license does not in any way lessen the responsibility of a licensee for the security of the subject matter as imposed by any Government contract or the provisions of existing laws relating to espionage and the national security or the export of technical data. Licensees should apprise themselves of current regulations especially with respect to certain countries, of other agencies, particularly the Office of Defense Trade Controls, Department of State (with respect to Arms, Munitions and Implements of War (22 CFR 121-128)); the Bureau of Industry and Security, Department of Commerce (15 CFR parts 730-774); the Office of Foreign AssetsControl, Department of Treasury (31 CFR Parts 500+) and the Department of Energy.

NOT GRANTED

No license under 35 U.S.C. 184 has been granted at this time, if the phrase "IF REQUIRED, FOREIGN FILING LICENSE GRANTED" DOES NOT appear on this form. Applicant may still petition for a license under 37 CFR 5.12, if a license is desired before the expiration of 6 months from the filing date of the application. If 6 months has lapsed from the filing date of this application and the licensee has not received any indication of a secrecy order under 35 U.S.C. 181, the licensee may foreign file the application pursuant to 37 CFR 5.15(b).

UNITED STATES PATENT AND TRADEMARK OFFICE

Commissioner for Patents
United States Patent and Trademark Office
P.O. Box 1450
Alexandria, VA 22313-1450
www.uspto.gov

FENWICK & WEST LLP
SILICON VALLEY CENTER
801 CALIFORNIA STREET
MOUNTAIN VIEW CA 94041

MAILED

MAR 2 9 2010

OFFICE OF PETITIONS

In re Application of	:	
Jiezhou Liu	:	DECISION ON PETITION
Application No. 12/052,704	:	TO WITHDRAW
Filed: March 20, 2008	:	FROM RECORD
Attorney Docket: 25745-13983	:	

This is a decision on the Request to Withdraw as attorney or agent of record under 37 C.F.R. § 1.36(b), filed January 22, 2010.

The request is **APPROVED**.

A grantable request to withdraw as attorney/agent of record must be signed by every attorney/agent seeking to withdraw or contain a clear indication that one attorney is signing on behalf of another/others. The Office will require the practitioner(s) to certify that he, she or they have: (1) given reasonable notice to the client, prior to the expiration of the reply period, which the practitioner(s) intends to withdraw from employment; (2) delivered to the client or a duly authorized representative of the client all papers and property (including funds) to which the client is entitled; and (3) notified the client of any replies that may be due and the time frame within which the client must respond, pursuant to 37 CFR 10.40 (c).

The request was signed by Jie Zhang, on behalf of all practitioners of record associated with Customer Number 00758.

Customer Number 00758 has been withdrawn as attorney of record. Applicant is reminded that there is no attorney of record at this time.

The correspondence address of record has been changed and the new correspondence address is the address indicated below.

There are no outstanding Office actions that require a reply from the applicant.

Telephone inquires concerning this decision should be directed to the undersigned at (571) 272-6059. All other inquires concerning either the examination or status of the application should be directed to the Technology Center.

A. Kelley

Alicia Kelley
Petitions Examiner
Office of Petitions

cc: JIEZHOU LIU
1270 CORONADO DRIVE, #24
SUNNYVALE, CA 94086

UNITED STATES PATENT AND TRADEMARK OFFICE

UNITED STATES DEPARTMENT OF COMMERCE
United States Patent and Trademark Office
Address: COMMISSIONER FOR PATENTS
P.O. Box 1450
Alexandria, Virginia 22313-1450
www.uspto.gov

APPLICATION NUMBER	FILING OR 371(C) DATE	FIRST NAMED APPLICANT	ATTY. DOCKET NO./TITLE
12/052,704	03/20/2008	Jiezhou Liu	25745-13983

CONFIRMATION NO. 2915

POWER OF ATTORNEY NOTICE

758
FENWICK & WEST LLP
SILICON VALLEY CENTER
801 CALIFORNIA STREET
MOUNTAIN VIEW, CA 94041

OC000000040844691

Date Mailed: 03/29/2010

NOTICE REGARDING CHANGE OF POWER OF ATTORNEY

This is in response to the Power of Attorney filed 01/22/2010.

- The withdrawal as attorney in this application has been accepted. Future correspondence will be mailed to the new address of record. 37 CFR 1.33.

/atkelley/

Office of Data Management, Application Assistance Unit (571) 272-4000, or (571) 272-4200, or 1-888-786-0101

UNITED STATES PATENT AND TRADEMARK OFFICE

Commissioner for Patents
United States Patent and Trademark Office
P.O. Box 1450
Alexandria, VA 22313-1450
www.uspto.gov

FRENKEL & ASSOCIATES
3975 UNIVERSITY DR., STE. 330
FAIRFAX VA 22030

MAILED

JUN 2 1 2010

OFFICE OF PETITIONS

In re Application of	:	
Shih-Chung LOR, et al	:	
Application No. 12/052,785	:	DECISION ON PETITION
Filed: March 21, 2008	:	TO WITHDRAW
Attorney Docket No. FACH 08-3		FROM RECORD
	:	

This is a decision on the Request to Withdraw as attorney or agent of record under 37 C.F.R. § 1.36(b), filed April 28, 2010.

The request is **NOT APPROVED**.

A grantable request to withdraw as attorney/agent of record must be signed by every attorney/agent seeking to withdraw or contain a clear indication that one attorney is signing on behalf of another/others. The Office requires the practitioner(s) requesting withdrawal to certify that he, she, or they have: (1) given reasonable notice to the client, prior to the expiration of the response period, that the practitioner(s) intends to withdraw from employment; (2) delivered to the client or a duly authorized representative of the client all papers and property (including funds) to which the client is entitled; and (3) notified the client of any responses that may be due and the time frame within which the client must respond, pursuant 37 CFR 10.40(c).

The request cannot be approved because the attorneys of record were not appointed through use of Customer Number 31764, as indicated. In this regard, since the attorneys of record were appointed by naming each attorney individually, any future request should indicate the same designation for withdrawing the attorneys.

Further, the Office will either change the correspondence address of record to the most current address information provided for the assignee of the entire interest who properly became of record under 37 CFR 3.71 or, if no assignee, the most current address information provided for the first named inventor. Accordingly, since the change of address is not that of an assignee who has properly been made of record under 37 CFR 3.71 or the inventor, the request to withdraw as attorney /agent cannot be approved.

In order to request or take action in a patent matter, the assignee must establish its ownership of the patent to the satisfaction of the Director. In this regard, a Statement under 37 CFR 3.73(b) must have either: (i) documentary evidence of a chain of title from the original owner to the assignee (*e.g.,* copy of an executed assignment), and a statement affirming that the documentary

evidence of the chain of title from the original owner to the assignee was or concurrently is being submitted for recordation pursuant to § 3.11; or (ii) a statement specifying where documentary evidence of a chain of title from the original owner to the assignee is recorded in the assignment records of the Office (*e.g.*, reel and frame number).

All future communications from the Office will be directed to the address indicated below until otherwise notified by applicant.

Telephone inquiries concerning this decision should be directed to the undersigned at 571-272-6735.

/dcg/
Diane C. Goodwyn
Petitions Examiner
Office of Petitions

UNITED STATES PATENT AND TRADEMARK OFFICE

Commissioner for Patents
United States Patent and Trademark Office
P.O. Box 1450
Alexandria, VA 22313-1450
www.uspto.gov

HAHN LOESER & PARKS, LLP
One GOJO Plaza
Suite 300
AKRON OH 44311-1076

MAILED

MAY 20 2010

OFFICE OF PETITIONS

In re Application of Mary Ann Oakes Application No. 12/052,794 Filed: March 21, 2008 Attorney Docket No. **201993.00002**	DECISION ON PETITION TO WITHDRAW FROM RECORD

This is a decision on the Request to Withdraw as attorney or agent of record under 37 CFR § 1.36(b), filed February 15, 2010.

The request is **NOT APPROVED**.

A review of the file record indicates that Alfred Y. Chu or any attorneys/agents associated with Customer Number 21324 does not have power of attorney or was ever given power of attorney in the above-identified application. Accordingly, the request to withdraw under 37 CFR § 1.36(b) is not applicable.

According to our records the Customer Number has been listed as the Representative Information in the application data sheet. However, providing the information in the application data sheet does not constitute as a power of attorney in the application. ***See 37 CFR § 1.76(b)(4)***.

All future communications from the Office will continue to be directed to the address of record until otherwise properly notified by the applicant.

Telephone inquires concerning this decision should be directed to the undersigned at 571-272-4584.

/JoAnne Burke/
JoAnne Burke
Petitions Examiner
Office of Petitions

UNITED STATES PATENT AND TRADEMARK OFFICE

UNITED STATES DEPARTMENT OF COMMERCE
United States Patent and Trademark Office
Address: COMMISSIONER FOR PATENTS
P.O. Box 1450
Alexandria, Virginia 22313-1450
www.uspto.gov

BAKER & DANIELS LLP
202 South Michigan Street
Suite 1400
South Bend, IN 46601

Mail Date: 04/21/2010

Applicant	: Barton E. Bennett	: DECISION ON REQUEST FOR
Patent Number	: 7667981	: RECALCULATION of PATENT
Issue Date	: 02/23/2010	: TERM ADJUSTMENT IN VIEW
Appliction No	: 12/052,805	: OF WYETH AND NOTICE OF INTENT TO
Filed	: 03/21/2008	: ISSUE CERTIFICATE OF CORRECTION
		:

The Request for Recalculation is **GRANTED** to the extent indicated.

The patent term adjustment has been determined to be **0** days. The USPTO will *sua sponte* issue a certificate of correction reflecting the amount of PTA days determined by the recalculation.

Prior to the issuance of the certificate of correction, the USPTO will afford patentee an opportunity to be heard and request reconsideration. Accordingly, patentee has **one month or thirty (30) days**, whichever is longer, to file a request for reconsideration of this patent term adjustment calculation. See 35 U.S.C. 154(b)(3)(B)(ii) and 37 CFR 1.322(a)(4). No extensions of time will be granted under 37 CFR 1.136.

Patentee should use document code PET.OP if electronically filing a request for reconsideration of this patent term adjustment calculation. The patentee must also include the information required by 37 CFR 1.705(b)(2) and the fee required by 37 CFR 1.18(e). If patentee does not file a timely request for reconsideration of this patent term adjustment calculation including the information required by 37 CFR 1.705(b)(2) and the fee required by 37 CFR 1.18(e), the USPTO will issue a certificate of correction reflecting the PTA determination noted above.

Patentee should be aware that in order to preserve the right to review in the United States District Court for the District of Columbia of the USPTO patent term adjustment determination, patentee must ensure that he or she also take the steps required under 35 U.S.C. 154(b)(4)(A) in a timely manner. Nothing in the request for recalculation should be construed as providing an alternative time frame for commencing a civil action under 35 U.S.C. 154(b)(4)(A).

Any questions concerning this decision should be directed to the Office of Patent Legal Administration at 571-272-7702.

UNITED STATES PATENT AND TRADEMARK OFFICE

UNITED STATES DEPARTMENT OF COMMERCE
United States Patent and Trademark Office
Address: COMMISSIONER FOR PATENTS
P.O. Box 1450
Alexandria, Virginia 22313-1450
www.uspto.gov

APPLICATION NO.	FILING DATE	FIRST NAMED INVENTOR	ATTORNEY DOCKET NO.	CONFIRMATION NO.
12/052,807	03/21/2008	Thomas Dyer	FIS920080036US1	3099

29371 7590 05/02/2008
CANTOR COLBURN LLP - IBM FISHKILL
20 Church Street
22nd Floor
Hartford, CT 06103

EXAMINER
BARNES, SETH W

ART UNIT	PAPER NUMBER
2822	

MAIL DATE	DELIVERY MODE
05/02/2008	PAPER

Please find below and/or attached an Office communication concerning this application or proceeding.

The time period for reply, if any, is set in the attached communication.

UNITED STATES PATENT AND TRADEMARK OFFICE

Commissioner for Patents
United States Patent and Trademark Office
P.O. Box 1450
Alexandria, VA 22313-1450
www.uspto.gov

CANTOR COLBURN LLP
IBM FISHKILL
20 Church Street
22nd Floor
Hartford CT 06103

In re Application of: Thomas DYER et al. Serial No.: 12/052,807 Filed: March 21, 2008 Title.: SILICON ON INSULATOR DEVICES HAVING BODY-TIED-TO-SOURCE AND METHODS OF MAKING	: : : : : : :	DECISION ON PETITION TO MAKE SPECIAL FOR NEW APPLICATION UNDER 37 C.F.R. § 1.102 & M.P.E.P. § 708.02

This is a decision on the petition to make the above-identified application special for accelerated examination procedure under 37 C.F.R. § 1.102(d) filed March 21, 2008.

The petition to make the application special is GRANTED.

The application is eligible for accelerated examination and the petition complies with the conditions for granting the application special status pursuant to the "Change to Practice for Petitions in Patent Applications to Make Special and for Accelerated Examination" published June 26, 2006, in the Federal Register. (71 Fed. Reg. 36323).

The prosecution of the instant application will be conducted expeditiously according to the following guidelines.

1. The application will be docketed to an examiner and taken up for action within two weeks of the date of this decision.

2. Restriction Practice:
   If the examiner determines that the claims are not directed to a single invention, a telephone request to elect one single invention will be made pursuant to MPEP 812.01. As a prerequisite to the grant of this petition, the applicant has agreed to make an oral election, by telephone, without traverse. If the applicant refuses to make an election without traverse, or the examiner cannot reach the applicant after a reasonable effort, the examiner will treat the first claimed invention (invention defined by claim 1) as having being constructively elected without traverse for examination.

3. Office action:
   If it is determined that, after appropriate consultation, there is a potential rejection or any other issue to be addressed, the examiner will telephone the applicant and arrange an interview to discuss and resolve the issue. An Office action, other than a Notice of Allowance and Fee(s) Due (Notice of Allowance), will not be issued unless either: 1) an interview was conducted but did not result in agreed to action that places the application in condition for allowance, or, 2) a determination is made that an interview would be unlikely to result in the application being placed in condition for allowance, and 3) an internal conference has been held to review any rejection of any claim.

4. Time for Reply:
   An Office action other than a Notice of Allowance or a final Office action will set a shortened statutory period of one month or thirty days, whichever is longer, for reply with no extension of time available under 37 CFR 1.136(a). Failure to timely file a reply within this non-extendible period for reply will result in the abandonment of the application.

5. Reply by Applicant:
   A timely reply to an Office action other than the Notice of Allowance must be submitted electronically via EFS or EFS-web and limited to addressing the rejections, objections and requirement made. Any amendment that attempts to: 1) add claims which would result in more than three pending independent claims or more than twenty pending total claims; 2) present claims not encompassed by the pre-examination search or an updated accelerated examination support document; or 3) present claims that are directed a non-elected invention or an invention other than that previously claimed and examined in the application, will be treated as not fully responsive and will not be entered.

   For any amendment to the claims (including any new claim) that is not encompassed by the accelerated examination support document, applicant must provide an updated accelerated examination support document that encompasses the amended or new claims at the time of filing of the amendment.

   To proceed expeditiously with the examination, it is recommended that a reply with amendments made to any claim or with any new claim being added be accompanied by an updated accelerated examination support document or a statement explaining how the amended or new claim is supported by the original accelerated examination support document.

6. Information Disclosure Statement (IDS):
   Any IDS filed during prosecution must be submitted electronically via EFS or EFS-web, accompanied by an updated accelerated examination support document, and be in compliance with 37 CFR 1.97 and 1.98.

7. Post-Allowance Processing:
   To expedite processing of the allowed application into a patent, the applicant must: 1) pay the required fees within one month of the date of the Notice of Allowance, and 2) not file any post allowance papers not required by the Office. In no event may the issue fee be paid and accepted later than three months from the date of the Notice of Allowance.

8. After-Final and Appeal Procedures:
   To expedite prosecution, after receiving the final Office action, applicant must: 1) promptly file a notice of appeal, an appeal brief and appeal fees; and 2) not request a pre-appeal brief conference.

   Any amendment, affidavit or other evidence filed after final Office action must comply with applicable rules and the requirements outlined in numbered paragraphs 5 and 6 above.

   On appeal, the application will proceed according to normal appeal procedures. After appeal, the application will again be treated special.

9. Proceedings Outside the Normal Examination Process:
   If the application becomes involved in a proceeding that is outside the normal examination process (e.g., a secrecy order, national security review, interference proceeding, petitions under 37 CFR 1.181, 182 or 183), the application will be treated special before and after such proceeding.

10. Final Disposition:
    The twelve month goal of this accelerated examination procedure ends with a final disposition. The mailing of a final Office action, a Notice of Allowance, the filing of a Notice of Appeal, or the filing of a Request for Continued Examination (RCE) is the final disposition.

If, during prosecution, a paper is not filed electronically using EFS-web, a reply is filed but is not fully responsive, the application is involved in an appeal, or a proceeding outside normal examination process, the application will still be examined expeditiously, however, the final disposition may occur more than twelve months from the filing of the application.

Any inquiry regarding this decision should be directed to Quality Assurance Specialist Jose' G. Dees at (571) 272-1569.

Jose' G. Dees, Quality Assurance Specialist
Technology Center 2800
Semiconductors, Electrical and Optical
Systems and Components

UNITED STATES PATENT AND TRADEMARK OFFICE

Commissioner for Patents
United States Patent and Trademark Office
P.O. Box 1450
Alexandria, VA 22313-1450
www.uspto.gov

COPY MAILED

OCT 1 4 2005

OFFICE OF PETITIONS

MERCHANT & GOULD PC
P.O. BOX 2903
MINNEAPOLIS MN 55402-0903

In re Application of
William G. Mizuno et al.
Application No. 11/067,301
Filed: February 25, 2005
Attorney Docket No. 163.1828US1

: DECISION ACCORDING STATUS
: UNDER 37 CFR 1.47(a)

This is in response to the petition filed September 20, 2005 under 37 CFR 1.47(a).

The petition under 37 CFR 1.47(a) is **GRANTED**.

The above-identified application was filed on February 25, 2005, without an oath or declaration. Accordingly, on March 21, 2005, a "Notice To File Missing Parts of Application" was mailed, requiring *inter alia* a properly executed oath or declaration.

In response, the instant petition under 37 CFR 1.47(a), an oath or declaration naming William G. Mizuno (deceased) Michael E. Besse and Brenda L. Tjelta as joint inventors but only executed by inventors Besse and Tjelta, fees and a request for a four month extension of time were filed. The petition argues that joint inventor Mizuno is deceased and that the application papers were forwarded to Ellen Voeller, Mr. Mizuno's daughter but that Ms. Voeller has by her actions, refused to cooperate with the filing of the instant application.

A grantable petition under 37 CFR 1.47(a) requires: (1) proof that the non-signing inventor cannot be reached or refuses to sign the oath or declaration after having been presented with the application papers (specification, claims and drawings); (2) an acceptable oath or declaration in compliance with 35 U.S.C. §§ 115 and 116; (3) the petition fee; and (4) a statement of the last known address of the non-signing inventor.

The petition bears proof that the application papers were forwarded to and received by Ms. Voeller and that to date, she has not returned an executed copy of the oath or declaration.

The above-identified application and papers have been reviewed and found in compliance with 37 CFR 1.47(a). In view thereof, this application is hereby accorded Rule 1.47(a) status.

Copied from 11067301 on 04/20/2009

Thus, as provided in Rule 1.47c, this Office will forward notice of this application's filing to the non-signing inventor at the address given in the petition. Notice of the filing of this application will also be published in the Official Gazette.

Please be advised that effective November 22, 2004, the petition fee has been increased to $200.00. Therein, deposit account no. 13-2725 has been charged in the amount of $200.00 for the petition fee, pursuant to 37 CFR 1.17(g). See the Notice published in the Federal Register on September 21, 2004 and in the Official Gazette of the United States Patent and Trademark Office on October 12, 2004.

This matter is being referred to Technology Center 1724 for examination in due course.

Telephone inquiries concerning this matter may be directed to the undersigned Petitions Attorney at (571) 272-3212.

Patricia Faison-Ball

Patricia Faison-Ball
Senior Petitions Attorney
Office of Petitions

Copied from 11067301 on 04/20/2009

UNITED STATES PATENT AND TRADEMARK OFFICE

Commissioner for Patents
United States Patent and Trademark Office
P.O. Box 1450
Alexandria, VA 22313-1450
www.uspto.gov

ELLEN VOELLER
5325 CULVER ROAD
GOLDEN VALLEY, MN 55422

COPY MAILED

OCT 1 4 2005

OFFICE OF PETITIONS

In re Application of
William G. Mizuno et al.
Application No. 11/067,301
Filed: February 25, 2005
For: METHOD FOR TREATING FEEDWATER, FEEDWATER TREATMENT COMPOSITION, AND APPARATUS FOR TREATING FEEDWATER

Dear Ms. Voeller:

You have been identified as the legal representative of William G. Mizuno (deceased), who has been named as a joint inventor in the above identified United States patent application, filed under the provisions of 35 U.S.C. 116 (United States Code), and 37 CFR 1.47(a), Rules of Practice in Patent Cases. Should a patent be granted on the application Mr. Mizuno will be designated therein as a joint inventor.

As the legal representative of a named inventor, you are entitled to inspect any paper in the file wrapper of the application, order copies of all or any part thereof (at a prepaid cost per 37 CFR 1.19) or make your position of record in the application. Alternatively, you may arrange to do any of the preceding through a registered patent attorney or agent presenting written authorization from you. If you care to join the application, counsel of record (see below) would presumably assist you. Joining in the application would entail the filing of an appropriate oath or declaration by you pursuant to 37 CFR 1.63.

Telephone inquiries regarding this communication should be directed to the undersigned Petitions Attorney at (571) 272-3212. Requests for information regarding your application should be directed to the File Information Unit at 703/308-2733. Information regarding how to pay for and order a copy of the application, or a specific paper in the application, should be directed to Certification Division at 703/308-9726 or 1-800-972-6382 (outside the Washington D.C. area).

Patricia Faison-Ball

Patricia Faison-Ball
Senior Petitions Attorney
Office of Petitions

cc:
MERCHANT & GOULD PC
P.O. BOX 2903
MINNEAPOLIS MN 55402-0903

Copied from 11067301 on 04/20/2009

UNITED STATES PATENT AND TRADEMARK OFFICE

Commissioner for Patents
United States Patent and Trademark Office
P.O. Box 1450
Alexandria, VA 22313-1450
www.uspto.gov
DIW Apr-09

ECOLAB INC.
MAIL STOP ESC-F7, 655 LONE OAK DRIVE
EAGAN MN 55121

MAILED

APR 21 2009

OFFICE OF PETITIONS

In re Application of :
Mizuno et al. :
Application Number: 12/052880 : DECISION ON PETITION
Filing Date: 03/21/2008 :
Attorney Docket Number: 1828USC1 :

This is in response to the petition under 37 CFR 1.47(a) filed on March 21, 2008.

The petition is **DISMISSED AS MOOT**.

In accordance with 37 CFR 1.63(d), petitioner has submitted a copy of the executed oath or declaration filed in Application No. 11/067301, filed on February 25, 2005, of which the instant filing is a continuation application. Furthermore, a copy of the decision, mailed on October 14, 2005, granting a petition to accord § 1.47(a) status to prior application No. 11/067,301, has been placed in the file of the present application.

As Rule 1.47(a) status was granted in the prior application, this application is hereby accorded Rule 1.47(a) status.

As no petition is necessary to accord Rule 1.47(a) status in this application, the petition is dismissed as moot. No petition fee is necessary and none has been charged.

As provided in Rule 1.47(c), since notice was provided after the grant of Rule 1.47(a) status in the prior application, the Office is dispensing with the notice provision in this continuation application.

After this decision is mailed, the application will be referred to Technology Center Art Unit 1797 for further processing.

Telephone inquiries related to this decision should be directed to the undersigned at 571-272-3231.

DWood

Douglas I. Wood
Senior Petitions Attorney
Office of Petitions

UNITED STATES PATENT AND TRADEMARK OFFICE

Commissioner for Patents
United States Patent and Trademark Office
P.O. Box 1450
Alexandria, VA 22313-1450
www.uspto.gov

GOLD & RIZVI, P.A.
600 N. PINE ISLAND ROAD
SUITE 450
PLANTATION, FL 33324-1311

COPY MAILED
MAR 3 1 2008

In re Application of

GOLDBAUM, Harold
Application No. 12/052,899
Filed: March 21, 2008
Attorney Docket No. **1352-0500**

DECISION ON PETITION
TO MAKE SPECIAL UNDER
37 CFR 1.102(c)(1)

This is a decision on the petition under 37 CFR 1.102(c)(1), filed March 21, 2008, to make the above-identified application special based on applicant's age as set forth in M.P.E.P. § 708.02, Section IV.

The petition is **GRANTED.**

A grantable petition to make an application special under 37 CFR 1.102(c)(1) and MPEP § 708.02, Section IV: Applicant's Age must be accompanied by evidence showing that at least one of the applicants is 65 years of age, or more, such as a birth certificate or a statement by applicant. No fee is required

The instant petition includes a copy of the inventor's birth certificate as evidence that Harold Goldbaum is over 65 years of age. Accordingly, the above-identified application has been accorded "special" status.

Telephone inquiries concerning this decision should be directed to the undersigned at 571-272-4231.

All other inquiries concerning either the examination or status of the application should be directed to the Technology Center.

This application is being referred to the Office of Initial Patent Examination for processing. This application will be accorded "special" status when pre-examination processing is done.

Michelle R. Eason
Paralegal Specialist
Office of Petitions

UNITED STATES PATENT AND TRADEMARK OFFICE

UNITED STATES DEPARTMENT OF COMMERCE
United States Patent and Trademark Office
Address: COMMISSIONER FOR PATENTS
P.O. Box 1450
Alexandria, Virginia 22313-1450
www.uspto.gov

REISING ETHINGTON P.C.
P O BOX 4390
TROY, MI 48099-4390

Mail Date: 04/21/2010

Applicant	: Bernd Mack	: DECISION ON REQUEST FOR
Patent Number	: 7589836	: RECALCULATION of PATENT
Issue Date	: 09/15/2009	: TERM ADJUSTMENT IN VIEW
Appliction No	: 12/052,915	: OF WYETH AND NOTICE OF INTENT TO
Filed	: 03/21/2008	: ISSUE CERTIFICATE OF CORRECTION
		:

The Request for Recalculation is **GRANTED** to the extent indicated.

The patent term adjustment has been determined to be **49** days. The USPTO will *sua sponte* issue a certificate of correction reflecting the amount of PTA days determined by the recalculation.

Prior to the issuance of the certificate of correction, the USPTO will afford patentee an opportunity to be heard and request reconsideration. Accordingly, patentee has **one month or thirty (30) days**, whichever is longer, to file a request for reconsideration of this patent term adjustment calculation. See 35 U.S.C. 154(b)(3)(B)(ii) and 37 CFR 1.322(a)(4). No extensions of time will be granted under 37 CFR 1.136.

Patentee should use document code PET.OP if electronically filing a request for reconsideration of this patent term adjustment calculation. The patentee must also include the information required by 37 CFR 1.705(b)(2) and the fee required by 37 CFR 1.18(e). If patentee does not file a timely request for reconsideration of this patent term adjustment calculation including the information required by 37 CFR 1.705(b)(2) and the fee required by 37 CFR 1.18(e), the USPTO will issue a certificate of correction reflecting the PTA determination noted above.

Patentee should be aware that in order to preserve the right to review in the United States District Court for the District of Columbia of the USPTO patent term adjustment determination, patentee must ensure that he or she also take the steps required under 35 U.S.C. 154(b)(4)(A) in a timely manner. Nothing in the request for recalculation should be construed as providing an alternative time frame for commencing a civil action under 35 U.S.C. 154(b)(4)(A).

Any questions concerning this decision should be directed to the Office of Patent Legal Administration at 571-272-7702.

UNITED STATES PATENT AND TRADEMARK OFFICE

UNITED STATES DEPARTMENT OF COMMERCE
United States Patent and Trademark Office
Address: COMMISSIONER FOR PATENTS
P.O. Box 1450
Alexandria, Virginia 22313-1450
www.uspto.gov

APPLICATION NO.	FILING DATE	FIRST NAMED INVENTOR	ATTORNEY DOCKET NO.	CONFIRMATION NO.
12/052,932	03/21/2008	Daniel J. Bowman	D-260 (DRI-0059)	3308

23413 7590 02/25/2010
CANTOR COLBURN, LLP
20 Church Street
22nd Floor
Hartford, CT 06103

EXAMINER
SULLIVAN, DEBRA M

ART UNIT	PAPER NUMBER
3725	

NOTIFICATION DATE	DELIVERY MODE
02/25/2010	ELECTRONIC

Please find below and/or attached an Office communication concerning this application or proceeding.

The time period for reply, if any, is set in the attached communication.

Notice of the Office communication was sent electronically on above-indicated "Notification Date" to the following e-mail address(es):

usptopatentmail@cantorcolburn.com

UNITED STATES PATENT AND TRADEMARK OFFICE

Commissioner for Patents
United States Patent and Trademark Office
P.O. Box 1450
Alexandria, VA 22313-1450
www.uspto.gov

CANTOR COLBURN, LLP
20 Church Street
22nd Floor
Hartford CT 06103

In re Application of	:	
BOWMAN, DANIEL J. et al	:	DECISION ON PETITION
Application No. 12/052932	:	TO MAKE SPECIAL UNDER
Filed: 03/21/2008	:	THE GREEN TECHNOLOGY
Attorney Docket No. D-260 (DRI-0059)	:	PILOT PROGRAM
Title: APPARATUS AND METHOD FOR FORMING WIRE LOOPS FOR A DYNAMOELECTRIC MACHINE		

This is a decision on the petition under 37 CFR 1.102, filed February 12, 2010, to make the above-identified application special under the pilot program for applications pertaining to Green Technologies as set forth 74 Federal Register Notice 64666 (December 8, 2009).

The petition is **DISMISSED**.

If reconsideration of this decision is desired, a petition for reconsideration must be filed within ONE (1) MONTH OR THIRTY (30) DAYS from the mail date of this decision, whichever is longer. No extension of this time limit can be granted under 37 CFR 1.136(a) or (b). The petition for reconsideration should include an exhaustive attempt to provide the lacking item(s) noted below, since, after a decision on the petition for reconsideration, no further reconsideration or review of the matter will be undertaken by the Director.

A grantable petition to make an application special under 37 CFR 1.102 and the pilot program as set forth in 74 FR 64666 must be directed to a nonprovisional application filed under 35 USC 111(a) or be a national stage entry under 35 USC 371, exclusive of any reissue applications and be filed prior to the date of the notice, December 8, 2009.

In order to qualify for special status, the following requirements must be met. 1) The application must be classified in one of the eligible US classifications listed in section VI of the notice. 2) The application must have no more than 3 independent claims and no more than 20 total claims. 3) The application must not contain any multiple dependent claims. 4) The petition must state the basis for seeking special status, i.e., the claimed invention either: A) materially enhances the quality of the environment or B) materially contributes to: i) the discovery or development of renewable energy resources, ii) the more efficient utilization and conservation of energy resources, or iii) greenhouse gas emission reduction. 5) If the disclosure is not clear on its face that the claimed invention materially contributes under category (A) or (B), the petition must be accompanied by a statement by the applicant, assignee, or an attorney/agent registered to practice

before the Office explaining how the materiality standard is met. 6) A statement that applicant will agree to make an election without traverse in a telephonic interview if a restriction requirement is made by the examiner. 7) The petition to make special must be filed electronically. 8) The petition must be filed at least one day prior to the date that a first Office Action appears in the Patent Application Information Retrieval (PAIR) system. 9) The petition must be accompanied by a request for early publication in compliance with 37 CFR 1.219 and include the publication fee as set forth in 37 CFR 1.18(d).

The requirement for a fee for consideration of the petition to make special for applications pertaining to Green Technologies has been waived. The petition lacks item(s) #1 and #5.

In regard to item 1, petitioner should note that this application has been classified in an area (USPC 140/092.100) that is not one of the eligible US classifications listed in section VI of the notice. Therefore, this application is not eligible for the Pilot Program. The classification limitations are purposefully made to be narrow for the Pilot Program; however, these may be expanded based upon the success of the Pilot Program. Petitioner may file a preliminary amendment that would cause this application to be classified elsewhere. However, while petitioner may suggest a classification (see, e.g., MPEP 708.02(a)(VII)(C)), the application will be assigned to the most appropriate classification based upon current U.S. classification guidelines. Furthermore, a petition for the Pilot Program should not be filed until and unless all of the requirements set forth in the Notice are met; i.e., a petition should not be filed for an application that is currently classified outside the eligible classifications set forth in the Notice.

In regard to item 5, petitioner should note that the instant petition includes a statement identifying the basis for the special status (i.e., whether the instant invention (1) materially enhances the quality of the environment or materially contributes to (2) development of renewable energy resources or energy conservation, or (3) greenhouse gas reduction) as required by sections II and III of the notice. However, as stated in the notice, applicant must also provide a statement pertaining to the materiality standard if the application disclosure is not clear on its face as to the materiality of the basis for the special status of the invention. This petition lacks such a statement and it is not agreed that the application on its face meets that materiality standard.

Any reconsideration of this decision should be submitted through the USPTO electronic filing system, EFS-Web, and selecting the document description of "Petition for Green Tech Pilot" on the EFS-Web screen.

Telephone inquiries concerning this decision should be directed to Timothy S. Thorpe at 571-272-0417. The application is being forwarded to the Technology Center Art Unit 3725 for action in its regular turn.

/Timothy S. Thorpe/

Timothy S. Thorpe
Supervisory Patent Examiner
Technology Center 3700

UNITED STATES PATENT AND TRADEMARK OFFICE

UNITED STATES DEPARTMENT OF COMMERCE
United States Patent and Trademark Office
Address: COMMISSIONER FOR PATENTS
P.O. Box 1450
Alexandria, Virginia 22313-1450
www.uspto.gov

APPLICATION NO.	FILING DATE	FIRST NAMED INVENTOR	ATTORNEY DOCKET NO.	CONFIRMATION NO.
12/052,932	03/21/2008	Daniel J. Bowman	D-260 (DRI0059US)	3308

23413 7590 06/29/2010
CANTOR COLBURN, LLP
20 Church Street
22nd Floor
Hartford, CT 06103

EXAMINER
KATCOFF, MATTHEW GORDON

ART UNIT	PAPER NUMBER
3725	

NOTIFICATION DATE	DELIVERY MODE
06/29/2010	ELECTRONIC

Please find below and/or attached an Office communication concerning this application or proceeding.

The time period for reply, if any, is set in the attached communication.

Notice of the Office communication was sent electronically on above-indicated "Notification Date" to the following e-mail address(es):

usptopatentmail@cantorcolburn.com

UNITED STATES PATENT AND TRADEMARK OFFICE

Commissioner for Patents
United States Patent and Trademark Office
P.O. Box 1450
Alexandria, VA 22313-1450
www.uspto.gov

CANTOR COLBURN, LLP
20 Church Street
22nd Floor
Hartford CT 06103

In re Application of	:	
BOWMAN, DANIEL J. et al	:	DECISION ON PETITION
Application No. 12/052932	:	TO MAKE SPECIAL UNDER
Filed: March 21, 2008	:	THE GREEN TECHNOLOGY
Attorney Docket No. D-260 (DRI0059US)	:	PILOT PROGRAM

This is a decision on the renewed petition under 37 CFR 1.102, filed June 11, 2010, to make the above-identified application special under the pilot program for applications pertaining to Green Technologies as set forth in 74 Federal Register Notice 64666 (December 8, 2009) and amended by 75 Federal Register Notice 28554 (May 21, 2010).

The petition is **DENIED**.

A grantable petition to make an application special under 37 CFR 1.102 and the pilot program as set forth in 74 FR 64666 must be directed to a nonprovisional application filed under 35 USC 111(a) or be a national stage entry under 35 USC 371, exclusive of any reissue applications and be filed prior to the date of the notice, December 8, 2009.

In order to qualify for special status, the following requirements must be met. 1) The application must have no more than 3 independent claims and no more than 20 total claims. 2) The application must not contain any multiple dependent claims. 3) The petition must state the basis for seeking special status, i.e., the claimed invention either: A) materially enhances the quality of the environment or B) materially contributes to: i) the discovery or development of renewable energy resources, ii) the more efficient utilization and conservation of energy resources, or iii) greenhouse gas emission reduction. 4) If the disclosure is not clear on its face that the claimed invention materially contributes under category (A) or (B), the petition must be accompanied by a statement by the applicant, assignee, or an attorney/agent registered to practice before the Office explaining how the materiality standard is met. 5) A statement that applicant will agree to make an election without traverse in a telephonic interview if a restriction requirement is made by the examiner. 6) The petition to make special must be filed electronically. 7) The petition must be filed at least one day prior to the date that a first Office Action appears in the Patent Application Information Retrieval (PAIR) system. 8) The petition must be accompanied by a request for early publication in compliance with 37 CFR 1.219 and include the publication fee as set forth in 37 CFR 1.18(d).

The requirement for a fee for consideration of the petition to make special for applications pertaining to Green Technologies has been waived.

The petition and/or invention do not meet the requirements of 4. In regard to item 4, petitioner should note that the instant petition includes a statement identifying the basis for the special status (i.e., whether the instant invention (1) materially enhances the quality of the environment or materially contributes to (2) development of renewable energy resources or energy conservation, or (3) greenhouse gas reduction) as required by sections II and III of the notice. However, as stated in the notice, applicant must also provide a statement pertaining to the materiality standard if the application disclosure is not clear on its face as to the materiality of the basis for the special status of the invention. This petition lacks such a statement and it is not agreed that the application on its face meets that materiality standard. In the renewed petition, the applicant stated that the invention relates to stator winding for an electrical machine. The improvements in stator winding increase the operational efficiency of the electric machine. Therefore, the invention materially contributes to the more efficient production of energy by the electric machine. The applicant's argument merely claims more efficient generation and utilization of electrical energy saves our natural resources, but increasing operational efficiency should be the goal of every modification of a machine. The invention as defined by the claims does not necessarily materially enhance the quality of the environment or materially contribute to (2) development of renewable energy resources or energy conservation, or (3) greenhouse gas reduction.

Since reconsideration for the earlier decision on the petition has been filed, no further reconsideration or review of the matter will be undertaken by the Director. The application is being forwarded to the Technology Center Art Unit 3744 for action in its regular turn.

Telephone inquiries concerning this decision should be directed to Henry C. Yuen at 571-272-4856.

The application is being forwarded to the Technology Center Art Unit 3725 for action in its regular turn.

/Henry C. Yuen/

Henry C. Yuen
Quality Assurance Specialist
Technology Center 3700

UNITED STATES PATENT AND TRADEMARK OFFICE

Commissioner for Patents
United States Patent and Trademark Office
P.O. Box 1450
Alexandria, VA 22313-1450
www.uspto.gov

COPY MAILED

SEP 04 2009

OFFICE OF PETITIONS

FOLEY & LARDNER LLP
975 PAGE MILL ROAD
PALO ALTO CA 94304

In re Application of	:	
Gless et al.	:	DECISION ON PETITION
Application No. 12/052,966	:	TO WITHDRAW
Filed: March 21, 2008	:	FROM RECORD
Attorney Docket No. 074019-1351	:	

This is a decision on the Request to Withdraw as attorney or agent of record under 37 C.F.R. § 1.36(b) filed July 14, 2009, which is being treated as a request to withdraw from employment in a proceeding before the Office under 37 C.F.R. § 10.40.

The request is **DISMISSED**.

A review of the file record indicates that Foley & Lardner, LLP does not have power of attorney in this patent application. Accordingly, the request to withdraw under 37 C.F.R. § 1.36(b) is not applicable. Additionally, the Power of Attorney from Assignee submitted June 9, 2008 did not include a Statement under 37 CFR 3.73(b) and was therefore erroneously accepted on June 18, 2008. Since no proper Statement under 37 CFR § 3.73(b) was submitted the request was improper. Currently, there is no Power of Attorney in the above-identified application. Petitioner is designated only as the Correspondence Address according to the Application Data Sheet filed March 21, 2008.

Accordingly, all future communications from the Office will be directed solely to the above current address of record until proper instructions have been received.

Currently, there is no outstanding Office action that requires a reply.

Telephone inquires concerning this decision should be directed to the undersigned at 571-272-7751.

Joan Olszewski
Petitions Examiner
Office of Petitions

UNITED STATES PATENT AND TRADEMARK OFFICE

Commissioner for Patents
United States Patent and Trademark Office
P.O. Box 1450
Alexandria, VA 22313-1450
www.uspto.gov

MEDTRONIC VASCULAR, INC.
IP LEGAL DEPARTMENT
3576 UNOCAL PLACE
SANTA ROSA CA 95403

COPY MAILED
JAN 09 2009

In re Application of	:	
Brian Glynn	:	
Application No. 12/052989	:	DECISION
Filing or 371(c) Date: 05/01/2008	:	ON PETITION
Attorney Docket Number: P29971	:	

This is a decision on the "Petition Under 37 CFR §1.182", filed May 1, 2008, requesting the application be accorded as the filing date, the date that drawing Figures 4A, 4B and 4C, described in the specification and filed with the present petition, are filed.

The petition is **granted**.

Background

Application papers in the above-identified application were deposited on March 21, 2008. The Office of Patent Application Processing (OPAP) mailed a Notice of Omitted Item(s) in a Nonprovisional Application (hereinafter "Notice"), stating that the application had been accorded a filing; however, Figure 4C described in the specification appeared to have been omitted from the application.

The Notice of Omitted Items

The mailing of a "Notice of Omitted Item(s)" will permit the applicant to:

(A) promptly establish prior receipt in the USPTO of the page(s) at issue. An applicant asserting that the page(s) was in fact received by the USPTO with the application papers must, within 2 months from the date of the "Notice of Omitted Item(s)," file a petition under 37 CFR 1.53(e) with the petition fee set forth in 37 CFR 1.17(f), along with evidence of such deposit (37 CFR 1.181(f)). The petition fee will be refunded if it is determined that the page(s) was in fact received by the USPTO with the application papers deposited on filing. The 2-month period is not extendable under 37 CFR 1.136;

(B) promptly submit the omitted page(s) in a nonprovisional application and accept the date of such submission as the application filing date. An applicant desiring to submit the omitted page(s) in a nonprovisional application and accept the date of such submission as the application filing date must, within 2 months from the date of the "Notice of Omitted Item(s)," file any omitted page(s) with an oath or declaration in compliance with 37 CFR 1.63 and 37 CFR 1.64 referring to such page(s) and a petition under 37 CFR 1.182 with the petition fee set forth in 37 CFR 1.17(f), requesting the later filing date (37 CFR 1.181(f)). The 2-month period is not extendable under 37 CFR 1.136; or

(C) accept the application as deposited in the USPTO.

The present petition

Applicant has chosen option B, and files the present petition and includes an oath or declaration in compliance with 37 CFR 1.63 and 37 CFR 1.64 referring to the drawing Figure(s). Accordingly, the petition is granted.

The application will be returned to the Office of Patent Application Processing for further processing with a filing date of May 1, 2008, the date the omitted drawing was filed.

Telephone inquiries concerning this matter should be directed to the undersigned at (571) 272-3232.

/Derek L. Woods/
Derek L. Woods
Attorney
Office of Petitions

SPE RESPONSE FOR CERTIFICATE OF CORRECTION

Paper No.: _____

DATE : 12-24-09

TO SPE OF : ART UNIT ~~2862~~ 2858

SUBJECT : Request for Certificate of Correction for Appl. No.: 12/053004 Patent No.: 7592801

Please respond to this request for a certificate of correction within 7 days.

FOR IFW FILES:

Please review the requested changes/corrections as shown in the **COCIN** document(s) in the IFW application image. No new matter should be introduced, nor should the scope or meaning of the claims be changed.

Please complete the response (see below) and forward the completed response to scanning using document code **COCX**.

FOR PAPER FILES:

Please review the requested changes/corrections as shown in the attached certificate of correction. Please complete this form (see below) and forward it with the file to:

Certificates of Correction Branch (CofC)
Randolph Square – 9D10-A
Palm Location 7580

Angela Green 703-756-1541
Certificates of Correction Branch
703-756-1814

Thank You For Your Assistance

The request for issuing the above-identified correction(s) is hereby:
Note your decision on the appropriate box.

- ☒ **Approved** — **All** changes apply.
- ☐ **Approved in Part** — Specify below which changes **do not** apply.
- ☐ **Denied** — State the reasons for denial below.

Comments: _____

/Patrick Assouad /
SPE

Art Unit 2858

UNITED STATES PATENT AND TRADEMARK OFFICE

UNITED STATES DEPARTMENT OF COMMERCE
United States Patent and Trademark Office
Address: COMMISSIONER FOR PATENTS
P.O. Box 1450
Alexandria, Virginia 22313-1450
www.uspto.gov

APPLICATION NO.	FILING DATE	FIRST NAMED INVENTOR	ATTORNEY DOCKET NO.	CONFIRMATION NO.
12/053,085	03/21/2008	Gerard Papierok	CMAR-00201-UUS	3574

7590 11/03/2008

MATTHIAS SCHOLL
14781 MEMORIAL DRIVE
SUITE 1319
HOUSTON, TX 77079

EXAMINER
GANGLE, BRIAN J

ART UNIT	PAPER NUMBER
1645	

NOTIFICATION DATE	DELIVERY MODE
11/03/2008	ELECTRONIC

DECISION GRANTING PETITION UNDER 37 CFR 1.138(d)

The declaration of express abandonment is recognized

This is in response to the petition under 37 CFR 1.138(d), requesting for a refund of any previously paid search fee and excess claims fee in the above-identified application.

The petition is granted.

The express abandonment is recognized. Any previously paid search fee and excess claims fee are hereby refunded.

Telephone inquiries should be directed to the Office of Data Management at (571) 272-4200.

Nioni Farmer

Patent Publication Branch
Office of Data Management

Adjustment date: 10/31/2008 NFARMER
05/15/2008 INTEFSW 00005514 12053085
02 FC:1111 -510.00 OP
04 FC:1202 -250.00 OP

Refund Ref: 00300629 79
10/31/2008

Credit Card Refund Total: $760.00

VISA....: XXXXXXXXXXXXXX2589

Adjustment date: 10/31/2008 NFARMER
05/23/2008 INTEFSW 00006899 12053085
01 FC:1202 -50.00 OP

Refund Ref: 00300629 80
10/31/2008

Credit Card Refund Total: $50.00

Re Exp..: XXXXXXXXXXXXXX1008

FORM PET651G (Rev. 08/07)

UNITED STATES PATENT AND TRADEMARK OFFICE

Commissioner for Patents
United States Patent and Trademark Office
P.O. Box 1450
Alexandria, VA 22313-1450
www.uspto.gov

LADAS & PARRY
5670 WILSHIRE BOULEVARD
SUITE 2100
LOS ANGELES, CA 90036-5679

MAILED

MAY 10 2010

OFFICE OF PETITIONS

In re Application of
CHUNG JAE LEE
Application No. 12/053,092
Filed: March 21, 2008
Attorney Docket No. **086121-0022**

DECISION ON PETITION
TO WITHDRAW
FROM RECORD

This is a decision on the Request to Withdraw as attorney or agent of record under 37 CFR. § 1.36(b), filed March 4, 2010.

The request is **NOT APPROVED** as moot.

A review of the file record indicates that the power of attorney to attorneys/agents associated with Customer Number 36716 has been revoked by the applicants of the patent application on March 26, 2010. Accordingly, the request to withdraw under 37 CFR § 1.36(b) is moot.

All future communications from the Office will continue to be directed to the below-listed address until otherwise notified by applicant.

Telephone inquires concerning this decision should be directed to the undersigned at 571-272-4584.

/JoAnne Burke/
JoAnne Burke
Petitions Examiner
Office of Petitions

cc: MCDERMOTT WILL & EMERY LLP
600 13TH STREET, N.W.
WASHINGTON DC 20005-3096

UNITED STATES PATENT AND TRADEMARK OFFICE

UNITED STATES DEPARTMENT OF COMMERCE
United States Patent and Trademark Office
Address: COMMISSIONER FOR PATENTS
P.O. Box 1450
Alexandria, Virginia 22313-1450
www.uspto.gov

APPLICATION NO.	FILING DATE	FIRST NAMED INVENTOR	ATTORNEY DOCKET NO.	CONFIRMATION NO.
12/053,098	03/21/2008	Candice L. Coletrane	RPS920070191US2	3591

59369 7590 06/20/2008
CANTOR COLBURN LLP - IBM RESEARCH TRIANGLE PARK
20 Church Street
22nd Floor
Hartford, CT 06103

EXAMINER
CALDWELL, ANDREW T

ART UNIT	PAPER NUMBER
2142	

MAIL DATE	DELIVERY MODE
06/20/2008	PAPER

Please find below and/or attached an Office communication concerning this application or proceeding.

The time period for reply, if any, is set in the attached communication.

UNITED STATES PATENT AND TRADEMARK OFFICE

Commissioner for Patents
United States Patent and Trademark Office
P.O. Box 1450
Alexandria, VA 22313-1450
www.uspto.gov

CANTOR COLBURN LLP - IBM RESEARCH TRIANGLE PARK
20 Church Street
22nd Floor
Hartford CT 06103

In re Application of: Candice L. Coletrane et al. Serial No.: 12/053,098 Filed: March 21, 2008 Docket: RPS920070191US2 Title: APPARATUS FOR POST DELIVERY INSTANT MESSAGE REDIRECTION	DECISION ON PETITION TO MAKE SPECIAL FOR NEW APPLICATION UNDER 37 C.F.R. § 1.102 & M.P.E.P. § 708.02

This is a decision on the petition filed on March 21, 2008 to make the above-identified application special for accelerated examination procedure under 37 C.F.R. § 1.102(d).

The petition to make the application special is **DISMISSED**.

REGULATION AND PRACTICE

A grantable petition to make special under 37 C.F.R. § 1.102(d) and pursuant to the "Change to Practice for Petitions in Patent Applications to Make Special and for Accelerated Examination" published in the Federal Register on June 26, 2006 (71 Fed. Reg. 36323), must satisfy the following conditions:

I. Conditions Regarding the Application:

1. the application must be a non-reissue utility or design application filed under 37 CFR 1.111(a);
2. the application, the petition and the required fees must be filed electronically using the USPTO's electronic filing system (EFS), or EFS-web; if not filed electronically, a statement asserting that EFS and EFS-web were not available during the normal business hours.
3. at the time of filing, the application must be complete under 37 CFR 1.51 and in condition for examination;
4. the application must contain three or fewer independent claims and twenty or fewer total claims and the claims must be directed to a single invention.

II. Conditions Regarding the Petition:

The petition must:

1. be filed with the application;

2. include a statement that applicant agrees not to separately argue the patentability of any dependent claim during any appeal in the application;

3. include a statement that applicant agrees to make an election without traverse in a telephone interview.

4. include a statement that applicant agrees to conduct such an interview when requested by the examiner.

5. include a statement, made based on a good faith belief, that a preexamination search in compliance with the following requirements, was conducted, including an identification of the field of search by United States class and subclass, where applicable, and for database searches, the search logic or chemical structure or sequence used as a query, the name of the file(s) searched and the database service, and the date of the search.

The preexamination search must:

5.1 involve U.S. patents and patent application publications, foreign patent documents, and non-patent literature, unless the applicant can justify with reasonable certainty that no references more pertinent than those already identified are likely to be found in the eliminated sources and includes such a justification with this statement;

5.2. be directed to the claimed invention and encompass all of the features of the claims, giving the claims the broadest reasonable interpretation;

5.3. encompass the disclosed features that may be claimed.

6. must provide in support of the petition an accelerated examination support document. An accelerated examination support document must include:

6.1. an information disclosure statement (IDS) in compliance with 37 CFR 1.98 citing each reference deemed most closely related to the subject matter of each of the claims;

6.2. an identification of all the limitations in the claims that are disclosed by the reference specifying where the limitation is disclosed in the cited reference;

6.3. a detailed explanation of how each of the claims are patentable over the references cited with particularity required by 37 CFR 1.111(b) and (c);

6.4. a concise statement of the utility of the invention as defined in each of the independent claims (unless the application is a design application);

6.5. a showing of where each limitation of the claims finds support under 35 USC 112, first paragraph, in the written description of the specification. If applicable, the showing must also identify: (1) each means- (or step) plus-function claim element that invokes consideration under 35 USC 112, sixth paragraph; and (2) the structure, material, or acts in the specification that corresponds to each means- (or step) plus-function claim element that invokes consideration under 35 USC 112, sixth paragraph; if the application claims the benefit of one or more applications under title 35, United States Code, the showing must also include where each limitation of the claims finds support under 35 USC 112, first paragraph, in each such application in which such supports exists;

6.6. an identification of any cited references that may be disqualified under 35 USC 103(c).

REVIEW OF FACTS

The conditions I.1 – I.4, II.1 – II.4, , II.5.3 , II.6.4 and II.6.6 above are considered to have been met. However, the petition fails to comply with conditions II5.1, II.5.2, II.6.2, II.6.3 and II.6.5 above. Therefore, the petition fails to meet the required conditions to be accorded special status under the accelerated examination procedure.

Regarding the requirement of MPEP § 708.02(a)(I.)(H)[1] and item 5 above, petitioner does not provide the date when the U.S.class and subclass search was performed.

Regarding item 5.1 above, under the U.S. field of search, petitioner has listed several classes and multiple subclasses within these classes as having been searched. It is noted that listing only class/subclasses searched in this manner will be taken as representation by the petitioner that each of the patent documents classified under each class/subclass listed in section 8(A) was reviewed in its entirely for subject matter relevant to the claimed invention. Given the large number of documents covered by all of the classes and subclasses listed in the preexamination search, petitioner is requested to provide clarification as to whether a limited classification search was conducted, and if so, clearly indicate the limitation in the preexamination search statement by using an appropriate annotation after the class and subclass , for example, 455/466 (1954 to date) and 713/153 (text search only – see search logic).

With respect to item II.5.2 above, several claim limitations, some of which have been asserted as patentable features distinguishing the claimed invention from the cited prior art (such as "*before notification* that the recipient is typing", " *before the notification* that the chat window has been closed", "automatically logged off" as recited in claim 1), do not appear to have been included in any of the patent text search and the Non-Patent literature (NPL) search. It is noted that while the search logic did include a few keywords and phrases used in the claim, the search does not appear to include a search for the above concepts as recited in the context of the claimed invention . Petitioner should review all claim limitations, especially those asserted as patentable distinctions from the cited references to ensure that both the patent text search and the NPL search cover these concepts, and update the search and/or provide any clarifications if deemed necessary.

Regarding the requirement of items 6.2 and 6.3 above, the Support Document fails to clearly identify all claim limitations believed to be disclosed in the references, and further fails to provide a detailed explanation of how each of the claims is patentable over the references cited with particularity required by 37 CFR 1.111(b) and (c).
Specifically, 37 CFR § 1.111 (c) states in part "the applicant or patent owner must clearly point out the patentable novelty which he or she thinks the claims present in view of the state of the art disclosed by the references cited". Petitioner's "Statement of Patentability" is not clear and consistent as to how each of the claims is patentable over the references cited. In particular, petitioner asserts in section 9(C) of the Support Document that the Daigle reference does not

[1] MPEP 8th ed. rev 5 August 2006

teach or suggest several limitations recited in claim 1 and that claim 1 is not anticipated by the reference, while in section 9(B) of the support document, petitioner appears to indicate that these limitations, along with every other limitation in claim 1 and are disclosed by Daigle, although these limitations are not mapped to specific disclosure within the Daigle document. Thus petitioner has not clearly pointed out how the language of the claim patentably distinguishes them from the reference, as required by 37 CFR 1.111(b) and (c). Petitioner should review both sections 9(B) and 9(C) of the support document and provide clarifications to ensure compliance with the requirement of items 6.2 and 6.3 above.

Further, with respect to item 6.5 above, while the Support Document includes a showing of support under 35 USC 112 first paragraph in the instant specification, no showing of support is provided for each claim limitation in Application Serial No. 11/941705, from which the instant application claims benefit. Correction is required.

DECISION

For the above-stated reasons, the petition is **dismissed**. The application will therefore be taken up by the examiner for action in its regular turn.

Petitioner is given a single opportunity to perfect the petition. Any request for reconsideration of this decision must be submitted within 1 (one) month or 30 (thirty) days, whichever is longer, (no extension of time under 37 CFR 1.136(a)) from the date of this decision in order to be considered timely. Any request for reconsideration must address the deficiencies indicated above.

Petitioner is reminded that, upon granting of the special status of the application on request for reconsideration, the application will be processed expeditiously. However, due to the dismissal of the instant petition, examination may not be completed within twelve months of the filing date of the application.

Any inquiry regarding this decision should be directed to the undersigned at (571) 272-3719. If attempts to reach the undersigned are unsuccessful, Mano Padmanabhan, Quality Assurance Specialist, Technology Center 2100 can be reached at (571)272-4210.

/Kakali Chaki/

Kakali Chaki, Quality Assurance Specialist
Technology Center 2100

UNITED STATES PATENT AND TRADEMARK OFFICE

UNITED STATES DEPARTMENT OF COMMERCE
United States Patent and Trademark Office
Address: COMMISSIONER FOR PATENTS
P.O. Box 1450
Alexandria, Virginia 22313-1450
www.uspto.gov

APPLICATION NO.	FILING DATE	FIRST NAMED INVENTOR	ATTORNEY DOCKET NO.	CONFIRMATION NO.
12/053,098	03/21/2008	Candice L. Coletrane	RPS920070191US2	3591

59369 7590 10/02/2008
CANTOR COLBURN LLP - IBM RESEARCH TRIANGLE PARK
20 Church Street
22nd Floor
Hartford, CT 06103

EXAMINER
CALDWELL, ANDREW T

ART UNIT	PAPER NUMBER
2142	

NOTIFICATION DATE	DELIVERY MODE
10/02/2008	ELECTRONIC

Please find below and/or attached an Office communication concerning this application or proceeding.

The time period for reply, if any, is set in the attached communication.

Notice of the Office communication was sent electronically on above-indicated "Notification Date" to the following e-mail address(es):

usptopatentmail@cantorcolburn.com

UNITED STATES PATENT AND TRADEMARK OFFICE

Commissioner for Patents
United States Patent and Trademark Office
P.O. Box 1450
Alexandria, VA 22313-1450
www.uspto.gov

CANTOR COLBURN LLP - IBM RESEARCH TRIANGLE PARK
20 Church Street
22nd Floor
Hartford CT 06103

In re Application of: Candice L. Coletrane et al. Serial No.: 12/053098 Filed: March 21, 2008 Docket: RPS920070191US2 Title: APPARATUS FOR POST DELIVERY INSTANT MESSAGE REDIRECTION	DECISION ON PETITION TO MAKE SPECIAL FOR NEW APPLICATION UNDER 37 C.F.R. § 1.102 & M.P.E.P. § 708.02

This is a decision on the renewed petition filed on March 21, 2008 to make the above identified application special for accelerated examination procedure under 37 C.F.R. § 1.102(d) and the supplemental documents filed July 17, 2008. The original petition, submitted on March 16, 2008 was dismissed in the decision mailed on June 20, 2008.

The petition to make the application special is GRANTED.

The application is eligible for accelerated examination and the petition complies with the conditions for granting the application special status pursuant to the "Change to Practice for Petitions in Patent Applications to Make Special and for Accelerated Examination" published June 26, 2006, in the Federal Register. (71 Fed. Reg. 36323).

The prosecution of the instant application will be conducted expeditiously according to the following guidelines.

1. The application will be docketed to an examiner and taken up for action within two weeks of the date of this decision.

2. Restriction Practice:
   If the examiner determines that the claims are not directed to a single invention, a telephone request to elect one single invention will be made pursuant to MPEP 812.01. As a prerequisite to the grant of this petition, the applicant has agreed to make an oral election, by telephone, without traverse. If the applicant refuses to make an election without traverse, or the examiner cannot reach the applicant after a reasonable effort, the examiner will treat the first claimed invention (invention defined by claim 1) as having being constructively elected without traverse for examination.

3. Office action:
   If it is determined that, after appropriate consultation, there is a potential rejection or any other issue to be addressed, the examiner will telephone the applicant and arrange an interview to discuss and resolve the issue. An Office action, other than a Notice of Allowance and Fee(s) Due (Notice of Allowance), will not be issued unless either: 1) an interview was conducted but did not result in agreed to action that places the application in condition for allowance, or, 2) a determination is made that an interview would be unlikely to result in the application being placed in condition for allowance, and 3) an internal conference has been held to review any rejection of any claim.

4. Time for Reply:
   An Office action other than a Notice of Allowance or a final Office action will set a shortened statutory period of one month or thirty days, whichever is longer, for reply with no extension of time available under 37 CFR 1.136(a). Failure to timely file a reply within this non-extendible period for reply will result in the abandonment of the application.

5. Reply by Applicant:
   A timely reply to an Office action other than the Notice of Allowance must be submitted electronically via EFS or EFS-web and limited to addressing the rejections, objections and requirement made. Any amendment that attempts to: 1) add claims which would result in more than three pending independent claims or more than twenty pending total claims; 2) present claims not encompassed by the pre-examination search or an updated accelerated examination support document; or 3) present claims that are directed a non-elected invention or an invention other than that previously claimed and examined in the application, will be treated as not fully responsive and will not be entered.

   For any amendment to the claims (including any new claim) that is not encompassed by the accelerated examination support document, applicant must provide an updated accelerated examination support document that encompasses the amended or new claims at the time of filing of the amendment.

   To proceed expeditiously with the examination, it is recommended that a reply with amendments made to any claim or with any new claim being added be accompanied by an updated accelerated examination support document or a statement explaining how the amended or new claim is supported by the original accelerated examination support document.

6. Information Disclosure Statement (IDS):
   Any IDS filed during prosecution must be submitted electronically via EFS or EFS-web, accompanied by an updated accelerated examination support document, and be in compliance with 37 CFR 1.97 and 1.98.

7. Post-Allowance Processing:

To expedite processing of the allowed application into a patent, the applicant must: 1) pay the required fees within one month of the date of the Notice of Allowance, and 2) not file any post allowance papers not required by the Office. In no event may the issue fee be paid and accepted later than three months from the date of the Notice of Allowance.

8. After-Final and Appeal Procedures:
   To expedite prosecution, after receiving the final Office action, applicant must: 1) promptly file a notice of appeal, an appeal brief and appeal fees; and 2) not request a pre-appeal brief conference.

   Any amendment, affidavit or other evidence filed after final Office action must comply with applicable rules and the requirements outlined in numbered paragraphs 5 and 6 above.

   On appeal, the application will proceed according to normal appeal procedures. After appeal, the application will again be treated special.

9. Proceedings Outside the Normal Examination Process:
   If the application becomes involved in a proceeding that is outside the normal examination process (e.g., a secrecy order, national security review, interference proceeding, petitions under 37 CFR 1.181, 182 or 183), the application will be treated special before and after such proceeding.

10. Final Disposition:
    The twelve month goal of this accelerated examination procedure ends with a final disposition. The mailing of a final Office action, a Notice of Allowance, the filing of a Notice of Appeal, or the filing of a Request for Continued Examination (RCE) is the final disposition.

If, during prosecution, a paper is not filed electronically using EFS-web, a reply is filed but is not fully responsive, the application is involved in an appeal, or a proceeding outside normal examination process, the application will still be examined expeditiously, however, the final disposition may occur more than twelve months from the filing of the application.

Any inquiry regarding this decision should be directed to the undersigned at (571) 272-3719.
If attempts to reach the undersigned by telephone are unsuccessful, Mano Padmanabhan, Quality Assurance Specialist, can be reached at (571) 272-4210.

/Kakali Chaki/

Kakali Chaki, Quality Assurance Specialist
Technology Center 2100

UNITED STATES PATENT AND TRADEMARK OFFICE

Commissioner for Patents
United States Patent and Trademark Office
P.O. Box 1450
Alexandria, VA 22313-1450
www.uspto.gov

GORDON & JACOBSON
SUITE 407
60 LONG RIDGE ROAD
STAMFORD, CT 06902

COPY MAILED

AUG 14 2009

OFFICE OF PETITIONS

In re Application of	:	
Sundaram Ravikumar	:	
Application No. 12/053,117	:	DECISION ON PETITION
Filed: March 21, 2008	:	TO WITHDRAW
Attorney Docket No. RAV-030	:	FROM RECORD
	:	

This is a decision on the Request to Withdraw as attorney or agent of record under 37 C.F.R. § 1.36(b), filed June 25, 2009.

The request is **APPROVED**.

The request was signed by David P. Gordon on behalf of the practitioners of record associated with Customer Number 36822.

Applicant is reminded that there is no attorney of record at this time.

All future correspondence will be directed to inventor Sundaram Ravikumar at the address indicated below.

Telephone inquiries concerning this decision should be directed to Irvin Dingle at (571) 272-3210.

Irvin Dingle
Petitions Examiner
Office of Petitions

cc: Sundaram Ravikumar
265 Hardscrabble Road
Briarcliff Manor, NY 10510

UNITED STATES PATENT AND TRADEMARK OFFICE

Commissioner for Patents
United States Patent and Trademark Office
P.O. Box 1450
Alexandria, VA 22313-1450
www.uspto.gov

ROTHWELL, FIGG, ERNST & MANBECK, PC
1425 K STREET, N.W.
SUITE 800
WASHINGTON, DC 20005

COPY MAILED

JAN 05 2009

OFFICE OF PETITIONS

In re Application of	:	
Liang-tseng Fan, et al.	:	
Application No. 12/053,126	:	DECISION ON PETITION
Filed: March 21, 2008	:	TO MAKE SPECIAL UNDER
Attorney Docket No. 3406-0102	:	37 CFR 1.102(c)(1)
	:	

This is a decision on the petition under 37 CFR 1.102(c)(1), filed October 17, 2008, to make the above-identified application special based on applicant's age as set forth in M.P.E.P. § 708.02, Section IV.

The petition is **GRANTED**.

A grantable petition to make an application special under 37 CFR 1.102(c)(1) and MPEP § 708.02, Section IV: Applicant's Age must be accompanied by evidence showing that at least one of the applicants is 65 years of age, or more, such as a birth certificate or a statement by applicant. No fee is required

The instant petition includes a statement from applicant's attorney that he is in possession of evidence that applicant Liang-tseng Fan's age. Accordingly, the above-identified application has been accorded "special" status.

Telephone inquiries concerning this decision should be directed to undersigned at 571-272-1642.

All other inquiries concerning either the examination or status of the application should be directed to the Technology Center.

The application is being forwarded to the Technology Center Art Unit 1797 for action on the merits commensurate with this decision.

/AMW/
April M. Wise
Petitions Examiner
Office of Petitions

UNITED STATES PATENT AND TRADEMARK OFFICE

UNITED STATES DEPARTMENT OF COMMERCE
United States Patent and Trademark Office
Address: COMMISSIONER FOR PATENTS
P.O. Box 1450
Alexandria, Virginia 22313-1450
www.uspto.gov

APPLICATION NO.	FILING DATE	FIRST NAMED INVENTOR	ATTORNEY DOCKET NO.	CONFIRMATION NO.
12/053,194	03/21/2008	Hirofumi Terasawa	136444	3767

7590 06/29/2009
OLIFF & BERRIDGE, PLC
P.O. BOX 320850
ALEXANDRIA, VA 22320-4850

EXAMINER
CERULLO, JEREMY S

ART UNIT	PAPER NUMBER
2111	

MAIL DATE	DELIVERY MODE
06/29/2009	PAPER

DECISION GRANTING PETITION UNDER 37 CFR 1.138(d)

The declaration of express abandonment is recognized

This is in response to the petition under 37 CFR 1.138(d), requesting for a refund of any previously paid search fee and excess claims fee in the above-identified application.

The petition is granted.

The express abandonment is recognized. Any previously paid search fee and excess claims fee are hereby refunded.

Telephone inquiries should be directed to the Office of Data Management at (571) 272-4200.

Nirmi Farmer

Patent Publication Branch
Office of Data Management

Adjustment date: 06/29/2009 NFARMER
03/24/2008 INTEFSW 00000880 150461 12053194
02 FC:1111 510.00 CR
04 FC:1201 210.00 CR

FORM PET651G (Rev. 08/07)

UNITED STATES PATENT AND TRADEMARK OFFICE

Commissioner for Patents
United States Patent and Trademark Office
P.O. Box 1450
Alexandria, VA 22313-1450
www.uspto.gov

MARTINE PENILLA & GENCARELLA LLP
710 LAKEWAY DRIVE
SUITE 200
SUNNYVALE CA 94085

COPY MAILED

OCT 31 2008

OFFICE OF PETITIONS

In re Application of	:	
Kalman, et al.	:	
Application No. 12/053,228	:	DECISION ACCORDING STATUS
Filed: March 21, 2008	:	UNDER 37 CFR 1.47(a)
Attorney Docket No. ADAPP293	:	

This is in response to the petition under 37 CFR 1.47(a), filed October 16, 2008.

The petition under 37 CFR 1.47(a) is **GRANTED**.

On petition, petitioner has established that inventors Sandars and Reyero have refused to sign the application papers. Specifically, petitioner has attested that a copy of the application papers was mailed to Sandars and Reyero on May 21, 2008, but as of the mail date of this decision, no executed declaration has been received. In support thereof, petitioner has included a copy of transmittal letters, transmitting the application papers to the two inventors.

The above-identified application and papers have been reviewed and found to be in compliance with 37 CFR 1.47(a). Accordingly, the above-identified application is hereby accorded Rule 1.47(a) status. As provided in 37 CFR 1.47(c), this Office will forward notice of this application's filing to the non-signing inventor at the last known address provided on the declaration. Notice of the filing of this application will also be published in the Official Gazette.

Receipt of $130 for the petition fee is acknowledged. However, the fee for a petition under 37 CFR 1.47 is $200. Accordingly, the balance of $70 has been charged to Deposit Account No. 50-0805, as authorized.

The matter is being forwarded to the Office of Patent Application Processing for pre-examination processing.

Telephone inquiries related to this decision may be directed to the undersigned at (571)272-3207.

Cliff Congo
Petitions Attorney
Office of Petitions

UNITED STATES PATENT AND TRADEMARK OFFICE

Commissioner for Patents
United States Patent and Trademark Office
P.O. Box 1450
Alexandria, VA 22313-1450
www.uspto.gov

MIKE REYERO
2812 COUNTRY GLEN LN
KELLER TX 76248

COPY MAILED

OCT 31 2008

OFFICE OF PETITIONS

In re Application of
Kalman, et al.
Application No. 12/053,228
Filed: March 21, 2008
Title: Controlled Discovery of San-Attached Scsi Devices and Access Control via Login Authentication

LETTER

Dear Mr. Reyero:

You are named as a joint inventor in the above-identified United States patent application filed under the provisions of 35 USC 116 (United States Code) and 37 CFR 1.47(a), Rules of Practice in Patent Cases. Should a patent be granted on the application you will be designated therein as a joint inventor.

As a joint inventor, you are entitled to inspect any paper in the file wrapper of the application, order copies of all or any part thereof (at a prepaid cost per 37 CFR 1.19) or make your position of record in the application. Alternatively, you may arrange to do any of the preceding through a registered patent attorney or agent presenting written authorization from you. If you care to join the application, agent of record would presumably assist you. Joining in the application would entail the filing of an appropriate oath or declaration by you pursuant to 37 CFR 1.63.

Telephone inquiries regarding this communication should be directed to Petitions Attorney Cliff Congo at (571)272-3207. Requests for information regarding your application should be directed to the File Information Unit at (703) 308-2733. Information regarding how to pay for and order a copy of the application, or a specific paper in the application, should be directed to the Certification Division at (703) 308-9726 or 1-800-972-6382 (outside the Washington D.C. area).

Cliff Congo
Petitions Attorney
Office of Petitions

UNITED STATES PATENT AND TRADEMARK OFFICE

Commissioner for Patents
United States Patent and Trademark Office
P.O. Box 1450
Alexandria, VA 22313-1450
www.uspto.gov

KEN SANDARS
39 SPRING ST
SANDRINGHAM VICTORIA 3191
AUSTRALIA

COPY MAILED

OCT 3 1 2008

OFFICE OF PETITIONS

In re Application of
Kalman, et al.
Application No. 12/053,228
Filed: March 21, 2008
Title: Controlled Discovery of San-Attached Scsi Devices and Access Control via Login Authentication

LETTER

Dear Mr. Sandars:

You are named as a joint inventor in the above-identified United States patent application filed under the provisions of 35 USC 116 (United States Code) and 37 CFR 1.47(a), Rules of Practice in Patent Cases. Should a patent be granted on the application you will be designated therein as a joint inventor.

As a joint inventor, you are entitled to inspect any paper in the file wrapper of the application, order copies of all or any part thereof (at a prepaid cost per 37 CFR 1.19) or make your position of record in the application. Alternatively, you may arrange to do any of the preceding through a registered patent attorney or agent presenting written authorization from you. If you care to join the application, agent of record would presumably assist you. Joining in the application would entail the filing of an appropriate oath or declaration by you pursuant to 37 CFR 1.63.

Telephone inquiries regarding this communication should be directed to Petitions Attorney Cliff Congo at (571)272-3207. Requests for information regarding your application should be directed to the File Information Unit at (703) 308-2733. Information regarding how to pay for and order a copy of the application, or a specific paper in the application, should be directed to the Certification Division at (703) 308-9726 or 1-800-972-6382 (outside the Washington D.C. area).

Cliff Congo
Petitions Attorney
Office of Petitions

UNITED STATES PATENT AND TRADEMARK OFFICE

Commissioner for Patents
United States Patent and Trademark Office
P.O. Box 1450
Alexandria, VA 22313-1450
www.uspto.gov

DLA PIPER US LLP
2000 UNIVERSITY AVENUE
E. PALO ALTO CA 94303-2248

COPY MAILED

APR 22 2008

OFFICE OF PETITIONS

In re Application of	:	
SHIFRIN, Lazar A.	:	
Application No. 12/053,235	:	DECISION ON PETITION
Filed: March 21, 2008	:	TO MAKE SPECIAL UNDER
Attorney Docket No. **365188-991030**	:	37 CFR 1.102(c)(1)
	:	

This is a decision on the petition under 37 CFR 1.102(c)(1), filed April 4, 2008, to make the above-identified application special based on applicant's age as set forth in M.P.E.P. § 708.02, Section IV.

The petition is **GRANTED.**

A grantable petition to make an application special under 37 CFR 1.102(c)(1) and MPEP § 708.02, Section IV: Applicant's Age must be accompanied by evidence showing that at least one of the applicants is 65 years of age, or more, such as a birth certificate or a statement by applicant. No fee is required

The instant petition includes the statement of inventor Lazar A. Shifrin, attesting to his age. Accordingly, the above-identified application will be accorded "special" status.

Inquiries concerning either the examination or status of the application should be directed to the Office of Patent Application Processing at 571-272-4000.

Telephone inquiries concerning this decision should be directed to the undersigned at 571-272-7253.

The application is being forwarded to the office of Initial Patent Examination for processing. This application will be accorded "special" status when pre-examination processing is done.

Monica A. Graves
Petitions Examiner
Office of Petitions

UNITED STATES PATENT AND TRADEMARK OFFICE

Commissioner for Patents
United States Patent and Trademark Office
P.O. Box 1450
Alexandria, VA 22313-1450
www.uspto.gov

HOLLAND & KNIGHT LLP
10 ST. JAMES AVENUE
11TH FLOOR
BOSTON MA 02116-3889

MAILED

MAR 05 2009

OFFICE OF PETITIONS

In re Application of Christopher B. Morgan et al Application No. 12/053,340 Filed: March 21, 2008 Attorney Docket No. 110235.00011	: : : : :	DECISION ON PETITION

This is a decision on the petition under the unintentional provisions of 37 CFR 1.137(b), filed February 4, 2009, to revive the above-identified application.

The petition is **GRANTED**.

The petition satisfies the conditions for revival pursuant to the provisions of 37 CFR 1.137(b) in that (1) the reply in the form of replacement drawings, and an executed declaration/surcharge fee; (2) the petition fee; and (3) the required statement of unintentional delay have been received. Accordingly, the reply to the Notice mailed April 7, 2008, is accepted as having been unintentionally delayed.

Telephone inquiries concerning this decision should be directed to the undersigned at (571) 272-3208.

This application is being referred to the Office of Patent Application Processing for pre-examination processing.

Karen Creasy

Karen Creasy
Petitions Examiner
Office of Petitions

UNITED STATES PATENT AND TRADEMARK OFFICE

Commissioner for Patents
United States Patent and Trademark Office
P.O. Box 1450
Alexandria, VA 22313-1450
www.uspto.gov

NOV 17 2009

SUGHRUE MION, PLLC
2100 PENNSYLVANIA AVENUE, N.W.
SUITE 800
WASHINGTON DC 20037

In re application of Toshinari Suzuki Application No. 12/053,347 Filed: March 21, 2008 For: CONTROL APPARATUS FOR HYBRID VEHICLE DRIVE SYSTEM	: : : : : :	DECISION ON REQUEST TO PARTICIPATE IN PATENT PROSECUTION HIGHWAY PROGRAM AND PETITION TO MAKE SPECIAL UNDER 37 CFR 1.102(d)

This is a decision on the request to participate in the Patent Prosecution Highway (PPH) program and the petition under 37 CFR 1.102(d), filed November 16, 2009, to make the above-identified application special.

The request and petition are **GRANTED**.

A grantable request to participate in the PPH pilot program and petition to make special require:

(1) The U.S. application must validly claim priority under 35 U.S.C. 119(a) to one or more applications filed in the JPO;

(2) Applicant must submit a copy of the allowable/patentable claim(s) from the JPO application(s) along with an English translation thereof and a statement that the English translation is accurate;

(3) All the claims in the U.S. application must sufficiently correspond or be amended to sufficiently correspond to the allowable/patentable claim(s) in the JPO application(s);

(4) Examination of the U.S. application has not begun;

(5) Applicant must submit a copy of the Office action from the JPO application just prior to the "Decision to Grant a Patent" (e.g., the latest "Notification of Reasons for Refusal") from each of the JPO application(s) containing the allowable/patentable claims that are the basis for the request along with an English translation thereof and a statement that the English translation is accurate;

(6) Applicant must submit an IDS listing the documents cited by the JPO examiner in the JPO Office action along with copies of documents except U.S. patents or U.S. patent application publications; and

(7) The required petition fee under 37 CFR 1.17(h).

The request to participate in the PPH program complies with the above requirements. Therefore, the above-identified application has been accorded "special" status.

Telephone inquires concerning this decision should be directed to Teri P. Luu at 571-272-7045. All other inquiries concerning the examination or status of the application should be directed to the Patent Application Information Retrieval (PAIR) system.

The application is being forwarded to the examiner for action on the merits commensurate with this decision.

/Teri P. Luu/

Teri P. Luu
Quality Assurance Specialist
Technology Center 3600

tpl: 11/17/09

UNITED STATES PATENT AND TRADEMARK OFFICE

Commissioner for Patents
United States Patent and Trademark Office
P.O. Box 1450
Alexandria, VA 22313-1450
www.uspto.gov

WH POWERS
1020 49TH AVENUE EAST
BRADENTON FL 34203

COPY MAILED

OCT 20 2008

OFFICE OF PETITIONS

In re Application of	:	
W.H. Powers	:	
Application No. 12/053,348	:	ON PETITION
Filed: March 21, 2008	:	
Title: Retaining Device for Roll Dispensing Applications	:	

This is a decision on the petition under 37 CFR 1.102(c)(1), filed March 21, 2008, to make the above-identified application special based on applicant's age as set forth in M.P.E.P. § 708.02, Section IV.

The petition is **GRANTED**.

A grantable petition to make an application special under 37 CFR 1.102(c)(1) and MPEP § 708.02, Section IV: Applicant's Age must be accompanied by evidence showing that at least one of the applicants is 65 years of age, or more, such as a birth certificate or a statement by applicant. No fee is required.

The instant petition includes a statement by the applicant that he is 65 years of age, and is also accompanied with a copy of applicant's Kansas birth certificate, Florida driver's license and Judgement Changing Name. Accordingly, the above-identified application has been accorded "special" status.

Telephone inquiries concerning this decision should be directed to Joan Olszewski at 571-272-7751. All other inquiries concerning either the examination or status of the application should be directed to the Technology Center.

This matter is being referred to the Technology Center Art Unit 3654 for action on the merits commensurate with this decision.

/Liana Walsh/
Liana Walsh
Petitions Examiner
Office of Petitions

UNITED STATES PATENT AND TRADEMARK OFFICE

Commissioner for Patents
United States Patent and Trademark Office
P.O. Box 1450
Alexandria, VA 22313-1450
www.uspto.gov

BIRCH STEWART KOLASCH & BIRCH
PO BOX 747
FALLS CHURCH VA 22040-0747

5/13/09

In re Application of KAWAKITA, KOJI et al Application No. 12/053,349 Filed: Mar. 21, 2008 Attorney Docket No. 0649-1714PUS1 For: SYSTEM OPERABLE TO CONTROL EXHAUST GAS EMISSION OF ENGINE	DECISION ON REQUEST TO PARTICIPATE IN PATENT PROSECUTION HIGHWAY PROGRAM AND PETITION 37 CFR 1.102(d)

This is a decision on the request to participate in the Patent Prosecution Highway (PPH) program and the petition under 37 CFR 1.102(d), filed May 6, 2009 to make the above-identified application special.

The request and petition are **dismissed**.

A grantable request to participate in the PPH pilot program and petition to make special require:

(1) The U.S. application must validly claim priority under 35 U.S.C. 119(a) to one or more applications filed in the JPO;
(2) Applicant must submit a copy of the allowable/patentable claim(s) from the JPO application(s) along with an English translation thereof and a statement that the English translation is accurate;
(3) All the claims in the U.S. application must sufficiently correspond or be amended to sufficiently correspond to the allowable/patentable claim(s) in the JPO application(s);
(4) Examination of the U.S. application has not begun;
(5) Applicant must submit a copy of all the office actions from each of the JPO application(s) containing the allowable/patentable claim(s) along with an English translation thereof and a statement that the English translation is accurate;
(6) Applicant must submit an IDS listing the documents cited by the JPO examiner in the JPO office action along with copies of documents except U.S. patents or U.S. patent application publications; and
(7) The required petition fee under 37 CFR 1.17(h).

The request to participate in the PPH program and petition met all conditions except Item #6 above. The request to participate in the PPH pilot program and petition fail to include:

A copy of the Japanese Utility Model Applications No. JP A-2006 118433 is needed. The patent document was cited in the corresponding JPO Office action of Nov. 21, 2008.

The applicant is encouraged to cite and submit all relevant prior art references, if any, to facilitate examination in this application.

Applicant is given a time period of **ONE MONTH or THIRTY DAYS**, whichever is longer, from the mailing date of this decision to correct the deficiencies. **NO EXTENSION OF TIME UNDER 37 CFR 1.136 IS PERMITTED.** If the deficiencies are not corrected with the time period given, the application will await action in its regular turn.

Response must be filed via EFS-Web. Telephone inquiries concerning this decision should be directed to Henry C. Yuen, at 571-272-4856.

Henry C. Yuen
Special Programs Examiner
Technology Center 3700
Tel: 571-272-4856

UNITED STATES PATENT AND TRADEMARK OFFICE

Commissioner for Patents
United States Patent and Trademark Office
P.O. Box 1450
Alexandria, VA 22313-1450
www.uspto.gov

BIRCH STEWART KOLASCH & BIRCH
PO BOX 747
FALLS CHURCH VA 22040-0747

6/18/09

In re Application of	:
KAWAKITA, KOJI et al	: DECISION ON REQUEST TO
Application No. 12/053,349	: PARTICIPATE IN PATENT
Filed: April 21, 2009	: PROSECUTION HIGHWAY
Attorney Docket No. 4978-0113PUS1	: PROGRAM AND PETITION
For: SYSTEM OPERABLE TO CONTROL	: TO MAKE SPECIAL UNDER
EXHAUST GAS EMISSION OF ENGINE	: 37 CFR 1.102(d)

This is a decision on the renewed request to participate in the Patent Prosecution Highway (PPH) program under 37 CFR 1.102(d), filed June 12, 2009 to make the above-identified application special.

The request is **GRANTED**.

A grantable request to participate in the PPH program and petition to make special require:

(1) The U.S. application must validly claim priority under 35 U.S.C. 119(a) to one or more applications filed in the JPO;
(2) Applicant must submit a copy of the allowable/patentable claim(s) from the JPO application(s) along with an English translation thereof and a statement that the English translation is accurate;
(3) All the claims in the U.S. application must sufficiently correspond or be amended to sufficiently correspond to the allowable/patentable claim(s) in the JPO application(s);
(4) Examination of the U.S. application has not begun;
(5) Applicant must submit a copy of all the office actions from each of the JPO application(s) containing the allowable/patentable claim(s) along with an English translation thereof and a statement that the English translation is accurate;
(6) Applicant must submit an IDS listing the documents cited by the JPO examiner in the JPO office action along with copies of documents except U.S. patents or U.S. patent application publications; and
(7) The required petition fee under 37 CFR 1.17(h) of $130.00 has been paid.

The request to participate in the PPH program and petition comply with the above requirements. Receipt of the requested document is acknowledged and has been entered. Accordingly, the above-identified application has been accorded "special" status.

Telephone inquiries concerning this decision should be directed to Henry C. Yuen, at 571-272-4856.

All other inquiries concerning the examination or status of the application should be directed to the Supervisory Patent Examiner Thomas Denion, Art Unit 3748, at 571-272-4859.

The application is being forwarded to the examiner for action on the merits commensurate with this decision.

Henry C. Yuen, Special Programs Examiner
Technology Center 3700 – Mechanical Engineering,
Manufacturing and Products
571-272-4856

UNITED STATES PATENT AND TRADEMARK OFFICE

Commissioner for Patents
United States Patent and Trademark Office
P.O. Box 1450
Alexandria, VA 22313-1450
www.uspto.gov

RIGEL PHARMACEUTICALS INC.
C/O FOLEY & LARDNER LLP
975 PAGE MILL ROAD
PALO ALTO, CA 94304

MAILED

JUN 17 2009

OFFICE OF PETITIONS

In re Application of	:	
Atuegbu et al.	:	DECISION ON PETITION
Application No. 12/053,382	:	TO WITHDRAW
Filed: March 21, 2008	:	FROM RECORD
Attorney Docket No.	:	
RIGLP005/P.0215.04.US.UT		

This is a decision on the Request to Withdraw as attorney or agent of record under 37 C.F.R. § 1.36(b), filed May 14, 2009.

The request is **NOT APPROVED** because it is moot.

A review of the file record indicates that on June 4, 2009 the power of attorney to Foley & Lardner, LLP was revoked by the assignee of the patent application. Accordingly, the request to withdraw under 37 C.F.R. § 1.36(b) is moot.

All future communications from the Office will be directed to the below-listed address until otherwise notified by applicant.

Telephone inquires concerning this decision should be directed to the undersigned at 571-272-7751. All other inquires concerning either the examination or status of the application should be directed to the Technology Center.

Joan Olszewski
Petitions Examiner
Office of Petitions

cc: Weaver Austin Villeneuve & Sampson LLP
P.O. Box 70250
Oakland CA 94612-0250

UNITED STATES PATENT AND TRADEMARK OFFICE

Commissioner for Patents
United States Patent and Trademark Office
P.O. Box 1450
Alexandria, VA 22313-1450
www.uspto.gov
DIW Dec-08

BARNES & THORNBURG LLP
11 SOUTH MERIDIAN
INDIANAPOLIS IN 46204

COPY MAILED
DEC 08 2008

In re Application of	:
Badylak, Tullius, Huber,	: DECISION REFUSING STATUS
Lindberg, and Spievack	: UNDER 37 CFR 1.47(a)
Application Number: 12/053383	:
Filing Date: 03/21/2008	:
Attorney Docket Number: 3220-	:
205104	:

This is in response to the petition under 37 CFR 1.47(a) filed on November 7, 2008.

The petition is **DISMISSED**.

Rule 47 applicant is given TWO MONTHS from the mailing date of this decision to reply, correcting the below-noted deficiencies. Any reply should be entitled "Request for Reconsideration of Petition Under 37 CFR 1.47(a)," and should only address the deficiencies noted below, except that the reply may include an oath or declaration executed by the non-signing inventor. **FAILURE TO RESPOND WILL RESULT IN ABANDONMENT OF THE APPLICATION.** Extensions of time may be obtained in accordance with 37 CFR 1.136(a).

The above-identified application was filed on March 21, 2008, without an executed oath or declaration. Accordingly, on April 7, 2008, the Office of Patent Application Processing (OPAP) mailed a Notice to File Missing Parts of Nonprovisional Application, requiring an executed oath or declaration and a

surcharge for its late filing. A two (2) month period for reply was set.

In response, on November 7, 2008, a five (5) month extension of time was filed, along with the extension of time fee, the surcharge, and the present petition under 37 CFR 1.47(a) and authorization to charge petition fee. A declaration naming Stephen F. Badylak, Robert S. Tullius, Nathan L. Huber, Kristina Lindberg, and Alan R. Spievack was also filed, signed by joint inventor Huber on behalf of himself and the non-signing joint inventors.

Petitioners counsel, Rebecca L. Ball, asserts that she sent a copy of the application papers to the attorney believed to represent the non-signing inventors by Certified Mail on October 22, 2008, but that the non-signing inventors have failed to sign and return the declaration. Petitioners have enclosed a copy of the cover letter transmitting the application papers to the non-signing inventors' attorney.

A grantable petition under 37 CFR 1.47(a) requires:

(1) proof that the non-signing inventor, or legal representative thereof, cannot be reached or located, notwithstanding diligent effort, or refuses to sign the oath or declaration after having been presented with the application papers (specification, claims and drawings);

(2) an acceptable oath or declaration in compliance with 35 U.S.C. §§ 115 and 116;

(3) the petition fee;

(4) a surcharge of $130 or $65 (small entity) if the petition and/or declaration is not filed at the time of filing the application, and

(5) a statement of the last known address of the non-signing inventors, or legal representative(s) thereof.

The petition lacks item (2).

In regards to item (2), above, it is noted that the declaration states in the block for non-signing inventor Alan R. Speivack "(Legal Representative of Alan R. Spievack on Behalf of Alan R. Speivack"). As such, a question is raised as to whether inventor Speivack is incapacitated or deceased.

37 CFR 1.42 states that in case of the death of the inventor, the legal representative (executor, administrator, etc.) of the deceased inventor may make the necessary oath or declaration, and apply for and obtain the patent.

37 CFR 1.43 states that in case an inventor is insane or otherwise legally incapacitated, the legal representative (guardian, conservator, etc.) of such inventor may make the necessary oath or declaration, and apply for and obtain the patent.

Petitioner must thereof explain whether joint inventor Spievack is incapacitated or deceased. 37 CFR 1.47 is not considered an alternative to 37 CFR 1.42 or 1.43 since the language "cannot be found or reached after diligent effort" has no reasonable application to a deceased (or incapacitated) inventor.[1] 37 CFR 1.42 states that when the inventor is dead, the legal representative may make the necessary oath or declaration. 37 CFR 1.47 will apply when a known legal representative cannot be found or refuses to sign the declaration. In such cases, the last known address of the legal representative must be established before the grant of a patent.[2]

To establish 37 CFR 1.47 status, petitioner must submit a 37 CFR 1.47 petition on behalf of the legal representative of the deceased (or incapacitated) inventor.

---

[1] *In re Application Papers Filed September 10, 1954*, 108 USPQ 340 (Comm'r Pat. 1955).
[2] See 37 CFR 1.42.

A new oath or declaration in compliance with 37 CFR 1.63 and 1.67, signed by the inventor to whom the error or deficiency relates is required.[3] As all of the signing inventors must sign on behalf of a non-signing inventor under 37 CFR 1.47(a) a new declaration, containing the omitted residence and signed by all of the signing inventors on behalf of themselves and the non-signing inventor, must be filed with a renewed petition.[4]

Petitioners are reminded that any oath or declaration filed with a renewed petition must identify both the application number and filing date of the application.[5]

A new oath or declaration, containing the residence, mailing address, and citizenship of all of the inventors, signed by all of the signing inventors on behalf of themselves and the non-signing inventor in compliance with 37 CFR 1.63 and 1.67 is required.

The mailing address and residence for non-signing inventor Kristina Lindberg has not been provided on the declaration. It is noted that this information was provided in an Application Data Sheet present on filing filed pursuant to 37 CFR 1.76, as permitted by 37 CFR 1.63(c). Nevertheless, the mailing address and residence city and state or city and foreign country should be provided in any oath or declaration provided with a renewed petition.

Further correspondence with respect to this matter should be addressed as follows:

By mail: Mail Stop Petition
Commissioner for Patents
P.O. Box 1450
Alexandria, VA 22313-1450

By FAX: (571) 273-8300
Attn: Office of Petitions

By hand: Customer Service Window
Mail Stop Petition
Randolph Building
401 Dulany Street
Alexandria, VA 22314

---

[3] 37 CFR 1.67(a)(2).

[4] See MPEP 409.03(A).

[5] 35 U.S.C. § 115, MPEP 605.01.

Telephone inquiries related to this decision should be directed to the undersigned at 571-272-3231.

Douglas I. Wood
Senior Petitions Attorney
Office of Petitions

UNITED STATES PATENT AND TRADEMARK OFFICE

Commissioner for Patents
United States Patent and Trademark Office
P.O. Box 1450
Alexandria, VA 22313-1450
www.uspto.gov
DIW Apr-09

BARNES & THORNBURG LLP
11 SOUTH MERIDIAN
INDIANAPOLIS IN 46204

MAILED

APR 22 2009

OFFICE OF PETITIONS

In re Application of Badylak, Tullius, Huber, Lindberg, and Spievack Application Number: 12/053383 Filing Date: 03/21/2008 Attorney Docket Number: 3220-205104	DECISION REFUSING STATUS UNDER 37 CFR 1.47(a)

This is in response to the renewed petition under 37 CFR 1.47(a) filed on March 13, 2009.

The petition is again **DISMISSED**.

Rule 47 applicant is given TWO MONTHS from the mailing date of this decision to reply, correcting the below-noted deficiencies. Any reply should be entitled "Request for Reconsideration of Petition Under 37 CFR 1.47(a)," and should only address the deficiencies noted below, except that the reply may include an oath or declaration executed by the non-signing inventor (or, if deceased, his or her legal representative). **FAILURE TO RESPOND WILL RESULT IN ABANDONMENT OF THE APPLICATION.** Extensions of time may be obtained in accordance with 37 CFR 1.136(a).

The above-identified application was filed on March 21, 2008, without an executed oath or declaration. Accordingly, on April 7, 2008, the Office of Patent Application Processing (OPAP) mailed a Notice to File Missing Parts of Nonprovisional Application, requiring an executed oath or declaration and a surcharge for its late filing. A two (2) month period for reply was set.

In response, on November 7, 2008, a five (5) month extension of time was filed, along with the extension of time fee, the surcharge, and a petition under 37 CFR 1.47(a) and authorization to charge petition fee. A declaration naming Stephen F. Badylak, Robert S. Tullius, Nathan L. Huber, Kristina Lindberg, and Alan R. Spievack was also filed, signed by joint inventor Huber on behalf of himself and the non-signing joint inventors. On December 8, 2008, the petition was dismissed.

On March 13, 2009 (certificate of mailing date March 9, 2009), the subject renewed petition was filed, accompanied by a one (1) month extension of time.

Petitioners assert that joint inventors Lindberg and Spievack are deceased, and that joint inventors Badylak and Tullius, as well as the legal representative of deceased inventor Spievack, refuse to sign the declaration. A declaration signed by Huber and on behalf of deceased inventor Lindberg, ostensibly by her daughter, has been provided.

37 CFR 1.42 states, in part:

In the case of the death of the inventor, the legal representative (executor, administrator, etc.) of the deceased inventor may make the necessary oath or declaration, and apply for and obtain the patent.

37 CFR 1.47(a) requires:

(1) proof that the non-signing inventor, or legal representative thereof, cannot be reached or refuses to sign the oath or declaration after having been presented with the application papers (specification, claims and drawings);
(2) an acceptable oath or declaration in compliance with 35 U.S.C. §§ 115 and 116;
(3) the petition fee; and
(4) a statement of the last known address of the non-signing inventor, or legal representative thereof.

The petition lacks items (1) and (2).

With regards to item (1), it is noted that 37 CFR 1.42 states that in case of the death of the inventor, the legal representative (executor, administrator, etc.) of the deceased inventor may make the necessary oath or declaration, and apply for and obtain the patent.

In the subject case, however, the legal representative of deceased inventor Spievack has not been identified by name. Rather, the letter transmitting the application papers has simply been addressed to "Legal Representative of Alan R. Spievack." If the legal representative is not identified by name, applicants cannot show that the legal representative refused to sign the oath or declaration or could not be reached.[1]

Any renewed petition must identify the legal representatives of all deceased inventors by name. Petitioners may show proof that a copy of the application was sent or given to the non-signing inventors or, if deceased, their legal representatives, for review by providing a copy of the cover letter transmitting the application papers (specification, including claims, drawings, if any, and the declaration) to the non-signing inventor (or legal representative) or details given in an affidavit or declaration of facts by a person having first-hand knowledge of the details.

Likewise, before a *bona fide* refusal to sign the declaration can be alleged, petitioners **must** show that a copy of the application was sent or given to the legal representative. If the legal representative refuses in writing, petitioners must submit a copy of that written refusal with any renewed petition. If the refusal was made orally to a person, then that person must provide details of the refusal in an affidavit or declaration of fact.

In regards to item (2), likewise, the legal representatives for deceased inventors Lindberg and Spievack have not been identified by name in the declaration. While a signature has been provided, identifying a person as the daughter of deceased inventor Lindberg, that person's name has not been provided in accordance with 37 CFR 1.42 and 1.63. It is also unclear whether the

---

[1] While a person has signed the certified mail return receipt addressed to the legal representative of deceased inventor Spievack, the identity of this person is unknown.

residence (city and state or city and foreign country), mailing address, and citizenship provided in the signature space for the legal representative of joint inventor Lindberg are those of the legal representative, or the last known address, residence, and citizenship of the now-deceased inventor. The residence, mailing address, and citizenship of the legal representative must be provided.

To assist petitioners in properly preparing the declaration on behalf of deceased inventors, a copy of forms PTO/SB/02LR (accompanied by PTO/SB/01 and PTO/SB/02A) are enclosed for petitioner's reference.

Likewise, the declaration does not identify the name, residence, mailing address, or citizenship of the legal representative of deceased inventor Spievack. A new declaration, signed by all of the signing inventors legal representative(s) of deceased inventors on behalf of themselves and the non-signing inventors and legal representatives, must be provided with any renewed petition.

Further correspondence with respect to this matter should be addressed as follows:

By mail: Mail Stop Petition
Commissioner for Patents
P.O. Box 1450
Alexandria, VA 22313-1450

By FAX: (571) 273-8300
Attn: Office of Petitions

By hand: Customer Service Window
Mail Stop Petition
Randolph Building
401 Dulany Street
Alexandria, VA 22314

Telephone inquiries related to this decision should be directed to the undersigned at 571-272-3231.

Douglas I. Wood
Senior Petitions Attorney
Office of Petitions

Encl:

PTO/SB/01
PTO/SB/02A
PTO/SB/02LR

UNITED STATES PATENT AND TRADEMARK OFFICE

Commissioner for Patents
United States Patent and Trademark Office
P.O. Box 1450
Alexandria, VA 22313-1450
www.uspto.gov
DIW Nov-09

BARNES & THORNBURG LLP
11 SOUTH MERIDIAN
INDIANAPOLIS IN 46204

MAILED

NOV 19 2009

OFFICE OF PETITIONS

In re Application of Badylak, Tullius, Huber, Lindberg, and Spievack Application Number: 12/053383 Filing Date: 03/21/2008 Attorney Docket Number: 3220-205104	DECISION ACCORDING STATUS UNDER 37 CFR 1.47(a)

This is in response to the twice renewed petition under 37 CFR 1.47(a) filed on October 22, 2009.

The petition is **GRANTED**.

The above-identified application was filed on March 21, 2008, without an executed oath or declaration. Accordingly, on April 7, 2008, the Office of Patent Application Processing (OPAP) mailed a Notice to File Missing Parts of Nonprovisional Application, requiring an executed oath or declaration and a surcharge for its late filing. A two (2) month period for reply was set.

Petitioners have shown that the non-signing inventors, Stephen F. Badylak and Robert S. Tullius, as well as the legal

representative to deceased inventor Alan R. Spievack,[1] have refused to join in the filing of the above-identified application after having been sent a copy of the application, via their counsel. Specifically, the petitioners have established that a copy of the application was sent to counsel for each of the non-signing inventors, as well as the non-signing legal representative. The non-signing inventors, however, have failed to return the executed declaration naming them as joint inventors along with Nathan L. Huber and deceased inventor Kristina Lindberg.

The above-identified application and papers have been reviewed and found in compliance with 37 CFR 1.47(a). This application is hereby accorded Rule 1.47(a) status.

As provided in Rule 1.47(c), this Office will forward notice of this application's filing to the non-signing inventors and legal representative at the address given in the Declaration. Notice of the filing of this application will also be published in the Official Gazette.

It is noted that a $130.00 fee was submitted with the petition filed November 7, 2008. The fee required for a petition under 37 CFR 1.47(a), however, is $200.00. The balance will be charged to counsel's deposit account. It is further noted that a $130.00 fee was submitted with both renewed petitions filed on March 13, 2009 and October 22, 2009. No additional petition fee was due with the renewed petitions. The duplicate fees will be refunded to counsel's deposit account.

The application will be referred to Technology Center Art Unit 1636 for examination in due course.

Telephone inquiries related to this decision should be directed to the undersigned at 571-272-3231.

DWood

Douglas I. Wood
Senior Petitions Attorney
Office of Petitions

---

[1] A declaration signed by the legal representative of deceased inventor Lindberg was filed on November 9, 2009.

UNITED STATES PATENT AND TRADEMARK OFFICE

COMMISSIONER FOR PATENTS
UNITED STATES PATENT AND TRADEMARK OFFICE
P.O. BOX 1450
ALEXANDRIA, VA 22313-1450
www.uspto.gov
DIW Nov-09

Stephen F. Badylak
4713 Bayard St
Pittsburgh PA 15213

MAILED

NOV 18 2009

OFFICE OF PETITIONS

In re Application of
Badylak et al.
Application No. 12/053,383
Filed: March 21, 2008
For: TISSUE REGENERATIVE COMPOSITION

Dear Mr. Badylak:

You are named as a joint inventor in the above identified United States patent application, filed under the provisions of 35 U.S.C. 116 (United States Code), and 37 CFR 1.47(a), Rules of Practice in Patent Cases. Should a patent be granted on the application you will be designated therein as a joint inventor.

As a named inventor you are entitled to inspect any paper in the file wrapper of the application, order copies of all or any part thereof (at a prepaid cost per 37 CFR 1.19) or make your position of record in the application. Alternatively, you may arrange to do any of the preceding through a registered patent attorney or agent presenting written authorization from you. If you care to join the application, counsel of record (see below) would presumably assist you. Joining in the application would entail the filing of an appropriate oath or declaration by you pursuant to 37 CFR 1.63.

Telephone inquiries regarding this communication should be directed to the undersigned at 571/272-3231. Requests for information regarding your application should be directed to the File Information Unit at 571-272-3150. Information regarding how to pay for and order a copy of the application, or a specific paper in the application, should be directed to Certification Division at 571-272-3150 or 1-800-972-6382 (outside the Washington D.C. area).

D Wood

Douglas I. Wood
Senior Petitions Attorney
Office of Petitions

BARNES & THORNBURG LLP
11 SOUTH MERIDIAN
INDIANAPOLIS IN 46204

UNITED STATES PATENT AND TRADEMARK OFFICE

COMMISSIONER FOR PATENTS
UNITED STATES PATENT AND TRADEMARK OFFICE
P.O. BOX 1450
ALEXANDRIA, VA 22313-1450
www.uspto.gov
DIW Nov-09

Robert S. Tullius
11209 South State Road 43
Brookston IN 47923

MAILED

NOV 18 2009

OFFICE OF PETITIONS

In re Application of
Badylak et al.
Application No. 12/053,383
Filed: March 21, 2008
For: TISSUE REGENERATIVE COMPOSITION

Dear Mr. Tullius:

You are named as a joint inventor in the above identified United States patent application, filed under the provisions of 35 U.S.C. 116 (United States Code), and 37 CFR 1.47(a), Rules of Practice in Patent Cases. Should a patent be granted on the application you will be designated therein as a joint inventor.

As a named inventor you are entitled to inspect any paper in the file wrapper of the application, order copies of all or any part thereof (at a prepaid cost per 37 CFR 1.19) or make your position of record in the application. Alternatively, you may arrange to do any of the preceding through a registered patent attorney or agent presenting written authorization from you. If you care to join the application, counsel of record (see below) would presumably assist you. Joining in the application would entail the filing of an appropriate oath or declaration by you pursuant to 37 CFR 1.63.

Telephone inquiries regarding this communication should be directed to the undersigned at 571/272-3231. Requests for information regarding your application should be directed to the File Information Unit at 571-272-3150. Information regarding how to pay for and order a copy of the application, or a specific paper in the application, should be directed to Certification Division at 571-272-3150 or 1-800-972-6382 (outside the Washington D.C. area).

D Wood

Douglas I. Wood
Senior Petitions Attorney
Office of Petitions

BARNES & THORNBURG LLP
11 SOUTH MERIDIAN
INDIANAPOLIS IN 46204

UNITED STATES PATENT AND TRADEMARK OFFICE

COMMISSIONER FOR PATENTS
UNITED STATES PATENT AND TRADEMARK OFFICE
P.O. BOX 1450
ALEXANDRIA, VA 22313-1450
www.uspto.gov
DIW Nov-09

Joanne Watson
Legal Representative of Alan R. Spievack
6 Old Dee Road
Cambridge MA 02138

MAILED

NOV 18 2009

OFFICE OF PETITIONS

In re Application of
Badylak et al.
Application No. 12/053,383
Filed: March 21, 2008
For: TISSUE REGENERATIVE COMPOSITION

Dear Ms. Watson:

You are named as the legal representative of the deceased joint inventor in the above identified United States patent application, filed under the provisions of 35 U.S.C. 116 (United States Code), and 37 CFR 1.47(a), Rules of Practice in Patent Cases. Should a patent be granted on the application the deceased inventor will be designated therein as a joint inventor.

As the named legal representative you are entitled to inspect any paper in the file wrapper of the application, order copies of all or any part thereof (at a prepaid cost per 37 CFR 1.19) or make your position of record in the application. Alternatively, you may arrange to do any of the preceding through a registered patent attorney or agent presenting written authorization from you. If you care to join the application, counsel of record (see below) would presumably assist you. Joining in the application would entail the filing of an appropriate oath or declaration by you pursuant to 37 CFR 1.63.

Telephone inquiries regarding this communication should be directed to the undersigned at 571/272-3231. Requests for information regarding your application should be directed to the File Information Unit at 571-272-3150. Information regarding how to pay for and order a copy of the application, or a specific paper in the application, should be directed to Certification Division at 571-272-3150 or 1-800-972-6382 (outside the Washington D.C. area).

D Wood

Douglas I. Wood
Senior Petitions Attorney
Office of Petitions

BARNES & THORNBURG LLP
11 SOUTH MERIDIAN
INDIANAPOLIS IN 46204

UNITED STATES PATENT AND TRADEMARK OFFICE

Commissioner for Patents
United States Patent and Trademark Office
P.O. Box 1450
Alexandria, VA 22313-1450
www.uspto.gov

DOSTER GREENE , LLC
#215
2 Wisconsin Circle, Suite 700
Chevy Chase, MD 20815

JUN 10 2008

In re Application of: Eli Arbel et al. Serial No.: 12/053,384 Filed: March 21, 2008 Docket No.: IL920070125US1 Title: DEVICES AND METHODS TO CLUSTER BOOLEAN FUNCTIONS FOR CLOCK GATING	DECISION ON PETITION TO MAKE SPECIAL FOR NEW APPLICATION UNDER 37 C.F.R. § 1.102 & M.P.E.P. § 708.2

This is a decision on the petition filed on March 21, 2008 to make the above-identified application special for accelerated examination procedure under 37 C.F.R. §1.102(d).

The petition to make the application special is GRANTED.

The application is eligible for accelerated examination and the petition complies with the conditions for granting the application special status pursuant to the "Change to Practice for Petitions in Patent Applications to Make Special and for Accelerated Examination" published June 26, 2006, in the Federal Register. (71 Fed. Reg. 36323).

The prosecution of the instant application will be conducted expeditiously according to the following guidelines.

1. The application will be docketed to an examiner and taken up for action within two weeks of the date of this decision.

2. Restriction Practice:
   If the examiner determines that the claims are not directed to a single invention, a telephone request to elect one single invention will be made pursuant to MPEP 812.01. As a prerequisite to the grant of this petition, the applicant has agreed to make an oral election, by telephone, without traverse. If the applicant refuses to make an election without traverse, or the examiner cannot reach the applicant after a reasonable effort, the examiner will treat the first claimed invention (invention defined by claim 1) as having being constructively elected without traverse for examination.

3. Office action:
   If it is determined that, after appropriate consultation, there is a potential rejection or any

other issue to be addressed, the examiner will telephone the applicant and arrange an interview to discuss and resolve the issue. An Office action, other than a Notice of Allowance and Fee(s) Due (Notice of Allowance), will not be issued unless either: 1) an interview was conducted but did not result in agreed to action that places the application in condition for allowance, or, 2) a determination is made that an interview would be unlikely to result in the application being placed in condition for allowance, and 3) an internal conference has been held to review any rejection of any claim.

4. Time for Reply:
An Office action other than a Notice of Allowance or a final Office action will set a shortened statutory period of one month or thirty days, whichever is longer, for reply with no extension of time available under 37 C.F.R. §1.136(a). Failure to timely file a reply within this non-extendible period for reply will result in the abandonment of the application.

5. Reply by Applicant:
A timely reply to an Office action other than the Notice of Allowance must be submitted electronically via EFS or EFS-web and limited to addressing the rejections, objections and requirement made. Any amendment that attempts to: 1) add claims which would result in more than three pending independent claims or more than twenty pending total claims; 2) present claims not encompassed by the pre-examination search or an updated accelerated examination support document; or 3) present claims that are directed a non-elected invention or an invention other than that previously claimed and examined in the application, will be treated as not fully responsive and will not be entered.

For any amendment to the claims (including any new claim) that is not encompassed by the accelerated examination support document, applicant must provide an updated accelerated examination support document that encompasses the amended or new claims at the time of filing of the amendment.

To proceed expeditiously with the examination, it is recommended that a reply with amendments made to any claim or with any new claim being added be accompanied by an updated accelerated examination support document or a statement explaining how the amended or new claim is supported by the original accelerated examination support document.

6. Information Disclosure Statement (IDS):
Any IDS filed during prosecution must be submitted electronically via EFS or EFS-web, accompanied by an updated accelerated examination support document, and be in compliance with 37 C.F.R. §1.97 and §1.98. mpliance with 37 C.F.R. §1.97 and §1.98.

7. Post-Allowance Processing:
To expedite processing of the allowed application into a patent, the applicant must: 1) pay the required fees within one month of the date of the Notice of Allowance, and 2) not

file any post allowance papers not required by the Office. In no event may the issue fee be paid and accepted later than three months from the date of the Notice of Allowance.

8. After-Final and Appeal Procedures:
   To expedite prosecution, after receiving the final Office action, applicant must: 1) promptly file a notice of appeal, an appeal brief and appeal fees; and 2) not request a pre-appeal brief conference.

   Any amendment, affidavit or other evidence filed after final Office action must comply with applicable rules and the requirements outlined in numbered paragraphs 5 and 6 above.

   On appeal, the application will proceed according to normal appeal procedures. After appeal, the application will again be treated special.

9. Proceedings Outside the Normal Examination Process:
   If the application becomes involved in a proceeding that is outside the normal examination process (e.g., a secrecy order, national security review, interference proceeding, petitions under 37 C.F.R. §1.181, §1.182 or §1.183), the application will be treated special before and after such proceeding.

10. Final Disposition:
    The twelve-month goal of this accelerated examination procedure ends with a final disposition. The mailing of a final Office action, a Notice of Allowance, the filing of a Notice of Appeal, or the filing of a Request for Continued Examination (RCE) is the final disposition.

If, during prosecution, a paper is not filed electronically using EFS-web, a reply is filed but is not fully responsive, the application is involved in an appeal, or a proceeding outside normal examination process, the application will still be examined expeditiously, however, the final disposition may occur more than twelve months from the filing of the application.

Any inquiry regarding this decision should be directed to the undersigned at (571) 272-1638.

Edward Westin

Edward Westin, Quality Assurance Specialist
Technology Center 2800
Semiconductors, Electrical and Optical
Systems and Components

UNITED STATES PATENT AND TRADEMARK OFFICE

Commissioner for Patents
United States Patent and Trademark Office
P.O. Box 1450
Alexandria, VA 22313-1450
www.uspto.gov

COURTNEY STANIFORD & GREGORY LLP
10001 N. De Anza Blvd., Suite 300
Cupertino CA 95014

COPY MAILED

DEC 14 2009

OFFICE OF PETITIONS

In re Application of	:	
Pierre Fazan	:	
Application No. 12/053,398	:	NOTICE
Filed: March 21, 2008	:	
Attorney Docket No. ISIL.P002	:	

This is a notice regarding your request for acceptance of a fee deficiency submission under 37 CFR 1.28.

The Office no longer investigates or rejects original or reissue applications under 37 CFR 1.56. **1098 Off. Gaz. Pat. Office 502 (January 3, 1989)**. Therefore, nothing in this Notice is intended to imply that an investigation was done.

Your fee deficiency submission under 37 CFR 1.28 is hereby **ACCEPTED**.

This application is no longer entitled to small entity status. Accordingly, all future fees paid in this application must be paid at the large entity rate.

Inquiries related to this communication should be directed to Terri Johnson (571) 272-2991.

Chris Bottorff
Petitions Examiner
Office of Petitions

UNITED STATES PATENT AND TRADEMARK OFFICE

Commissioner for Patents
United States Patent and Trademark Office
P.O. Box 1450
Alexandria, VA 22313-1450
www.uspto.gov

RIGEL PHARMACEUTICALS INC.
C/O FOLEY & LARDNER LLP
975 PAGE MILL ROAD
PALO ALTO CA 94304

MAILED

JUN 26 2009

OFFICE OF PETITIONS

In re Application of	:	
Li et al.	:	DECISION ON PETITION
Application No. 12/053,438	:	TO WITHDRAW
Filed: March 21, 2008	:	FROM RECORD
Attorney Docket No. 064311-1502	:	

This is a decision on the Request to Withdraw as attorney or agent of record under 37 C.F.R. § 1.36(b) filed May 14, 2009, which is being treated as a request to withdraw from employment in a proceeding before the Office under 37 C.F.R. § 10.40.

The request is **DISMISSED.**

A review of the file record indicates that Gerald F. Swiss and those attorneys associated with Customer No. 69588 do not have power of attorney in this patent application. Accordingly, the request to withdraw under 37 C.F.R. § 1.36(b) is not applicable.

The request to change the correspondence address of record is not accepted in view of Mr. Swiss not having power of attorney. See MPEP §§ 601.03 and 405. Therefore, all future communications from the Office will continue to be directed solely to the address of record.

Currently, there is an outstanding Office action mailed June 22, 2009 that requires a reply.

Telephone inquires concerning this decision should be directed to Petitions Examiner Joan Olszewski at 571-272-7751.

/Liana Walsh/
Liana Walsh
Petitions Examiner
Office of Petitions

UNITED STATES PATENT AND TRADEMARK OFFICE

UNITED STATES DEPARTMENT OF COMMERCE
United States Patent and Trademark Office
Address: COMMISSIONER FOR PATENTS
P.O. Box 1450
Alexandria, Virginia 22313-1450
www.uspto.gov

APPLICATION NO.	FILING DATE	FIRST NAMED INVENTOR	ATTORNEY DOCKET NO.	CONFIRMATION NO.
12/053,461	03/21/2008	Shiro KATAOKA	081356-0293	4304

22428 7590 05/01/2008
FOLEY AND LARDNER LLP
SUITE 500
3000 K STREET NW
WASHINGTON, DC 20007

EXAMINER

ART UNIT	PAPER NUMBER
1644	

MAIL DATE	DELIVERY MODE
05/01/2008	PAPER

Please find below and/or attached an Office communication concerning this application or proceeding.

The time period for reply, if any, is set in the attached communication.

UNITED STATES PATENT AND TRADEMARK OFFICE

Commissioner for Patents
United States Patent and Trademark Office
P.O. Box 1450
Alexandria, VA 22313-1450
www.uspto.gov

MAY 01 2008

FOLEY & LARDNER LLP
Customer Number: 22428

In re Application of	:
Shiro Kataoka et al.	: DECISION ON PETITION TO MAKE
12/053,461	: SPECIAL FOR NEW APPLICATION
Filed: March 21, 2008	: UNDER 37 C.F.R. § 1.102 & M.P.E.P.
Attorney Docket No.: 081356-0293	: § 708.02

This is a decision on the renewed petition filed on March 21, 2008 to make the above-identified application special for accelerated examination procedure under 37 C.F.R. § 1.102(d).

The petition to make the application special is **GRANTED**.

The application is eligible for accelerated examination and the petition complies with the conditions for granting the application special status pursuant to the "Change to Practice for Petitions in Patent Applications to Make Special and for Accelerated Examination" published June 26, 2006, in the Federal Register. (71 Fed. Reg. 36323).

The prosecution of the instant application will be conducted expeditiously according to the following guidelines.

1. The application will be docketed to an examiner and taken up for action within two weeks of the date of this decision.

2. Restriction Practice:
   If the examiner determines that the claims are not directed to a single invention, a telephone request to elect one single invention will be made pursuant to MPEP 812.01. As a prerequisite to the grant of this petition, the applicant has agreed to make an oral election, by telephone, without traverse. If the applicant refuses to make an election without traverse, or the examiner cannot reach the applicant after a reasonable effort, the examiner will treat the first claimed invention (invention defined by claim 1) as having being constructively elected without traverse for examination.

3. Office action:
   If it is determined that, after appropriate consultation, there is a potential rejection or any other issue to be addressed, the examiner will telephone the applicant and arrange an interview to discuss and resolve the issue. An Office action, other than a Notice of Allowance and Fee(s) Due (Notice of Allowance), will not be issued unless either: 1) an interview was conducted but did not result in an agreement that places the application in condition for allowance, or, 2) a determination is made that an interview would be unlikely to result in the application being placed in condition for allowance, and 3) an internal conference has been held to review any rejection of any claim.

4. Time for Reply:
   An Office action other than a Notice of Allowance or a Final Office action will set a shortened statutory period of one month or thirty days, whichever is longer, for reply with no extension of time available under 37 CFR 1.136(a). Failure to timely file a reply within this non-extendible period for reply will result in the abandonment of the application.

5. Reply by Applicant:
   A timely reply to an Office action other than the Notice of Allowance must be submitted electronically via EFS or EFS-web and limited to addressing the rejections, objections and requirement made. Any amendment that attempts to: 1) add claims which would result in more than three pending independent claims or more than twenty pending total claims; 2) present claims not encompassed by the pre-examination search or an updated accelerated examination support document; or 3) present claims that are directed a non-elected invention or an invention other than that previously claimed and examined in the application, will be treated as not fully responsive and will not be entered.

   For any amendment to the claims (including any new claim) that is not encompassed by the accelerated examination support document, applicant must provide an updated accelerated examination support document that encompasses the amended or new claims at the time of filing of the amendment.

   To proceed expeditiously with the examination, it is recommended that a reply with amendments made to any claim or with any new claim being added be accompanied by an updated accelerated examination support document or a statement explaining how the amended or new claim is supported by the original accelerated examination support document.

6. Information Disclosure Statement (IDS):
   Any IDS filed during prosecution must be submitted electronically via EFS or EFS-web, accompanied by an updated accelerated examination support document, and be in compliance with 37 CFR 1.97 and 1.98.

7. Post-Allowance Processing:
   To expedite processing of the allowed application into a patent, the applicant must: 1) pay the required fees within one month of the date of the Notice of Allowance, and 2) not file any post allowance papers not required by the Office. In no event may the issue fee be paid and accepted later than three months from the date of the Notice of Allowance.

8. After-Final and Appeal Procedures:
   To expedite prosecution, after receiving the Final Office action, applicant must: 1) promptly file a Notice of Appeal, an Appeal Brief and Appeal fees; and 2) not request a pre-appeal brief conference.

   Any amendment, affidavit or other evidence filed after Final Office action must comply with applicable rules and the requirements outlined in numbered paragraphs 5 and 6 above.

   On appeal, the application will proceed according to normal appeal procedures. After appeal, the application will again be treated special.

9. Proceedings Outside the Normal Examination Process:
   If the application becomes involved in a proceeding that is outside the normal examination process (e.g., a secrecy order, national security review, interference proceeding, petitions under 37 CFR 1.181, 182 or 183), the application will be treated special before and after such proceeding.

10. Final Disposition:
    The twelve month goal of this accelerated examination procedure ends with a final disposition. The mailing of a Final Office action, a Notice of Allowance, the filing of a Notice of Appeal, or the filing of a Request for Continued Examination (RCE) is the final disposition.

If, during prosecution, a paper is not filed electronically using EFS-web, a reply is filed but is not fully responsive, the application is involved in an appeal, or a proceeding outside normal examination process, the application will still be examined expeditiously, however, the final disposition may occur more than twelve months from the filing of the application.

Any inquiry regarding this decision should be directed to Dave T Nguyen, Technology Center Quality Assurance Specialist, at (571) 272-0731.

Dave Nguyen
TQAS TC 1600

UNITED STATES PATENT AND TRADEMARK OFFICE

Commissioner for Patents
United States Patent and Trademark Office
P.O. Box 1450
Alexandria, VA 22313-1450
www.uspto.gov

FOLEY & LARDNER LLP
975 PAGE MILL ROAD
PALO ALTO, CA 94304

COPY MAILED

AUG 24 2009

OFFICE OF PETITIONS

In re Application of
NAJAFI, Ramin et al.
Application No. 12/053,536
Filed: March 21, 2008
Attorney Docket No. **092890-0155**

DECISION ON PETITION
TO WITHDRAW
FROM RECORD

This is a decision on the Request to Withdraw as attorney or agent of record under 37 C.F.R. § 1.36(b), filed July 15, 2009.

The request is not approved because it is **moot**.

A review of the file record indicates that the power of attorney to FOLEY & LARDNER LLP has been revoked by the assignee of the patent application on July 29, 2009. Accordingly, the request to withdraw under 37 C.F.R. § 1.36(b) is moot.

All future communications from the Office will continue to be directed to the below-listed address until otherwise notified by applicant.

Telephone inquires concerning this decision should be directed to Tredelle Jackson at 571-272-2783.

Tredelle D. Jackson
Paralegal Specialist
Office of Petitions

cc: **HDC LLP**
3239 EL CAMINO REAL, SUITE 220
PALO ALTO CA 94306

UNITED STATES PATENT AND TRADEMARK OFFICE

Commissioner for Patents
United States Patent and Trademark Office
P.O. Box 1450
Alexandria, VA 22313-1450
www.uspto.gov

COPY MAILED
JUN 19 2008
OFFICE OF PETITIONS

EMIL CHANG
LAW OFFICES OF EMIL CHANG
874 JASMINE DRIVE
SUNNYDALE CA 94086

In re Application of	:	
Mayer, et al.	:	DECISION ON PETITION
Application No.: 12/053,546	:	
Filed: 21 March, 2008	:	
Attorney Docket No. Agate-12	:	

This is the decision in response to the petition under 37 C.F.R. §1.47(a), filed on 1 May, 2008.

The petition as considered under 37 C.F.R. §1.47(a), is **GRANTED.**

Petitioner has shown that the non-signing inventor has not replied/signed/joined after receipt of the entire application (description, claims, abstract, drawings), and has thus constructively refused to sign/join (and has made an oral expressed refusal to sign/join) in the filing of the above-identified application.

The application and papers have been reviewed and found in compliance with 37 C.F.R. §1.47(a). This application is hereby accorded Rule 1.47(a) status.

The record reflects that: Petitioner demonstrates that the entire application—description, claims, abstract and drawings—was sent to and received at the last known residence address of the non-signing inventor, and that the non-signing inventor has since failed and, thus, constructively refused to sign/join (and expressly refused to sign/join) in the filing of the above-identified application.

The availability of applications and application papers online to applicants/practitioners who diligently associate their Customer Number with the respective application(s) now provides an applicant/practitioner on-demand information as to events/transactions in an application. Thus, now if one wishes to know the progress in and/or status of an application or the accuracy of the data therein, one need only look at the file online.

Out of an abundance of caution, Petitioners always are reminded that those registered to practice *and* all others who make representations before the Office must inquire into the underlying facts of representations made to the Office and support averments with the appropriate documentation–since all owe to the Office the continuing duty to disclose.[1]

CONCLUSION

The instant petition under 37 C.F.R. §1.47 is **granted**.

As provided in 37 C.F.R. §1.47(c), this Office will forward notice of this application's filing to the non-signing inventor at the address given in the petition. Notice of the filing of this application will also be published in the Official Gazette.

The instant application is released to the Office of Patent Application Processing (OPAP) (formerly the Office of Initial Patent Examination (OIPE)) for further processing in due course.

While telephone inquiries regarding this decision may be directed to the undersigned at (571) 272-3214, it is noted that all practice before the Office is in writing (see: 37 C.F.R. §1.2[2]) and the proper authority for action on any matter in this regard are the statutes (35 U.S.C.), regulations (37 C.F.R.) and the commentary on policy (MPEP). Therefore, no telephone discussion may be controlling or considered authority for Petitioner's action(s).

/John J. Gillon, Jr./
John J. Gillon, Jr.
Senior Attorney
Office of Petitions

---

[1] See supplement of 17 June, 1999. The Patent and Trademark Office is relying on petitioner's duty of candor and good faith and accepting a statement made by Petitioner. See Changes to Patent Practice and Procedure, 62 Fed. Reg. at 53160 and 53178, 1203 Off. Gaz. Pat. Office at 88 and 103 (responses to comments 64 and 109)(applicant obligated under 37 C.F.R. §10.18 to inquire into the underlying facts and circumstances when providing statements to the Patent and Trademark Office). See specifically, the regulations at 37 C.F.R. §10.18.

[2] The regulations at 37 C.F.R. §1.2 provide:

§1.2 Business to be transacted in writing.
All business with the Patent and Trademark Office should be transacted in writing. The personal attendance of applicants or their attorneys or agents at the Patent and Trademark Office is unnecessary. The action of the Patent and Trademark Office will be based exclusively on the written record in the Office. No attention will be paid to any alleged oral promise, stipulation, or understanding in relation to which there is disagreement or doubt.

UNITED STATES PATENT AND TRADEMARK OFFICE

Commissioner for Patents
United States Patent and Trademark Office
P.O. Box 1450
Alexandria, VA 22313-1450
www.uspto.gov

COPY MAILED
JUN 19 2008
OFFICE OF PETITIONS

STEVEN WINEGARDEN
1063 SILVERTIP WAY
SUNNYVALE, CA 94086

In re Application of	:	
Mayer, et al.	:	COMMUNICATION
Application No.: 12/053,546	:	
Filed: 21 March, 2008	:	
Attorney Docket No. Agate-12	:	

Dear Steven Winegarden:

You are named as an inventor in the above-identified United States patent application, filed under the provisions of 35 U.S.C. 116 (United States Code), and 37 CFR 1.47, Rules of Practice in Patent Cases. Should a patent be granted on the application you will be designated therein as an inventor.

As a named inventor you are entitled to inspect any paper in the file wrapper of the application, order copies of all or any part thereof (at a prepaid cost per 37 CFR 1.19) or make your position of record in the application. Alternatively, you may arrange to do any of the preceding through a registered patent attorney or agent presenting written authorization from you. If you care to join the application, counsel of record (see below) would presumably assist you. Joining the application would entail the filing of an appropriate oath or declaration by you pursuant to 37 CFR 1.63.

Should you elect to join in the application, the contact information for Counsel of Record is set forth at the end of this Communication.

Should you seek to identify independent Counsel, you may find the Patent Attorneys/Agents Search engine of assistance (https://oedci.uspto.gov/OEDCI/).

Requests for information regarding your application should be directed to the File Information Unit at (703) 308-2733. Information regarding how to pay for and order a copy of the application, or a specific paper in the application, should be directed to the Certification Division at (571) 272-3150 or 1 (800) 972-6382 (outside the Washington, DC area).

While telephone inquiries regarding this communication may be directed to the undersigned at (571) 272-3214, it is noted that all practice before the Office is in writing (see: 37 C.F.R. §1.2[1]) and the proper authority for action on any matter in this regard are the statutes (35 U.S.C.), regulations (37 C.F.R.) and the commentary on policy (MPEP). Therefore, no telephone discussion may be controlling or considered authority for Petitioner's action(s). Moreover, the Office cannot neither advise you nor recommend Counsel in this matter.

/John J. Gillon, Jr./
John J. Gillon, Jr.
Senior Attorney
Office of Petitions

Counsel of Record:
EMIL CHANG
LAW OFFICES OF EMIL CHANG
874 JASMINE DRIVE
SUNNYDALE CA 94086

---

[1] The regulations at 37 C.F.R. §1.2 provide:

§1.2 Business to be transacted in writing.

All business with the Patent and Trademark Office should be transacted in writing. The personal attendance of applicants or their attorneys or agents at the Patent and Trademark Office is unnecessary. The action of the Patent and Trademark Office will be based exclusively on the written record in the Office. No attention will be paid to any alleged oral promise, stipulation, or understanding in relation to which there is disagreement or doubt.

UNITED STATES PATENT AND TRADEMARK OFFICE

UNITED STATES DEPARTMENT OF COMMERCE
United States Patent and Trademark Office
Address: COMMISSIONER FOR PATENTS
P.O. Box 1450
Alexandria, Virginia 22313-1450
www.uspto.gov

STEVEN J. CAHILL/ ALTERA CORP.
P.O. Box 779
MENLO PARK, CA 94026-0779

Mail Date: 04/21/2010

Applicant	: Boon Jin Ang	: DECISION ON REQUEST FOR
Patent Number	: 7639047	: RECALCULATION of PATENT
Issue Date	: 12/29/2009	: TERM ADJUSTMENT IN VIEW
Appliction No	: 12/053,573	: OF WYETH AND NOTICE OF INTENT TO
Filed	: 03/22/2008	: ISSUE CERTIFICATE OF CORRECTION
		:

The Request for Recalculation is **GRANTED** to the extent indicated.

The patent term adjustment has been determined to be **101** days. The USPTO will *sua sponte* issue a certificate of correction reflecting the amount of PTA days determined by the recalculation.

Prior to the issuance of the certificate of correction, the USPTO will afford patentee an opportunity to be heard and request reconsideration. Accordingly, patentee has **one month or thirty (30) days**, whichever is longer, to file a request for reconsideration of this patent term adjustment calculation. See 35 U.S.C. 154(b)(3)(B)(ii) and 37 CFR 1.322(a)(4). No extensions of time will be granted under 37 CFR 1.136.

Patentee should use document code PET.OP if electronically filing a request for reconsideration of this patent term adjustment calculation. The patentee must also include the information required by 37 CFR 1.705(b)(2) and the fee required by 37 CFR 1.18(e). If patentee does not file a timely request for reconsideration of this patent term adjustment calculation including the information required by 37 CFR 1.705(b)(2) and the fee required by 37 CFR 1.18(e), the USPTO will issue a certificate of correction reflecting the PTA determination noted above.

Patentee should be aware that in order to preserve the right to review in the United States District Court for the District of Columbia of the USPTO patent term adjustment determination, patentee must ensure that he or she also take the steps required under 35 U.S.C. 154(b)(4)(A) in a timely manner. Nothing in the request for recalculation should be construed as providing an alternative time frame for commencing a civil action under 35 U.S.C. 154(b)(4)(A).

Any questions concerning this decision should be directed to the Office of Patent Legal Administration at 571-272-7702.

UNITED STATES PATENT AND TRADEMARK OFFICE

Commissioner for Patents
United States Patent and Trademark Office
P.O. Box 1450
Alexandria, VA 22313-1450
www.uspto.gov

THREE PALM SOFTWARE LLC
367 PENN WAY
LOS GATOS CA 95032

COPY MAILED

FEB 05 2009

OFFICE OF PETITIONS

In re Application of
Heidi Daxoian Zhang et al.
Application No. 12/053,600
Filed: March 22, 2008
Title of Invention: **COMBINATION MACHINE LEARNING ALGORITHMS FOR COMPUTER-AIDED DETECTION, REVIEW AND DIAGNOSIS**

: DECISION ON PETITION

This is a decision on the petition filed December 24, 2008, under 37 CFR 1.181, to withdraw the holding of abandonment.

The petition is **GRANTED**.

A Notice to File Corrected Application Papers was mailed April 10, 2008 and set a two month period for response. No response having been filed, the application became abandoned June 11, 2008 and accordingly, a Notice of Abandonment was mailed December 11, 2008.

Petitioners argue that a response was filed May 7, 2008 and includes as proof, a copy of the Acknowledgment Receipt, acknowledging receipt of drawings. Petitioners therefore assert that the response was timely filed.

Upon a review of the Office EFS database, the drawings have been located with a receipt date of May 7, 2008 and have been moved over to the Image File Wrapper. The evidence submitted therefore corroborates a timely response to the Notice to File Corrected Application Papers mailed April 10, 2008. Accordingly, the holding of abandonment is withdrawn and the Notice of Abandonment is vacated. No petition fee Is due and none has been charged.

This matter is being referred to the Office of Patent Application Processing for appropriate action on the response filed May 7, 2008.

Telephone inquiries concerning this matter should be directed to the undersigned Petitions Attorney at (571) 272-3212.

Patricia Faison-Ball

Patricia Faison-Ball
Senior Petitions Attorney
Office of Petitions

UNITED STATES PATENT AND TRADEMARK OFFICE

Commissioner for Patents
United States Patent and Trademark Office
P.O. Box 1450
Alexandria, VA 22313-1450
www.uspto.gov

COPY MAILED

APR 2 4 2009

OFFICE OF PETITIONS

Three Palm Software LLC
367 Penn Way
Los Gatos, CA 95032

In re Application of Zhang et al. :
Application No. 12/053,609 :
Filing Date: March 23, 2008 :
For: Fast Preprocessing Algorithms for :
Digital Mammography CAD and :
Workstation :

Decision on Petition

This is a decision on the petition under 37 CFR 1.181 filed December 24, 2008, as supplemented on April 18, 2009, requesting the Office withdraw the holding of abandonment.

The petition is **granted**.

The Office mailed a Notice to File Corrected Application Papers on April 4, 2008. The Notice required the submission of corrected drawings. A reply to the April 4, 2008 Notice was not matched with the file. As a result, a Notice of Abandonment was mailed December 9, 2008.

Petitioner contends corrected drawings were filed on May 7, 2008, and has supplied a copy of a Electronic Acknowledgment Receipt dated May 7, 2008.

A review of the Electronic Acknowledgment Receipt dated May 7, 2008, indicates the "Application Type" was listed as "Utility Under 35 USC 111(a) (Pre-Grant Publication under 37 CFR 1.211 to 1.221)." The Receipt also listed the "PG Type" of "Original-publication - Amended."

Pre-Grant Publication submissions do not become part of the Office's image file wrapper for an application. Therefore, when petitioner used an incorrect Application Type when filing the reply, the reply papers were entered into the Pre-Grant publication database instead of the Office's image file wrapper for the application.

Since petitioner has proven the drawings were timely filed, although in an incorrect database, the petition is granted.

The Notice of Abandonment is hereby vacated and the holding of abandonment withdrawn.

The Office of Patent Application Processing will be informed of the instant decision and will either process the application using the April 18, 2008 drawings, or, if the Office of Patent Application Processing determines the drawings are not acceptable, mail a new Notice to File Corrected Application Papers.

Telephone inquiries regarding this communication should be directed to Petitions Attorney Steven Brantley at (571) 272-3203.

Charles Steven Brantley
Senior Petitions Attorney
Office of Petitions

PTO/SB/130 (03-08)
Approved for use through 04/30/2008. OMB 0651- 0031
U.S. Patent and Trademark Office; U.S. DEPARTMENT OF COMMERCE
Under the Paperwork Reduction Act of 1995, no persons are required to respond to a collection of information unless it contains a valid OMB control number

PETITION TO MAKE SPECIAL BASED ON AGE FOR ADVANCEMENT OF EXAMINATION UNDER 37 CFR 1.102(c)(1)

Application Information

Application Number	12/053,614	Confirmation Number	4632	Filing Date	2008-03-28
Attorney Docket Number (optional)	MoormanB.P.2	Art Unit	3749	Examiner	
First Named Inventor	William E. Moorman				
Title of Invention	Method and Device for Capture, Storage and Recirculation of Heat Energy				

Attention: Office of Petitions

An application may be made special for advancement of examination upon filing of a petition showing that the applicant is 65 years of age, or more. No fee is required with such a petition. See 37 CFR 1.102(c)(1) and MPEP 708.02 (IV).

APPLICANT HEREBY PETITIONS TO MAKE SPECIAL FOR ADVANCEMENT OF EXAMINATION IN THIS APPLICATION UNDER 37 CFR 1.102(c)(1) and MPEP 708.02 (IV) ON THE BASIS OF THE APPLICANT'S AGE.

A grantable petition requires one of the following items:
(1) Statement by one named inventor in the application that he/she is 65 years of age, or more; or
(2) Certification by a registered attorney/agent having evidence such as a birth certificate, passport, driver's license, etc. showing one named inventor in the application is 65 years of age, or more.

Name of Inventor who is 65 years of age, or older

Given Name	Middle Name	Family Name	Suffix
William	E.	Moorman	

A signature of the applicant or representative is required in accordance with 37 CFR 1.33 and 10.18.
Please see 37 CFR 1.4(d) for the format of the signature.

Select (1) or (2) :

○ (1) I am an inventor in this application and I am 65 years of age, or more.

◉ (2) I am an attorney or agent registered to practice before the Patent and Trademark Office, and I certify that I am in possession of evidence, and will retain such in the application file record, showing that the inventor listed above is 65 years of age, or more.

Signature	/s/	Date (YYYY-MM-DD)	2008-04-17
Name	Duncan G. Byers	Registration Number	50707

PTO/SB/130 (03-08)
Approved for use through 04/30/2008. OMB 0651- 0031
U.S. Patent and Trademark Office; U.S. DEPARTMENT OF COMMERCE
Under the Paperwork Reduction Act of 1995, no persons are required to respond to a collection of information unless it contains a valid OMB control number

Privacy Act Statement

The Privacy Act of 1974 (P.L. 93-579) requires that you be given certain information in connection with your submission of the attached form related to a patent application or patent. Accordingly, pursuant to the requirements of the Act, please be advised that: (1) the general authority for the collection of this information is 35 U.S.C. 2(b)(2); (2) furnishing of the information solicited is voluntary; and (3) the principal purpose for which the information is used by the U.S. Patent and Trademark Office is to process and/or examine your submission related to a patent application or patent. If you do not furnish the requested information, the U.S. Patent and Trademark Office may not be able to process and/or examine your submission, which may result in termination of proceedings or abandonment of the application or expiration of the patent.

The information provided by you in this form will be subject to the following routine uses:

1. The information on this form will be treated confidentially to the extent allowed under the Freedom of Information Act (5 U.S.C. 552) and the Privacy Act (5 U.S.C. 552a). Records from this system of records may be disclosed to the Department of Justice to determine whether the Fr eedom of Information Act requires disclosure of these records.

2. A record from this system of records may be disclosed, as a routine use, in the course of presenting evidence to a court, magistrate, or administrative tribunal, including disclosures to opposing counsel in the course of settlement negotiations.

3. A record in this system of records may be disclosed, as a routine use, to a Member of Congress submitting a request involving an individual, to whom the record pertains, when the individual has requested assistance from the Member with respect to the subject matter of the record.

4. A record in this system of records may be disclosed, as a routine use, to a contractor of the Agency having need for the information in order to perform a contract. Recipients of information shall be required to comply with the requirements of the Privacy Act of 1974, as amended, pursuant to 5 U.S.C. 552a(m).

5. A record related to an International Application filed under the Patent Cooperation Treaty in this system of records may be disclosed, as a routine use, to the International Bureau of the World Intellectual Property Organization, pursuant to the Patent Cooperation Treaty.

6. A record in this system of records may be disclosed, as a routine use, to another federal agency for purposes of National Security review (35 U.S.C. 181) and for review pursuant to the Atomic Energy Act (42 U.S.C. 218(c)).

7. A record from this system of records may be disclosed, as a routine use, to the Administrator, General Services, or his/her designee, during an inspection of records conducted by GSA as part of that agency's responsibility to recommend improvements in records management practices and programs, under authority of 44 U.S.C. 2904 and 2906. Such disclosure shall be made in accordance with the GSA regulations governing inspection of records for this purpose, and any other relevant (i.e., GSA or Commerce) directive. Such disclosure shall not be used to make determinations about indivi duals.

8. A record from this system of records may be disclosed, as a routine use, to the public after either publication of the application pursuant to 35 U.S.C. 122(b) or issuance of a patent pursuant to 35 U.S.C. 151. Further, a record may be disclosed, subject to the limitations of 37 CFR 1.14, as a routine use, to the public if the record was filed in an application which became abandoned or in which the proceedings were terminated and which application is referenced by either a published application, an application open to public inspections or an issued patent.

9. A record from this system of records may be disclosed, as a routine use, to a Federal, State, or local law enforcement agency, if the USPTO becomes aware of a violation or potential violation of law or regulation.

UNITED STATES PATENT AND TRADEMARK OFFICE

Commissioner for Patents
United States Patent and Trademark Office
P.O. Box 1450
Alexandria, VA 22313-1450
www.uspto.gov

In re Application of
William E. Moorman

Application No. 12053614

Filed: March 23,2008

Attorney Docket No. MoormanB.P.2

:DECISION ON PETITION TO MAKE SPECIAL
:UNDER 37 CFR 1.102(c)(1)

This is a decision on the electronic petition under 37 CFR 1.102 (c)(1) ,filed 17-APR-2008 to make the above-identified application special based on applicant's age as set forth in MPEP § 708.02, Section IV.

The petition is **GRANTED**.

A grantable petition to make an application special under 37 CFR 1.102(c)(1), MPEP § 708.02, Section IV: Applicant's Age must include a statement by applicant or a registered practitioner having evidence that applicant is at least 65 years of age. No fee is required.

Accordingly, the above-identified application has been accorded “special” status and will be taken up for action by the examiner upon the completion of all pre-examination processing.

Telephone inquires concerning this electronic decision should be directed to the Electronic Business Center at 866-217-9197.

All other inquires concerning either the examination or status of the application should be directed to the Technology Center.

UNITED STATES PATENT AND TRADEMARK OFFICE

Commissioner for Patents
United States Patent and Trademark Office
P.O. Box 1450
Alexandria, VA 22313-1450
www.uspto.gov

MAILED

JAN 28 2010

OFFICE OF PETITIONS

CARLSON, GASKEY & OLDS, P.C.
400 WEST MAPLE ROAD
SUITE 350
BIRMINGHAM, MI 48009

In re Patent No. 7,578,626	:	
Issue Date: August 25, 2009	:	
Application No. 12/053,651	:	ON PETITION
Filed: March 24, 2008	:	
Attorney Docket No. 67200-012; JSE-071-US	:	

This is a decision on the petition, filed November 11, 2009, which is being treated as a request under 37 CFR 3.81(b)[1] to correct the name of the assignee on the front page of the above-identified patent by way of a Certificate of Correction.

The request is **GRANTED**.

Telephone inquiries concerning this decision may be directed to the undersigned at (571) 272-3204. Inquiries regarding the issuance of a certificate of correction should be directed to the Certificates of Correction Branch at (571) 272-4200.

The Certificates of Correction Branch will be notified of this decision granting the petition under 37 CFR 3.81(b) and directing issuance of the requested Certificate of Correction.

Sherry D. Brinkley
Petitions Examiner
Office of Petitions

[1] *See* MPEP 1309, subsection II; and Official Gazette of June 22, 2004.

UNITED STATES PATENT AND TRADEMARK OFFICE

UNITED STATES DEPARTMENT OF COMMERCE
United States Patent and Trademark Office
Address: COMMISSIONER FOR PATENTS
P.O. Box 1450
Alexandria, Virginia 22313-1450
www.uspto.gov

APPLICATION NO.	FILING DATE	FIRST NAMED INVENTOR	ATTORNEY DOCKET NO.	CONFIRMATION NO.
12/053,735	03/24/2008	William H. Eby	1421-326	4855

32905 7590 01/28/2010
JONDLE & ASSOCIATES P.C.
858 HAPPY CANYON ROAD SUITE 230
CASTLE ROCK, CO 80108

EXAMINER
COLLINS, CYNTHIA E

ART UNIT	PAPER NUMBER
1638	

NOTIFICATION DATE	DELIVERY MODE
01/28/2010	ELECTRONIC

Please find below and/or attached an Office communication concerning this application or proceeding.

The time period for reply, if any, is set in the attached communication.

Notice of the Office communication was sent electronically on above-indicated "Notification Date" to the following e-mail address(es):

JondleOA@jondlelaw.com

UNITED STATES PATENT AND TRADEMARK OFFICE

Commissioner for Patents
United States Patent and Trademark Office
P.O. Box 1450
Alexandria, VA 22313-1450
www.uspto.gov

JONDLE & ASSOCIATES P.C.
858 HAPPY CANYON ROAD SUITE 230
CASTLE ROCK CO 80108

JAN 2 8 2010

In re Application of:	:
William H. Eby	:
Serial No.: 12/053,735	: PETITION DECISION
Filed: March 24, 2008	:
Attorney Docket No.: **1421-326**	

This is in response to the petition under 37 CFR § 1.59(b), filed September 28, 2009, to expunge information from the above identified application. This application has not been allowed.

Petitioner requests that the Reply to Request for Information under 37 CFR 1.105, and attachment thereto, submitted to the Patent Office on September 28, 2009, be expunged from the record. Petitioner states either: (A) that the information contains trade secret material, proprietary material and/or material that is subject to a protective order which has not been made public; or (B) that the information submitted was unintentionally submitted and the failure to obtain its return would cause irreparable harm to the party who submitted the information or to the party in interest on whose behalf the information was submitted, and the information has not otherwise been made public. The petition fee set forth in 37 CFR § 1.17(g) has been paid.

This is an examined application which is currently under non-final rejection. As such the information provided has been reviewed, in part, but proceedings in the application have not been terminated. As stated in M.P.E.P. 724, upon allowance or other action closing prosecution in an application, petition may be made for return of Proprietary information. The information cannot be expunged at this time.

The petition is **DISMISSED**. Petitioner may resubmit the petition subsequent to a Notice of Allowability or *ex parte Quayle* action being mailed in the application. No additional petition fee will be required at that time.

Should there be any questions about this decision please contact Marianne C. Seidel by letter addressed to Director, TC 1600, at the address listed above, or by telephone at 571-272-0584 or by facsimile sent to the general Office facsimile number, 703-872-9306.

Marianne C. Seidel
Quality Assurance Specialist
Technology Center 1600

UNITED STATES PATENT AND TRADEMARK OFFICE

UNITED STATES DEPARTMENT OF COMMERCE
United States Patent and Trademark Office
Address: COMMISSIONER FOR PATENTS
P.O. Box 1450
Alexandria, Virginia 22313-1450
www.uspto.gov

APPLICATION NO.	FILING DATE	FIRST NAMED INVENTOR	ATTORNEY DOCKET NO.	CONFIRMATION NO.
12/053,735	03/24/2008	William H. Eby	1421-326	4855

32905 7590 06/09/2010
JONDLE & ASSOCIATES P.C.
858 HAPPY CANYON ROAD SUITE 230
CASTLE ROCK, CO 80108

EXAMINER
COLLINS, CYNTHIA E

ART UNIT	PAPER NUMBER
1638	

NOTIFICATION DATE	DELIVERY MODE
06/09/2010	ELECTRONIC

Please find below and/or attached an Office communication concerning this application or proceeding.

The time period for reply, if any, is set in the attached communication.

Notice of the Office communication was sent electronically on above-indicated "Notification Date" to the following e-mail address(es):

JondleOA@jondlelaw.com

UNITED STATES PATENT AND TRADEMARK OFFICE

Commissioner for Patents
United States Patent and Trademark Office
P.O. Box 1450
Alexandria, VA 22313-1450
www.uspto.gov

JONDLE & ASSOCIATES P.C.
858 HAPPY CANYON ROAD SUITE 230
CASTLE ROCK CO 80108

JUN 0 9 2010

In re Application of:
William H. Eby
Serial No.: 12/053,735
Filed: March 24, 2008
Attorney Docket No.: **1421-326**

: PETITION DECISION

This is in response to the petition under 37 CFR § 1.59(b), filed April 29, 2010, to expunge information from the above identified application. This application has not been allowed.

Petitioner requests that the Reply to Request for Information under 37 CFR 1.105, and attachment thereto, submitted to the Patent Office on April 29, 2010, be expunged from the record. Petitioner states either: (A) that the information contains trade secret material, proprietary material and/or material that is subject to a protective order which has not been made public; or (B) that the information submitted was unintentionally submitted and the failure to obtain its return would cause irreparable harm to the party who submitted the information or to the party in interest on whose behalf the information was submitted, and the information has not otherwise been made public. The petition fee set forth in 37 CFR § 1.17(g) has been paid.

This is an examined application which is currently under non-final rejection. As such the information provided has been reviewed, in part, but proceedings in the application have not been terminated. As stated in M.P.E.P. 724, upon allowance or other action closing prosecution in an application, petition may be made for return of Proprietary information. The information cannot be expunged at this time.

The petition is **DISMISSED**. Petitioner may resubmit the petition subsequent to a Notice of Allowability or *ex parte Quayle* action being mailed in the application. No additional petition fee will be required at that time.

Should there be any questions about this decision please contact Marianne C. Seidel by letter addressed to Director, TC 1600, at the address listed above, or by telephone at 571-272-0584 or by facsimile sent to the general Office facsimile number, 703-872-9306.

Marianne C. Seidel
Quality Assurance Specialist
Technology Center 1600

UNITED STATES PATENT AND TRADEMARK OFFICE

Commissioner for Patents
United States Patent and Trademark Office
P.O. Box 1450
Alexandria, VA 22313-1450
www.uspto.gov

Paper No.

SUTHERLAND ASBILL & BRENNAN LLP
999 PEACHTREE STREET, N.E.
ATLANTA GA 30309

COPY MAILED

SEP 02 2008

OFFICE OF PETITIONS

In re Application of	:	
Davis et al.	:	ON PETITION
Application No. 12/053,759	:	
Filed: March 24, 2008	:	
Atty Docket No. 19441-0212	:	

This is in response to the "PETITION UNDER 37 C.F.R. § 1.57(a) TO ADD INADVERTENTLY OMITTED MATERIAL" filed April 21, 2008, requesting that the above-referenced application be accorded a filing date. This petition is being treated pursuant to 37 CFR 1.53(e)(2)[1].

To the extent the instant petition requests a filing date of March 24, 2008 with no drawings present in the application, the petition is **GRANTED**.

If applicants desire to accept the date of submission of the drawings (April 21, 2008) as the application filing date, then applicants must, within 2 months from the date of this decision, file an oath or declaration in compliance with 37 CFR 1.63 and 37 CFR 1.64 referring to such drawings and a petition under 37

[1] Any request for review of a notification pursuant to paragraph (e)(1) of this section, or a notification that the original application papers lack a portion of the specification or drawing(s), must be by way of a petition pursuant to this paragraph accompanied by the fee set forth in § 1.17(f). In the absence of a timely (§ 1.181(f)) petition pursuant to this paragraph, the filing date of an application in which the applicant was notified of a filing error pursuant to paragraph (e)(1) of this section will be the date the filing error is corrected.

CFR 1.182 with the petition fee set forth in 37 CFR 1.17(f), requesting the later filing date (37 CFR 1.181(f)). The 2-month period is not extendable under 37 CFR 1.136. Any such petition not filed within **TWO (2) MONTHS** of this decision may be dismissed as untimely without consideration on the merits.

Application papers in the above-identified application were deposited on March 24, 2008. However, on April 9, 2008, the Office mailed applicants a "Notice of Incomplete Nonprovisional Application," notifying applicants that the application papers had not been accorded a filing date because the application was deposited without drawings.

In response, applicants timely filed this petition. Applicants request that three (3) sheets of drawings be entered into the prosecution of this application, as they were inadvertently omitted when the application was initially filed and are relevant to the prosecution of the application.

37 CFR § 1.57 provides, in pertinent part, that:

> (a) Subject to the conditions and requirements of this paragraph, if all or a portion of the specification or drawing(s) is inadvertently omitted from an application, but the application contains a claim under § 1.55 for priority of a prior-filed foreign application, or a claim under § 1.78 for the benefit of a prior-filed provisional, nonprovisional, or international application, that was present on the filing date of the application, and the inadvertently omitted portion of the specification or drawing(s) is completely contained in the prior-filed application, the claim under § 1.55 or § 1.78 shall also be considered an incorporation by reference of the prior-filed application as to the inadvertently omitted portion of the specification or drawing(s).

By the express terms of the rule, rule 57 is only applicable if there is a claim under 1.55 or a claim under 1.78 present on the filing date of the application. Applicants merely request that inadvertently omitted drawings be entered. Applicants do not state that this application claims the benefit of any other application. A review of this application as filed confirms that no claim under § 1.55 for priority of a prior-filed foreign application, and no claim under § 1.78 for the benefit of a prior-filed provisional, nonprovisional, or international

application, was present on the filing date of this application. In this instance, applicants have not shown entitlement to rely on 1.57(a) for amendment of the application to include the inadvertently omitted drawings. There is no basis for entering these drawings pursuant to 37 CFR 1.57(a).
Moreover, applicants do not set forth any other proper basis for entering the drawings. Whether or not the drawings are relevant to the prosecution of the application as argued by applicants is not dispositive of the issue of whether they may be entered into the application. The application is not entitled to a filing date with the omitted drawings.

Nonetheless, with respect to according this application a filing date, it is controlling that a review of the application confirms that as filed the application contained at least one method claim. MPEP 601.01(f) provides that:

> It has been USPTO practice to treat an application that contains at least one process or method claim as an application for which a drawing is not necessary for an understanding of the invention under 35 U.S.C. 113 (first sentence).

Thus, pursuant to § 601.01(f), a drawing is not considered essential for a filing date. Thus, the application is entitled to a filing date <u>without</u> drawings present in the application.

Accordingly, the Office should have mailed a Notice of Omitted Items and not a Notice of Incomplete Nonprovisional Application. CFR 1.57(a) and 37 CFR 1.121. See MPEP § 201.17. Given that the application is entitled to a filing date, no petition for a filing date was required.

To the extent the instant petition requests a filing date of March 24, 2008 with no drawings present in the application, the petition is granted.

Given the basis for granting this petition, the petition fee will be refunded to Deposit Account No. 19-5029, as authorized.

Applicants are reminded that §1.57(a) cannot be relied on to amend the application to include the drawings filed on April 21, 2008 absent a showing that the drawings are completed contained in an application to which a claim under 37 CFR 1.55 or 37 CFR 1.78 was made on filing of this application.

The Office of Patent Application Processing has been advised of this decision. Pursuant to this decision, the application has been referred for:

- **according of a filing date of March 24, 2008**;
- **for indication in Office records, as appropriate, that "0" sheets of drawings were present on filing** and
- **for issuance of a filing receipt.**

Telephone inquiries concerning this matter may be directed to Senior Petitions Attorney, Nancy Johnson at (571) 272-3219.

Anthony Knight
Supervisor
Office of Petitions

UNITED STATES PATENT AND TRADEMARK OFFICE

Commissioner for Patents
United States Patent and Trademark Office
P.O. Box 1450
Alexandria, VA 22313-1450
www.uspto.gov

J C PATENTS
4 VENTURE, SUITE 250
IRVINE CA 92618

COPY MAILED

NOV 10 2009

OFFICE OF PETITIONS

In re Application of	:	
Tan et al.	:	
Application No. 12/053,778	:	ON PETITION
Filed: March 24, 2008	:	
Attorney Docket No. JCLA26149	:	

This is a notice regarding your request for acceptance of a fee deficiency submission under 37 CFR 1.28. On September 1, 1998, the Court of Appeals for the Federal Circuit held that 37 CFR 1.28(c) is the sole provision governing the time for correction of the erroneous payment of the issue fee as a small entity. **See DH Technology v. Synergystex International, Inc. 154 F.3d 1333, 47 USPQ2d 1865 (Fed. Cir. Sept. 1, 1998).**

The Office no longer investigates or rejects original or reissue applications under 37 CFR 1.56. **1098 Off. Gaz. Pat. Office 502 (January 3, 1989)**. Therefore, nothing in this Notice is intended to imply that an investigation was done.

Your fee deficiency submission under 37 CFR 1.28 is hereby **ACCEPTED**.

This application is no longer entitled to small entity status. Accordingly, all future fees paid in this application must be paid at the large entity rate.

Telephone inquiries concerning this decision should be directed to Joan Olszewski at (571) 272-7751.

/Liana Walsh/
Liana Walsh
Petitions Examiner
Office of Petitions

UNITED STATES PATENT AND TRADEMARK OFFICE

UNITED STATES DEPARTMENT OF COMMERCE
United States Patent and Trademark Office
Address: COMMISSIONER FOR PATENTS
P.O. Box 1450
Alexandria, Virginia 22313-1450
www.uspto.gov

SIEMENS CORPORATION
INTELLECTUAL PROPERTY DEPARTMENT
170 WOOD AVENUE SOUTH
ISELIN, NJ 08830

Mail Date: 04/23/2010

Applicant	: Michael Twerdochlib	: DECISION ON REQUEST FOR
Patent Number	: 7605712	: RECALCULATION of PATENT
Issue Date	: 10/20/2009	: TERM ADJUSTMENT IN VIEW
Appliction No	: 12/053,794	: OF WYETH AND NOTICE OF INTENT TO
Filed	: 03/24/2008	: ISSUE CERTIFICATE OF CORRECTION
		:

The Request for Recalculation is **GRANTED** to the extent indicated.

The patent term adjustment has been determined to be **22** days. The USPTO will *sua sponte* issue a certificate of correction reflecting the amount of PTA days determined by the recalculation.

Prior to the issuance of the certificate of correction, the USPTO will afford patentee an opportunity to be heard and request reconsideration. Accordingly, patentee has **one month or thirty (30) days**, whichever is longer, to file a request for reconsideration of this patent term adjustment calculation. See 35 U.S.C. 154(b)(3)(B)(ii) and 37 CFR 1.322(a)(4). No extensions of time will be granted under 37 CFR 1.136.

Patentee should use document code PET.OP if electronically filing a request for reconsideration of this patent term adjustment calculation. The patentee must also include the information required by 37 CFR 1.705(b)(2) and the fee required by 37 CFR 1.18(e). If patentee does not file a timely request for reconsideration of this patent term adjustment calculation including the information required by 37 CFR 1.705(b)(2) and the fee required by 37 CFR 1.18(e), the USPTO will issue a certificate of correction reflecting the PTA determination noted above.

Patentee should be aware that in order to preserve the right to review in the United States District Court for the District of Columbia of the USPTO patent term adjustment determination, patentee must ensure that he or she also take the steps required under 35 U.S.C. 154(b)(4)(A) in a timely manner. Nothing in the request for recalculation should be construed as providing an alternative time frame for commencing a civil action under 35 U.S.C. 154(b)(4)(A).

Any questions concerning this decision should be directed to the Office of Patent Legal Administration at 571-272-7702.

UNITED STATES PATENT AND TRADEMARK OFFICE

UNITED STATES DEPARTMENT OF COMMERCE
United States Patent and Trademark Office
Address: COMMISSIONER FOR PATENTS
P.O. Box 1450
Alexandria, Virginia 22313-1450
www.uspto.gov

APPLICATION NO.	FILING DATE	FIRST NAMED INVENTOR	ATTORNEY DOCKET NO.	CONFIRMATION NO.
12/053,799	03/24/2008	Aaron R. Cox	SJO920070130US1	4976

59425 7590 07/17/2008
CANTOR COLBURN LLP - IBM TUSCON DIVISION
20 Church Street
22nd Floor
Hartford, CT 06103

EXAMINER
KINCAID, KRISTINE LYNN

ART UNIT	PAPER NUMBER
2139	

MAIL DATE	DELIVERY MODE
07/17/2008	PAPER

Please find below and/or attached an Office communication concerning this application or proceeding.

The time period for reply, if any, is set in the attached communication.

UNITED STATES PATENT AND TRADEMARK OFFICE

COMMISSIONER FOR PATENTS
UNITED STATES PATENT AND TRADEMARK OFFICE
WASHINGTON, DC 20231
www.uspto.gov

Dave Christensen
Cantor Colburn LLP-IBM Tuscon Division
20 Church Street
22nd Floor
Hartford CT 06103

In re Application of:
Aaron Cox et al.
Serial No.: 12/053799
Filed: March 24, 2008
Docket: **SJO920070130US1**
For: **Method of Authenticating a User on Multiple Devices using a Procedural Memory Based Password**

DECISION ON PETITION TO MAKE SPECIAL FOR NEW APPLICATION UNDER 37 C.F.R. § 1.102 & M.P.E.P. § 708.02

This is a decision on the petition filed on March 24, 2007 to make the above-identified application special for accelerated examination procedure under 37 C.F.R. § 1.102(d).

The petition to make the application special is **DISMISSED**.

REGULATION AND PRACTICE

A grantable petition to make special under 37 C.F.R. § 1.102(d) and pursuant to the "Change to Practice for Petitions in Patent Applications to Make Special and for Accelerated Examination" published in the Federal Register on June 26, 2006 (71 Fed. Reg. 36323), must satisfy the following conditions:

I. Conditions Regarding the Application:

1. the application must be a non-reissue utility or design application filed under 37 CFR 1.111(a);
2. the application, the petition and the required fees must be filed electronically using the USPTO's electronic filing system (EFS), or EFS-web; if not filed electronically, a statement asserting that EFS and EFS-web were not available during the normal business hours.
3. at the time of filing, the application must be complete under 37 CFR 1.51 and in condition for examination;

4. the application must contain three or fewer independent claims and twenty or fewer total claims and the claims must be directed to a single invention.

II. Conditions Regarding the Petition:

The petition must:

1. be filed with the application;

2. include a statement that applicant agrees not to separately argue the patentability of any independent claim during any appeal in the application;

3. include a statement that applicant agrees to make an election without traverse in a telephone interview.

4. include a statement that applicant agrees to conduct such an interview when requested by the examiner.

5. include a statement, made based on a good faith belief, that a preexamination search in compliance with the following requirements, was conducted, including an identification of the filed of search by United States class and subclass, where applicable, and for database searches, the search logic or chemical structure or sequence used as a query, the name of the file(s) searched and the database service, and the date of the search.

The preexamination search must:

5.1 involve U.S. patents and patent application publications, foreign patent documents, and non-patent literature, unless the applicant can justify with reasonable certainty that no references more pertinent than those already identified are likely to be found in the eliminated sources and includes such a justification with this statement;

5.2. be directed to the claimed invention and encompass all of the features of the claims, giving the claims the broadest reasonable interpretation;

5.3. encompass the disclosed features that may be claimed.

6. must provide in support of the petition an accelerated examination support document. An accelerated examination support document must include:

6.1. an information disclosure statement (IDS) in compliance with 37 CFR 1.98 citing each reference deemed most closely related to the subject matter of each of the claims;

6.2. an identification of all the limitations in the claims that are disclosed by the reference specifying where the limitation is disclosed in the cited reference;

6.3. a detailed explanation of how each of the claims are patentable over the references cited with particularity required by 37 CFR 1.111(b) and (c);

6.4. a concise statement of the utility of the invention as defined in each of the independent claims (unless the application is a design application);

6.5. a showing of where each limitation of the claims finds support under 35 USC 112, first paragraph, in the written description of the specification. If applicable, the showing must also identify: (1) each means- (or step) plus-function claim element that invokes consideration under 35 UDC 112, sixth paragraph; and (2) the structure, material, or acts in the specification that corresponds to each means- (or step) plus-function claim element that invokes consideration under 35 UDC 112, sixth paragraph; if the application claims the benefit of one or more applications under title 35, United States Code, the showing must also include where each limitation of the claims finds support under 35 USC 112, first paragraph, in each such application in which such supports exists;

6.6. an identification of any cited references that may be disqualified under 35 USC 103(c).

REVIEW OF FACTS

The conditions I 1-4, II 1-4 and II 5.1, 5.3, II and 6.1-6.6 above are considered to have been met. However, the petition fails to comply with condition II 5.2 above. Therefore, the petition fails to meet the required conditions to be accorded special status under the accelerated examination procedure.

Regarding the requirement of MPEP § 708.02(a)(I.)(H)[1] and items II.5.2 above, the preexamination search does not encompass all of the features of the claims, and does not appear to have given the claims the broadest reasonable interpretation.

Specifically, the text search strategy fails to include a reasonable number of synonyms for a number of the claim terms for example password should include pin, secret, passphrase and pass phrase, authenticate should be truncated authentic$ and verify$, authorize$ and validate should be included, phone should be added to telephone. Petitioner should review all claim limitations, especially those asserted as patentable distinctions from the cited references to ensure that the search covers these concepts, and update the search and/or provide any clarifications if deemed necessary.

Finally, based upon the claimed subject matter of the instant application, a search in the following class and subclasses is recommended in order to provide full coverage of where the most pertinent references are most likely to be found: Class 713 (Computer Support) subclasses 183-184 (password entry and pin generation), Class 726 (Information Security) subclass 6 (management of authorization control) and Class 235 (Registers) subclass 382 (permitting access) for subject matter related to access of a system via passwords. This additional search area was confirmed with an examiner in the pertinent art area.

DECISION

For the above-stated reasons, the petition is **dismissed**. The application will therefore be taken up by the examiner for action in its regular turn.

Petitioner is given a single opportunity to perfect the petition. Any request for reconsideration of this decision must be submitted within 1 (one) month or 30 (thirty) days, whichever is longer, (no extension of time under 37 CFR 1.136(a)) from the date of this decision in order to be considered timely. Any request for reconsideration must address the deficiencies indicated above.

Petitioner is reminded that, upon granting of the special status of the application on request for reconsideration, the application will be processed expeditiously. However, due to the dismissal of the instant petition, examination may not be completed within twelve months of the filing date of the application.

[1] MPEP 8th ed. rev 5 August 2006

Any inquiry regarding this decision should be directed to Tod Swann, Quality Assurance Specialist, at (571) 272-3612. A second point of contact is QAS Kim Huynh at (571) 272-4147.

Tod R Swann
Quality Assurance Specialist
Technology Center 2100
Computer Security, Architecture and Software
571-272-3612

UNITED STATES PATENT AND TRADEMARK OFFICE

UNITED STATES DEPARTMENT OF COMMERCE
United States Patent and Trademark Office
Address: COMMISSIONER FOR PATENTS
P.O. Box 1450
Alexandria, Virginia 22313-1450
www.uspto.gov

APPLICATION NO.	FILING DATE	FIRST NAMED INVENTOR	ATTORNEY DOCKET NO.	CONFIRMATION NO.
12/053,799	03/24/2008	Aaron R. Cox	SJO920070130US1	4976

59425 7590 09/16/2008
CANTOR COLBURN LLP - IBM TUSCON DIVISION
20 Church Street
22nd Floor
Hartford, CT 06103

EXAMINER
KINCAID, KRISTINE LYNN

ART UNIT	PAPER NUMBER
2139	

MAIL DATE	DELIVERY MODE
09/16/2008	PAPER

Please find below and/or attached an Office communication concerning this application or proceeding.

The time period for reply, if any, is set in the attached communication.

UNITED STATES PATENT AND TRADEMARK OFFICE

COMMISSIONER FOR PATENTS
UNITED STATES PATENT AND TRADEMARK OFFICE
WASHINGTON, DC 20231
www.uspto.gov

Dave Christensen
Cantor Colburn LLP-IBM Tuscon Division
20 Church Street
22nd Floor
Hartford CT 06103

In re Application of:
Aaron Cox et al.
Serial No.: 12/053799
Filed: March 24, 2008
Docket: **SJO920070130US1**
For: **Method of Authenticating a User on Multiple Devices using a Procedural Memory Based Password**

DECISION ON PETITION TO MAKE SPECIAL FOR NEW APPLICATION UNDER 37 C.F.R. § 1.102 & M.P.E.P. § 708.02

This is a decision on the petition filed on to make the above-identified application special for accelerated examination procedure under 37 C.F.R. § 1.102(d).

This is a decision on the renewed petition filed on August 04, 2008 to make the above-identified application special for accelerated examination procedure under 37 C.F.R. § 1.102(d). The original petition, submitted on March 24, 2008 was dismissed in the decision mailed on July 17, 2008.

The renew petition to make the application special is **GRANTED** as the new Search Document meets the requirements of conditions II 5.2 that were deficient in the original petition.

The application is eligible for accelerated examination and the renewed petition complies with the conditions for granting the application special status pursuant to the "Change to Practice for Petitions in Patent Applications to Make Special and for Accelerated Examination" published June 26, 2006, in the Federal Register. (71 Fed. Reg. 36323) as the original identified deficiencies for failing to comply with the requirements for the pre-examination search encompassing all of the features of the claims, and giving the claims the broadest reasonable interpretation, the statement of patentability

must provide a detailed explanation of how each of the claims are patentable and the concise statement of the utility must be of the invention as defined in each of the independent claims (reference must be made to independent claims 1, 14 and 20) have been corrected.

The prosecution of the instant application will be conducted expeditiously according to the following guidelines.

1. The application will be docketed to an examiner and taken up for action within two weeks of the date of this decision.

2. Restriction Practice:
If the examiner determines that the claims are not directed to a single invention, a telephone request to elect one single invention will be made pursuant to MPEP 812.01. As a prerequisite to the grant of this petition, the applicant has agreed to make an oral election, by telephone, without traverse. If the applicant refuses to make an election without traverse, or the examiner cannot reach the applicant after a reasonable effort, the examiner will treat the first claimed invention (invention defined by claim 1) as having being constructively elected without traverse for examination.

3. Office action:
If it is determined that, after appropriate consultation, there is a potential rejection or any other issue to be addressed, the examiner will telephone the applicant and arrange an interview to discuss and resolve the issue. An Office action, other than a Notice of Allowance and Fee(s) Due (Notice of Allowance), will not be issued unless either: 1) an interview was conducted but did not result in agreed to action that places the application in condition for allowance, or, 2) a determination is made that an interview would be unlikely to result in the application being placed in condition for allowance, and 3) an internal conference has been held to review any rejection of any claim.

4. Time for Reply:
An Office action other than a Notice of Allowance or a final Office action will set a shortened statutory period of one month or thirty days, whichever is longer, for reply with no extension of time available under 37 CFR 1.136(a). Failure to timely file a reply within this non-extendible period for reply will result in the abandonment of the application.

5. Reply by Applicant:
A timely reply to an Office action other than the Notice of Allowance must be submitted electronically via EFS or EFS-web and limited to addressing the rejections, objections and requirement made. Any amendment that attempts to: 1) add claims which would result in more than three pending independent claims or more than twenty pending total claims; 2) present claims not encompassed by the pre-examination search or an updated accelerated

examination support document; or 3) present claims that are directed a non-elected invention or an invention other than that previously claimed and examined in the application, will be treated as not fully responsive and will not be entered.

For any amendment to the claims (including any new claim) that is not encompassed by the accelerated examination support document, applicant must provide an updated accelerated examination support document that encompasses the amended or new claims at the time of filing of the amendment.

To proceed expeditiously with the examination, it is recommended that a reply with amendments made to any claim or with any new claim being added be accompanied by an updated accelerated examination support document or a statement explaining how the amended or new claim is supported by the original accelerated examination support document.

6. Information Disclosure Statement (IDS):
Any IDS filed during prosecution must be submitted electronically via EFS or EFS-web, accompanied by an updated accelerated examination support document, and be in compliance with 37 CFR 1.97 and 1.98.

7. Post-Allowance Processing:
To expedite processing of the allowed application into a patent, the applicant must: 1) pay the required fees within one month of the date of the Notice of Allowance, and 2) not file any post allowance papers not required by the Office. In no event may the issue fee be paid and accepted later than three months from the date of the Notice of Allowance.

8. After-Final and Appeal Procedures:
To expedite prosecution, after receiving the final Office action, applicant must: 1) promptly file a notice of appeal, an appeal brief and appeal fees; and 2) not request a pre-appeal brief conference.

Any amendment, affidavit or other evidence filed after final Office action must comply with applicable rules and the requirements outlined in numbered paragraphs 5 and 6 above.

On appeal, the application will proceed according to normal appeal procedures. After appeal, the application will again be treated special.

9. Proceedings Outside the Normal Examination Process:
If the application becomes involved in a proceeding that is outside the normal examination process (e.g., a secrecy order, national security review,

interference proceeding, petitions under 37 CFR 1.181, 182 or 183), the application will be treated special before and after such proceeding.

10. Final Disposition:
The twelve month goal of this accelerated examination procedure ends with a final disposition. The mailing of a final Office action, a Notice of Allowance, the filing of a Notice of Appeal, or the filing of a Request for Continued Examination (RCE) is the final disposition.

If, during prosecution, a paper is not filed electronically using EFS-web, a reply is filed but is not fully responsive, the application is involved in an appeal, or a proceeding outside normal examination process, the application will still be examined expeditiously, however, the final disposition may occur more than twelve months from the filing of the application.

Any inquiry regarding this decision should be directed to Tod Swann, Quality Assurance Specialist, at (571) 272-3612. A second point of Contact is Kim Huynh at (571)-272-4147.

Tod R Swann
Quality Assurance Specialist
Technology Center 2100
Computer Security, Architecture and Software

UNITED STATES PATENT AND TRADEMARK OFFICE

Commissioner for Patents
United States Patent and Trademark Office
P.O. Box 1450
Alexandria, VA 22313-1450
www.uspto.gov

MAILED

MAY 03 2010

OFFICE OF PETITIONS

MCKEE, VOORHEES & SEASE, P.L.C.
801 GRAND AVENUE, SUITE 3200
DES MOINES, IA 5009-2721

In re Application of: John Douglas IDOINE
Application No. 12/053,801
Filed: March 24, 2008
Attorney Docket No. P08421US01

DECISION ON PETITION

This is a decision on the petition under 37 CFR 1.137(b), filed February 19, 2010, to revive the above-identified application.

The petition is GRANTED.

The application became abandoned for failure to reply in a timely manner to the non-final Office action mailed December 16, 2008, which set a shortened statutory period for reply of three (3) months. No extensions of time under the provisions of 37 CFR 1.136(a) were obtained. Accordingly, the application became abandoned on March 17, 2009.

The application is being revived solely for purposes of continuity. As continuity has been established by this decision reviving the application, the application is again abandoned in favor of continuing application No. 12/709,065 filed February 19, 2010.

An extension of time under 37 CFR 1.136 must be filed prior to the expiration of the maximum extendable period for reply. See In re Application of S., 8 USPQ2d 1630, 1631 (Comm'r Pats. 1988). Since the $555.00 extension of time fee submitted with the petition on February 19, 2010 was subsequent to the maximum extendable period for reply, this fee is unnecessary and will be credited to petitioner's deposit account.

Telephone inquiries concerning this decision should be directed to Shahid Alam at (571) 272-6052 or in his absence to the undersigned at (571) 272-7099.

David A. Bucci
Petitions Examiner
Office of Petitions

UNITED STATES PATENT AND TRADEMARK OFFICE

Commissioner for Patents
United States Patent and Trademark Office
P.O. Box 1450
Alexandria, VA 22313-1450
www.uspto.gov

CARLSON, GASKEY & OLDS, P.C.
400 WEST MAPLE ROAD, SUITE 350
BIRMINGHAM MI 48009

COPY MAILED

APR 22 2008

OFFICE OF PETITIONS

In re Application of
GOLDSTEIN, Fredric
Application No. 12/053,815
Filed: March 24, 2008
Attorney Docket No. **67261-001 PUS2**

DECISION ON PETITION
TO MAKE SPECIAL UNDER
37 CFR 1.102(c)(1)

This is a decision on the petition under 37 CFR 1.102(c)(1), filed April 4, 2008, to make the above-identified application special based on applicant's age as set forth in M.P.E.P. § 708.02, Section IV.

The petition is **GRANTED.**

A grantable petition to make an application special under 37 CFR 1.102(c)(1) and MPEP § 708.02, Section IV: Applicant's Age must be accompanied by evidence showing that at least one of the applicants is 65 years of age, or more, such as a birth certificate or a statement by applicant. No fee is required

The instant petition includes the declaration of inventor Robert M. Barto Jr., attesting to his age. Accordingly, the above-identified application will be accorded "special" status.

Inquiries concerning either the examination or status of the application should be directed to the Office of Patent Application Processing at 571-272-4000.

Telephone inquiries concerning this decision should be directed to the undersigned at 571-272-7253.

The application is being forwarded to the office of Initial Patent Examination for processing. This application will be accorded "special" status when pre-examination processing is done.

Monica A. Graves
Petitions Examiner
Office of Petitions

UNITED STATES PATENT AND TRADEMARK OFFICE

UNITED STATES DEPARTMENT OF COMMERCE
United States Patent and Trademark Office
Address: COMMISSIONER FOR PATENTS
P.O. Box 1450
Alexandria, Virginia 22313-1450
www.uspto.gov

APPLICATION NO.	FILING DATE	FIRST NAMED INVENTOR	ATTORNEY DOCKET NO.	CONFIRMATION NO.
12/053,835	03/24/2008	Kunio Ishikawa	324060US0	5036

7590 04/02/2009
OBLON, SPIVAK, MCCLELLAND MAIER & NEUSTADT, P.C.
1940 DUKE STREET
ALEXANDRIA, VA 22314

EXAMINER
BOWMAN, ANDREW J

ART UNIT	PAPER NUMBER
1792	

NOTIFICATION DATE	DELIVERY MODE
04/02/2009	ELECTRONIC

DECISION GRANTING PETITION UNDER 37 CFR 1.138(d)

The declaration of express abandonment is recognized

This is in response to the petition under 37 CFR 1.138(d), requesting for a refund of any previously paid search fee and excess claims fee in the above-identified application.

The petition is granted.

The express abandonment is recognized. Any previously paid search fee and excess claims fee are hereby refunded.

Telephone inquiries should be directed to the Office of Data Management at (571) 272-4200.

Nioni Farmer

Patent Publication Branch
Office of Data Management

Refund Ref:
04/01/2009 0030068352

Credit Card Refund Total: $510.00

Ac Exp..: XXXXXXXXXXX1006

Adjustment date: 04/01/2009 NFARMER
03/25/2008 INTEFSW 00000313 12053835
02 FC:1111 -510.00 OP

FORM PET651G (Rev. 08/07)

UNITED STATES PATENT AND TRADEMARK OFFICE

Commissioner for Patents
United States Patent and Trademark Office
P.O. Box 1450
Alexandria, VA 22313-1450
www.uspto.gov

BERENATO, WHITE & STAVISH, LLC
6550 ROCK SPRING DRIVE
SUITE 240
BETHESDA MD 20817

MAY 01 2008

In re Application of: Hussaini, Saied, et al. Application No.: 12/053,844 Filed: March 24, 2008 Title: VIDEO CONSOLE DISPLAY SCREEN/HOUSING AND INTEGRATED SENSING BAR	DECISION ON PETITION TO MAKE SPECIAL FOR NEW APPLICATION UNDER 37 C.F.R. § 1.102 & M.P.E.P. § 708.02

This is a decision on the petition filed on March 24, 2008 to make the above-identified application special for accelerated examination procedure under 37 C.F.R. § 1.102(d).

The petition to make the application special is **DISMISSED**.

REGULATION AND PRACTICE

A grantable petition to make special under 37 C.F.R. § 1.102(d) and pursuant to the "Change to Practice for Petitions in Patent Applications to Make Special and for Accelerated Examination" published in the Federal Register on June 26, 2006 (71 Fed. Reg. 36323), must satisfy the following conditions:

I. Conditions Regarding the Application:

1. the application must be a non-reissue utility or design application filed under 37 CFR 1.111(a);

2. the application, the petition and the required fees must be filed electronically using the USPTO's electronic filing system (EFS), or EFS-web; if not filed electronically, a statement asserting that EFS and EFS-web were not available during the normal business hours.

3. at the time of filing, the application must be complete under 37 CFR 1.51 and in condition for examination;

4. the application must contain three or fewer independent claims and twenty or fewer total claims and the claims must be directed to a single invention.

II. Conditions Regarding the Petition:

The petition must:

1. be filed with the application;

2. include a statement that applicant agrees not to separately argue the patentability of any independent claim during any appeal in the application;

3. include a statement that applicant agrees to make an election without traverse in a telephone interview.

4. include a statement that applicant agrees to conduct such an interview when requested by the examiner.

5. include a statement, made based on a good faith belief, that a preexamination search in compliance with the following requirements, was conducted, including an identification of the field of search by United States class and subclass, where applicable, and for database searches, the search logic or chemical structure or sequence used as a query, the name of the file(s) searched and the database service, and the date of the search.

The preexamination search must:

5.1 involve U.S. patents and patent application publications, foreign patent documents, and non-patent literature, unless the applicant can justify with reasonable certainty that no references more pertinent than those already identified are likely to be found in the eliminated sources and includes such a justification with this statement;

5.2. be directed to the claimed invention and encompass all of the features of the claims, giving the claims the broadest reasonable interpretation;

5.3. encompass the disclosed features that may be claimed.

6. must provide in support of the petition an accelerated examination support document. An accelerated examination support document must include:

6.1. an information disclosure statement (IDS) in compliance with 37 CFR 1.98 citing each reference deemed most closely related to the subject matter of each of the claims;

6.2. an identification of all the limitations in the claims that are disclosed by the reference specifying where the limitation is disclosed in the cited reference;

6.3. a detailed explanation of how each of the claims are patentable over the references cited with particularity required by 37 CFR 1.111(b) and (c);

6.4. a concise statement of the utility of the invention as defined in each of the independent claims (unless the application is a design application);

6.5. a showing of where each limitation of the claims finds support under 35 U.S.C. 112, first paragraph, in the written description of the specification. If applicable, the showing must also identify: (1) each means- (or step) plus-function claim element that invokes consideration under 35 U.S.C. 112, sixth paragraph; and (2) the structure, material, or acts in the specification that corresponds to each means- (or step) plus-function claim element that invokes consideration under 35 U.S.C. 112, sixth paragraph; if the application claims the benefit of one or more applications under title 35, United States Code, the showing must also include where each limitation of the claims finds support under 35 U.S.C. 112, first paragraph, in each such application in which such supports exists;

6.6. an identification of any cited references that may be disqualified under 35 U.S.C. 103(c).

REVIEW OF FACTS

The conditions I: 1-4, II: 1-5, 5.1, 5.3, 6, 6.3, 6.4 and 6.6 above are considered to have been met. However, the petition fails to comply with conditions II: 5.2, 6.1, 6.2, and 6.5 above. Therefore,

the petition fails to meet the required conditions to be accorded special status under the accelerated examination procedure.

Discussion

When referring to "the petition" herein below, the received papers under consideration include the four page PTO/SB/28 form "Petition to Make Special Under Accelerated Examination Program", the "pre-examination search document" including pages 1-3; the "accelerated examination support document" comprising pages 1-11, and an Information Disclosure Statement.

Regarding the requirements of section II element 5.2 outlined above, it appears the search outlined in the petition omitted a critical search area by not searching in the following classes/subclasses:

Videogame housings in general
463/46
206/579
248/917
213/223.1 & 223.2
600/600, 679, 681, 683, 686

Housing details
206/253
439/620.21, 620.23
220/244

Sensing element & control buttons (Note: While a sensing element is claimed, no sensing is ever claimed.)
463/36-37 & 39
398/106

Sound
463/30 & 35

Regarding the requirements of section II element 6.1 outlined above, the IDS fails to comply with 37 C.F.R. 1.98(a)(2)(ii) that requires a legible copy of each document other than a U.S. patent or patent application publication to be filed. The Sensor Bar for Nintendo Wii that is discussed first in the Accelerated Examination Support Document (AESD) on p. 3, is not cited in the IDS, and its copy was not found in the file.

Regarding the requirements of section II element 6.2 outlined above, the petition fails to identify all of the limitations in the application claims that are disclosed in each of the reference(s) and where the limitation is disclosed in each of the cited reference. As stated in the policy published in the Federal Register on June 26, 2006 (71 Fed. Reg. 36323), for each reference cited, the examination support document must include an identification of all the limitations in the claims

that are disclosed by the reference specifying where the limitation is disclosed in the cited reference. The policy statement does not caveat "the independent claims", nor does it allow for grouping and general discussions. A grantable petition must delineate every limitation of every claim and identify where the equivalent limitation is disclosed in each piece of prior art cited on the IDS. As is published on www.uspto.gov/web/patents/accelerated/ in "Guidelines for Applicants under the new accelerated examination procedures"):

> *For each reference cited, the accelerated examination support document must include an identification of all the limitations in the claims that are disclosed by the reference specifying where the limitation is disclosed in the cited reference. Applicants should specify where in each of the cited references the particular claim limitations are found. This process is intended to be analogous to the analysis an examiner uses when locating a relevant prior art reference and then determining whether the reference contains the claimed limitation. For each claimed limitation, the examiner would consider the disclosure of the reference and all reasonable portions in the reference where the limitation is shown. When preparing an Office Action, the examiner would correlate the limitation to the portion of reference which best characterizes the limitation. This part of the AESD is not intended to be an exhaustive listing of every conceivable subjective interpretation of how a claim limitation may read on the reference. Applicants should point out what are considered to be the relevant representations of the limitation in the reference. A limitation may be found in more than one portion of the reference and should be pointed out, yet the intention is not to have applicants point out every conceivable interpretation. The USPTO will adopt a rule of reason when evaluating this portion of the AESD. Unless the representation is so deficient that it would materially effect examination of the application (e.g., numerous instances where the limitations are not shown where applicant states they are), the representation will be deemed to be sufficient for this part of the AESD.*

First, petitioner's submission is not specific enough. Petitioner points out some limitations of some of the claims and provides direction to areas of the prior art where the corresponding limitation may be found. Petitioner does not address each limitation and where it is (or state that it is not) found in each one of the most closely related prior art. The requirement of section II element 6.2 can be satisfied by listing all the presently filed claims (i.e., the claims of the instant application) and by indicating where each limitation of each one of said presently filed claims is taught (or is not taught) in each one of the cited most closely related references, by specifically indicating the element number and/or the relevant page/paragraph and line number(s) or by indicating "(not disclosed)" where appropriate. This one-to-one mapping should be performed individually, with regard to each one of the most closely related prior art that has been cited, one reference at a time.

Regarding the requirements of section II element 6.5 outlined above, the requirements of this section are not met. A grantable petition requires petitioner to provide a showing of where each limitation of the claims finds specific support (i.e., page and line numbers and element number) under 35 U.S.C. 112, first paragraph, in the written description of the specification, and in each application that the present application claims the benefit of domestic priority. The present petition only identifies figures instant application only with respect to all claims as opposed to the required claim limitations. The requirement of section II element 6.5 can be satisfied by

listing all the presently filed claims and by indicating where the instant application (and separately each one of the priority documents – if applicable) teaches each limitation in each one of said presently filed claims, by indicating the element number and/or the relevant page and line numbers. Applicant's attention is also drawn to the requirements relevant under 35 U.S.C 112, 6th paragraph, listed above. Should this requirement not apply to the present application, Applicant should make a statement in this regard.

Applicant's attention is drawn to the statements in p. 11, ll. 1-3 that are believed to be made in error. The instant application contains more than a single claim, and it claims the benefit of provisional application 60/907,984. The claim limitations have to be mapped unto this application as well.

DECISION

For the above-stated reasons, the petition is **dismissed**. The application will therefore be taken up by the examiner for action in its regular turn.

Petitioner is given a single opportunity to perfect the petition. Any request for reconsideration of this decision must be submitted within 1 (one) month or 30 (thirty) days, whichever is longer, (no extension of time under 37 CFR 1.136(a)) from the date of this decision in order to be considered timely. Any request for reconsideration must address all of the deficiencies indicated above.

Petitioner is reminded that, upon granting of the special status of the application on request for reconsideration, the application will be processed expeditiously. However, due to the dismissal of the instant petition, examination may not be completed within twelve months of the filing date of the application.

Any inquiry regarding this decision should be directed to Ehud Gartenberg, TC 3700 Special Programs Examiner, at (571) 272-4828. In his absence, an inquiry can be directed to Colleen P. Cooke, Special Program Examiner, at 571 272-1170.

Ehud Gartenberg

Ehud Gartenberg
Special Programs Examiner
Technology Center 3700

UNITED STATES PATENT AND TRADEMARK OFFICE

Commissioner for Patents
United States Patent and Trademark Office
P.O. Box 1450
Alexandria, VA 22313-1450
www.uspto.gov

BERENATO, WHITE & STAVISH, LLC
6550 ROCK SPRING DRIVE
SUITE 240
BETHESDA MD 20817

JUN 12 2008

In re Application of: Hussaini, Saied, et al. Serial No.: 12/053,844 Filed: March 24, 2008 Title: VIDEO CONSOLE DISPLAY SCREEN/HOUSING AND INTEGRATED SENSING BAR	DECISION ON PETITION TO MAKE SPECIAL FOR NEW APPLICATION UNDER 37 C.F.R. § 1.102 & M.P.E.P. § 708.02

This is a decision on the request for reconsideration filed on June 2, 2008 to make the above-identified application special for accelerated examination procedure under 37 C.F.R. § 1.102(d). The request has been treated as a renewed petition to make the above-identified application special and has been viewed as a supplement to and in combination with the original petition which was filed on March 24, 2008 and dismissed in the Office letter of May 1, 2008.

The petition to make the application special is **DENIED.**

REGULATION AND PRACTICE

A grantable petition to make special under 37 C.F.R. § 1.102(d) and pursuant to the "Change to Practice for Petitions in Patent Applications to Make Special and for Accelerated Examination" published in the Federal Register on June 26, 2006 (71 Fed. Reg. 36323), must satisfy the conditions as outlined in the prior petition decision. The conditions are not repeated herein.

REVIEW OF FACTS

As stated in the decision of May 1, 2008 conditions I: 1-4, II: 1-5, 5.1 5.3, 6, 6.1-6.4 and 6.6 were considered to have been met. However, the petition failed to comply with conditions II: 5.2 and 5.2, 6.1, 6.2 and 6.5. Upon reconsideration, the petition is considered to additionally meet II: 5.2 and 6.1. However, the petition still fails to meet the requirement of section II: 6.2 and 6.5. Therefore, the petition fails to meet the required conditions to be accorded special status under the accelerated examination procedure.

DISCUSSION

In the dismissal of the petition dated May 1, 2008, the Examiner noted that with regard to the requirement of section element 6.2: "First, petitioner's submission is not specific enough.

Petitioner points out some limitations of some of the claims and provides direction to areas of the prior art where the corresponding limitation may be found. Petitioner does not address each limitation and where it is (or state that it is not) found in each one of the most closely related prior art. The requirement of section II element 6.2 can be satisfied by listing all the presently filed claims (i.e., the claims of the instant application) and by indicating where each limitation of each one of said presently filed claims is taught (or is not taught) in each one of the cited most closely related references, by specifically indicating the element number and/or the relevant page/paragraph and line number(s) or by indicating "(not disclosed)" where appropriate. This one-to-one mapping should be performed individually, with regard to each one of the most closely related prior art that has been cited, one reference at a time." In the request for reconsideration, Applicant bundled limitations together, thus failing to satisfy the requirement for specificity. For example: with respect to the mapping unto Hussaini et al., D 477,850, applicant states on p. 30 of the AESD:

"Hussaini et al. (US D 477,850):

Claim 1: A portable video display unit comprising:

a cage-type casing adapted for removably housing and positively retaining an electronic video game console therein (not disclosed); and

.....

said cage-type casing including an audio/video connector and a power connector provided inside said cage-type casing and adapted to engage complementary audio/video and power connectors of said electronic video game console (not disclosed); "

Hussaini shows on the face of the patent and in Fig. 8 the design shown on the next page. The design comprises a base in form of a cage, a display that pivots down to close in the cavity of the cage, and several clearly shown connectors. At the very least, Applicant should have mapped the claimed limitations as in the following example:

a cage-type casing (base in Fig. 8).....

.....

said cage-type casing (base in Fig. 8) including an audio/video connector and a power connector (connectors shown inside the base, but type is undisclosed).

It is again reminded that each limitation has to be mapped unto the prior art or labeled "(not disclosed)" and that bundling together limitations as it was done in the present petition does not meet the requirements of the Accelerated Examination program.

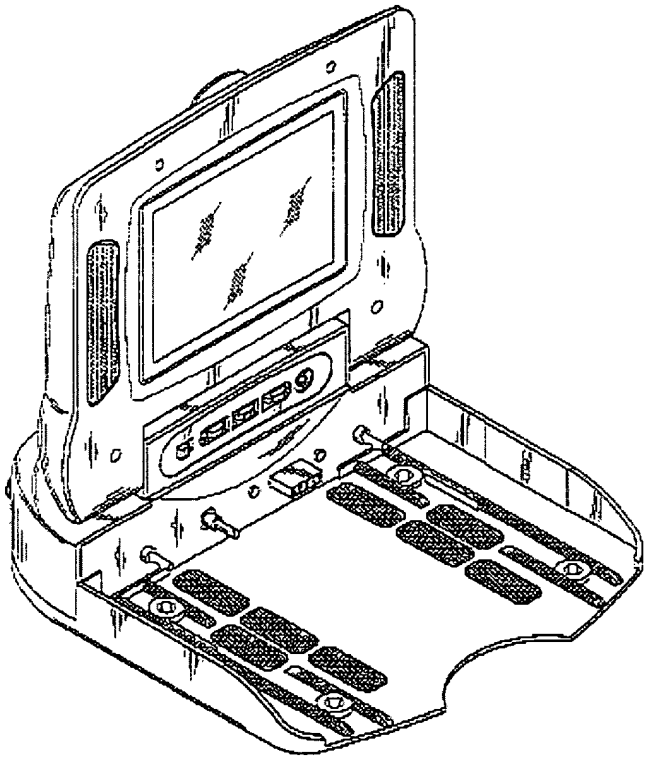

Similarly, with respect to the requirements of section II: element 6.5, the mapping lacks the required specificity as detailed in the dismissal of the petition: "The requirement of section II element 6.5 can be satisfied by listing all the filed claims and by indicating where the application and the application(s) for which priority is claimed teach <u>each limitation</u> in each one of said filed claims, by indicating the element number and/or the relevant page and line numbers. Applicant's attention is also drawn to the requirements relevant under 35 U.S.C 112, 6th paragraph, listed above. Should this requirement not apply to the present application, Applicant should make a statement in this regard." As an example of failing to meet this requirement, Applicant's attention is drawn to AESD p. 36 where he states:

"Regarding claim 1: A portable video display unit comprising:

a cage-type casing adapted-for removably housing and positively retaining an electronic video game console therein, said cage-type casing defining an enclosed cavity there within substantially complementary to said electronic video game console, said casing having a substantially flat top surface and an access opening for receiving said electronic video game console in said cavity (page 2, lines 19-23; page 4, lines 17-18 and page 5, lines 4-5; Figs. 1-9);"

The bundling of limitations is defying the purpose of the mapping, in particular because "a cage-type casing" is argued by the Applicant as being a limitation that defines the claimed invention over the prior art (see patentability arguments under section II: element 6.3). A more appropriate mapping would have been, e.g.,

... a cage-type casing (7, p. 4, l. 18 and Figs 2-4, 6, 8, and 9) ...

DECISION

For at least the above-stated reason (for failing to meet the specificity requirement of section II: elements 6.2 and 6.5), the petition is **DENIED**. The application will remain in its regular status and will be taken up by the examiner for action in its regular turn.

Petitioner is reminded that a single opportunity to perfect the petition is given. Therefore, further petitions for accelerated examination in this application will not be entertained.

Any inquiry regarding this decision should be directed to Ehud Gartenberg, TC 3700 Special Program Examiner, at (571) 272-4828. In his absence, an inquiry can be directed to J. Harrison, Special Program Examiner, at 571 272-4449.

Ehud Gartenberg

Ehud Gartenberg
Special Program Examiner
Technology Center 3700

UNITED STATES PATENT AND TRADEMARK OFFICE

Commissioner for Patents
United States Patent and Trademark Office
P.O. Box 1450
Alexandria, VA 22313-1450
www.uspto.gov

NOVA Chemicals Inc.
Westpointe Center
1550 Coraopolis Heights Road
Moon Township PA 15108

COPY MAILED
SEP 15 2008

In re Application of	:	
Louis Hayward, Christopher Griffin and Paul Arch	:	DECISION GRANTING STATUS UNDER 37 CFR 1.47(a)
Application No. 12/053,849	:	
Filed: March 24, 2008	:	
Attorney Docket No. 2007 004 USA-NONP		

This is in response to the petition under 37 CFR 1.47(a), filed July 11, 2008.

The petition is **GRANTED.**

Petitioner has shown that the non-signing inventor Haywood has refused to join in the filing of the above-identified application.

The application and papers have been reviewed and found in compliance with 37 CFR 1.47(a). This application is hereby accorded Rule 1.47(a) status.

As provided in 37 CFR 1.47(c), this Office will forward notice of this application's filing to the non-signing inventor at the address given in the petition. Notice of the filing of this application will also be published in the Official Gazette.

The address provided in the declaration is presumed to be non-signing inventor's last known address. If this is not correct, petitioner is obligated to inform the Office.

This application is being referred to the Office of Patent Application processing for pre-examination processing.

Telephone inquiries regarding this decision should be directed to the undersigned at (571) 272-3215.

Charlema Grant
Petitions Attorney
Office of Petitions

UNITED STATES PATENT AND TRADEMARK OFFICE

Commissioner for Patents
United States Patent and Trademark Office
P.O. Box 1450
Alexandria, VA 22313-1450
www.uspto.gov

Louis G. Hayward
602 Strand Street
Carlsbad, CA 92011

COPY MAILED
SEP 15 2008

In re Application of
Louis Hayward, Christopher Griffin and Paul Arch
Application No. 12/053,849
Filed: March 24, 2008
Attorney Docket No. 2007 004 USA-NONP

Dear Mr. Hayward:

You are named as a co- inventor in the above-identified United States patent application, filed under the provisions of 35 U.S.C. 116 (United States Code), and 37 CFR 1.47(a), Rules of Practice in Patent Cases. Should a patent be granted on the application you will be designated therein as a co- inventor.

As a named inventor you are entitled to inspect any paper in the file wrapper of the application, order copies of all or any part thereof (at a prepaid cost per 37 CFR 1.19) or make your position of record in the application. Alternatively, you may arrange to do any of the preceding through a registered patent attorney or agent presenting written authorization from you. If you care to join the application, counsel of record (see below) would presumably assist you. Joining the application would entail the filing of an appropriate oath or declaration by you pursuant to 37 CFR 1.63.

Telephone inquiries regarding this communication should be directed to Charlema Grant at (571) 272-3215. Requests for information regarding your application should be directed to the File Information Unit at (703) 308-2733. Information regarding how to pay for and order a copy of the application, or a specific paper in the application, should be directed to the Certification Division at (571) 272-3150 or 1 (800) 972-6382 (outside the Washington, DC area).

Charlema Grant

Charlema Grant
Petitions Attorney
Office of Petitions

cc: NOVA Chemicals Inc.
Westpointe Center
1550 Coraopolis Heights Road
Moon Township PA 15108
ATTN: Gary F. Matz

UNITED STATES PATENT AND TRADEMARK OFFICE

Commissioner for Patents
United States Patent and Trademark Office
P.O. Box 1450
Alexandria, VA 22313-1450
www.uspto.gov

STEIN MCEWEN, LLP
1400 EYE STREET, NW
SUITE 300
WASHINGTON DC 20005

MAILED

JUL 01 2010

OFFICE OF PETITIONS

In re Application of	:	
Chang-Ho Lee et al	:	
Application No. 12/053,900	:	DECISION GRANTING PETITION
Filed: March 24, 2008	:	UNDER 37 CFR 1.313(c)(2)
Attorney Docket No. 0096.1071	:	

This is a decision on the petition under 37 CFR 1.313(c)(2), filed June 30, 2010, to withdraw the above-identified application from issue after payment of the issue fee.

The petition is **GRANTED**.

The above-identified application is withdrawn from issue for consideration of a submission under 37 CFR 1.114 (request for continued examination). *See* 37 CFR 1.313(c)(2).

Petitioner is advised that the issue fee paid on May 26, 2010 cannot be refunded. If, however, this application is again allowed, petitioner may request that it be applied towards the issue fee required by the new Notice of Allowance.[1]

Telephone inquiries should be directed to the undersigned at (571) 272-3208.

This application is being referred to Technology Center AU 2814 for processing of the request for continued examination under 37 CFR 1.114 and for consideration of the concurrently filed IDS.

/Karen Creasy/
Karen Creasy
Petitions Examiner
Office of Petitions

---

[1] *The request to apply the issue fee to the new Notice may be satisfied by completing and returning the new Part B – Fee(s) Transmittal Form (along with any balance due at the time of submission). Petitioner is advised that the Issue Fee Transmittal Form must be completed and timely submitted to avoid abandonment of the application.*

UNITED STATES PATENT AND TRADEMARK OFFICE

Commissioner for Patents
United States Patent and Trademark Office
P.O. Box 1450
Alexandria, VA 22313-1450
www.uspto.gov

FOLEY & LARDNER LLP
150 EAST GILMAN STREET
P.O. BOX 1497
MADISON WI 53701-1497

COPY MAILED
SEP 09 2008
OFFICE OF PETITIONS

In re Application of
Najafi, et al. : ON PETITION
Application No.: 12/053,914 :
Filed: March 24, 2008 :
Attorney Docket No.: 088245-4096 :
For: SYSTEM AND METHOD FOR WLAN SIGNAL STRENGTH DETERMINATION

This is a decision on the petition under 37 CFR 1.47(a), filed July 14, 2008.

The petition is **DISMISSED**.

Any request for reconsideration of this decision must be submitted within TWO (2) MONTHS from the mail date of this decision. Extensions of time under 37 CFR 1.136(a) are permitted. Any response should be entitled "Request for Reconsideration of Petition Under 37 CFR 1.47(a)" and may include an oath or declaration executed by the inventor. **Failure to respond will result in abandonment of the application.**

A grantable petition under 37 CFR 1.47(a) requires:

(1) a petition including proof of the pertinent facts establishing that the joint inventor(s) refuses to join, or cannot be found or reached after diligent effort,
(2) a proper oath or Declaration executed by the available joint inventor(s),
(3) the petition fee of $200, and
(4) the last known address of the omitted inventor(s).

This petition lacks item (2) above.

As to item (2), an oath or declaration for the patent application in compliance with 37 CFR 1.63 and 1.64 still has not been presented. The declaration contains a nondated alteration to information for Inventor. 37 CFR 1.52(c) states that "[a]ny interlineation, erasure, cancellation or other alteration of the application papers filed should be made on or before the signing of the accompanying oath or declaration pursuant to 1.63...." This includes the oath or declaration. The

Office will not consider whether noninitialed and/or nondated alterations were made before or after signing of the oath or declaration but will require a new oath or declaration. MPEP 605.04(a)

Fortunately, the alteration is to information for a signing inventor. Thus, pursuant to 37 CFR 1.67(a)(2), Inventor Wang can correct his information in a supplemental declaration identifying the entire inventive entity and their information, but signed only by him.

An oath or declaration in compliance with 37 CFR 1.63 and1.64 signed by the Rule 1.47 applicant on behalf of the non-signing inventor is REQUIRED. See MPEP 409.03(a).

Further correspondence with respect to this matter should be addressed as follows:

By mail: Mail Stop PETITION
Commissioner for Patents
Post Office Box 1450
Alexandria, VA 22313-1450

By hand: U.S. Patent and Trademark Office
Customer Service Window, Mail Stop Petition
Randolph Building
401 Dulany Street
Alexandria, VA 22314

By FAX: (571) 273-8300 - ATTN: Office of Petitions

Telephone inquiries should be directed to the undersigned at (571) 272-3230.

Shirene Willis Brantley
Senior Petitions Attorney
Office of Petitions

UNITED STATES PATENT AND TRADEMARK OFFICE

Commissioner for Patents
United States Patent and Trademark Office
P.O. Box 1450
Alexandria, VA 22313-1450
www.uspto.gov

FOLEY & LARDNER LLP
150 EAST GILMAN STREET
P.O. BOX 1497
MADISON WI 53701-1497

COPY MAILED

DEC 0 5 2008

OFFICE OF PETITIONS

In re Application of
Najafi, et al.
Application No.: 12/053,914
Filed: March 24, 2008
Attorney Docket No.: 088245-4096
For: SYSTEM AND METHOD FOR WLAN SIGNAL STRENGTH DETERMINATION

ON PETITION

This is in response to the reconsideration petition under 37 CFR 1.47(a), filed November 7, 2008.

The petition is **GRANTED.**

Petitioner has shown that the non-signing inventor, Hamid Najafi, cannot be located to join in the filing of the above-identified application.

The application and papers have been reviewed and found in compliance with 37 CFR 1.47(a). This application is hereby accorded Rule 1.47(a) status.

As provided in 37 CFR 1.47(c), this Office will forward notice of this application's filing to the non-signing inventor at the address given in the petition. Notice of the filing of this application will also be published in the Official Gazette.

This application is being referred to the Office of Patent Application Processing for pre-examination processing.

Telephone inquiries should be directed to the undersigned at (571) 272-3230.

Shirene Willis Brantley
Senior Petitions Attorney
Office of Petitions

UNITED STATES PATENT AND TRADEMARK OFFICE

Commissioner for Patents
United States Patent and Trademark Office
P.O. Box 1450
Alexandria, VA 22313-1450
www.uspto.gov

HAMID NAJAFI
26645 ALTAMONT RD. #11
LOS ALTOS HILLS, CA 94022-4320

COPY MAILED
DEC 05 2008
OFFICE OF PETITIONS

In re Application of
Najafi, et al. : LETTER
Application No.: 12/053,914 :
Filed: March 24, 2008 :
Attorney Docket No.: 088245-4096 :
For: SYSTEM AND METHOD FOR WLAN SIGNAL STRENGTH DETERMINATION

Dear Mr. Najafi:

You are named as a joint inventor in the above-identified United States patent application, filed under the provisions of 35 U.S.C. 116 (United States Code), and 37 CFR 1.47(a), Rules of Practice in Patent Cases. Should a patent be granted on the application you will be designated therein as a joint inventor.

As a named inventor you are entitled to inspect any paper in the file wrapper of the application, order copies of all or any part thereof (at a prepaid cost per 37 CFR 1.19) or make your position of record in the application. Alternatively, you may arrange to do any of the preceding through a registered patent attorney or agent presenting written authorization from you. If you care to join the application, counsel of record (see below) would presumably assist you. Joining the application would entail the filing of an appropriate oath or declaration by you pursuant to 37 CFR 1.63.

Telephone inquiries regarding this communication should be directed to the undersigned at (571) 272-3230. Requests for information regarding your application should be directed to the File Information Unit at (703) 308-2733. Information regarding how to pay for and order a copy of the application, or a specific paper in the application, should be directed to the Certification Division at (571) 272-3150 or 1 (800) 972-6382 (outside the Washington, DC area).

Shirene Willis Brantley
Shirene Willis Brantley
Senior Petitions Attorney
Office of Petitions

ATTORNEYS OF RECORD: FOLEY & LARDNER LLP
150 EAST GILMAN STREET
P.O. BOX 1497
MADISON WI 53701-1497

UNITED STATES PATENT AND TRADEMARK OFFICE

UNITED STATES DEPARTMENT OF COMMERCE
United States Patent and Trademark Office
Address: COMMISSIONER FOR PATENTS
P.O. Box 1450
Alexandria, Virginia 22313-1450
www.uspto.gov

COATS & BENNETT, PLLC
1400 Crescent Green, Suite 300
Cary, NC 27518

Mail Date: 04/21/2010

Applicant	: Dennis L. Mast	: DECISION ON REQUEST FOR
Patent Number	: 7631615	: RECALCULATION of PATENT
Issue Date	: 12/15/2009	: TERM ADJUSTMENT IN VIEW
Appliction No	: 12/053,928	: OF WYETH AND NOTICE OF INTENT TO
Filed	: 03/24/2008	: ISSUE CERTIFICATE OF CORRECTION
		:

The Request for Recalculation is **GRANTED** to the extent indicated.

The patent term adjustment has been determined to be **127** days. The USPTO will *sua sponte* issue a certificate of correction reflecting the amount of PTA days determined by the recalculation.

Prior to the issuance of the certificate of correction, the USPTO will afford patentee an opportunity to be heard and request reconsideration. Accordingly, patentee has **one month or thirty (30) days**, whichever is longer, to file a request for reconsideration of this patent term adjustment calculation. See 35 U.S.C. 154(b)(3)(B)(ii) and 37 CFR 1.322(a)(4). No extensions of time will be granted under 37 CFR 1.136.

Patentee should use document code PET.OP if electronically filing a request for reconsideration of this patent term adjustment calculation. The patentee must also include the information required by 37 CFR 1.705(b)(2) and the fee required by 37 CFR 1.18(e). If patentee does not file a timely request for reconsideration of this patent term adjustment calculation including the information required by 37 CFR 1.705(b)(2) and the fee required by 37 CFR 1.18(e), the USPTO will issue a certificate of correction reflecting the PTA determination noted above.

Patentee should be aware that in order to preserve the right to review in the United States District Court for the District of Columbia of the USPTO patent term adjustment determination, patentee must ensure that he or she also take the steps required under 35 U.S.C. 154(b)(4)(A) in a timely manner. Nothing in the request for recalculation should be construed as providing an alternative time frame for commencing a civil action under 35 U.S.C. 154(b)(4)(A).

Any questions concerning this decision should be directed to the Office of Patent Legal Administration at 571-272-7702.

UNITED STATES PATENT AND TRADEMARK OFFICE

UNITED STATES DEPARTMENT OF COMMERCE
United States Patent and Trademark Office
Address: COMMISSIONER FOR PATENTS
P.O. Box 1450
Alexandria, Virginia 22313-1450
www.uspto.gov

MCANDREWS HELD & MALLOY, LTD
500 WEST MADISON STREET
SUITE 3400
CHICAGO, IL 60661

Mail Date: 04/28/2010

Applicant	: Oscar E. Agazzi	: DECISION ON REQUEST FOR
Patent Number	: 7634001	: RECALCULATION of PATENT
Issue Date	: 12/15/2009	: TERM ADJUSTMENT IN VIEW
Application No	: 12/053,935	: OF WYETH AND NOTICE OF INTENT TO
Filed	: 03/24/2008	: ISSUE CERTIFICATE OF CORRECTION
		:

The Request for Recalculation is **GRANTED** to the extent indicated.

The patent term adjustment has been determined to be **0** days. The USPTO will *sua sponte* issue a certificate of correction reflecting the amount of PTA days determined by the recalculation.

Prior to the issuance of the certificate of correction, the USPTO will afford patentee an opportunity to be heard and request reconsideration. Accordingly, patentee has **one month or thirty (30) days**, whichever is longer, to file a request for reconsideration of this patent term adjustment calculation. See 35 U.S.C. 154(b)(3)(B)(ii) and 37 CFR 1.322(a)(4). No extensions of time will be granted under 37 CFR 1.136.

Patentee should use document code PET.OP if electronically filing a request for reconsideration of this patent term adjustment calculation. The patentee must also include the information required by 37 CFR 1.705(b)(2) and the fee required by 37 CFR 1.18(e). If patentee does not file a timely request for reconsideration of this patent term adjustment calculation including the information required by 37 CFR 1.705(b)(2) and the fee required by 37 CFR 1.18(e), the USPTO will issue a certificate of correction reflecting the PTA determination noted above.

Patentee should be aware that in order to preserve the right to review in the United States District Court for the District of Columbia of the USPTO patent term adjustment determination, patentee must ensure that he or she also take the steps required under 35 U.S.C. 154(b)(4)(A) in a timely manner. Nothing in the request for recalculation should be construed as providing an alternative time frame for commencing a civil action under 35 U.S.C. 154(b)(4)(A).

Any questions concerning this decision should be directed to the Office of Patent Legal Administration at 571-272-7702.

UNITED STATES PATENT AND TRADEMARK OFFICE

UNITED STATES DEPARTMENT OF COMMERCE
United States Patent and Trademark Office
Address: COMMISSIONER FOR PATENTS
P.O. Box 1450
Alexandria, Virginia 22313-1450
www.uspto.gov

APPLICATION NO.	FILING DATE	FIRST NAMED INVENTOR	ATTORNEY DOCKET NO.	CONFIRMATION NO.
12/054,011	03/24/2008	Hung M. Pham	0315-000679	5347

27572 7590 07/21/2010
HARNESS, DICKEY & PIERCE, P.L.C.
P.O. BOX 828
BLOOMFIELD HILLS, MI 48303

EXAMINER
NORMAN, MARC E

ART UNIT	PAPER NUMBER
3744	

MAIL DATE	DELIVERY MODE
07/21/2010	PAPER

Please find below and/or attached an Office communication concerning this application or proceeding.

The time period for reply, if any, is set in the attached communication.

UNITED STATES PATENT AND TRADEMARK OFFICE

Commissioner for Patents
United States Patent and Trademark Office
P.O. Box 1450
Alexandria, VA 22313-1450
www.uspto.gov

HARNESS, DICKEY & PIERCE, P.L.C.
P.O. BOX 828
BLOOMFIELD HILLS MI 48303

In re Application of	:	
PHAM, HUNG M.	:	DECISION ON REQUEST TO
Application No. 12/054,011	:	PARTICIPATE IN PATENT
Filed: March 24, 2008	:	PCT/PROSECUTION HIGHWAY
Attorney Docket No. 0315-000679	:	PROGRAM AND PETITION
For: REFRIGERATION MONITORING SYSTEM AND METHOD	:	37 CFR 1.102(d)

This is a decision on the renewed request to participate in the Patent Prosecution Highway (PPH) program and the petition under 37 CFR 1.102(d), filed July 20, 2010 to make the above-identified application special.

The request and petition are GRANTED.

A grantable request to participate in the PPH program and petition to make special require:
(1) The U.S. application must disclose an eligible relationship to one or more PCT applications filed in the JPO, EPO, KIPO or USPTO;
(2) Applicant must submit a copy of the allowable/patentable claim(s) from the PCT application(s) latest international work product (the written opinion or the IPER) along with an English translation thereof and a statement that the English translation is accurate;
(3) All the claims in the U.S. application must sufficiently correspond or be amended to sufficiently correspond to the allowable/patentable claim(s) in the PCT application(s);
(4) Examination of the U.S. application has not begun;
(5) Applicant must submit a copy of the latest international work product from the PCT application containing the allowable/patentable claim(s) along with an English translation thereof and a statement that the English translation is accurate; and
(6) Applicant must submit an IDS listing the documents cited by the PCT examiner in the international work product along with copies of documents except U.S. patents or U.S. patent application publications.

In light of the petition being properly submitted, the request to participate in the PPH program and the petition comply with the above requirements. Accordingly, the above-identified application has been accorded "special" status.

The applicant is encouraged to cite and submit all relevant prior art references, if any, to facilitate examination in this application.

All other inquiries concerning the examination or status of the application should be directed to Frantz Jules, the SPE of Art Unit 3744, and 571-272-6681 for Class 062/129 and also accessible in the PAIR system at http://www.uspto.gov/ebc.index.html.

All other inquiries concerning the examination or status of the application should be directed to the Patent Application Information Retrieval (PAIR) system.

The application will be docketed to an examiner for action on the merits commensurate with this decision.

Telephone inquiries concerning this decision should be directed to Henry C. Yuen, at 571-272-4856.

The petition is **granted.**

/Henry C. Yuen/

Henry C. Yuen, Special Programs Examiner
Technology Center 3700 – Mechanical Engineering,
Manufacturing and Products
571-272-4856

UNITED STATES PATENT AND TRADEMARK OFFICE

Commissioner for Patents
United States Patent and Trademark Office
P.O. Box 1450
Alexandria, VA 22313-1450
www.uspto.gov

TRIANGLE PATENTS, P.L.L.C.
P.O. BOX 28539
RALEIGH NC 27611-8539

COPY MAILED

DEC 0 2 2009

OFFICE OF PETITIONS

In re Application of	:	
Williams, Ella J.	:	DECISION ON PETITION
Application No. 12/054,036	:	TO WITHDRAW
Filed: March 24, 2008	:	FROM RECORD
Attorney Docket No. 4014-003	:	

This is a decision on the Request to Withdraw as attorney or agent of record under 37 C.F.R. § 1.36(b), filed September 9, 2009.

The request is **APPROVED**.

A grantable request to withdraw as attorney/agent of record must be signed by every attorney/agent seeking to withdraw or contain a clear indication that one attorney is signing on behalf of another/others. The Office will require the practitioner(s) to certify that he, she or they have: (1) given reasonable notice to the client, prior to the expiration of the reply period, which the practitioner(s) intends to withdraw from employment; (2) delivered to the client or a duly authorized representative of the client all papers and property (including funds) to which the client is entitled; and (3) notified the client of any replies that may be due and the time frame within which the client must respond, pursuant to 37 CFR 10.40 (c).

The request was signed by JiNan Glasgow on behalf of all attorneys/agents of record who are associated with Customer Number 64843.

All attorneys/agents associated with Customer Number 64843 have been withdrawn. Applicant(s) is/are reminded that there is no attorney of record at this time.

All future correspondence will be directed to first-named inventor, Ella J. Williams, at the address indicated below.

Telephone inquires concerning this decision should be directed to the undersigned at (571) 272-3206. All other inquires concerning either the examination or status of the application should be directed to the Technology Center.

Liana Walsh
Petitions Examiner
Office of Petitions

cc: ELLA J. WILLIAMS
2376 JEFFERSON STREET
GARY, IN 46407

UNITED STATES PATENT AND TRADEMARK OFFICE

Commissioner for Patents
United States Patent and Trademark Office
P.O. Box 1450
Alexandria, VA 22313-1450
www.uspto.gov

DORITY & MANNING, P.A.
POST OFFICE BOX 1449
GREENVILLE, SC 29602-1449

MAILED

JUN 22 2009

OFFICE OF PETITIONS

In re Application of
William F. GINDER
Application No. 12/054,042
Filed: March 24, 2008
Attorney Docket No. **GWZ-12-CON**

DECISION ON PETITION TO WITHDRAW FROM RECORD

This is a decision on the Request to Withdraw as attorney or agent of record under 37 C.F.R. § 1.36(b), filed March 4, 2009.

The request is **APPROVED**.

A grantable request to withdraw as attorney/agent of record must be signed by every attorney/agent seeking to withdraw or contain a clear indication that one attorney is signing on behalf of another/others.

The request was signed by Rodney K. E. Mintz. Rodney K. E. Mintz has been withdrawn as attorney or agent of record; all other attorneys remain of record.

The correspondence address of record remains unchanged. The response to the non-final office action mailed on March 24, 2009 has been entered and forwarded to examiner Melanie T. Williams.

Telephone inquiries regarding the status or examination of this application should be directed to the examiner.

Inquiries concerning this decision should be directed to the undersigned at 571-272-7253.

/Monica A. Graves/
Petitions Examiner, Office of Petitions

UNITED STATES PATENT AND TRADEMARK OFFICE

Commissioner for Patents
United States Patent and Trademark Office
P.O. Box 1450
Alexandria, VA 22313-1450
www.uspto.gov

HOLLAND & BONZAGNI, P.C.
171 DWIGHT ROAD, SUITE 302
LONGMEADOW MA 01106-1700

COPY MAILED

MAR 02 2009

OFFICE OF PETITIONS

In re Application of	:	
PRESZ JR., Walter M. et al.	:	
Application No. 12/054,050	:	DECISION ON PETITION
Filed: March 24, 2008	:	TO WITHDRAW
Attorney Docket No. **08023P**	:	FROM RECORD
	:	

This is a decision on the renewed Request to Withdraw as attorney or agent of record under 37 C.F.R. § 1.36(b), filed December 09, 2008.

The request is **NOT APPROVED**.

A grantable request to withdraw as attorney/agent of record must be signed by every attorney/agent seeking to withdraw or contain a clear indication that one attorney is signing on behalf of another/others. The Office requires the practitioner(s) requesting withdrawal to certify that he, she, or they have: (1) given reasonable notice to the client, prior to the expiration of the response period, that the practitioner(s) intends to withdraw from employment; (2) delivered to the client or a duly authorized representative of the client all papers and property (including funds) to which the client is entitled; and (3) notified the client of any responses that may be due and the time frame within which the client must respond, pursuant 37 CFR 10.40(c).

The request cannot be approved because there is no indication that all of the acts noted in the above-identified certifications have been performed. Items one (1) and two (2) of the above certifications have not been certified.

All future communications from the Office will continue to be directed to the above-listed address until otherwise notified by applicant.

Telephone inquiries concerning this decision should be directed to Michelle R. Eason at 571-272- 4231.

Michelle R. Eason
Paralegal Specialist
Office of Petitions

Cc: **WALTER M. PRESZ, JR**
FLODESIGN WIND TURBINE CORPORATION
380 MAIN STREET
WILBRAHAM, MA 01095

UNITED STATES PATENT AND TRADEMARK OFFICE

Commissioner for Patents
United States Patent and Trademark Office
P.O. Box 1450
Alexandria, VA 22313-1450
www.uspto.gov

HOLLAND & BONZAGNI, P.C.
171 DWIGHT ROAD, SUITE 302
LONGMEADOW, MA 01106-1700

MAILED

MAR 3 1 2009

OFFICE OF PETITIONS

In re Application of	:	
PRESZ JR., Walter M. et al.	:	
Application No. 12/054,050	:	DECISION ON PETITION
Filed: March 24, 2008	:	TO WITHDRAW
Attorney Docket No. **FLOD 2 00003**	:	FROM RECORD
	:	

This is a decision on the renewed Request to Withdraw as attorney or agent of record under 37 C.F.R. § 1.36(b), filed March March 09, 2009.

The request is **NOT APPROVED** because it is moot.

A review of the file record indicates that the power of attorney to Holland & Bonzagni, P.C. has been revoked by the applicant of the patent application on March 18, 2009. Accordingly, the request to withdraw under 37 C.F.R. § 1.36(b) is moot.

All future communications from the Office will continue to be directed to the below-listed address until otherwise notified by applicant.

Telephone inquires concerning this decision should be directed to Michelle R. Eason at 571-272-4231.

Michelle R. Eason
Paralegal Specialist
Office of Petitions

cc: **FAY SHARPE LLP**
1228 EUCLID AVENUE, 5TH FLOOR
THE HALLE BUILDING
CLEVELAND OH 44115

UNITED STATES PATENT AND TRADEMARK OFFICE

Commissioner for Patents
United States Patent and Trademark Office
P.O. Box 1450
Alexandria, VA 22313-1450
www.uspto.gov

MOSER IP LAW GROUP / VONAGE HOLDINGS CORP .
1030 BROAD STREET
2ND FLOOR
SHREWSBURY NJ 07702

COPY MAILED
SEP 15 2008

In re Application of	:	
John Mathews, Vishal Patel, Nirav Kadakia	:	DECISION GRANTING STATUS
and Adam Tistler	:	UNDER 37 CFR 1.47(a)
Application No. 12/054.055	:	
Filed: March 24, 2008	:	
Attorney Docket No. V017		

This is in response to the petition under 37 CFR 1.47(a), filed July 7, 2008.

The petition is **GRANTED.**

Petitioner has shown that the non-signing inventor cannot be located to join in the filing of the above-identified application.

The application and papers have been reviewed and found in compliance with 37 CFR 1.47(a). This application is hereby accorded Rule 1.47(a) status.

As provided in 37 CFR 1.47(c), this Office will forward notice of this application's filing to the non-signing inventor at the address given in the petition. Notice of the filing of this application will also be published in the Official Gazette.

The address given on the petition differs from the address of record. If appropriate, a change of address should be filed in accordance with MPEP 601.03. A courtesy copy of this decision is being mailed to the address given on the petition. However, the Office will mail all future correspondence solely to the address of record.

This application is being referred to the Office of Patent Application Processing for pre-examination processing.

Telephone inquiries regarding this decision should be directed to the undersigned at (571) 272-3215.

Charlema Grant
Petitions Attorney
Office of Petitions

Best Available Copy

UNITED STATES PATENT AND TRADEMARK OFFICE

Commissioner for Patents
United States Patent and Trademark Office
P.O. Box 1450
Alexandria, VA 22313-1450
www.uspto.gov

Adam Tistler
207 Highwood Avenue
Apt # 6
Ridgewood, NJ 07450

COPY MAILED
SEP 15 2008

In re Application of
John Mathews, Vishal Patel, Nirav Kadakia and Adam Tistler
Application No. 12/054.055
Filed: March 24, 2008
Attorney Docket No. V017

Dear Tistler:

You are named as a joint inventor in the above-identified United States patent application, filed under the provisions of 35 U.S.C. 116 (United States Code), and 37 CFR 1.47(a), Rules of Practice in Patent Cases. Should a patent be granted on the application you will be designated therein as a joint inventor.

As a named inventor you are entitled to inspect any paper in the file wrapper of the application, order copies of all or any part thereof (at a prepaid cost per 37 CFR 1.19) or make your position of record in the application. Alternatively, you may arrange to do any of the preceding through a registered patent attorney or agent presenting written authorization from you. If you care to join the application, counsel of record (see below) would presumably assist you. Joining the application would entail the filing of an appropriate oath or declaration by you pursuant to 37 CFR 1.63.

Telephone inquiries regarding this communication should be directed to the undersigned at (571) 272-3215. Requests for information regarding your application should be directed to the File Information Unit at (703) 308-2733. Information regarding how to pay for and order a copy of the application, or a specific paper in the application, should be directed to the Certification Division at (571) 272-3150 or 1 (800) 972-6382 (outside the Washington, DC area).

Charlema Grant

Charlema Grant
Petitions Attorney
Office of Petitions

cc: MOSER IP LAW GROUP / VONAGE HOLDINGS CORP.
1030 BROAD STREET
2ND FLOOR
SHREWSBURY NJ 07702

UNITED STATES PATENT AND TRADEMARK OFFICE

UNITED STATES DEPARTMENT OF COMMERCE
United States Patent and Trademark Office
Address: COMMISSIONER FOR PATENTS
P.O. Box 1450
Alexandria, Virginia 22313-1450
www.uspto.gov

APPLICATION NO.	FILING DATE	FIRST NAMED INVENTOR	ATTORNEY DOCKET NO.	CONFIRMATION NO.
12/054,073	03/24/2008	Yeong-Moon SON	0201-0126	5440

7590 06/11/2010

Jefferson IP Law, LLP
1130 Connecticut Ave., NW
Suite 420
Washington, DC 20036

EXAMINER
FEILD, LYNN DIANA

ART UNIT	PAPER NUMBER
2400	

MAIL DATE	DELIVERY MODE
06/11/2010	PAPER

DECISION GRANTING PETITION UNDER 37 CFR 1.138(d)

The declaration of express abandonment is recognized

This is in response to the petition under 37 CFR 1.138(d), requesting for a refund of any previously paid search fee and excess claims fee in the above-identified application.

The petition is granted.

The express abandonment is recognized. Any previously paid search fee and excess claims fee are hereby refunded.

Telephone inquiries should be directed to the Office of Data Management at (571) 272-4200.

Nimi Farmes

Patent Publication Branch
Office of Data Management

Refund Ref:
06/14/2010 [illegible]

Credit Card Refund Total: [illegible]

[illegible]

Adjustment date: 06/14/2010 NFARMER
[illegible] INTEFSW [illegible]
[illegible] FC:1111 -510.00 [illegible]
[illegible] FC:1[illegible] -50.00 [illegible]

FORM PET651G (Rev. 08/07)

UNITED STATES PATENT AND TRADEMARK OFFICE

Commissioner for Patents
United States Patent and Trademark Office
P.O. Box 1450
Alexandria, VA 22313-1450
www.uspto.gov

SPANSION LLC C/O MURABITO, HAO &
BARNES LLP
TWO NORTH MARKET STREET
THIRD FLOOR
SAN JOSE, CA 95113

MAILED

NOV 09 2009

OFFICE OF PETITIONS

In re Application of :
Amol Ramesh JOSHI et al. :
Application No. 12/054,081 : ON PETITION
Filed: March 24, 2008 :
Attorney Docket No. SPSN-AF02121.DIV :

This is a decision on the petition under 37 CFR 1.137(b), filed August 03, 2009, to revive the above-identified application.

The petition is **GRANTED**.

The above-identified application became abandoned for failure to reply in a timely manner to the non-final Office action mailed November 13, 2008, which set a shortened statutory period for reply of three (3) months. No extensions of time under the provisions of 37 CFR 1.136(a) were obtained. Accordingly, the above-identified application became abandoned on February 14, 2009.

The petition satisfies the conditions for revival pursuant to the provisions of 37 CFR 1.137(b) in that (1) the reply in the form of an amendment; (2) the petition fee of $1620; and (3) the required statement of unintentional delay have been received. Accordingly, the reply to the non-final Office action of November 13, 2008 is accepted as having been unintentionally delayed.

Telephone inquiries concerning this decision should be directed to Ella Colbert at (571) 272-6051-7099 or in her absence, the undersigned at (571) 272-7099.

The application file is being referred to Technology Center AU 2893 for appropriate action on the concurrently filed amendment.

David Bucci
Petitions Examiner
Office of Petitions

UNITED STATES PATENT AND TRADEMARK OFFICE

UNITED STATES DEPARTMENT OF COMMERCE
United States Patent and Trademark Office
Address: COMMISSIONER FOR PATENTS
P.O. Box 1450
Alexandria, Virginia 22313-1450
www.uspto.gov

APPLICATION NO.	FILING DATE	FIRST NAMED INVENTOR	ATTORNEY DOCKET NO.	CONFIRMATION NO.
12/054,104	03/24/2008	Anish Chandran	IN920070085US1	5506

75749 7590 05/23/2008
MAXVALUEIP CONSULTING LLC
11204 ALBERMYRTLE ROAD
POTOMAC, MD 20854

EXAMINER
CALDWELL, ANDREW T

ART UNIT	PAPER NUMBER
2142	

MAIL DATE	DELIVERY MODE
05/23/2008	PAPER

Please find below and/or attached an Office communication concerning this application or proceeding.

The time period for reply, if any, is set in the attached communication.

UNITED STATES PATENT AND TRADEMARK OFFICE

Commissioner for Patents
United States Patent and Trademark Office
P.O. Box 1450
Alexandria, VA 22313-1450
www.uspto.gov

MAXVALUEIP CONSULTING LLC
11204 ALBERMYRTLE ROAD
POTOMAC MD 20854

In re Application of: Anish CHANDRAN Serial No.: 12/054104 Filed: Mar 24, 2008 Docket: IN920070085US1 Title: ALTERNATE JAVA SERVER PAGE (JSP) PROCESSING FOR BETTER RESPONSE TIME	DECISION ON PETITION TO MAKE SPECIAL FOR NEW APPLICATION UNDER 37 C.F.R. § 1.102 & M.P.E.P. § 708.02

This is a decision on the petition filed on Mar 24, 2008 to make the above-identified application special for accelerated examination procedure under 37 C.F.R. § 1.102(d).

The petition to make the application special is **DISMISSED**.

REGULATION AND PRACTICE

A grantable petition to make special under 37 C.F.R. § 1.102(d) and pursuant to the "Change to Practice for Petitions in Patent Applications to Make Special and for Accelerated Examination" published in the Federal Register on June 26, 2006 (71 Fed. Reg. 36323), must satisfy the following conditions:

I. Conditions Regarding the Application:

1. the application must be a non-reissue utility or design application filed under 37 CFR 1.111(a);

2. the application, the petition and the required fees must be filed electronically using the USPTO's electronic filing system (EFS), or EFS-web; if not filed electronically, a statement asserting that EFS and EFS-web were not available during the normal business hours.

3. at the time of filing, the application must be complete under 37 CFR 1.51 and in condition for examination;

4. the application must contain three or fewer independent claims and twenty or fewer total claims and the claims must be directed to a single invention.

II. Conditions Regarding the Petition:

The petition must:

1. be filed with the application;

2. include a statement that applicant agrees not to separately argue the patentability of any independent claim during any appeal in the application;

3. include a statement that applicant agrees to make an election without traverse in a telephone interview.

4. include a statement that applicant agrees to conduct such an interview when requested by the examiner.

5. include a statement, made based on a good faith belief, that a preexamination search in compliance with the following requirements, was conducted, including an identification of the filed of search by United States class and subclass, where applicable, and for database searches, the search logic or chemical structure or sequence used as a query, the name of the file(s) searched and the database service, and the date of the search.

The preexamination search must:

5.1 involve U.S. patents and patent application publications, foreign patent documents, and non-patent literature, unless the applicant can justify with reasonable certainty that no references more pertinent than those already identified are likely to be found in the eliminated sources and includes such a justification with this statement;

5.2. be directed to the claimed invention and encompass all of the features of the claims, giving the claims the broadest reasonable interpretation;

5.3. encompass the disclosed features that may be claimed.

6. must provide in support of the petition an accelerated examination support document. An accelerated examination support document must include:

6.1. an information disclosure statement (IDS) in compliance with 37 CFR 1.98 citing each reference deemed most closely related to the subject matter of each of the claims;

6.2. an identification of all the limitations in the claims that are disclosed by the reference specifying where the limitation is disclosed in the cited reference;

6.3. a detailed explanation of how each of the claims is patentable over the references cited with particularity required by 37 CFR 1.111(b) and (c);

6.4. a concise statement of the utility of the invention as defined in each of the independent claims (unless the application is a design application);

6.5. a showing of where each limitation of the claims finds support under 35 USC 112, first paragraph, in the written description of the specification. If applicable, the showing must also identify: (1) each means- (or step) plus-function claim element that invokes consideration under 35 USC 112, sixth paragraph; and (2) the structure, material, or acts in the specification that corresponds to each means- (or step) plus-function claim element that invokes consideration under 35 USC 112, sixth paragraph; if the application claims the benefit of one or more applications under title 35, United States Code, the showing must also include where each limitation of the claims finds support under 35 USC 112, first paragraph, in each such application in which such supports exists;

6.6. an identification of any cited references that may be disqualified under 35 USC 103(c).

REVIEW OF FACTS

The conditions I.1 to II.4 above are considered to have been met. However, the petition fails to comply with conditions II.5 and II.6 above. Therefore, the petition fails to meet the required conditions to be accorded special status under the accelerated examination procedure.

Regarding item II.5.1 above, for classification searches, MPEP 719.05 states that a *classification search* is defined as a complete search of **all** the documents in a particular subclass, and it is not limited by any text query or other means. Petitioner should clarify whether the text search logic used was utilized in combination with the identified field of search (i.e. class 709/217-219, 201-203, 715/234-242, 733-749, 243-253, 719/310, 311-332, and so on) or separate therefrom (i.e. **the identified classes and subclasses were searched in their entirety**); and if they were combined, how the combination of searches were performed.

Regarding the requirement of MPEP § 708.02(a)(I.)(H) and items II.5.2 and II5.3 above, the pre-examination search must involve U.S. patents and patent application publications, foreign patent documents, and non-patent literature and the pre-examination search must be directed to the (instant) claimed invention and encompass all of the features of the claims, giving the claim the broadest reasonable interpretation. The search logic does not seems to include the inventive concept or features included in the in the claim language that covers the subject matter of the claims using terms recognized in the art given their broadest reasonable interpretation.

The search should consider individual features by themselves and combinations of features. The search should cover the **broadest scope** encompassed by the claims **as well as** claims of **narrow and intermediate breadth**. It is noted that search logic does not include the relevant search terms for claimed features listed below; some of these features have been identified as key features in the Detailed Explanation of Patentability by applicant to distinguishing the instant claimed subject matter from the cited prior art references deemed most closely related to the claimed invention in the Examination Support Document:

1) storing each second segment of said one or more segments that are static and an associated segment separator in a static file corresponding to said server page;

2) deploying said static file on a web server;

3) wherein said request indicates that said web client supports a jumbled-document multipurpose internet mail extensions type;

4) said web server appending said web container response stream to said client response stream after removing a header portion of said web container response stream;

5) said web client constructing a client response content from said client response stream in a predetermined format by merging a content of each said first segment of said one or more segments, in ascending order of said sequence number that said first segment is associated with.

It is noted that no search terms related to the concepts recited above is found in the search logic. It is further noticed that the search logic uses only logical AND and OR operators. Such search logic does not appear to embrace the inventive concept or features of the claims or alleged patentable features and should be expanded to include relevant and related words coupled with search operators (i.e. WITH, SAME, NEARN, ADJN) to better cover the concept of the claimed features.

The Petitioner is requested to review the all claim limitations, especially those asserted as patentable distinctions from the cited references to ensure the preexamination search covers these concepts, and update the search and/or provide any clarification if deemed necessary.

Regarding the requirement of MPEP § 708.02(a)(I.)(I)(5) and item II.6.5 above, the petitioner is required to **specifically identify what corresponding elements in the figures** and **specifically identify where the corresponding written description in the cited portions of the instant specification** can find support under 35 U.S.C. § 112, first paragraph for **each limitation** of the claim.

Petitioner identifies the support for the claimed features by referring to "top", "middle" or "bottom" of a page and the entire Fig. 1 rather than by page, line and corresponding element in the figures. As such each claim feature is not separately identified with its corresponding support element. Petitioner is required to identify each claim limitations and the corresponding support in the cited portions **(page, line, and corresponding element in the figures)** where the instant claim language finds corresponding support.

DECISION

For the above-stated reasons, the petition is **DISMISSED**. The application will therefore be taken up by the examiner for action in its regular turn.

Petitioner is given a single opportunity to perfect the petition. Any request for reconsideration of this decision must be submitted within 1 (one) month or 30 (thirty) days, whichever is longer, (no extension of time under 37 CFR 1.136(a)) from the date of this decision in order to be considered timely. Any request for reconsideration must address the deficiencies indicated above.

Petitioner is reminded that, upon granting of the special status of the application on request for reconsideration, the application will be processed expeditiously. However, due to the dismissal of the instant petition, examination may not be completed within twelve months of the filing date of the application.

Any inquiry regarding this decision should be directed the undersigned whose telephone number is (571) 272-4147.

If attempts to reach the undersigned by telephone are unsuccessful, Tod Swann, Quality Assurance Specialist, can be reached at (571) 272-3612.

Kim Huynh,
Quality Assurance Specialist
Technology Center 2100
Computer Architecture, Software and Information Security

UNITED STATES PATENT AND TRADEMARK OFFICE

UNITED STATES DEPARTMENT OF COMMERCE
United States Patent and Trademark Office
Address: COMMISSIONER FOR PATENTS
P.O. Box 1450
Alexandria, Virginia 22313-1450
www.uspto.gov

APPLICATION NO.	FILING DATE	FIRST NAMED INVENTOR	ATTORNEY DOCKET NO.	CONFIRMATION NO.
12/054,104	03/24/2008	Anish Chandran	IN920070085US1	5506

75749 7590 09/29/2008
MAXVALUEIP CONSULTING LLC
11204 ALBERMYRTLE ROAD
POTOMAC, MD 20854

EXAMINER
CALDWELL, ANDREW T

ART UNIT	PAPER NUMBER
2142	

MAIL DATE	DELIVERY MODE
09/29/2008	PAPER

Please find below and/or attached an Office communication concerning this application or proceeding.

The time period for reply, if any, is set in the attached communication.

UNITED STATES PATENT AND TRADEMARK OFFICE

Commissioner for Patents
United States Patent and Trademark Office
P.O. Box 1450
Alexandria, VA 22313-1450
www.uspto.gov

MAXVALUEIP CONSULTING LLC
11204 ALBERMYRTLE ROAD
POTOMAC MD 20854

In re Application of: Anish CHANDRAN Serial No.: 12/054104 Filed: Mar 24, 2008 Docket: IN920070085US1 Title: ALTERNATE JAVA SERVER PAGE (JSP) PROCESSING FOR BETTER RESPONSE TIME	DECISION ON PETITION TO MAKE SPECIAL FOR NEW APPLICATION UNDER 37 C.F.R. § 1.102 & M.P.E.P. § 708.02

This is a decision on the renewed petition filed on June 23, 2008 (and supplemental filed 8/29/08) to make the above-identified application special for accelerated examination procedure under 37 C.F.R. § 1.102(d). The original petition, submitted on Mar 24, 2008 was dismissed in the decision mailed on May 23, 2008.

The renewed petition adequately addresses all the concerns raised in the dismissal; it not noted that no additional references submitted as the resulted of the updated search. The petition to make the application special is **GRANTED**.

The application is eligible for accelerated examination and the petition complies with the conditions for granting the application special status pursuant to the "Change to Practice for Petitions in Patent Applications to Make Special and for Accelerated Examination" published June 26, 2006, in the Federal Register. (71 Fed. Reg. 36323).

The prosecution of the instant application will be conducted expeditiously according to the following guidelines.

1. The application will be docketed to an examiner and taken up for action within two weeks of the date of this decision.

2. Restriction Practice:
   If the examiner determines that the claims are not directed to a single invention, a telephone request to elect one single invention will be made pursuant to MPEP 812.01. As a prerequisite to the grant of this petition, the applicant has agreed to make an oral election, by telephone, without traverse. If the applicant refuses to make an election without traverse, or the examiner cannot reach the applicant

after a reasonable effort, the examiner will treat the first claimed invention (invention defined by claim 1) as having being constructively elected without traverse for examination.

3. Office action:
If it is determined that, after appropriate consultation, there is a potential rejection or any other issue to be addressed, the examiner will telephone the applicant and arrange an interview to discuss and resolve the issue. An Office action, other than a Notice of Allowance and Fee(s) Due (Notice of Allowance), will not be issued unless either: 1) an interview was conducted but did not result in agreed to action that places the application in condition for allowance, or, 2) a determination is made that an interview would be unlikely to result in the application being placed in condition for allowance, and 3) an internal conference has been held to review any rejection of any claim.

4. Time for Reply:
An Office action other than a Notice of Allowance or a final Office action will set a shortened statutory period of one month or thirty days, whichever is longer, for reply with no extension of time available under 37 CFR 1.136(a). Failure to timely file a reply within this non-extendible period for reply will result in the abandonment of the application.

5. Reply by Applicant:
A timely reply to an Office action other than the Notice of Allowance must be submitted electronically via EFS or EFS-web and limited to addressing the rejections, objections and requirement made. Any amendment that attempts to: 1) add claims which would result in more than three pending independent claims or more than twenty pending total claims; 2) present claims not encompassed by the pre-examination search or an updated accelerated examination support document; or 3) present claims that are directed a non-elected invention or an invention other than that previously claimed and examined in the application, will be treated as not fully responsive and will not be entered.

   For any amendment to the claims (including any new claim) that is not encompassed by the accelerated examination support document, applicant must provide an updated accelerated examination support document that encompasses the amended or new claims at the time of filing of the amendment.

   To proceed expeditiously with the examination, it is recommended that a reply with amendments made to any claim or with any new claim being added be accompanied by an updated accelerated examination support document or a statement explaining how the amended or new claim is supported by the original accelerated examination support document.

6. Information Disclosure Statement (IDS):

Any IDS filed during prosecution must be submitted electronically via EFS or EFS-web, accompanied by an updated accelerated examination support document, and be in compliance with 37 CFR 1.97 and 1.98.

7. Post-Allowance Processing:
   To expedite processing of the allowed application into a patent, the applicant must: 1) pay the required fees within one month of the date of the Notice of Allowance, and 2) not file any post allowance papers not required by the Office. In no event may the issue fee be paid and accepted later than three months from the date of the Notice of Allowance.

8. After-Final and Appeal Procedures:
   To expedite prosecution, after receiving the final Office action, applicant must: 1) promptly file a notice of appeal, an appeal brief and appeal fees; and 2) not request a pre-appeal brief conference.

   Any amendment, affidavit or other evidence filed after final Office action must comply with applicable rules and the requirements outlined in numbered paragraphs 5 and 6 above.

   On appeal, the application will proceed according to normal appeal procedures. After appeal, the application will again be treated special.

9. Proceedings Outside the Normal Examination Process:
   If the application becomes involved in a proceeding that is outside the normal examination process (e.g., a secrecy order, national security review, interference proceeding, petitions under 37 CFR 1.181, 182 or 183), the application will be treated special before and after such proceeding.

10. Final Disposition:
    The twelve-month goal of this accelerated examination procedure ends with a final disposition. The mailing of a final Office action, a Notice of Allowance, the filing of a Notice of Appeal, or the filing of a Request for Continued Examination (RCE) is the final disposition.

If, during prosecution, a paper is not filed electronically using EFS-web, a reply is filed but is not fully responsive, the application is involved in an appeal, or a proceeding outside normal examination process, the application will still be examined expeditiously, however, the final disposition may occur more than twelve months from the filing of the application. In addition, Applicant is reminded that due to the dismissal of the previous petition submission, examination may not be completed within twelve months of the filing date of the application.

Any inquiry regarding this decision should be directed the undersigned whose telephone number is (571) 272-4147.

If attempts to reach the undersigned by telephone are unsuccessful, Tod Swann, Quality Assurance Specialist, can be reached at (571) 272-3612.

/Kim Huynh/

Kim Huynh,
Quality Assurance Specialist
Technology Center 2100
Computer Architecture, Software and Information Security

UNITED STATES PATENT AND TRADEMARK OFFICE

Commissioner for Patents
United States Patent and Trademark Office
P.O. Box 1450
Alexandria, VA 22313-1450
www.uspto.gov

MAIL

MAY 07 2008
DIRECTOR'S OFFICE
TECHNOLOGY CENTER 2600

MAXVALUEIP CONSULTING LLC
11204 ALBERMYRTLE ROAD
POTOMAC MD 20854

In re Application of:
PATEL, NEELAKANT REDDY
Serial No.: 12/054,145
Filed: March 24, 2008

Title: **TIMESHARING OF A DISPLAY SCREEN**

DECISION ON PETITION TO MAKE SPECIAL FOR NEW APPLICATION UNDER 37 C.F.R. § 1.102 & M.P.E.P. § 708.02

This is a decision on the petition filed on March 24, 2008 requesting that the above-identified application be made special for accelerated examination procedure under 37 C.F.R. § 1.102(d).

The petition to make the application special is **GRANTED**.

The application is eligible for accelerated examination and the petition complies with the conditions for granting the application special status pursuant to the "Change to Practice for Petitions in Patent Applications to Make Special and for Accelerated Examination" published June 26, 2006, in the Federal Register. (71 Fed. Reg. 36323).

The prosecution of the instant application will be conducted expeditiously according to the following guidelines.

1. The application will be docketed to an examiner and taken up for action within two weeks of the date of this decision.

2. Restriction Practice:
   If the examiner determines that the claims are not directed to a single invention, a telephone request to elect one single invention will be made pursuant to MPEP 812.01. As a prerequisite to the grant of this petition, the applicant has agreed to make an oral election, by telephone, without traverse. If the applicant refuses to make an election without traverse, or the examiner cannot reach the applicant after a reasonable effort, the examiner will treat the first claimed invention (invention defined by claim 1) as having being constructively elected without traverse for examination.

3. Office action:

If it is determined that, after appropriate consultation, there is a potential rejection or any other issue to be addressed, the examiner will telephone the applicant and arrange an interview to discuss and resolve the issue. An Office action, other than a Notice of Allowance and Fee(s) Due (Notice of Allowance), will not be issued unless either: 1) an interview was conducted but did not result in agreed to action that places the application in condition for allowance, or, 2) a determination is made that an interview would be unlikely to result in the application being placed in condition for allowance, and 3) an internal conference has been held to review any rejection of any claim.

4. Time for Reply:
An Office action other than a Notice of Allowance or a final Office action will set a shortened statutory period of one month or thirty days, whichever is longer, for reply with no extension of time available under 37 CFR 1.136(a). Failure to timely file a reply within this non-extendible period for reply will result in the abandonment of the application.

5. Reply by Applicant:
A timely reply to an Office action other than the Notice of Allowance must be submitted electronically via EFS or EFS-web and limited to addressing the rejections, objections and requirement made. Any amendment that attempts to: 1) add claims which would result in more than three pending independent claims or more than twenty pending total claims; 2) present claims not encompassed by the pre-examination search or an updated accelerated examination support document; or 3) present claims that are directed a non-elected invention or an invention other than that previously claimed and examined in the application, will be treated as not fully responsive and will not be entered.

   For any amendment to the claims (including any new claim) that is not encompassed by the accelerated examination support document, applicant must provide an updated accelerated examination support document that encompasses the amended or new claims at the time of filing of the amendment.

   To proceed expeditiously with the examination, it is recommended that a reply with amendments made to any claim or with any new claim being added be accompanied by an updated accelerated examination support document or a statement explaining how the amended or new claim is supported by the original accelerated examination support document.

6. Information Disclosure Statement (IDS):
Any IDS filed during prosecution must be submitted electronically via EFS or EFS-web, accompanied by an updated accelerated examination support document, and be in compliance with 37 CFR 1.97 and 1.98.

7. Post-Allowance Processing:
To expedite processing of the allowed application into a patent, the applicant must: 1) pay the required fees within one month of the date of the Notice of Allowance, and 2) not

file any post allowance papers not required by the Office. In no event may the issue fee be paid and accepted later than three months from the date of the Notice of Allowance.

8. After-Final and Appeal Procedures:
   To expedite prosecution, after receiving the final Office action, applicant must: 1) promptly file a notice of appeal, an appeal brief and appeal fees; and 2) not request a pre-appeal brief conference.

   Any amendment, affidavit or other evidence filed after final Office action must comply with applicable rules and the requirements outlined in numbered paragraphs 5 and 6 above.

   On appeal, the application will proceed according to normal appeal procedures. After appeal, the application will again be treated special.

9. Proceedings Outside the Normal Examination Process:
   If the application becomes involved in a proceeding that is outside the normal examination process (e.g., a secrecy order, national security review, interference proceeding, petitions under 37 CFR 1.181, 182 or 183), the application will be treated special before and after such proceeding.

10. Final Disposition:
    The twelve month goal of this accelerated examination procedure ends with a final disposition. The mailing of a final Office action, a Notice of Allowance, the filing of a Notice of Appeal, or the filing of a Request for Continued Examination (RCE) is the final disposition.

If, during prosecution, a paper is not filed electronically using EFS-web, a reply is filed but is not fully responsive, the application is involved in an appeal, or a proceeding outside normal examination process, the application will still be examined expeditiously, however, the final disposition may occur more than twelve months from the filing of the application.

Any inquiry regarding this decision should be directed to Michael Horabik, Quality Assurance Specialist, at (571) 272-3068.

Michael Horabik
Quality Assurance Specialist
Technology Center 2600
Communications

UNITED STATES PATENT AND TRADEMARK OFFICE

UNITED STATES DEPARTMENT OF COMMERCE
United States Patent and Trademark Office
Address: COMMISSIONER FOR PATENTS
P.O. Box 1450
Alexandria, Virginia 22313-1450
www.uspto.gov

VEDDER PRICE P.C.
222 N. LASALLE STREET
CHICAGO, IL 60601

Mail Date: 04/21/2010

Applicant	: Ronald Joe Hickenbottom	: DECISION ON REQUEST FOR
Patent Number	: 7604066	: RECALCULATION of PATENT
Issue Date	: 10/20/2009	: TERM ADJUSTMENT IN VIEW
Appliction No	: 12/054,161	: OF WYETH AND NOTICE OF INTENT TO
Filed	: 03/24/2008	: ISSUE CERTIFICATE OF CORRECTION
		:

The Request for Recalculation is **GRANTED** to the extent indicated.

The patent term adjustment has been determined to be **0** days. The USPTO will *sua sponte* issue a certificate of correction reflecting the amount of PTA days determined by the recalculation.

Prior to the issuance of the certificate of correction, the USPTO will afford patentee an opportunity to be heard and request reconsideration. Accordingly, patentee has **one month or thirty (30) days**, whichever is longer, to file a request for reconsideration of this patent term adjustment calculation. See 35 U.S.C. 154(b)(3)(B)(ii) and 37 CFR 1.322(a)(4). No extensions of time will be granted under 37 CFR 1.136.

Patentee should use document code PET.OP if electronically filing a request for reconsideration of this patent term adjustment calculation. The patentee must also include the information required by 37 CFR 1.705(b)(2) and the fee required by 37 CFR 1.18(e). If patentee does not file a timely request for reconsideration of this patent term adjustment calculation including the information required by 37 CFR 1.705(b)(2) and the fee required by 37 CFR 1.18(e), the USPTO will issue a certificate of correction reflecting the PTA determination noted above.

Patentee should be aware that in order to preserve the right to review in the United States District Court for the District of Columbia of the USPTO patent term adjustment determination, patentee must ensure that he or she also take the steps required under 35 U.S.C. 154(b)(4)(A) in a timely manner. Nothing in the request for recalculation should be construed as providing an alternative time frame for commencing a civil action under 35 U.S.C. 154(b)(4)(A).

Any questions concerning this decision should be directed to the Office of Patent Legal Administration at 571-272-7702.

UNITED STATES PATENT AND TRADEMARK OFFICE

Commissioner for Patents
United States Patent and Trademark Office
P.O. Box 1450
Alexandria, VA 22313-1450
www.uspto.gov

VEDDER PRICE P.C.
222 N. LASALLE STREET
CHICAGO, IL 60601

MAILED

JUL 16 2010

OFFICE OF PETITIONS

In re Patent No. 7,604,066 :
Issue Date: October 20, 2009 :
Application No. 12/054,161 : NOTICE
Filed: March 24, 2008 :
Attorney Docket No. 01035.00.0180

This is a notice regarding your request for acceptance of a fee deficiency submission under 37 CFR 1.28. On September 1, 1998, the Court of Appeals for the Federal Circuit held that 37 CFR 1.28(c) is the sole provision governing the time for correction of the erroneous payment of the issue fee as a small entity. **See DH Technology v. Synergystex International, Inc. 154 F.3d 1333, 47 USPQ2d 1865 (Fed. Cir. Sept. 1, 1998).**

The Office no longer investigates or rejects original or reissue applications under 37 CFR 1.56. **1098 Off. Gaz. Pat. Office 502 (January 3, 1989)**. Therefore, nothing in this Notice is intended to imply that an investigation was done.

Your fee deficiency submission under 37 CFR 1.28 is hereby **ACCEPTED**.

Inquiries related to this communication should be directed to Irvin Dingle at (571) 272-3210.

Irvin Dingle
Petitions Examiner
Office of Petitions

UNITED STATES PATENT AND TRADEMARK OFFICE

UNITED STATES DEPARTMENT OF COMMERCE
United States Patent and Trademark Office
Address: COMMISSIONER FOR PATENTS
P.O. Box 1450
Alexandria, Virginia 22313-1450
www.uspto.gov

APPLICATION NO.	FILING DATE	FIRST NAMED INVENTOR	ATTORNEY DOCKET NO.	CONFIRMATION NO.
12/054,168	03/24/2008	Lisa Anne Seacat	RSW920070496US1	5619

75749 7590 05/12/2008
MAXVALUEIP CONSULTING LLC
11204 ALBERMYRTLE ROAD
POTOMAC, MD 20854

EXAMINER
STAMBER, ERIC W

ART UNIT	PAPER NUMBER
3622	

MAIL DATE	DELIVERY MODE
05/12/2008	PAPER

Please find below and/or attached an Office communication concerning this application or proceeding.

The time period for reply, if any, is set in the attached communication.

UNITED STATES PATENT AND TRADEMARK OFFICE

Commissioner for Patents
United States Patent and Trademark Office
P.O. Box 1450
Alexandria, VA 22313-1450
www.uspto.gov

MAXVALUEIP CONSULTING LLC
11204 ALBERMYRTLE ROAD
POTOMAC, MD 20854

	:	**DECISION ON PETITION**
In re application of	:	**TO MAKE SPECIAL FOR**
Seacat et al.	:	**NEW APPLICATION**
Application No. 12/054,168	:	**UNDER 37 CFR 1.102**
Filed: March 24, 2008		
For: SERVED ADS AS PREVIEWS AND SUMMARIES		

This is a decision on the petition filed on March 24, 2008 to make the above-identified application special for accelerated examination procedure under 37 C.F.R. § 1.102(d).

The petition to make the application special is **DISMISSED**.

REGULATION AND PRACTICE

A grantable petition to make special under 37 C.F.R. § 1.102(d) and pursuant to the "Change to Practice for Petitions in Patent Applications to Make Special and for Accelerated Examination (AE)" published in the Federal Register on June 26, 2006 (71 Fed. Reg. 36323), must satisfy the following conditions:

I. Conditions Regarding the Application:

1. the application must be a non-reissue utility or design application filed under 37 CFR 1.111(a);

2. the application, the petition and the required fees must be filed electronically using the USPTO's electronic filing system (EFS), or EFS-web; if not filed electronically, a statement asserting that EFS and EFS-web were not available during the normal business hours.

3. at the time of filing, the application must be complete under 37 CFR 1.51 and in condition for examination;

4. the application must contain three or fewer independent claims and twenty or fewer total claims and the claims must be directed to a single invention.

II. Conditions Regarding the Petition:

The petition must:

1. be filed with the application;

2. include a statement that applicant agrees not to separately argue the patentability of any independent claim during any appeal in the application;

3. include a statement that applicant agrees to make an election without traverse in a telephone interview.

4. include a statement that applicant agrees to conduct such an interview when requested by the examiner.

5. include a statement, made based on a good faith belief, that a preexamination search in compliance with the following requirements, was conducted, including an identification of the field of search by United States class and subclass, where applicable, and for database searches, the search logic or chemical structure or sequence used as a query, the name of the file(s) searched and the database service, and the date of the search.

The preexamination search must:

5.1 involve U.S. patents and patent application publications, foreign patent documents, and non-patent literature, unless the applicant can justify with reasonable certainty that no references more pertinent than those already identified are likely to be found in the eliminated sources and includes such a justification with this statement;

5.2. be directed to the claimed invention and encompass all of the features of the claims, giving the claims the broadest reasonable interpretation;

5.3. encompass the disclosed features that may be claimed.

6. must provide in support of the petition an accelerated examination support document.

An accelerated examination support document must include:

6.1. an information disclosure statement (IDS) in compliance with 37 CFR 1.98 citing each reference deemed most closely related to the subject matter of each of the claims;

6.2. an identification of all the limitations in the claims that are disclosed by the reference specifying where the limitation is disclosed in the cited reference;

6.3. a detailed explanation of how each of the claims is patentable over the references cited with particularity required by 37 CFR 1.111(b) and (c);

6.4. a concise statement of the utility of the invention as defined in each of the independent claims (unless the application is a design application);

6.5. a showing of where each limitation of the claims finds support under 35 USC 112, first paragraph, in the written description of the specification. If applicable, the showing must also identify: (1) each means- (or step) plus-function claim element that invokes consideration under 35 USC 112, sixth paragraph; and (2) the structure, material, or acts in the specification that corresponds to each means- (or step) plus-

function claim element that invokes consideration under 35 USC 112, sixth paragraph; if the application claims the benefit of one or more applications under title 35, United States Code, the showing must also include where each limitation of the claims finds support under 35 USC 112, first paragraph, in each such application in which such supports exists;

6.6. an identification of any cited references that may be disqualified under 35 USC 103(c).

REVIEW OF FACTS

The petition in this case fails to comply with condition II.5.2 and II.6.5.

For condition II.5.2, the search must be directed to the claimed invention.

The office has classified the application in 705/14. In order to comply with the requirement, the NPL search template for class 705/14 must be used and a search for patents and PG Pubs for class 705/14 must be done.

For condition II.6.5, an accelerated examination support document must include a showing of where each limitation of the claims finds support under 35 USC 112, first paragraph, in the written description of the specification.

Per MPEP 2163, "The 'written description' requirement implements the principle that a patent must describe the technology that is sought to be patented; the requirement serves both to satisfy the inventor's obligation to disclose the technologic knowledge upon which the patent is based, and to demonstrate that the patentee was in possession of the invention that is claimed." *Capon v. Eshhar*, 418 F.3d 1349, 1357, 76 USPQ2d 1078, 1084 (Fed. Cir. 2005). An applicant shows possession of the claimed invention by describing the claimed invention with all of its limitations using such descriptive means as words, structures, figures, diagrams, and formulas <u>that fully set forth</u> the claimed invention. *Lockwood v. American Airlines, Inc.,* 107 F.3d 1565, 1572, 41 USPQ2d 1961, 1966 (Fed. Cir. 1997). The citation of the mere copying of the exact claim language into the specification does not comply with the requirement.

In order to comply with the II.6.5 requirement, one must show the portions of the specification that disclose that applicant was in possession of the claimed invention. For example, in the instant application, claim 1, first limitation,

"serving one or more contextual ads with a first content based on a first context of said first content;"	Last line of page 2, first line of page 3. "a particular page" is the "first content" (not show in drawings)

As an aside, applicant should be mindful of 37 CFR 1.83, Content of Drawings, "The drawing in a nonprovisional application must show every feature of the invention specified in the claims."

The petition fails to meet the required conditions to be accorded special status under the accelerated examination procedure.

DECISION

For the above stated reasons, the petition is **DISMISSED**. The application will therefore be taken up by the examiner for action in its regular turn.

Petitioner is given a single opportunity to perfect the petition. Any request for reconsideration of this decision must be submitted within one (1) month or thirty (30) days, whichever is longer, from the date of this decision. No extensions of time will be granted under 37 CFR 1.136(a) if the request is to be considered timely. Any request for reconsideration must address the deficiencies indicated above.

Petitioner is reminded that, upon granting of the special status of the application on request for reconsideration, the application will be processed expeditiously. However, due to the dismissal of the instant petition, examination may not be completed within twelve months of the filing date of the application.

Any inquiry regarding this decision should be directed to Robert Weinhardt, Business Practice Specialist, at (571) 272-6633. Inquiries may also be directed to Michael Cuff at (571) 272-6778.

Robert A. Weinhardt,
Business Practice Specialist
Technology Center 3600

RW/MAC/05/07/08

UNITED STATES PATENT AND TRADEMARK OFFICE

UNITED STATES DEPARTMENT OF COMMERCE
United States Patent and Trademark Office
Address: COMMISSIONER FOR PATENTS
P.O. Box 1450
Alexandria, Virginia 22313-1450
www.uspto.gov

APPLICATION NO.	FILING DATE	FIRST NAMED INVENTOR	ATTORNEY DOCKET NO.	CONFIRMATION NO.
12/054,168	03/24/2008	Lisa Anne Seacat	RSW920070496US1	5619

75749 7590 07/17/2008
MAXVALUEIP CONSULTING LLC
11204 ALBERMYRTLE ROAD
POTOMAC, MD 20854

EXAMINER
STAMBER, ERIC W

ART UNIT	PAPER NUMBER
3622	

MAIL DATE	DELIVERY MODE
07/17/2008	PAPER

Please find below and/or attached an Office communication concerning this application or proceeding.

The time period for reply, if any, is set in the attached communication.

UNITED STATES PATENT AND TRADEMARK OFFICE

Commissioner for Patents
United States Patent and Trademark Office
P.O. Box 1450
Alexandria, VA 22313-1450
www.uspto.gov

MAILED
FROM DIRECTORS OFFICE
JUL 16 2008
TECHNOLOGY CENTER 3600

MAXVALUEIP CONSULTING LLC
11204 ALBERMYRTLE ROAD
POTOMAC MD 20854

DECISION ON PETITION TO MAKE SPECIAL FOR NEW APPLICATION UNDER 37 CFR 1.102

In re application of
Seacat et al.
Application No. 12/054,168
Filed: March 24, 2008
For: SERVED ADS AS PREVIEWS AND SUMMARIES

This is a decision on the petition filed on March 24, 2008 and the supplemental petition documents filed June 12, 2008 to make the above-identified application special for accelerated examination procedure under 37 C.F.R. § 1.102(d).

The petition to make the application special is **GRANTED**.

The application is eligible for accelerated examination and the petition complies with the conditions for granting the application special status pursuant to the "Change to Practice for Petitions in Patent Applications to Make Special and for Accelerated Examination" published June 26, 2006, in the Federal Register. (71 Fed. Reg. 36323).

The prosecution of the instant application will be conducted expeditiously according to the following guidelines.

1. The application will be docketed to an examiner and taken up for action within two weeks of the date of this decision.

2. Restriction Practice:
If the examiner determines that the claims are not directed to a single invention, a telephone request to elect one single invention will be made pursuant to MPEP 812.01. As a prerequisite to the grant of this petition, the applicant has agreed to make an oral election, by telephone, without traverse. If the applicant refuses to make an election without traverse, or the examiner cannot reach the applicant after a reasonable effort, the examiner will treat the first claimed invention (invention defined by claim 1) as having being constructively elected without traverse for examination.

3. Office action:
If it is determined that, after appropriate consultation, there is a potential rejection or any other issue to be addressed, the examiner will telephone

the applicant and arrange an interview to discuss and resolve the issue. An Office action, other than a Notice of Allowance and Fee(s) Due (Notice of Allowance), will not be issued unless either: 1) an interview was conducted but did not result in agreed to action that places the application in condition for allowance, or, 2) a determination is made that an interview would be unlikely to result in the application being placed in condition for allowance, and 3) an internal conference has been held to review any rejection of any claim.

4. Time for Reply:
   An Office action other than a Notice of Allowance or a final Office action will set a shortened statutory period of one month or thirty days, whichever is longer, for reply with no extension of time available under 37 CFR 1.136(a). Failure to timely file a reply within this non-extendible period for reply will result in the abandonment of the application.

5. Reply by Applicant:
   A timely reply to an Office action other than the Notice of Allowance must be submitted electronically via EFS or EFS-web and limited to addressing the rejections, objections and requirement made. Any amendment that attempts to: 1) add claims which would result in more than three pending independent claims or more than twenty pending total claims; 2) present claims not encompassed by the pre-examination search or an updated accelerated examination support document; or 3) present claims that are directed to a non-elected invention or an invention other than that previously claimed and examined in the application, will be treated as not fully responsive and will not be entered.

   For any amendment to the claims (including any new claim) that is not encompassed by the accelerated examination support document, applicant must provide an updated accelerated examination support document that encompasses the amended or new claims at the time of filing of the amendment.

   To proceed expeditiously with the examination, it is recommended that a reply with amendments made to any claim or with any new claim being added be accompanied by an updated accelerated examination support document or a statement explaining how the amended or new claim is supported by the original accelerated examination support document.

6. Information Disclosure Statement (IDS):
   Any IDS filed during prosecution must be submitted electronically via EFS or EFS-web, accompanied by an updated accelerated examination support document, and be in compliance with 37 CFR 1.97 and 1.98.

7. Post-Allowance Processing:

To expedite processing of the allowed application into a patent, the applicant must: 1) pay the required fees within one month of the date of the Notice of Allowance, and 2) not file any post allowance papers not required by the Office. In no event may the issue fee be paid and accepted later than three months from the date of the Notice of Allowance.

8. After-Final and Appeal Procedures:
   To expedite prosecution, after receiving the final Office action, applicant must: 1) promptly file a notice of appeal, an appeal brief and appeal fees; and 2) not request a pre-appeal brief conference.

   Any amendment, affidavit or other evidence filed after final Office action must comply with applicable rules and the requirements outlined in numbered paragraphs 5 and 6 above.

   On appeal, the application will proceed according to normal appeal procedures. After appeal, the application will again be treated special.

9. Proceedings Outside the Normal Examination Process:
   If the application becomes involved in a proceeding that is outside the normal examination process (e.g., a secrecy order, national security review, interference proceeding, petitions under 37 CFR 1.181, 182 or 183), the application will be treated special before and after such proceeding.

10. Final Disposition:
    The twelve month goal of this accelerated examination procedure ends with a final disposition. The mailing of a final Office action, a Notice of Allowance, the filing of a Notice of Appeal, or the filing of a Request for Continued Examination (RCE) is the final disposition.

    If, during prosecution, a paper is not filed electronically using EFS-web, a reply is filed but is not fully responsive, the application is involved in an appeal, or a proceeding outside normal examination process, the application will still be examined expeditiously, however, the final disposition may occur more than twelve months from the filing of the application.

Any inquiry regarding this decision should be directed to Robert Weinhardt, Business Practice Specialist, at (571) 272-6633 or Romain Jeanty, at (571) 272-6732.

Robert A. Weinhardt,
Business Practice Specialist

Technology Center 3600

RW/RJ/7/15/08

UNITED STATES PATENT AND TRADEMARK OFFICE

Commissioner for Patents
United States Patent and Trademark Office
P.O. Box 1450
Alexandria, VA 22313-1450
www.uspto.gov

MAXVALUEIP CONSULTING LLC
11204 ALBERMYRTLE ROAD
POTOMAC MD 20854

COPY MAILED

OCT 13 2009

OFFICE OF PETITIONS

In re Application of	:	
Lisa Anne Seacat et al.	:	
Application No. 12/054,168	:	DECISION ON PETITION
Filed: March 24, 2008	:	TO WITHDRAW
Attorney Docket No. RSW920070496US1	:	FROM RECORD
	:	

This is a decision on the Request to Withdraw as attorney or agent of record under 37 C.F.R. § 1.36(b), filed September 12, 2009.

The request is **NOT APPROVED.**

The Office will no longer accept address changes to a new practitioner or law firm filed with a Request, absent the filing of a power of attorney to the new representative. The Office will either change the correspondence address of record to the most current address information provided for the assignee of the entire interest who properly became of record under 37 CFR 3.71 or, if no assignee of the entire interest has properly been made of record under 37 CFR 3.71, the most current address information provided for the first named inventor.

Accordingly, the request to withdraw from record cannot be approved because the request to change the correspondence address does not include a proper power of attorney nor is the address that of: (1) the first named inventor; or (2) an assignee of the entire interest under 37 C.F.R 3.71.

All future communications from the Office will continue to be directed to the above-identified address until otherwise properly notified.

Telephone inquiries concerning this decision should be directed to the undersigned at 571-272-4618.

/Kimberly Inabinet/

Kimberly Inabinet
Petitions Examiner
Office of Petitions

UNITED STATES PATENT AND TRADEMARK OFFICE

6-15-09

Commissioner for Patents
United States Patent and Trademark Office
P.O. Box 1450
Alexandria, VA 22313-1450
www.uspto.gov

Patent No. : 7,536,770
Ser. No. : 12/054,179
Inventor(s) : Akihiko Yamazaki, e t. al.
Issued : May 26, 2009

Re: Request for Certificate of Correction

Consideration has been given your request for the issuance of a certificate of correction for the above-identified patent under the provisions of Rule(s) 1.322.

Assignees' names and addresses (assignment data) printed in a patent, are based *solely* on information supplied in the appropriate space for identifying the assignment data, i.e., item 3 of the Issue Fee Transmittal Form PTOL-85B. Granting of a request under 37 CFR 3.81(b) is required to correct applicant's error providing ***incorrect or erroneous*** assignment data, *before* issuance of a Certificate of Correction, under 37 CFR 1.323 *(see Manual of Patent Examining Procedures (M.P.E.P) Chp.1400, sect. 1481).* This procedure is required *at any time after the issue fee is paid*, including after issuance of the patent.

In view of the foregoing, your request is hereby denied.

A request to correct the Assignee under 37 CFR 3.81(b) should include:

A. **the processing fee set forth in 37 CFR 1.117(h) (currently $130);**
B. a statement that the failure to include the correct assignee name on the PTOL-85B was inadvertent; and
C. a copy of the Notice of Recordation of Assignment Document, reflecting the reel and frame number where the assignment(s) is recorded and/or reflecting proof of *the date* the assignment was submitted for recordation.

In the Request, Applicant(s) may request that the file be forwarded to Certificates of Correction Branch, for issuance of a Certificate of Correction, if the Request is granted.

Any request under 37 CFR 3.81(b) should be directed to the following address or facsimile number:

By mail: Mail Stop PETITIONS
Commissioner for Patents
Post Office Box 1450
Alexandria, VA 22313-1450

By hand: Customer Service Window
Mail Stop Petitions
Randolph Building
401 Dulany Street
Alexandria, VA 22314

By fax: (703) 872-9306
ATTN: Office of Petitions

If a fee (currently $100) was previously submitted for consideration of a Request for Certificate of Correction, under CFR 1.323, to correct assignment data, , no additional fee is required.

Eva James
For Mary Diggs
Decisions & Certificates
of Correction Branch
(703) 756-1583 or 1580

Steptoe & Johnson
1330 Connecticut Ave., NW
Washington, DC 20036

ej

RECEIVED
CENTRAL FAX CENTER
JUN 23 2009

ATTY. DKT. 28951.5379/D1

IN THE UNITED STATES PATENT AND TRADEMARK OFFICE

In re Application Serial No. 12/054,179

Now U.S. Patent 7,536,770

Issue Date: May 26, 2009

Akihiko YAMAZAKI et al

Title: WINDING METHOD FOR STATOR OF MOTOR

VIA FACSIMILE
(571) 273-8300
ATTN: Office of Petitions

REQUEST UNDER 37 CFR 3.81(b)
TO CORRECT ASSIGNEE NAME
ON ISSUED PATENT

Office of Petitions
Commissioner for Patents
U.S. Patent & Trademark Office
Alexandria, VA 22313-1450

Sir:

Pursuant to 37 CFR 3.81(b), and responsive to the June 15, 2009 (apparently) letter received June 18, 2009 from the Correction Branch, patentees, by their undersigned attorney, hereby respectfully request correction of the assignee name on U.S. Patent 7,536,770, a copy of the first page of which is attached hereto as Appendix A.

Also attached hereto as Appendix B is a copy of the Request for Certificate of Correction Pursuant to 37 CFR 1.323, filed June 5, 2009.

The PTO is hereby authorized to charge the 37 CFR 1.17(h) fee (currently $130) and any other applicable fees, to patentees' attorneys' deposit account No. 19-4293. We note that the fee for the Request for Certificate of Correction was previously authorized (see Appendix B).

It is hereby stated that the failure to include the correct assignee name on the Form PTOL-85B, filed April 20, 2009, was inadvertent.

06/24/2009 JVONG1 00000014 194293 12054179
01 FC:1464 130.00 DA

Serial No. 12/054,179
U.S. Patent 7,536,770
Attorney Docket No. 28951.5379/D1

Also attached hereto as Appendix C is a copy of the March 27, 2008 Notice of Recordation of Assignment Document showing the relevant pages assigning the parent application of this divisional application to be recorded at Reel 020713, Frame 0369. By change of name, co-assignee Matsushita became Panasonic Corporation as already correctly stated on the printed patent (Appendix A).

Patentees/Petitioners hereby again request that the Certificate of Correction (see Appendix B) be issued.

Patentees/Petitioners also hereby request that the official file of this patent be forwarded to the Certificate of Correction Branch for issuance of the Certificate of Correction.

Should anyone in the PTO have any question about this request, they are invited to telephone patentee's attorney at the number listed below.

Respectfully submitted,

Roger W. Parkhurst
Registration No. 25,177

June 23, 2009

STEPTOE & JOHNSON LLP
1330 Connecticut Avenue, NW
Washington, DC 20036-1795
Tel: (202) 429-6420

Attachments: Appendices A-C

Certification of Facsimile Transmission

I hereby certify that this Request Under 37 CFR 3.81(b) to Correct Assignee Name on Issued Patent is being facsimile transmitted to the USPTO (571) 372-3885, on the date indicated below.

Cherrie L. Daigneault	(Depositor's name)
	(Signature)
6/23/9	(Date)

PAGE 2/11 * RCVD AT 6/23/2009 3:37:06 PM [Eastern Daylight Time] * SVR:USPTO-EFXRF-5/0 * DNIS:2738300 * CSID: * DURATION (mm-ss):02-32

US007536770B2

(12) United States Patent
Yamazaki et al.

(10) Patent No.: US 7,536,770 B2
(45) Date of Patent: May 26, 2009

(54) WINDING METHOD FOR STATOR OF MOTOR

(75) Inventors: Akihiko Yamazaki, Fukui (JP); Kenzi Sasaki, Fukui (JP); Yasutake Seki, Fukui (JP); Koh Kajita, Gifu (JP)

(73) Assignee: Panasonic Corporation, Osaka (JP)

(*) Notice: Subject to any disclaimer, the term of this patent is extended or adjusted under 35 U.S.C. 154(b) by 0 days.

(21) Appl. No.: 12/054,179

(22) Filed: Mar. 24, 2008

(65) Prior Publication Data

US 2008/0209713 A1 Sep. 4, 2008

Related U.S. Application Data

(62) Division of application No. 10/529,036, filed as application No. PCT/JP03/12453 on Sep. 29, 2003, now Pat. No. 7,421,774.

(30) Foreign Application Priority Data

Oct. 4, 2002 (JP) 2002-292164

(51) Int. Cl.
H02K 15/00 (2006.01)

(52) U.S. Cl. 29/596; 29/598; 29/605; 29/732; 242/432.1

(58) Field of Classification Search 29/596–598, 29/605–606, 732–737; 242/432.4; 310/42, 310/207; 140/91.1, 91.2
See application file for complete search history.

(56) References Cited

U.S. PATENT DOCUMENTS

4,918,347	A	4/1990	Takaba	310/179
5,090,108	A *	2/1992	Banner et al.	29/596
5,090,110	A	2/1992	Murakoshi et al.	29/596
6,749,144	B2 *	6/2004	Komuro et al.	242/432.5
6,782,600	B2	8/2004	Yamazaki et al.	29/596
7,281,312	B2	10/2007	Sadiku et al.	29/596
7,291,955	B2 *	11/2007	Otsuji	310/194
2002/0047065	A1	4/2002	Kajita	242/432

FOREIGN PATENT DOCUMENTS

JP	2000-270524	9/2000
JP	2001-103716	4/2001
JP	2001-119885	4/2001
JP	2001-339917	12/2001
JP	2002-78300	3/2002
JP	2002-14216	5/2002

* cited by examiner

Primary Examiner—Minh Trinh
(74) *Attorney, Agent, or Firm*—Steptoe & Johnson LLP

(57) ABSTRACT

According to a nozzle winding method of causing a nozzle (41) to pass between adjacent magnetic poles (12) and rotating the nozzle (41) around the magnetic pole (12), winding is carried out until the rotating nozzle (41) interferes with wound coils (201 to 242), so that a high space factor is obtained. Thereafter, according to a cam winding method, winding is carried out in a space remaining in a slot while rotating the nozzle (41) in an area not interfering with the coils (201 to 242) in the slot, thereby achieving winding with a high space factor of coils in the entire space of the slot.

7 Claims, 5 Drawing Sheets

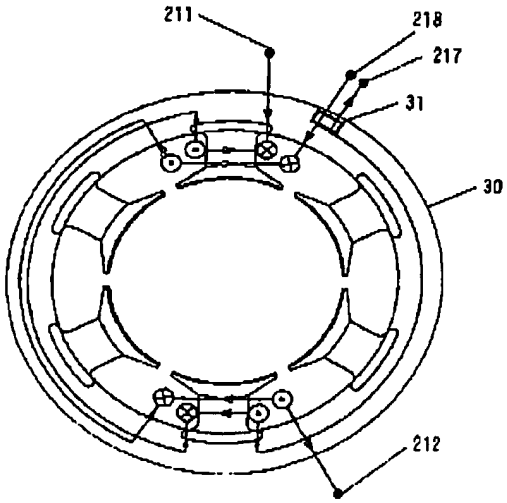

APPENDIX A

RECEIVED
CENTRAL FAX CENTER
JUN 23 2009

ATTY. DKT. 28951.5379 D1

IN THE UNITED STATES PATENT AND TRADEMARK OFFICE

In re Application Serial No. 12/054,179

Now U.S. Patent.: 7,536,770

Issue Date: May 26, 2009

Akihiko YAMAZAKI et al

Title: WINDING METHOD FOR STATOR OF MOTOR

REQUEST FOR CERTIFICATE OF CORRECTION PURSUANT TO 37 CFR 1.323

Commissioner of Patents
P.O. Box 1450
Alexandria, Virginia 22313-1450

ATTN: Certificate of Correction Branch

Sir:

Patentees respectfully request that a Certificate of Correction be issued to correct an error made by applicant, as specified in the attached copy of the Certificate of Correction form (PTO/SB/44).

The requested change is to include in the issued patent the co-assignee, Hayashi Industrial Co., Ltd., Gifu, Japan, which assignee was inadvertently omitted in the assignee designation in the Fees Transmittal PTO Form 85 filed April 20, 2009. Attached is a copy of the Notice Of Recordation and Assignment document recorded in parent application Serial No. 10/529,036 on March 27, 2008 many months before payment of the issue fee for the '770 patent, thereby indicating Hayashi Industrial Co., Ltd. as co-assignee of the '770 patent.

The Commissioner is hereby authorized to charge any fees due, including fees pursuant

APPENDIX B

PAGE 4/11 * RCVD AT 6/23/2009 3:37:06 PM [Eastern Daylight Time] * SVR:USPTO-EFXRF-5/0 * DNIS:2738300 * CSID: * DURATION (mm-ss):02-32

to 37 CFR 1.17(i) and 1.20(a), to Deposit Account 19-4293.

This request fully satisfies 37 CFR 3.81(b), and therefore issuance of a Certificate of Correction is respectfully requested.

Respectfully submitted,

STEPTOE & JOHNSON LLP

Roger W. Parkhurst
Registration No. 25,177

June 5, 2009

1330 Connecticut Avenue, NW
Washington, DC 20036-1795
Tel: (202) 429-6420

ATTY. DKT. 28951.5379 D1

PAGE 5/11 * RCVD AT 6/23/2009 3:37:06 PM [Eastern Daylight Time] * SVR:USPTO-EFXRF-5/0 * DNIS:2738300 * CSID: * DURATION (mm-ss):02-32

PTO/SB/44 (9-07)
Approved for use through 08/31/2010 OMB 0651-0033
U.S. Patent and Trademark Office, U.S. DEPARTMENT OF COMMERCE
Under the Paperwork Reduction Act of 1995, no persons are required to respond to a collection of information unless it displays a valid OMB control number
(Also Form PTO 1050)

UNITED STATES PATENT AND TRADEMARK OFFICE
CERTIFICATE OF CORRECTION

Page 1 of 1

PATENT NO. : 7,536,770

APPLICATION NO.: 12/054,179

ISSUE DATE : May 26, 2009

INVENTOR(S) : Akihiko YAMAZAKI et al

It is certified that an error appears or errors appear in the above-identified patent and that said Letters Patent is hereby corrected as shown below:

(73) Assignees: Panasonic Corporation, Osaka (JP)
Hayashi Industrial Co., Ltd., Gifu (JP)

MAILING ADDRESS OF SENDER (Please do not use customer number below):

STEPTOE & JOHNSON LLP
1330 Connecticut Ave., NW
Washington, DC 20036

This collection of information is required by 37 CFR 1.322, 1.323, and 1.324. The information is required to obtain or retain a benefit by the public which is to file (and by the USPTO to process) an application. Confidentiality is governed by 35 U.S.C. 122 and 37 CFR 1.14. This collection is estimated to take 1.0 hour to complete, including gathering, preparing, and submitting the completed application form to the USPTO. Time will vary depending upon the individual case. Any comments on the amount of time you require to complete this form and/or suggestions for reducing this burden, should be sent to the Chief Information Officer, U.S. Patent and Trademark Office, U.S. Department of Commerce, P.O. Box 1450, Alexandria, VA 22313-1450. DO NOT SEND FEES OR COMPLETED FORMS TO THIS ADDRESS. SEND TO: **Attention Certificate of Corrections Branch, Commissioner for Patents, P.O. Box 1450, Alexandria, VA 22313-1450.**

If you need assistance in completing the form, call 1-800-PTO-9199 and select option 2

UNITED STATES PATENT AND TRADEMARK OFFICE

UNDER SECRETARY OF COMMERCE FOR INTELLECTUAL PROPERTY AND
DIRECTOR OF THE UNITED STATES PATENT AND TRADEMARK OFFICE

MARCH 27, 2008

PTAS

ROGER W. PARKHURST/STEPTOE & JOHNSON LLP
1330 CONNECTICUT AVENUE, N.W.
WASHINGTON, DC 20036-1795

500496594A

Received
MAR 27 2008
Steptoe & Johnson LLP
Docketing Dept.

UNITED STATES PATENT AND TRADEMARK OFFICE
NOTICE OF RECORDATION OF ASSIGNMENT DOCUMENT

THE ENCLOSED DOCUMENT HAS BEEN RECORDED BY THE ASSIGNMENT DIVISION OF THE U.S. PATENT AND TRADEMARK OFFICE. A COMPLETE MICROFILM COPY IS AVAILABLE AT THE ASSIGNMENT SEARCH ROOM ON THE REEL AND FRAME NUMBER REFERENCED BELOW.

PLEASE REVIEW ALL INFORMATION CONTAINED ON THIS NOTICE. THE INFORMATION CONTAINED ON THIS RECORDATION NOTICE REFLECTS THE DATA PRESENT IN THE PATENT AND TRADEMARK ASSIGNMENT SYSTEM. IF YOU SHOULD FIND ANY ERRORS OR HAVE QUESTIONS CONCERNING THIS NOTICE, YOU MAY CONTACT THE EMPLOYEE WHOSE NAME APPEARS ON THIS NOTICE AT 571-272-3350. PLEASE SEND REQUEST FOR CORRECTION TO: U.S. PATENT AND TRADEMARK OFFICE, MAIL STOP: ASSIGNMENT SERVICES BRANCH, P.O. BOX 1450, ALEXANDRIA, VA 22313.

RECORDATION DATE: 03/27/2008

REEL/FRAME: 020713/0369
NUMBER OF PAGES: 4

BRIEF: ASSIGNMENT OF ASSIGNOR'S INTEREST (SEE DOCUMENT FOR DETAILS).
DOCKET NUMBER: 26951.5379

ASSIGNOR:
MATSUSHITA ELECTRIC INDUSTRIAL CO., LTD.

DOC DATE: 06/01/2007

ASSIGNEE:
HAYASHI INDUSTRIAL CO., LTD.
1363-1 SENDANBAYASHI
NAKATSUGAWA-SHI, GIFU, JAPAN

509-9131

SERIAL NUMBER: 10529036
PATENT NUMBER:
TITLE: METHOD OF WINDING STATOR IN MOTOR

FILING DATE: 03/21/2005
ISSUE DATE:

P.O. Box 1450, Alexandria, Virginia 22313-1450 - www.uspto.gov

APPENDIX C

020713/0369 PAGE 2

ASSIGNMENT SERVICES BRANCH
PUBLIC RECORDS DIVISION

PATENT ASSIGNMENT

WHEREAS MATUSHITA ELECTRIC INDUSTRIAL CO., LTD., (hereinafter "Assignor"), a corporation organized under the laws of Japan, and having a place of business at 1006, Oaza Kadoma, Kadoma-shi, Osaka, 571-8501 Japan, is the owner of U.S. patent application Serial No. 10/529,036, filed March 24, 2005, and the invention disclosed and claimed therein, hereinafter called the "Patent Property";

WHEREAS, said Assignor has desired to assign an undivided fifty percent (50%) of its right, title and interest in said Patent Property and any continuations, divisions, patents, reissues, certificates of re-examination, extensions thereof, and corresponding ownership rights, to HAYASHI INDUSTRIAL CO., LTD., (hereinafter "Assignee"), a corporation organized under the laws of Japan and having a place of business at 1363-1, Sendanbayashi, Nakatsugawa-shi, Gifu, 509-9131 Japan;

Now, To All Whom It May Concern: Be it known that for and in consideration of good and valuable considerations transferred to said Assignor, the receipt of which is hereby acknowledge, Assignor has sold, assigned, transferred and set over, and does hereby sell, assign, transfer and set over, unto Assignee its successors and assigns, an undivided fifty percent (50%) of Assignor's heretofore undivided rights, title and interest in and to said Patent Property, and any divisions, continuations, patents, reissues, re-examination certificates or extensions thereof; the same to be held and enjoyed jointly by Assignor and said Assignee, and their respective successors and assigns, as fully and entirely as the same would have been held and enjoyed by Assignor alone had this assignment not been made, together with any and all claims for damages by reason of past infringement of said Patent Property with the right to sue for, and collect such

damages, for Assignor's and Assignee's joint use and for the use of their respective successors, assigns and other legal representatives.

The Assignor agrees to execute all papers reasonably necessary in connection with said Patent Property and any continuing, divisional or reissue applications or re-examinations thereof, should the Assignee deem same necessary or reasonably expedient to confirm the effect of this assignment.

The Assignor further agrees to execute all papers and documents and perform any act that as Assignor and Assignee may agree is reasonably necessary in connection with claims or provisions of any international convention or similar agreement affecting said Patent Property.

The Assignor hereby represents that it has the full right to convey the interest herein assigned, and that it has not executed and will not execute, any agreement in conflict herewith.

PAGE 10/11 * RCVD AT 6/23/2009 3:37:06 PM [Eastern Daylight Time] * SVR:USPTO-EFXRF-5/0 * DNIS:2738300 * CSID: * DURATION (mm-ss):02-32

The Assignor grants the firm of Steptoe & Johnson LLP the power to insert on this Assignment any further identification that may be necessary or desirable to comply with the rules of the U.S. Patent and Trademark Office for recording of this document.

June 4, 2007

MATSUSHITA ELECTRIC INDUSTRIAL CO, LTD.

By: Hiroki Naito
Director, IP Development Center
Authorized Signing Officer

WITNESSES:

(signature) Keiji Hosono
(name) KEIJI HOSONO

June 4, 2007

(signature) Akihiro Kurose
(name) AKIHIRO KUROSE

June 4, 2007

PAGE 11/11 * RCVD AT 6/23/2009 3:37:06 PM [Eastern Daylight Time] * SVR:USPTO-EFXRF-5/0 * DNIS:2738300 * CSID: * DURATION (mm-ss):02-32

UNITED STATES PATENT AND TRADEMARK OFFICE

Commissioner for Patents
United States Patent and Trademark Office
P.O. Box 1450
Alexandria, VA 22313-1450
www.uspto.

MAILED
APR 26 2010
OFFICE OF PETITIONS

STEPTOE & JOHNSON LLP
1330 CONNECTICUT AVE., NW
WASHINGTON, DC 20036

In re Patent No. 7,536,770	:	
Issue Date: May 26, 2009	:	
Application No. 12/054,179	:	DECISION ON PETITION
Filed: March 24, 2008	:	
Attorney Docket No. 28954.5379/D1	:	

This is a decision on the petition, filed, June 26, 2009, which is being treated as a request under 37 CFR 3.81(b)[1] to correct the assignee's name on the Fee(s) Transmittal form PTOL-85(b) by way of a certificate of correction in the patent.

The request is **GRANTED**.

Petitioner states that the correct assignee names are Panasonic Corporation and Hayashi Industrial Co., LTD. Petitioner further states that the assignee's name was not correctly identified on the Fee(s) Transmittal form PTOL-85(b) at the time of payment of the issue fee. Accordingly, petitioner requests that a certificate of correction be issued to reflect the correct assignee on the front page of the Letters Patent.

37 CFR 3.81(b), effective June 25, 2004, reads:

> *After payment of the issue fee:* Any request for issuance of an application in the name of the assignee submitted after the date of payment of the issue fee, and any request for a patent to be corrected to state the name of the assignee, must state that the assignment was submitted for recordation as set forth in § 3.11 before issuance of the patent, and must include a request for a certificate of correction under § 1.323 of this chapter (accompanied by the fee set forth in § 1.20(a) and the processing fee set forth in § 1.17(i) of this chapter.

The request was accompanied by a certificate of correction (and fee) as required by 3.81(b). Further, Office assignment records reflect that Panasonic Corporation and Hayashi Industrial Co., LTD were the assignee of record before issuance of the patent. Accordingly, as the request complies with the provisions of 37 CFR 3.81(b), it is appropriate for a certificate of correction to be processed.

---

[1] *See* MPEP 1309, subsection II; and Official Gazette of June 22, 2004.

Petitioner should note that the Certificate of Correction fee of $100 will be charged to petitioner's deposit account as authorized.

Inquiries concerning this decision should be directed to Alicia Kelley at (571) 272-6059. Any questions concerning the issuance of a certificate of correction should be directed to the Certificates of Correction Branch at (571) 272-4200.

This matter is being referred to the Certificates of Correction Branch for processing of a certificate of correction.

Carl Friedman
Petitions Examiner
Office of Petitions

PTO/SB/130 (03-08)
Approved for use through 03/31/2008. OMB 0651- 0031
U.S. Patent and Trademark Office; U.S. DEPARTMENT OF COMMERCE
Under the Paperwork Reduction Act of 1995, no persons are required to respond to a collection of information unless it contains a valid OMB control number

PETITION TO MAKE SPECIAL BASED ON AGE FOR ADVANCEMENT OF EXAMINATION UNDER 37 CFR 1.102(c)(1)

Application Information

Application Number	12/054,199	Confirmation Number	5681	Filing Date	2008-03-24
Attorney Docket Number (optional)	RJL-101	Art Unit		Examiner	
First Named Inventor	Raymond John Lee				
Title of Invention	Rotary Shock Absorber				

Attention: Office of Petitions

An application may be made special for advancement of examination upon filing of a petition showing that the applicant is 65 years of age, or more. No fee is required with such a petition. See 37 CFR 1.102(c)(1) and MPEP 708.02 (IV).

APPLICANT HEREBY PETITIONS TO MAKE SPECIAL FOR ADVANCEMENT OF EXAMINATION IN THIS APPLICATION UNDER 37 CFR 1.102(c)(1) and MPEP 708.02 (IV) ON THE BASIS OF THE APPLICANT'S AGE.

A grantable petition requires one of the following items:
(1) Statement by one named inventor in the application that he/she is 65 years of age, or more; or
(2) Certification by a registered attorney/agent having evidence such as a birth certificate, passport, driver's license, etc. showing one named inventor in the application is 65 years of age, or more.

Name of Inventor who is 65 years of age, or older

Given Name	Middle Name	Family Name	Suffix
Raymond	John	Lee	

A signature of the applicant or representative is required in accordance with 37 CFR 1.33 and 10.18.
Please see 37 CFR 1.4(d) for the format of the signature.

Select (1) or (2) :

○ (1) I am an inventor in this application and I am 65 years of age, or more.

◉ (2) I am an attorney or agent registered to practice before the Patent and Trademark Office, and I certify that I am in possession of evidence, and will retain such in the application file record, showing that the inventor listed above is 65 years of age, or more.

Signature	/Ray K. Shahani, Esq./	Date (YYYY-MM-DD)	2008-03-24
Name	Ray K. Shahani, Esq.	Registration Number	37554

PTO/SB/130 (03-08)
Approved for use through 03/31/2008. OMB 0651- 0031
U.S. Patent and Trademark Office; U.S. DEPARTMENT OF COMMERCE
Under the Paperwork Reduction Act of 1995, no persons are required to respond to a collection of information unless it contains a valid OMB control number

Privacy Act Statement

The Privacy Act of 1974 (P.L. 93-579) requires that you be given certain information in connection with your submission of the attached form related to a patent application or patent. Accordingly, pursuant to the requirements of the Act, please be advised that: (1) the general authority for the collection of this information is 35 U.S.C. 2(b)(2); (2) furnishing of the information solicited is voluntary; and (3) the principal purpose for which the information is used by the U.S. Patent and Trademark Office is to process and/or examine your submission related to a patent application or patent. If you do not furnish the requested information, the U.S. Patent and Trademark Office may not be able to process and/or examine your submission, which may result in termination of proceedings or abandonment of the application or expiration of the patent.

The information provided by you in this form will be subject to the following routine uses:

1. The information on this form will be treated confidentially to the extent allowed under the Freedom of Information Act (5 U.S.C. 552) and the Privacy Act (5 U.S.C. 552a). Records from this system of records may be disclosed to the Department of Justice to determine whether the Fr eedom of Information Act requires disclosure of these records.

2. A record from this system of records may be disclosed, as a routine use, in the course of presenting evidence to a court, magistrate, or administrative tribunal, including disclosures to opposing counsel in the course of settlement negotiations.

3. A record in this system of records may be disclosed, as a routine use, to a Member of Congress submitting a request involving an individual, to whom the record pertains, when the individual has requested assistance from the Member with respect to the subject matter of the record.

4. A record in this system of records may be disclosed, as a routine use, to a contractor of the Agency having need for the information in order to perform a contract. Recipients of information shall be required to comply with the requirements of the Privacy Act of 1974, as amended, pursuant to 5 U.S.C. 552a(m).

5. A record related to an International Application filed under the Patent Cooperation Treaty in this system of records may be disclosed, as a routine use, to the International Bureau of the World Intellectual Property Organization, pursuant to the Patent Cooperation Treaty.

6. A record in this system of records may be disclosed, as a routine use, to another federal agency for purposes of National Security review (35 U.S.C. 181) and for review pursuant to the Atomic Energy Act (42 U.S.C. 218(c)).

7. A record from this system of records may be disclosed, as a routine use, to the Administrator, General Services, or his/her designee, during an inspection of records conducted by GSA as part of that agency's responsibility to recommend improvements in records management practices and programs, under authority of 44 U.S.C. 2904 and 2906. Such disclosure shall be made in accordance with the GSA regulations governing inspection of records for this purpose, and any other relevant (i.e., GSA or Commerce) directive. Such disclosure shall not be used to make determinations about indivi duals.

8. A record from this system of records may be disclosed, as a routine use, to the public after either publication of the application pursuant to 35 U.S.C. 122(b) or issuance of a patent pursuant to 35 U.S.C. 151. Further, a record may be disclosed, subject to the limitations of 37 CFR 1.14, as a routine use, to the public if the record was filed in an application which became abandoned or in which the proceedings were terminated and which application is referenced by either a published application, an application open to public inspections or an issued patent.

9. A record from this system of records may be disclosed, as a routine use, to a Federal, State, or local law enforcement agency, if the USPTO becomes aware of a violation or potential violation of law or regulation.

UNITED STATES PATENT AND TRADEMARK OFFICE

Commissioner for Patents
United States Patent and Trademark Office
P.O. Box 1450
Alexandria, VA 22313-1450
www.uspto.gov

In re Application of :
Raymond J. Lee :

Application No. 12054199 :DECISION ON PETITION TO MAKE SPECIAL
Filed: :UNDER 37 CFR 1.102(c)(1)
:

Attorney Docket No. RJL-101

This is a decision on the electronic petition under 37 CFR 1.102 (c)(1) ,filed 24-MAR-2008 to make the above-identified application special based on applicant's age as set forth in MPEP § 708.02, Section IV.

The petition is **GRANTED**.

A grantable petition to make an application special under 37 CFR 1.102(c)(1), MPEP § 708.02, Section IV: Applicant's Age must include a statement by applicant or a registered practitioner having evidence that applicant is at least 65 years of age. No fee is required.

Accordingly, the above-identified application has been accorded “special” status and will be taken up for action by the examiner upon the completion of all pre-examination processing.

Telephone inquires concerning this electronic decision should be directed to the Electronic Business Center at 866-217-9197.

All other inquires concerning either the examination or status of the application should be directed to the Technology Center.

UNITED STATES PATENT and TRADEMARK OFFICE
UNDER SECRETARY OF COMMERCE FOR INTELLECTUAL PROPERTY AND
DIRECTOR OF THE UNITED STATES PATENT AND TRADEMARK OFFICE
WASHINGTON, D.C. 20231
WWW.USPTO.GOV

APR 14 2008

In re Application of Cormier et al. Serial No.: 12/054,213 Filed: March 24, 2008 For: METHOD OF DENITRIFYING WASTEWATER	: : : : : :	DECISION ON PETITION UNDER 708.02, VI

This is in response to the petition filed March 28, 2008, requesting that the above identified application be granted Special Status under Section 708.02, VI of the MPEP and 37 CFR 1.102c.

The petition has been considered and found to comply with the requirements set forth under the above noted section. Accordingly, the petition is granted.

The petition to **GRANTED**.

William Krynski, Quality Assurance Specialist
Technology Center 1700
Chemical and Materials Engineering

1 5 JUL 2009

UNITED STATES PATENT AND TRADEMARK OFFICE

Commissioner for Patents
United States Patent and Trademark Office
P.O. Box 1450
Alexandria, VA 22313-1450
www.uspto.gov

EMERGING STRATEGIES, LLP
7416 LYNNHURST STREET
CHEVY CHASE MD 20815-3102

In re Application of Murphy J. CORMIER et al. U.S. Application No.: 12/054,213 Date of Receipt: 24 March 2008 Attorney Docket No.: 0004.0046 For: METHOD OF DENITRIFYING WASTEWATER	: : : : : : : :	DECISION ON PETITION

This is a decision on the petition under 37 CFR 1.181, filed 05 January 2009 to treat the above-identified application as a divisional application filed under 35 USC 111(a) and to subsequently issue a corrected filing receipt and a Notice of Publication.

The decision on petition is **HELD IN ABEYANCE.**

On 24 March 2008, petitioners filed the instant application including, *inter alia*, an application data sheet including priority data designating the instant application as a divisional of application number 11/722,010.

On 05 January 2009, petitioners filed a request in parent application 11/722,010 to have that application treated as a 35 USC 371 national stage entry of international application PCT/US07/68288.

As USPTO records cannot be updated to reflect that the instant application is a divisional of 11/722,010 until the status of that application as a 35 USC 371 or a 35 USC 111(a) filing has been determined. As such petitioners' request cannot be granted at this time.

Petitioners are invited to renew the instant petition once the status of parent application 11/722,010 has been determined. If no reply is received in the parent application, the contents of that application will be merged with those of instant application.

Any further correspondence with respect to this matter should be addressed to Mail Stop PCT, Commissioner for Patents, Office of PCT Legal Administration, P.O. Box 1450, Alexandria, VA 22313-1450.

Telephone inquiries concerning this decision may be directed to BethAnne Dayoan at (571) 272-3209.

BethAnne Dayoan
Detailee
Office of PCT Legal Administration

Rafael Bacares
PCT Legal Examiner
Office of PCT Legal Administration

UNITED STATES PATENT AND TRADEMARK OFFICE

Commissioner for Patents
United States Patent and Trademark Office
P.O. Box 1450
Alexandria, VA 22313-1450
www.uspto.gov

VERIZON
PATENT MANAGEMENT GROUP
1320 NORTH COURT HOUSE ROAD
9TH FLOOR
ARLINGTON VA 22201-2909

MAILED

FEB 20 2009

OFFICE OF PETITIONS

In re Application of Somesh Sharma Application No.12/054,243 Filed: March 24, 2008 Attorney Docket No. 20080062	: : : : :	DECISION ON PETITION

This is a decision on the petition under the unintentional provisions of 37 CFR 1.137(b), filed January 15, 2009, to revive the above-identified application.

The petition is **GRANTED**.

The petition satisfies the conditions for revival pursuant to the provisions of 37 CFR 1.137(b) in that (1) the reply in the form of replacement drawings; (2) the petition fee; and (3) the required statement of unintentional delay have been received. Accordingly, the reply to the Notice mailed April 8, 2008, is accepted as having been unintentionally delayed.

Telephone inquiries concerning this decision should be directed to the undersigned at (571) 272-3208.

This application is being referred to the Office of Patent Application Processing for pre-examination processing.

Karen Creasy

Karen Creasy
Petitions Examiner
Office of Petitions

UNITED STATES PATENT AND TRADEMARK OFFICE

Commissioner for Patents
United States Patent and Trademark Office
P.O. Box 1450
Alexandria, VA 22313-1450
www.uspto.gov

VISHAY/SILICONIX C/O MURABITO, HAO & BARNES LLP
2 N. MARKET STREET
THIRD FLOOR
SAN JOSE CA 95113

MAILED

MAY 19 2009

OFFICE OF PETITIONS

In re Application of	:	
Andrea Irace, et al.	:	
Application No. 12/054,291	:	DECISION ON PETITION
Filed: March 24, 2008	:	
Attorney Docket No. VISH-IR231	:	

This is a decision on the petition under the unintentional provisions of 37 CFR 1.137(b), filed March 23, 2009, to revive the above-identified application.

The petition is **GRANTED**.

The application became abandoned for failure to reply in a timely manner to the Notice to File Missing Parts of Nonprovisional Application (Notice), mailed April 7, 2008. The Notice set a period for reply of two (2) months from the mail date of the Notice. A four (4) month extension of time under the provisions of 37 CFR 1.136(a) were obtained. Accordingly, the application became abandoned on October 8, 2008. The Notice of Abandonment was mailed January 21, 2009.

The petition satisfies the requirements of 37 CFR 1.137(b) in that petitioner has supplied (1) the reply in the form of new drawings, an oath and $130 surcharge filed November 6, 2008, (2) the petition fee of $1,620, and (3) a proper statement of unintentional delay.

Telephone inquiries concerning this decision should be directed to Terri Williams at (571)272-2991.

This application is being referred to the Office of Patent Application Processing for appropriate action on the reply received.

Chris Bottorff
Petitions Examiner
Office of Petitions

UNITED STATES PATENT AND TRADEMARK OFFICE

Commissioner for Patents
United States Patent and Trademark Office
P.O. Box 1450
Alexandria, VA 22313-1450
www.uspto.gov

MAILED

MAY 24 2010

OFFICE OF PETITIONS

YAHOO C/O MOFO PALO ALTO
755 PAGE MILL ROAD
PALO ALTO, CA 94304

In re Application of	:	
Elizabeth CHURCHILL, et al	:	
Application No. 12/054,305	:	DECISION ON PETITION
Filed: March 24, 2008	:	TO WITHDRAW
Attorney Docket No. 324212023000	:	FROM RECORD
	:	

This is a decision on the Request to Withdraw as attorney or agent of record under 37 C.F.R. § 1.36(b), filed March 25, 2010.

The request is **NOT APPROVED because it is moot**.

A review of the file record indicates that the power of attorney to Robert A. Saltzberg and all the attorneys of record, has been revoked by the assignee of the patent application on April 19, 2010. Accordingly, the request to withdraw under 37 C.F.R. § 1.36(b) is moot.

Telephone inquires concerning this decision should be directed to undersigned at 571-272- 6735.

/dcg/
Diane C. Goodwyn
Petitions Examiner
Office of Petitions

cc: ROBERT A. SALTZBERG
MORRISON & FOERSTER LLP
425 MARKET STREET
SAN FRANCISCO CA 94105-2482

UNITED STATES PATENT AND TRADEMARK OFFICE

Commissioner for Patents
United States Patent and Trademark Office
P.O. Box 1450
Alexandria, VA 22313-1450
www.uspto.gov

ROSENBAUM & ASSOCIATES, P.C.
650 DUNDEE ROAD
SUITE #380
NORTHBROOK IL 60062

COPY MAILED
SEP 23 2008
OFFICE OF PETITIONS

In re Application of	:
Utermohlen, et al.	: DECISION REFUSING STATUS
Application No. 12/054,325	: UNDER 37 CFR 1.47(a)
Filed: March 24, 2008	:
Atty. Dkt. No.: 6052-017	:

This decision is in response to the petition under 37 CFR 1.47(a) filed September 11, 2008.

The petition under 37 CFR 1.47(a) is **DISMISSED**.

Petitioners are given TWO MONTHS from the mailing date of this decision to reply, correcting the below-noted deficiencies. Any reply should be entitled "Request for Reconsideration of Petition Under 37 CFR 1.47(a)," and should only address the deficiencies noted herein. The reply under 37 CFR 1.47(a) may include an oath or declaration executed by the non-signing inventors. Any extensions of time will be governed by 37 CFR 1.136(a).

The above-identified application was filed March 24, 2008 without an executed oath or declaration. Accordingly, a Notice to File Missing Parts of Nonprovisional Application (Notice) was mailed April 11, 2008. The Notice required, *inter alia*, a surcharge and an executed oath or declaration.

A grantable petition under 37 CFR 1.47(a) requires: (1) proof that the non-signing inventor cannot be reached or refuses to sign the oath or declaration after having been presented with the application papers (specification, claims and drawings); (2) an acceptable oath or declaration in compliance with 35 U.S.C. §§ 115 and 116; (3) the petition fee; and (4) a statement of the last known address of the non-signing inventor.

The instant petition fails to comply with item (2). An acceptable oath or declaration for the patent application in compliance with 37 CFR 1.63 and 1.64 has not been presented. The declaration presented is unacceptable as it fails to comply with 37 CFR 1.63(b)(3). Effective June 1, 2008, the Office will no longer accept as complying with 37 CFR 1.63(b)(3) an oath or

declaration that does not acknowledge a duty to disclose information material to patentability as defined in 37 CFR 1.56. All oaths or declarations filed on or after June 1, 2008, are required to include the language expressly set forth in 37 CFR 1.63, including that in 37 CFR 1.63(b)(3), i.e., must state that "the person making the oath or declaration acknowledges the duty to disclose to the Office all information known to the person to be material to patentability as defined in § 1.56." *See*, 1327 O.G. 45.

Any renewed petition must be accompanied by a newly executed oath or declaration in compliance with 37 CFR 1.63. *See* MPEP 409.03(b) and 37 CFR 1.63.

Further correspondence with respect to this matter should be addressed as follows:

By mail: Mail Stop Petition
Commissioner for Patents
P.O. Box 1450
Alexandria, VA 22313-1450

By facsimile: (571) 273-8300

By hand: U.S. Patent and Trademark Office
Customer Service Window
Mail Stop Petition
Randolph Building
401 Dulany Street
Alexandria, VA 22314

Telephone inquiries related to this decision may be directed to the undersigned at (571) 272-3205.

Alesia M. Brown
Petitions Attorney
Office of Petitions

UNITED STATES PATENT AND TRADEMARK OFFICE

Commissioner for Patents
United States Patent and Trademark Office
P.O. Box 1450
Alexandria, VA 22313-1450
www.uspto.gov

ROSENBAUM & ASSOCIATES, P.C.
650 DUNDEE ROAD
SUITE #380
NORTHBROOK IL 60062

COPY MAILED

MAR 3 1 2009

OFFICE OF PETITIONS

In re Application of	:
Utermohlen, et al.	: DECISION GRANTING STATUS
Application No. 12/054,325	: UNDER 37 CFR 1.47(a)
Filed: March 24, 2008	:
Atty. Dkt. No.: 6052-017	:

This decision is in response to the renewed petition under 37 CFR 1.47(a) filed February 23, 2009.

The petition under 37 CFR 1.47(a) is **GRANTED**.

Petitioners have shown that the non-signing inventors have refused to join in the filing of the above-identified application after having been presented with the complete application papers.

The application and papers have been reviewed and found in compliance with 37 CFR 1.47(a). This application is hereby accorded Rule 1.47(a) status.

As provided in 37 CFR 1.47(c), this Office will forward notice of this application's filing to the non-signing inventor at the address given in the petition. Notice of the filing of this application will also be published in the Official Gazette.

This application is being referred to the Office of Initial Patent Examination for pre-examination processing.

Telephone inquiries regarding this decision should be directed to the undersigned at (571) 272-3205.

/ALESIA M. BROWN/

Alesia M. Brown
Petitions Attorney
Office of Petitions

UNITED STATES PATENT AND TRADEMARK OFFICE

Commissioner for Patents
United States Patent and Trademark Office
P.O. Box 1450
Alexandria, VA 22313-1450
www.uspto.gov

Joseph G. Utermohlen
6568 North Calle Sin Nombre
Tucson, Arizona 85718

COPY MAILED

MAR 3 1 2009

OFFICE OF PETITIONS

In re Application of
Utermohlen, et al.
Application No. 12/054,325
Filed: March 24, 2008
Atty. Dkt. No.: 6052-017

Dear Sir:

You are named as a joint inventor in the above-identified United States patent application, filed under the provisions of 35 U.S.C. 116 (United States Code), and 37 CFR 1.47(a), Rules of Practice in Patent Cases. Should a patent be granted on the application you will be designated therein as a joint inventor.

As a named inventor you are entitled to inspect any paper in the file wrapper of the application, order copies of all or any part thereof (at a prepaid cost per 37 CFR 1.19) or make your position of record in the application. Alternatively, you may arrange to do any of the preceding through a registered patent attorney or agent presenting written authorization from you. If you care to join the application, counsel of record (see below) would presumably assist you. Joining the application would entail the filing of an appropriate oath or declaration by you pursuant to 37 CFR 1.63.

Telephone inquiries regarding this communication should be directed to the undersigned at (571) 272-3205. Requests for information regarding your application should be directed to the File Information Unit at (703) 308-2733. Information regarding how to pay for and order a copy of the application, or a specific paper in the application, should be directed to the Certification Division at (571) 272-3150 or 1 (800) 972-6382 (outside the Washington, DC area).

Alesia M. Brown
Petitions Attorney
Office of Petitions

cc: ROSENBAUM & ASSOCIATES, P.C.
650 DUNDEE ROAD
SUITE #380
NORTHBROOK IL 60062

UNITED STATES PATENT AND TRADEMARK OFFICE

Commissioner for Patents
United States Patent and Trademark Office
P.O. Box 1450
Alexandria, VA 22313-1450
www.uspto.gov

Michael E. Hogan
2122 East Adams Street
Tucson, Arizona 85716

COPY MAILED

MAR 3 1 2009

OFFICE OF PETITIONS

In re Application of
Utermohlen, et al.
Application No. 12/054,325
Filed: March 24, 2008
Atty. Dkt. No.: 6052-017

Dear Sir:

You are named as a joint inventor in the above-identified United States patent application, filed under the provisions of 35 U.S.C. 116 (United States Code), and 37 CFR 1.47(a), Rules of Practice in Patent Cases. Should a patent be granted on the application you will be designated therein as a joint inventor.

As a named inventor you are entitled to inspect any paper in the file wrapper of the application, order copies of all or any part thereof (at a prepaid cost per 37 CFR 1.19) or make your position of record in the application. Alternatively, you may arrange to do any of the preceding through a registered patent attorney or agent presenting written authorization from you. If you care to join the application, counsel of record (see below) would presumably assist you. Joining the application would entail the filing of an appropriate oath or declaration by you pursuant to 37 CFR 1.63.

Telephone inquiries regarding this communication should be directed to the undersigned at (571) 272-3205. Requests for information regarding your application should be directed to the File Information Unit at (703) 308-2733. Information regarding how to pay for and order a copy of the application, or a specific paper in the application, should be directed to the Certification Division at (571) 272-3150 or 1 (800) 972-6382 (outside the Washington, DC area).

Alesia M. Brown
Petitions Attorney
Office of Petitions

cc: ROSENBAUM & ASSOCIATES, P.C.
650 DUNDEE ROAD
SUITE #380
NORTHBROOK IL 60062

UNITED STATES PATENT AND TRADEMARK OFFICE

Commissioner for Patents
United States Patent and Trademark Office
P.O. Box 1450
Alexandria, VA 22313-1450
www.uspto.gov

ROSENBAUM & SILVERT, P.C.
1480 TECHNY ROAD
NORTHBROOK IL 60062

MAILED

MAY 1 0 2010

OFFICE OF PETITIONS

In re Application of	:	
UTERMOHLEN, Joseph G. et al.	:	
Application No. 12/054,325	:	DECISION ON PETITION
Filed: March 24, 2008	:	TO WITHDRAW
Attorney Docket No. **6052-017**	:	FROM RECORD
	:	

This is a decision on the Request to Withdraw as attorney or agent of record under 37 C.F.R. § 1.36(b), filed March 19, 2010.

The request is **NOT APPROVED**.

The Office will no longer accept address changes to a new practitioner or law firm filed with a Request, absent the filing of a power of attorney to the new representative. The Office will either change the correspondence address of record to the most current address information provided for the assignee of the entire interest who properly became of record under 37 CFR 3.71 or, if no assignee of the entire interest has properly been made of record under 37 CFR 3.71, the most current address information provided for the first named inventor.

Accordingly, the request to withdraw from record cannot be approved because the request to change the correspondence address is not that of: (1) the first named inventor; or (2) an assignee of the entire interest under 37 C.F.R 3.71 who has properly intervened.

If an assignee has intervened in this application, then a Statement under 37 CFR 3.73(b) or a copy of the actual assignment must be submitted with a renewed request.

All future communications from the Office will continue to be directed to the above-listed address until otherwise notified by applicant.

Telephone inquiries concerning this decision should be directed to Tredelle Jackson at 571-272- 2783.

/Tredelle D. Jackson/
Paralegal Specialist
Office of Petitions

cc: **ARGYLLA TECHNOLOGIES, INC.**
P.O. BOX 26906
TUCSON AZ 85726

UNITED STATES PATENT AND TRADEMARK OFFICE

Commissioner for Patents
United States Patent and Trademark Office
P.O. Box 1450
Alexandria, VA 22313-1450
www.uspto.gov

MORRISON & FOERSTER LLP
755 PAGE MILL RD
PALO ALTO CA 94304-1018

COPY MAILED
MAR 09 2009
OFFICE OF PETITIONS

In re Application of :
Merissert-Coffinteres, et al. :
Application No. 12/054,344 : DECISION
Filed/Deposited: 24 March, 2008 :
Attorney Docket No. 432192000102 :

This is a decision on the petition filed on 26 January, 2009, considered as a petition under 37 C.F.R. §1.181 (no fee) requesting withdrawal of the holding of abandonment in the above-identified application.

The petition under 37 C.F.R. §1.181 is **GRANTED**.

As to the Request to Withdraw
the Holding of Abandonment

Petitioners always are directed to the Commentary at MPEP §711.03(c)(I) for guidance as to the proper showing and timeliness requirements for relief under 37 C.F.R. §1.181. Petitioners must, *inter alia*, provide statements and documentary support as set forth in the Commentary at MPEP §711.03(c)(I).

BACKGROUND

The record reflects as follows:

Following Petitioner's deposit of the instant application on 24 March, 2008, on 7 April, 2008, the Office mailed the Notice to File Corrected Application Papers (replacement drawings) with reply due absent extension of time on or before 7 June, 2008.

On 7 November, 2008, Petitioner submitted a request and fee for extension of time and a reply in the form of replacement drawings.

The Office mailed the Notice of Abandonment on 26 November, 2008.

On 26 January, 2009, Petitioner filed, *inter alia*, a petition pursuant to 37 C.F.R. §1.181and an averment that a timely reply in the form of replacement drawings was submitted on 7 November, 2008, request and fee for extension of time, which averment Petitioner supports with a copy of the submission (replacement drawings) and a copy of the date-stamped ("07-NOV-2008 *** 17"05:36") Electronic Acknowledgement Receipt, consistent with the guidance in the Commentary at MPEP §711.03(c)(I).

The discussion at MPEP 711.03(c)(I) provides in pertinent part:

***

> 37 C.F.R. §1.10(c) through §1.10(e) and §1.10(g) set forth procedures for petitioning the Director of the USPTO to accord a filing date to correspondence as of the date of deposit of the correspondence as "Express Mail." A petition to withdraw the holding of abandonment relying upon a timely reply placed in "Express Mail" must include an appropriate petition under 37 C.F.R. §1.10(c), (d), (e), or (g) (see MPEP §513). When a paper is shown to have been mailed to the Office using the "Express Mail" procedures, the paper must be entered in PALM with the "Express Mail" date.
>
> Similarly, applicants may establish that a reply was filed with a postcard receipt that properly identifies the reply and provides *prima facie* evidence that the reply was timely filed. See MPEP §503. For example, if the application has been held abandoned for failure to file a reply to a first Office action, and applicant has a postcard receipt showing that an amendment was timely filed in response to the Office action, then the holding of abandonment should be withdrawn upon the filing of a petition to withdraw the holding of abandonment. When the reply is shown to have been timely filed based on a postcard receipt, the reply must be entered into PALM using the date of receipt of the reply as shown on the post card receipt.
>
> Where a certificate of mailing under 37 C.F.R. §1.8, but not a postcard receipt, is relied upon in a petition to withdraw the holding of abandonment, see 37 C.F.R. §1.8(b) and MPEP §512. As stated in 37 C.F.R. §1.8(b)(3) the statement that attests to the previous timely mailing or transmission of the correspondence must be on a personal knowledge basis, or to the satisfaction of the Director of the USPTO. If the statement attesting to the previous timely mailing is not made by the person who signed the Certificate of Mailing (i.e., there is no personal knowledge basis), then the statement attesting to the previous timely mailing should include evidence that supports the conclusion that the correspondence was actually mailed (e.g., copies of a mailing log establishing that correspondence was mailed for that application). When the correspondence is shown to have been timely filed based on a certificate of mailing, the correspondence is entered into PALM with the actual date of receipt (i.e., the date that the duplicate copy of the papers was filed with the statement under 37 C.F.R. §1.8).
>
> 37 C.F.R. §1.8(b) also permits applicant to notify the Office of a previous mailing or transmission of correspondence and submit a statement under 37 C.F.R. §1.8(b)(3) accompanied by a duplicate copy of the correspondence when a reasonable amount of time (e.g., more than one month) has elapsed from the time of mailing or transmitting of the correspondence. Applicant does not have to wait until the application becomes abandoned before notifying the Office of the previous mailing or transmission of the correspondence. Applicant should check the

private Patent Application Information Retrieval (PAIR) system for the status of the correspondence before notifying the Office. See MPEP §512. [1]

***

Out of an abundance of caution, Petitioners always are reminded that the filing of a petition under 37 C.F.R. §1.181 does not toll any periods that may be running any action by the Office and a petition seeking relief under the regulation must be filed within two (2) months of the act complained of (see: 37 C.F.R. §1.181(f)), and that those registered to practice and all others who make representations before the Office must inquire into the underlying facts of representations made to the Office and support averments with the appropriate documentation–since all owe to the Office the continuing duty to disclose.[2]

The availability of applications and application papers online to applicants/practitioners who diligently associate their Customer Number with the respective application(s) now provides an applicant/practitioner on-demand information as to events/transactions in an application.

STATUTES, REGULATIONS

Congress has authorized the Commissioner to "revive an application if the delay is shown to the satisfaction of the Commissioner to have been "unavoidable." 35 U.S.C. §133 (1994). And the regulations at 37 C.F.R. §1.137(a) and (b) set forth the requirements for a Petitioner to revive a previously unavoidably or unintentionally, respectively, abandoned application.[3],[4]

Moreover, the Office has set forth in the Commentary at MPEP §711.03(c)(I) the showing and timeliness requirements for a proper showing for relief under 37 C.F.R. §1.181 in these matters.

---

[1] *See*: MPEP §711.03(c) (I)(B).

[2] See supplement of 17 June, 1999. The Patent and Trademark Office is relying on Petitioner's duty of candor and good faith and accepting a statement made by Petitioner. See Changes to Patent Practice and Procedure, 62 Fed. Reg. at 53160 and 53178, 1203 Off. Gaz. Pat. Office at 88 and 103 (responses to comments 64 and 109)(applicant obligated under 37 C.F.R. §10.18 to inquire into the underlying facts and circumstances when providing statements to the Patent and Trademark Office).

[3] See: Changes to Patent Practice and Procedure; Final Rule Notice, 62 Fed. Reg. at 53158-59 (October 10, 1997), 1203 Off. Gaz. Pat. Office at 86-87 (October 21, 1997).

[4] The language of 35 U.S.C. §133 and 37 C.F.R. §1.137(a) is clear, unambiguous, and without qualification: the delay in tendering the reply to the outstanding Office action, as well as filing the first petition seeking revival, must have been unavoidable for the reply now to be accepted on petition. (Therefore, by example, an unavoidable delay in the payment of the Filing Fee might occur if a reply is shipped by the US Postal Service, but due to catastrophic accident, the delivery is not made.) Delays in responding properly raise the question whether delays are unavoidable. Where there is a question whether the delay was unavoidable, Petitioners must meet the burden of establishing that the delay was unavoidable within the meaning of 35 U.S.C. §133 and 37 C.F.R. §1.137(a) And the Petitioner must be diligent in attending to the matter. Failure to do so does not constitute the care required under Pratt, and so cannot satisfy the test for diligence and due care. (By contrast, unintentional delays are those that do not satisfy the very strict statutory and regulatory requirements of unavoidable delay, and also, by definition, are not intentional.))

Allegations as to the Request to
Withdraw the Holding of Abandonment

The record evidences a satisfactory presentation of the showing requirements under the Rule. It is noted, however, that the timing requirements were not satisfied.

CONCLUSION

The petition as considered under 37 C.F.R. §1.181 is **granted**, and the 26 November, 2008, Notice of Abandonment is **vacated**.

The instant application is released to the Office of Patent Application Processing (OPAP) for further processing as necessary in due course.

Petitioner may find it beneficial to view Private PAIR within a fortnight of the instant decision to ensure that the revival has been acknowledged by the OPAP in response to this decision. It is noted that all inquiries with regard to that change in status need be directed to the OPAP where that change of status must be effected—that does not occur in the Office of Petitions.

Telephone inquiries regarding this decision may be directed to the undersigned at (571) 272-3214—it is noted, however, that all practice before the Office is in writing (see: 37 C.F.R. §1.2[5]) and the proper authority for action on any matter in this regard are the statutes (35 U.S.C.), regulations (37 C.F.R.) and the commentary on policy (MPEP). Therefore, no telephone discussion may be controlling or considered authority for Petitioner's action(s).

/John J. Gillon, Jr./
John J. Gillon, Jr.
Senior Attorney
Office of Petitions

[5] The regulations at 37 C.F.R. §1.2 provide:
§1.2 Business to be transacted in writing.
All business with the Patent and Trademark Office should be transacted in writing. The personal attendance of applicants or their attorneys or agents at the Patent and Trademark Office is unnecessary. The action of the Patent and Trademark Office will be based exclusively on the written record in the Office. No attention will be paid to any alleged oral promise, stipulation, or understanding in relation to which there is disagreement or doubt.

UNITED STATES PATENT AND TRADEMARK OFFICE

UNITED STATES DEPARTMENT OF COMMERCE
United States Patent and Trademark Office
Address: COMMISSIONER FOR PATENTS
P.O. Box 1450
Alexandria, Virginia 22313-1450
www.uspto.gov

PIONEER HI-BRED INTERNATIONAL, INC
7250 NW 62ND AVENUE
PO BOX 552
JOHNSTON, IA 50131-0552

Mail Date: 04/21/2010

Applicant	: THOMAS C. CORBIN	: DECISION ON REQUEST FOR
Patent Number	: 7586025	: RECALCULATION of PATENT
Issue Date	: 09/08/2009	: TERM ADJUSTMENT IN VIEW
Appliction No	: 12/054,400	: OF WYETH AND NOTICE OF INTENT TO
Filed	: 03/25/2008	: ISSUE CERTIFICATE OF CORRECTION
		:

The Request for Recalculation is **GRANTED** to the extent indicated.

The patent term adjustment has been determined to be **0** days. The USPTO will *sua sponte* issue a certificate of correction reflecting the amount of PTA days determined by the recalculation.

Prior to the issuance of the certificate of correction, the USPTO will afford patentee an opportunity to be heard and request reconsideration. Accordingly, patentee has **one month or thirty (30) days**, whichever is longer, to file a request for reconsideration of this patent term adjustment calculation. See 35 U.S.C. 154(b)(3)(B)(ii) and 37 CFR 1.322(a)(4). No extensions of time will be granted under 37 CFR 1.136.

Patentee should use document code PET.OP if electronically filing a request for reconsideration of this patent term adjustment calculation. The patentee must also include the information required by 37 CFR 1.705(b)(2) and the fee required by 37 CFR 1.18(e). If patentee does not file a timely request for reconsideration of this patent term adjustment calculation including the information required by 37 CFR 1.705(b)(2) and the fee required by 37 CFR 1.18(e), the USPTO will issue a certificate of correction reflecting the PTA determination noted above.

Patentee should be aware that in order to preserve the right to review in the United States District Court for the District of Columbia of the USPTO patent term adjustment determination, patentee must ensure that he or she also take the steps required under 35 U.S.C. 154(b)(4)(A) in a timely manner. Nothing in the request for recalculation should be construed as providing an alternative time frame for commencing a civil action under 35 U.S.C. 154(b)(4)(A).

Any questions concerning this decision should be directed to the Office of Patent Legal Administration at 571-272-7702.

UNITED STATES PATENT AND TRADEMARK OFFICE

UNITED STATES DEPARTMENT OF COMMERCE
United States Patent and Trademark Office
Address: COMMISSIONER FOR PATENTS
P.O. Box 1450
Alexandria, Virginia 22313-1450
www.uspto.gov

PIONEER HI - BRED INTERNATIONAL, INC.
7250 NW 62ND AVENUE
P O BOX 552
JOHNSTON, IA 50131-0552

Mail Date: 04/21/2010

Applicant	: LEON G. STREIT	: DECISION ON REQUEST FOR
Patent Number	: 7589259	: RECALCULATION of PATENT
Issue Date	: 09/15/2009	: TERM ADJUSTMENT IN VIEW
Appliction No	: 12/054,401	: OF WYETH AND NOTICE OF INTENT TO
Filed	: 03/25/2008	: ISSUE CERTIFICATE OF CORRECTION
		:

The Request for Recalculation is **GRANTED** to the extent indicated.

The patent term adjustment has been determined to be **0** days. The USPTO will *sua sponte* issue a certificate of correction reflecting the amount of PTA days determined by the recalculation.

Prior to the issuance of the certificate of correction, the USPTO will afford patentee an opportunity to be heard and request reconsideration. Accordingly, patentee has **one month or thirty (30) days**, whichever is longer, to file a request for reconsideration of this patent term adjustment calculation. See 35 U.S.C. 154(b)(3)(B)(ii) and 37 CFR 1.322(a)(4). No extensions of time will be granted under 37 CFR 1.136.

Patentee should use document code PET.OP if electronically filing a request for reconsideration of this patent term adjustment calculation. The patentee must also include the information required by 37 CFR 1.705(b)(2) and the fee required by 37 CFR 1.18(e). If patentee does not file a timely request for reconsideration of this patent term adjustment calculation including the information required by 37 CFR 1.705(b)(2) and the fee required by 37 CFR 1.18(e), the USPTO will issue a certificate of correction reflecting the PTA determination noted above.

Patentee should be aware that in order to preserve the right to review in the United States District Court for the District of Columbia of the USPTO patent term adjustment determination, patentee must ensure that he or she also take the steps required under 35 U.S.C. 154(b)(4)(A) in a timely manner. Nothing in the request for recalculation should be construed as providing an alternative time frame for commencing a civil action under 35 U.S.C. 154(b)(4)(A).

Any questions concerning this decision should be directed to the Office of Patent Legal Administration at 571-272-7702.

UNITED STATES PATENT AND TRADEMARK OFFICE

UNITED STATES DEPARTMENT OF COMMERCE
United States Patent and Trademark Office
Address: COMMISSIONER FOR PATENTS
P.O. Box 1450
Alexandria, Virginia 22313-1450
www.uspto.gov

PIONEER HI - BRED INTERNATIONAL, INC.
7250 NW 62ND AVENUE
P O BOX 552
JOHNSTON, IA 50131-0552

Mail Date: 04/26/2010

Applicant	: STEVEN R. SCHNEBLY	: DECISION ON REQUEST FOR
Patent Number	: 7582811	: RECALCULATION of PATENT
Issue Date	: 09/01/2009	: TERM ADJUSTMENT IN VIEW
Application No	: 12/054,402	: OF WYETH AND NOTICE OF INTENT TO
Filed	: 03/25/2008	: ISSUE CERTIFICATE OF CORRECTION
		:

The Request for Recalculation is **GRANTED** to the extent indicated.

The patent term adjustment has been determined to be **0** days. The USPTO will *sua sponte* issue a certificate of correction reflecting the amount of PTA days determined by the recalculation.

Prior to the issuance of the certificate of correction, the USPTO will afford patentee an opportunity to be heard and request reconsideration. Accordingly, patentee has **one month or thirty (30) days**, whichever is longer, to file a request for reconsideration of this patent term adjustment calculation. See 35 U.S.C. 154(b)(3)(B)(ii) and 37 CFR 1.322(a)(4). No extensions of time will be granted under 37 CFR 1.136.

Patentee should use document code PET.OP if electronically filing a request for reconsideration of this patent term adjustment calculation. The patentee must also include the information required by 37 CFR 1.705(b)(2) and the fee required by 37 CFR 1.18(e). If patentee does not file a timely request for reconsideration of this patent term adjustment calculation including the information required by 37 CFR 1.705(b)(2) and the fee required by 37 CFR 1.18(e), the USPTO will issue a certificate of correction reflecting the PTA determination noted above.

Patentee should be aware that in order to preserve the right to review in the United States District Court for the District of Columbia of the USPTO patent term adjustment determination, patentee must ensure that he or she also take the steps required under 35 U.S.C. 154(b)(4)(A) in a timely manner. Nothing in the request for recalculation should be construed as providing an alternative time frame for commencing a civil action under 35 U.S.C. 154(b)(4)(A).

Any questions concerning this decision should be directed to the Office of Patent Legal Administration at 571-272-7702.

UNITED STATES PATENT AND TRADEMARK OFFICE

UNITED STATES DEPARTMENT OF COMMERCE
United States Patent and Trademark Office
Address: COMMISSIONER FOR PATENTS
P.O. Box 1450
Alexandria, Virginia 22313-1450
www.uspto.gov

PIONEER HI-BRED INTERNATIONAL, INC.
7250 NW 62ND AVENUE
PO BOX 552
JOHNSTON, IA 50131-0552

Mail Date: 04/26/2010

Applicant	: STEVEN R. SCHNEBLY	: DECISION ON REQUEST FOR
Patent Number	: 7601898	: RECALCULATION of PATENT
Issue Date	: 10/13/2009	: TERM ADJUSTMENT IN VIEW
Application No	: 12/054,404	: OF WYETH AND NOTICE OF INTENT TO
Filed	: 03/25/2008	: ISSUE CERTIFICATE OF CORRECTION
		:

The Request for Recalculation is **GRANTED** to the extent indicated.

The patent term adjustment has been determined to be **0** days. The USPTO will *sua sponte* issue a certificate of correction reflecting the amount of PTA days determined by the recalculation.

Prior to the issuance of the certificate of correction, the USPTO will afford patentee an opportunity to be heard and request reconsideration. Accordingly, patentee has **one month or thirty (30) days**, whichever is longer, to file a request for reconsideration of this patent term adjustment calculation. See 35 U.S.C. 154(b)(3)(B)(ii) and 37 CFR 1.322(a)(4). No extensions of time will be granted under 37 CFR 1.136.

Patentee should use document code PET.OP if electronically filing a request for reconsideration of this patent term adjustment calculation. The patentee must also include the information required by 37 CFR 1.705(b)(2) and the fee required by 37 CFR 1.18(e). If patentee does not file a timely request for reconsideration of this patent term adjustment calculation including the information required by 37 CFR 1.705(b)(2) and the fee required by 37 CFR 1.18(e), the USPTO will issue a certificate of correction reflecting the PTA determination noted above.

Patentee should be aware that in order to preserve the right to review in the United States District Court for the District of Columbia of the USPTO patent term adjustment determination, patentee must ensure that he or she also take the steps required under 35 U.S.C. 154(b)(4)(A) in a timely manner. Nothing in the request for recalculation should be construed as providing an alternative time frame for commencing a civil action under 35 U.S.C. 154(b)(4)(A).

Any questions concerning this decision should be directed to the Office of Patent Legal Administration at 571-272-7702.

UNITED STATES PATENT AND TRADEMARK OFFICE

UNITED STATES DEPARTMENT OF COMMERCE
United States Patent and Trademark Office
Address: COMMISSIONER FOR PATENTS
P.O. Box 1450
Alexandria, Virginia 22313-1450
www.uspto.gov

MCKEE, VOORHEES & SEASE, P.L.C.
ATTN: PIONEER HI-BRED
801 GRAND AVENUE, SUITE 3200
DES MOINES, IA 50309-2721

Mail Date: 04/23/2010

Applicant	: BRADLEY R. HEDGES	: DECISION ON REQUEST FOR
Patent Number	: 7592519	: RECALCULATION of PATENT
Issue Date	: 09/22/2009	: TERM ADJUSTMENT IN VIEW
Application No	: 12/054,409	: OF WYETH AND NOTICE OF INTENT TO
Filed	: 03/25/2008	: ISSUE CERTIFICATE OF CORRECTION
		:

The Request for Recalculation is **GRANTED** to the extent indicated.

The patent term adjustment has been determined to be **0** days. The USPTO will *sua sponte* issue a certificate of correction reflecting the amount of PTA days determined by the recalculation.

Prior to the issuance of the certificate of correction, the USPTO will afford patentee an opportunity to be heard and request reconsideration. Accordingly, patentee has **one month or thirty (30) days**, whichever is longer, to file a request for reconsideration of this patent term adjustment calculation. See 35 U.S.C. 154(b)(3)(B)(ii) and 37 CFR 1.322(a)(4). No extensions of time will be granted under 37 CFR 1.136.

Patentee should use document code PET.OP if electronically filing a request for reconsideration of this patent term adjustment calculation. The patentee must also include the information required by 37 CFR 1.705(b)(2) and the fee required by 37 CFR 1.18(e). If patentee does not file a timely request for reconsideration of this patent term adjustment calculation including the information required by 37 CFR 1.705(b)(2) and the fee required by 37 CFR 1.18(e), the USPTO will issue a certificate of correction reflecting the PTA determination noted above.

Patentee should be aware that in order to preserve the right to review in the United States District Court for the District of Columbia of the USPTO patent term adjustment determination, patentee must ensure that he or she also take the steps required under 35 U.S.C. 154(b)(4)(A) in a timely manner. Nothing in the request for recalculation should be construed as providing an alternative time frame for commencing a civil action under 35 U.S.C. 154(b)(4)(A).

Any questions concerning this decision should be directed to the Office of Patent Legal Administration at 571-272-7702.

UNITED STATES PATENT AND TRADEMARK OFFICE

UNITED STATES DEPARTMENT OF COMMERCE
United States Patent and Trademark Office
Address: COMMISSIONER FOR PATENTS
P.O. Box 1450
Alexandria, Virginia 22313-1450
www.uspto.gov

PIONEER HI-BRED INTERNATIONAL, INC.
7250 NW 62ND AVENUE
P.O. BOX 552
JOHNSTON, IA 50131-0552

Mail Date: 04/21/2010

Applicant	: DEBRA K. STEIGER	: DECISION ON REQUEST FOR
Patent Number	: 7598435	: RECALCULATION of PATENT
Issue Date	: 10/06/2009	: TERM ADJUSTMENT IN VIEW
Appliction No	: 12/054,412	: OF WYETH AND NOTICE OF INTENT TO
Filed	: 03/25/2008	: ISSUE CERTIFICATE OF CORRECTION
		:

The Request for Recalculation is **GRANTED** to the extent indicated.

The patent term adjustment has been determined to be **0** days. The USPTO will *sua sponte* issue a certificate of correction reflecting the amount of PTA days determined by the recalculation.

Prior to the issuance of the certificate of correction, the USPTO will afford patentee an opportunity to be heard and request reconsideration. Accordingly, patentee has **one month or thirty (30) days**, whichever is longer, to file a request for reconsideration of this patent term adjustment calculation. See 35 U.S.C. 154(b)(3)(B)(ii) and 37 CFR 1.322(a)(4). No extensions of time will be granted under 37 CFR 1.136.

Patentee should use document code PET.OP if electronically filing a request for reconsideration of this patent term adjustment calculation. The patentee must also include the information required by 37 CFR 1.705(b)(2) and the fee required by 37 CFR 1.18(e). If patentee does not file a timely request for reconsideration of this patent term adjustment calculation including the information required by 37 CFR 1.705(b)(2) and the fee required by 37 CFR 1.18(e), the USPTO will issue a certificate of correction reflecting the PTA determination noted above.

Patentee should be aware that in order to preserve the right to review in the United States District Court for the District of Columbia of the USPTO patent term adjustment determination, patentee must ensure that he or she also take the steps required under 35 U.S.C. 154(b)(4)(A) in a timely manner. Nothing in the request for recalculation should be construed as providing an alternative time frame for commencing a civil action under 35 U.S.C. 154(b)(4)(A).

Any questions concerning this decision should be directed to the Office of Patent Legal Administration at 571-272-7702.

UNITED STATES PATENT AND TRADEMARK OFFICE

UNITED STATES DEPARTMENT OF COMMERCE
United States Patent and Trademark Office
Address: COMMISSIONER FOR PATENTS
P.O. Box 1450
Alexandria, Virginia 22313-1450
www.uspto.gov

PIONEER HI - BRED INTERNATION, INC.
7250 NW 62ND AVENUE
P.O. BOX 552
JOHNSTON, IA 50131-0552

Mail Date: 04/26/2010

Applicant	: SCOTT A. SEBASTIAN	: DECISION ON REQUEST FOR
Patent Number	: 7582812	: RECALCULATION of PATENT
Issue Date	: 09/01/2009	: TERM ADJUSTMENT IN VIEW
Application No	: 12/054,421	: OF WYETH AND NOTICE OF INTENT TO
Filed	: 03/25/2008	: ISSUE CERTIFICATE OF CORRECTION
		:

The Request for Recalculation is **GRANTED** to the extent indicated.

The patent term adjustment has been determined to be **0** days. The USPTO will *sua sponte* issue a certificate of correction reflecting the amount of PTA days determined by the recalculation.

Prior to the issuance of the certificate of correction, the USPTO will afford patentee an opportunity to be heard and request reconsideration. Accordingly, patentee has **one month or thirty (30) days**, whichever is longer, to file a request for reconsideration of this patent term adjustment calculation. See 35 U.S.C. 154(b)(3)(B)(ii) and 37 CFR 1.322(a)(4). No extensions of time will be granted under 37 CFR 1.136.

Patentee should use document code PET.OP if electronically filing a request for reconsideration of this patent term adjustment calculation. The patentee must also include the information required by 37 CFR 1.705(b)(2) and the fee required by 37 CFR 1.18(e). If patentee does not file a timely request for reconsideration of this patent term adjustment calculation including the information required by 37 CFR 1.705(b)(2) and the fee required by 37 CFR 1.18(e), the USPTO will issue a certificate of correction reflecting the PTA determination noted above.

Patentee should be aware that in order to preserve the right to review in the United States District Court for the District of Columbia of the USPTO patent term adjustment determination, patentee must ensure that he or she also take the steps required under 35 U.S.C. 154(b)(4)(A) in a timely manner. Nothing in the request for recalculation should be construed as providing an alternative time frame for commencing a civil action under 35 U.S.C. 154(b)(4)(A).

Any questions concerning this decision should be directed to the Office of Patent Legal Administration at 571-272-7702.

UNITED STATES PATENT AND TRADEMARK OFFICE

UNITED STATES DEPARTMENT OF COMMERCE
United States Patent and Trademark Office
Address: COMMISSIONER FOR PATENTS
P.O. Box 1450
Alexandria, Virginia 22313-1450
www.uspto.gov

PIONEER HI-BRED INTERNATIONAL INC.
7250 NW 62ND AVENUE
PO BOX 552
JOHNSTON, IA 50131-0552

Mail Date: 04/26/2010

Applicant	: Martin A. Fabrizius	: DECISION ON REQUEST FOR
Patent Number	: 7589260	: RECALCULATION of PATENT
Issue Date	: 09/15/2009	: TERM ADJUSTMENT IN VIEW
Application No	: 12/054,437	: OF WYETH AND NOTICE OF INTENT TO
Filed	: 03/25/2008	: ISSUE CERTIFICATE OF CORRECTION
		:

The Request for Recalculation is **GRANTED** to the extent indicated.

The patent term adjustment has been determined to be **0** days. The USPTO will *sua sponte* issue a certificate of correction reflecting the amount of PTA days determined by the recalculation.

Prior to the issuance of the certificate of correction, the USPTO will afford patentee an opportunity to be heard and request reconsideration. Accordingly, patentee has **one month or thirty (30) days**, whichever is longer, to file a request for reconsideration of this patent term adjustment calculation. See 35 U.S.C. 154(b)(3)(B)(ii) and 37 CFR 1.322(a)(4). No extensions of time will be granted under 37 CFR 1.136.

Patentee should use document code PET.OP if electronically filing a request for reconsideration of this patent term adjustment calculation. The patentee must also include the information required by 37 CFR 1.705(b)(2) and the fee required by 37 CFR 1.18(e). If patentee does not file a timely request for reconsideration of this patent term adjustment calculation including the information required by 37 CFR 1.705(b)(2) and the fee required by 37 CFR 1.18(e), the USPTO will issue a certificate of correction reflecting the PTA determination noted above.

Patentee should be aware that in order to preserve the right to review in the United States District Court for the District of Columbia of the USPTO patent term adjustment determination, patentee must ensure that he or she also take the steps required under 35 U.S.C. 154(b)(4)(A) in a timely manner. Nothing in the request for recalculation should be construed as providing an alternative time frame for commencing a civil action under 35 U.S.C. 154(b)(4)(A).

Any questions concerning this decision should be directed to the Office of Patent Legal Administration at 571-272-7702.

UNITED STATES PATENT AND TRADEMARK OFFICE

UNITED STATES DEPARTMENT OF COMMERCE
United States Patent and Trademark Office
Address: COMMISSIONER FOR PATENTS
P.O. Box 1450
Alexandria, Virginia 22313-1450
www.uspto.gov

PIONEER HI-BRED INTERNATIONAL INC,
7250 NW 62ND AVENUE
PO BOX 552
JOHNSTON, IA 50131-0552

Mail Date: 04/26/2010

Applicant	: Jeffrey A. Thompson	: DECISION ON REQUEST FOR
Patent Number	: 7582813	: RECALCULATION of PATENT
Issue Date	: 09/01/2009	: TERM ADJUSTMENT IN VIEW
Application No	: 12/054,438	: OF WYETH AND NOTICE OF INTENT TO
Filed	: 03/25/2008	: ISSUE CERTIFICATE OF CORRECTION
		:

The Request for Recalculation is **GRANTED** to the extent indicated.

The patent term adjustment has been determined to be **0** days. The USPTO will *sua sponte* issue a certificate of correction reflecting the amount of PTA days determined by the recalculation.

Prior to the issuance of the certificate of correction, the USPTO will afford patentee an opportunity to be heard and request reconsideration. Accordingly, patentee has **one month or thirty (30) days**, whichever is longer, to file a request for reconsideration of this patent term adjustment calculation. See 35 U.S.C. 154(b)(3)(B)(ii) and 37 CFR 1.322(a)(4). No extensions of time will be granted under 37 CFR 1.136.

Patentee should use document code PET.OP if electronically filing a request for reconsideration of this patent term adjustment calculation. The patentee must also include the information required by 37 CFR 1.705(b)(2) and the fee required by 37 CFR 1.18(e). If patentee does not file a timely request for reconsideration of this patent term adjustment calculation including the information required by 37 CFR 1.705(b)(2) and the fee required by 37 CFR 1.18(e), the USPTO will issue a certificate of correction reflecting the PTA determination noted above.

Patentee should be aware that in order to preserve the right to review in the United States District Court for the District of Columbia of the USPTO patent term adjustment determination, patentee must ensure that he or she also take the steps required under 35 U.S.C. 154(b)(4)(A) in a timely manner. Nothing in the request for recalculation should be construed as providing an alternative time frame for commencing a civil action under 35 U.S.C. 154(b)(4)(A).

Any questions concerning this decision should be directed to the Office of Patent Legal Administration at 571-272-7702.

UNITED STATES PATENT AND TRADEMARK OFFICE

UNITED STATES DEPARTMENT OF COMMERCE
United States Patent and Trademark Office
Address: COMMISSIONER FOR PATENTS
P.O. Box 1450
Alexandria, Virginia 22313-1450
www.uspto.gov

PIONEER HI-BRED INTERNATIONAL, INC.
7250 NW 62ND AVENUE
PO BOX 552
JOHNSTON, IA 50131-0552

Mail Date: 04/21/2010

Applicant	: Jeffrey A. Thompson	: DECISION ON REQUEST FOR
Patent Number	: 7589261	: RECALCULATION of PATENT
Issue Date	: 09/15/2009	: TERM ADJUSTMENT IN VIEW
Appliction No	: 12/054,442	: OF WYETH AND NOTICE OF INTENT TO
Filed	: 03/25/2008	: ISSUE CERTIFICATE OF CORRECTION
		:

The Request for Recalculation is **GRANTED** to the extent indicated.

The patent term adjustment has been determined to be **0** days. The USPTO will *sua sponte* issue a certificate of correction reflecting the amount of PTA days determined by the recalculation.

Prior to the issuance of the certificate of correction, the USPTO will afford patentee an opportunity to be heard and request reconsideration. Accordingly, patentee has **one month or thirty (30) days**, whichever is longer, to file a request for reconsideration of this patent term adjustment calculation. See 35 U.S.C. 154(b)(3)(B)(ii) and 37 CFR 1.322(a)(4). No extensions of time will be granted under 37 CFR 1.136.

Patentee should use document code PET.OP if electronically filing a request for reconsideration of this patent term adjustment calculation. The patentee must also include the information required by 37 CFR 1.705(b)(2) and the fee required by 37 CFR 1.18(e). If patentee does not file a timely request for reconsideration of this patent term adjustment calculation including the information required by 37 CFR 1.705(b)(2) and the fee required by 37 CFR 1.18(e), the USPTO will issue a certificate of correction reflecting the PTA determination noted above.

Patentee should be aware that in order to preserve the right to review in the United States District Court for the District of Columbia of the USPTO patent term adjustment determination, patentee must ensure that he or she also take the steps required under 35 U.S.C. 154(b)(4)(A) in a timely manner. Nothing in the request for recalculation should be construed as providing an alternative time frame for commencing a civil action under 35 U.S.C. 154(b)(4)(A).

Any questions concerning this decision should be directed to the Office of Patent Legal Administration at 571-272-7702.

UNITED STATES PATENT AND TRADEMARK OFFICE

UNITED STATES DEPARTMENT OF COMMERCE
United States Patent and Trademark Office
Address: COMMISSIONER FOR PATENTS
P.O. Box 1450
Alexandria, Virginia 22313-1450
www.uspto.gov

PIONEER HI- BRED INTERNATIONAL, INC.
7250 NW 62ND AVENUE
P.O. BOX 552
JOHNSTON, IA 50131-0552

Mail Date: 04/21/2010

Applicant	: Thomas C. Corbin	: DECISION ON REQUEST FOR
Patent Number	: 7642417	: RECALCULATION of PATENT
Issue Date	: 01/05/2010	: TERM ADJUSTMENT IN VIEW
Appliction No	: 12/054,443	: OF WYETH AND NOTICE OF INTENT TO
Filed	: 03/25/2008	: ISSUE CERTIFICATE OF CORRECTION
		:

The Request for Recalculation is **GRANTED** to the extent indicated.

The patent term adjustment has been determined to be **0** days. The USPTO will *sua sponte* issue a certificate of correction reflecting the amount of PTA days determined by the recalculation.

Prior to the issuance of the certificate of correction, the USPTO will afford patentee an opportunity to be heard and request reconsideration. Accordingly, patentee has **one month or thirty (30) days**, whichever is longer, to file a request for reconsideration of this patent term adjustment calculation. See 35 U.S.C. 154(b)(3)(B)(ii) and 37 CFR 1.322(a)(4). No extensions of time will be granted under 37 CFR 1.136.

Patentee should use document code PET.OP if electronically filing a request for reconsideration of this patent term adjustment calculation. The patentee must also include the information required by 37 CFR 1.705(b)(2) and the fee required by 37 CFR 1.18(e). If patentee does not file a timely request for reconsideration of this patent term adjustment calculation including the information required by 37 CFR 1.705(b)(2) and the fee required by 37 CFR 1.18(e), the USPTO will issue a certificate of correction reflecting the PTA determination noted above.

Patentee should be aware that in order to preserve the right to review in the United States District Court for the District of Columbia of the USPTO patent term adjustment determination, patentee must ensure that he or she also take the steps required under 35 U.S.C. 154(b)(4)(A) in a timely manner. Nothing in the request for recalculation should be construed as providing an alternative time frame for commencing a civil action under 35 U.S.C. 154(b)(4)(A).

Any questions concerning this decision should be directed to the Office of Patent Legal Administration at 571-272-7702.

UNITED STATES PATENT AND TRADEMARK OFFICE

UNITED STATES DEPARTMENT OF COMMERCE
United States Patent and Trademark Office
Address: COMMISSIONER FOR PATENTS
P.O. Box 1450
Alexandria, Virginia 22313-1450
www.uspto.gov

PIONEER HI - BRED INTERNATIONAL, INC.
7250 NW 62ND AVENUE
P.O. BOX 562
JOHNSTON, IA 50131-0552

Mail Date: 04/26/2010

Applicant	: LEON G. STREIT	: DECISION ON REQUEST FOR
Patent Number	: 7642418	: RECALCULATION of PATENT
Issue Date	: 01/05/2010	: TERM ADJUSTMENT IN VIEW
Application No	: 12/054,452	: OF WYETH AND NOTICE OF INTENT TO
Filed	: 03/25/2008	: ISSUE CERTIFICATE OF CORRECTION
		:

The Request for Recalculation is **GRANTED** to the extent indicated.

The patent term adjustment has been determined to be **0** days. The USPTO will *sua sponte* issue a certificate of correction reflecting the amount of PTA days determined by the recalculation.

Prior to the issuance of the certificate of correction, the USPTO will afford patentee an opportunity to be heard and request reconsideration. Accordingly, patentee has **one month or thirty (30) days**, whichever is longer, to file a request for reconsideration of this patent term adjustment calculation. See 35 U.S.C. 154(b)(3)(B)(ii) and 37 CFR 1.322(a)(4). No extensions of time will be granted under 37 CFR 1.136.

Patentee should use document code PET.OP if electronically filing a request for reconsideration of this patent term adjustment calculation. The patentee must also include the information required by 37 CFR 1.705(b)(2) and the fee required by 37 CFR 1.18(e). If patentee does not file a timely request for reconsideration of this patent term adjustment calculation including the information required by 37 CFR 1.705(b)(2) and the fee required by 37 CFR 1.18(e), the USPTO will issue a certificate of correction reflecting the PTA determination noted above.

Patentee should be aware that in order to preserve the right to review in the United States District Court for the District of Columbia of the USPTO patent term adjustment determination, patentee must ensure that he or she also take the steps required under 35 U.S.C. 154(b)(4)(A) in a timely manner. Nothing in the request for recalculation should be construed as providing an alternative time frame for commencing a civil action under 35 U.S.C. 154(b)(4)(A).

Any questions concerning this decision should be directed to the Office of Patent Legal Administration at 571-272-7702.

UNITED STATES PATENT AND TRADEMARK OFFICE

UNITED STATES DEPARTMENT OF COMMERCE
United States Patent and Trademark Office
Address: COMMISSIONER FOR PATENTS
P.O. Box 1450
Alexandria, Virginia 22313-1450
www.uspto.gov

PIONEER HI- BRED INTERNATIONAL, INC.
7250 NW 62ND AVENUE
P.O. BOX 552
JOHNSTON, IA 50131-0552

Mail Date: 04/21/2010

Applicant	: MARTIN A. FABRIZIUS	: DECISION ON REQUEST FOR
Patent Number	: 7645921	: RECALCULATION of PATENT
Issue Date	: 01/12/2010	: TERM ADJUSTMENT IN VIEW
Appliction No	: 12/054,454	: OF WYETH AND NOTICE OF INTENT TO
Filed	: 03/25/2008	: ISSUE CERTIFICATE OF CORRECTION
		:

The Request for Recalculation is **GRANTED** to the extent indicated.

The patent term adjustment has been determined to be **0** days. The USPTO will *sua sponte* issue a certificate of correction reflecting the amount of PTA days determined by the recalculation.

Prior to the issuance of the certificate of correction, the USPTO will afford patentee an opportunity to be heard and request reconsideration. Accordingly, patentee has **one month or thirty (30) days**, whichever is longer, to file a request for reconsideration of this patent term adjustment calculation. See 35 U.S.C. 154(b)(3)(B)(ii) and 37 CFR 1.322(a)(4). No extensions of time will be granted under 37 CFR 1.136.

Patentee should use document code PET.OP if electronically filing a request for reconsideration of this patent term adjustment calculation. The patentee must also include the information required by 37 CFR 1.705(b)(2) and the fee required by 37 CFR 1.18(e). If patentee does not file a timely request for reconsideration of this patent term adjustment calculation including the information required by 37 CFR 1.705(b)(2) and the fee required by 37 CFR 1.18(e), the USPTO will issue a certificate of correction reflecting the PTA determination noted above.

Patentee should be aware that in order to preserve the right to review in the United States District Court for the District of Columbia of the USPTO patent term adjustment determination, patentee must ensure that he or she also take the steps required under 35 U.S.C. 154(b)(4)(A) in a timely manner. Nothing in the request for recalculation should be construed as providing an alternative time frame for commencing a civil action under 35 U.S.C. 154(b)(4)(A).

Any questions concerning this decision should be directed to the Office of Patent Legal Administration at 571-272-7702.

UNITED STATES PATENT AND TRADEMARK OFFICE

UNITED STATES DEPARTMENT OF COMMERCE
United States Patent and Trademark Office
Address: COMMISSIONER FOR PATENTS
P.O. Box 1450
Alexandria, Virginia 22313-1450
www.uspto.gov

PIONEER HI-BRED INTERNATIONAL INC
7250 NW 62ND AVENUE
PO BOX 552
JOHNSTON, IA 50131-0552

Mail Date: 04/21/2010

Applicant	: PAUL A. STEPHENS	: DECISION ON REQUEST FOR
Patent Number	: 7645922	: RECALCULATION of PATENT
Issue Date	: 01/12/2010	: TERM ADJUSTMENT IN VIEW
Appliction No	: 12/054,455	: OF WYETH AND NOTICE OF INTENT TO
Filed	: 03/25/2008	: ISSUE CERTIFICATE OF CORRECTION
		:

The Request for Recalculation is **GRANTED** to the extent indicated.

The patent term adjustment has been determined to be **0** days. The USPTO will *sua sponte* issue a certificate of correction reflecting the amount of PTA days determined by the recalculation.

Prior to the issuance of the certificate of correction, the USPTO will afford patentee an opportunity to be heard and request reconsideration. Accordingly, patentee has **one month or thirty (30) days**, whichever is longer, to file a request for reconsideration of this patent term adjustment calculation. See 35 U.S.C. 154(b)(3)(B)(ii) and 37 CFR 1.322(a)(4). No extensions of time will be granted under 37 CFR 1.136.

Patentee should use document code PET.OP if electronically filing a request for reconsideration of this patent term adjustment calculation. The patentee must also include the information required by 37 CFR 1.705(b)(2) and the fee required by 37 CFR 1.18(e). If patentee does not file a timely request for reconsideration of this patent term adjustment calculation including the information required by 37 CFR 1.705(b)(2) and the fee required by 37 CFR 1.18(e), the USPTO will issue a certificate of correction reflecting the PTA determination noted above.

Patentee should be aware that in order to preserve the right to review in the United States District Court for the District of Columbia of the USPTO patent term adjustment determination, patentee must ensure that he or she also take the steps required under 35 U.S.C. 154(b)(4)(A) in a timely manner. Nothing in the request for recalculation should be construed as providing an alternative time frame for commencing a civil action under 35 U.S.C. 154(b)(4)(A).

Any questions concerning this decision should be directed to the Office of Patent Legal Administration at 571-272-7702.

UNITED STATES PATENT AND TRADEMARK OFFICE

UNITED STATES DEPARTMENT OF COMMERCE
United States Patent and Trademark Office
Address: COMMISSIONER FOR PATENTS
P.O. Box 1450
Alexandria, Virginia 22313-1450
www.uspto.gov

PIONEER HI-BRED INTERNATIONAL, INC.
7250 NW 62ND AVENUE
PO BOX 552
JOHNSTON, IA 50131-0552

Mail Date: 04/21/2010

Applicant	: LEON G. STREIT	: DECISION ON REQUEST FOR
Patent Number	: 7663029	: RECALCULATION of PATENT
Issue Date	: 02/16/2010	: TERM ADJUSTMENT IN VIEW
Appliction No	: 12/054,457	: OF WYETH
Filed	: 03/25/2008	:
		:

The Patentee's Request for Recalculation is **DISMISSED.**

This Request is deemed ineligible for consideration for one or more of the following reasons:

(A). The patent for which PTA recalculation is requested is either a design or reissue application or is a reexamination proceeding;

(B). The patent for which PTA recalculation is requested resulted from a utility or plant application filed under 35 USC 111(a) before May 29, 2000 and no CPA filed in the application on/after May 29, 2000;

(C). The patent for which PTA recalculation is requested resulted from an international application in which the international filing date was before May 29, 2000 and no CPA filed in the application on/after May 29, 2000;

(D). The patent for which PTA recalculation is requested issued on/after March 2, 2010;

(E). The Request for Recalculation was filed more than 180 days after the grant date of the patent and the request was not filed within two months of a dismissal of a request for reconsideration of the of the patent term under 37 CFR 1.705(d);

(F). The Request for Recalculation is not solely limited to USPTO pre-Wyeth interpretation of 35 U.S.C. 154(b)(2)(A);

or

(G). A civil action was filed pursuant to 35 U.S.C. 154(b)(4)(A)concerning the same patent at issue in this request.

Patentee may file a reply to this decision dismissing the Request for Recalculation. Patentee must file such reply within one month or thirty days, whichever is longer, of the mail date of the decision dismissing the Request for Recalculation. No fee is required if patentee is asserting in the reply that the dismissal for ineligibility is improper.

Patentee should use document code PET.OP if electronically filing a reply to this dismissal. If the USPTO finds that the request was improperly deemed ineligible, the USPTO will mail applicant a recalculation determination.

Patentee should be aware that in order to preserve the right to review in the United States District Court for the District of Columbia of the USPTO patent term adjustment determination, patentee must ensure that he or she also take the steps required under 35 U.S.C. 154(b)(4)(A). Nothing in the request for recalculation should be construed as providing an alternative time frame for commencing a civil action under 35 U.S.C. 154 (b)(4)(A).

Any questions concerning this decision should be directed to the Office of Patent Legal Administration at 571-272-7702.

UNITED STATES PATENT AND TRADEMARK OFFICE

UNITED STATES DEPARTMENT OF COMMERCE
United States Patent and Trademark Office
Address: COMMISSIONER FOR PATENTS
P.O. Box 1450
Alexandria, Virginia 22313-1450
www.uspto.gov

PIONEER HI-BRED INTERNATIONAL, INC.
7250 NW 62ND AVENUE
P.O. BOX 552
JOHNSTON, IA 50131-0552

Mail Date: 04/21/2010

Applicant	: DEBRA K. STEIGER	: DECISION ON REQUEST FOR
Patent Number	: 7605307	: RECALCULATION of PATENT
Issue Date	: 10/20/2009	: TERM ADJUSTMENT IN VIEW
Appliction No	: 12/054,463	: OF WYETH AND NOTICE OF INTENT TO
Filed	: 03/25/2008	: ISSUE CERTIFICATE OF CORRECTION
		:

The Request for Recalculation is **GRANTED** to the extent indicated.

The patent term adjustment has been determined to be **0** days. The USPTO will *sua sponte* issue a certificate of correction reflecting the amount of PTA days determined by the recalculation.

Prior to the issuance of the certificate of correction, the USPTO will afford patentee an opportunity to be heard and request reconsideration. Accordingly, patentee has **one month or thirty (30) days**, whichever is longer, to file a request for reconsideration of this patent term adjustment calculation. See 35 U.S.C. 154(b)(3)(B)(ii) and 37 CFR 1.322(a)(4). No extensions of time will be granted under 37 CFR 1.136.

Patentee should use document code PET.OP if electronically filing a request for reconsideration of this patent term adjustment calculation. The patentee must also include the information required by 37 CFR 1.705(b)(2) and the fee required by 37 CFR 1.18(e). If patentee does not file a timely request for reconsideration of this patent term adjustment calculation including the information required by 37 CFR 1.705(b)(2) and the fee required by 37 CFR 1.18(e), the USPTO will issue a certificate of correction reflecting the PTA determination noted above.

Patentee should be aware that in order to preserve the right to review in the United States District Court for the District of Columbia of the USPTO patent term adjustment determination, patentee must ensure that he or she also take the steps required under 35 U.S.C. 154(b)(4)(A) in a timely manner. Nothing in the request for recalculation should be construed as providing an alternative time frame for commencing a civil action under 35 U.S.C. 154(b)(4)(A).

Any questions concerning this decision should be directed to the Office of Patent Legal Administration at 571-272-7702.

UNITED STATES PATENT AND TRADEMARK OFFICE

UNITED STATES DEPARTMENT OF COMMERCE
United States Patent and Trademark Office
Address: COMMISSIONER FOR PATENTS
P.O. Box 1450
Alexandria, Virginia 22313-1450
www.uspto.gov

PIONEER HI-BRED INTERNATIONAL, INC
7250 NW 62ND AVENUE
PO BOX 552
JOHNSTON, IA 50131-0552

Mail Date: 04/21/2010

Applicant	: PAUL A. STEPHENS	: DECISION ON REQUEST FOR
Patent Number	: 7622647	: RECALCULATION of PATENT
Issue Date	: 11/24/2009	: TERM ADJUSTMENT IN VIEW
Appliction No	: 12/054,466	: OF WYETH AND NOTICE OF INTENT TO
Filed	: 03/25/2008	: ISSUE CERTIFICATE OF CORRECTION
		:

The Request for Recalculation is **GRANTED** to the extent indicated.

The patent term adjustment has been determined to be **0** days. The USPTO will *sua sponte* issue a certificate of correction reflecting the amount of PTA days determined by the recalculation.

Prior to the issuance of the certificate of correction, the USPTO will afford patentee an opportunity to be heard and request reconsideration. Accordingly, patentee has **one month or thirty (30) days**, whichever is longer, to file a request for reconsideration of this patent term adjustment calculation. See 35 U.S.C. 154(b)(3)(B)(ii) and 37 CFR 1.322(a)(4). No extensions of time will be granted under 37 CFR 1.136.

Patentee should use document code PET.OP if electronically filing a request for reconsideration of this patent term adjustment calculation. The patentee must also include the information required by 37 CFR 1.705(b)(2) and the fee required by 37 CFR 1.18(e). If patentee does not file a timely request for reconsideration of this patent term adjustment calculation including the information required by 37 CFR 1.705(b)(2) and the fee required by 37 CFR 1.18(e), the USPTO will issue a certificate of correction reflecting the PTA determination noted above.

Patentee should be aware that in order to preserve the right to review in the United States District Court for the District of Columbia of the USPTO patent term adjustment determination, patentee must ensure that he or she also take the steps required under 35 U.S.C. 154(b)(4)(A) in a timely manner. Nothing in the request for recalculation should be construed as providing an alternative time frame for commencing a civil action under 35 U.S.C. 154(b)(4)(A).

Any questions concerning this decision should be directed to the Office of Patent Legal Administration at 571-272-7702.

UNITED STATES PATENT AND TRADEMARK OFFICE

UNITED STATES DEPARTMENT OF COMMERCE
United States Patent and Trademark Office
Address: COMMISSIONER FOR PATENTS
P.O. Box 1450
Alexandria, Virginia 22313-1450
www.uspto.gov

PIONEER HI-BRED INTERNATIONAL, INC.
7250 NW 62ND AVENUE
P.O. BOX 552
JOHNSTON, IA 50131-0552

Mail Date: 04/26/2010

Applicant	: MARTIN A. FABRIZIUS	: DECISION ON REQUEST FOR
Patent Number	: 7619148	: RECALCULATION of PATENT
Issue Date	: 11/17/2009	: TERM ADJUSTMENT IN VIEW
Application No	: 12/054,467	: OF WYETH AND NOTICE OF INTENT TO
Filed	: 03/25/2008	: ISSUE CERTIFICATE OF CORRECTION
		:

The Request for Recalculation is **GRANTED** to the extent indicated.

The patent term adjustment has been determined to be **0** days. The USPTO will *sua sponte* issue a certificate of correction reflecting the amount of PTA days determined by the recalculation.

Prior to the issuance of the certificate of correction, the USPTO will afford patentee an opportunity to be heard and request reconsideration. Accordingly, patentee has **one month or thirty (30) days**, whichever is longer, to file a request for reconsideration of this patent term adjustment calculation. See 35 U.S.C. 154(b)(3)(B)(ii) and 37 CFR 1.322(a)(4). No extensions of time will be granted under 37 CFR 1.136.

Patentee should use document code PET.OP if electronically filing a request for reconsideration of this patent term adjustment calculation. The patentee must also include the information required by 37 CFR 1.705(b)(2) and the fee required by 37 CFR 1.18(e). If patentee does not file a timely request for reconsideration of this patent term adjustment calculation including the information required by 37 CFR 1.705(b)(2) and the fee required by 37 CFR 1.18(e), the USPTO will issue a certificate of correction reflecting the PTA determination noted above.

Patentee should be aware that in order to preserve the right to review in the United States District Court for the District of Columbia of the USPTO patent term adjustment determination, patentee must ensure that he or she also take the steps required under 35 U.S.C. 154(b)(4)(A) in a timely manner. Nothing in the request for recalculation should be construed as providing an alternative time frame for commencing a civil action under 35 U.S.C. 154(b)(4)(A).

Any questions concerning this decision should be directed to the Office of Patent Legal Administration at 571-272-7702.

UNITED STATES PATENT AND TRADEMARK OFFICE

UNITED STATES DEPARTMENT OF COMMERCE
United States Patent and Trademark Office
Address: COMMISSIONER FOR PATENTS
P.O. Box 1450
Alexandria, Virginia 22313-1450
www.uspto.gov

PIONEER HBRED INTERNATIONAL, INC.
7250 NW 62ND AVENUE
PO BOX 552
JOHNSTON, IA 50131-0552

Mail Date: 04/21/2010

Applicant	: LEON G. STREIT	: DECISION ON REQUEST FOR
Patent Number	: 7652200	: RECALCULATION of PATENT
Issue Date	: 01/26/2010	: TERM ADJUSTMENT IN VIEW
Appliction No	: 12/054,473	: OF WYETH AND NOTICE OF INTENT TO
Filed	: 03/25/2008	: ISSUE CERTIFICATE OF CORRECTION
		:

The Request for Recalculation is **GRANTED** to the extent indicated.

The patent term adjustment has been determined to be **0** days. The USPTO will *sua sponte* issue a certificate of correction reflecting the amount of PTA days determined by the recalculation.

Prior to the issuance of the certificate of correction, the USPTO will afford patentee an opportunity to be heard and request reconsideration. Accordingly, patentee has **one month or thirty (30) days**, whichever is longer, to file a request for reconsideration of this patent term adjustment calculation. See 35 U.S.C. 154(b)(3)(B)(ii) and 37 CFR 1.322(a)(4). No extensions of time will be granted under 37 CFR 1.136.

Patentee should use document code PET.OP if electronically filing a request for reconsideration of this patent term adjustment calculation. The patentee must also include the information required by 37 CFR 1.705(b)(2) and the fee required by 37 CFR 1.18(e). If patentee does not file a timely request for reconsideration of this patent term adjustment calculation including the information required by 37 CFR 1.705(b)(2) and the fee required by 37 CFR 1.18(e), the USPTO will issue a certificate of correction reflecting the PTA determination noted above.

Patentee should be aware that in order to preserve the right to review in the United States District Court for the District of Columbia of the USPTO patent term adjustment determination, patentee must ensure that he or she also take the steps required under 35 U.S.C. 154(b)(4)(A) in a timely manner. Nothing in the request for recalculation should be construed as providing an alternative time frame for commencing a civil action under 35 U.S.C. 154(b)(4)(A).

Any questions concerning this decision should be directed to the Office of Patent Legal Administration at 571-272-7702.

UNITED STATES PATENT AND TRADEMARK OFFICE

UNITED STATES DEPARTMENT OF COMMERCE
United States Patent and Trademark Office
Address: COMMISSIONER FOR PATENTS
P.O. Box 1450
Alexandria, Virginia 22313-1450
www.uspto.gov

PIONEER HI-BRED INTERNATIONAL, INC.
7250 NW 62ND AVENUE
PO BOX 552
JOHNSTON, IA 50131-0552

Mail Date: 04/21/2010

Applicant	: THOMAS C. CORBIN	: DECISION ON REQUEST FOR
Patent Number	: 7652201	: RECALCULATION of PATENT
Issue Date	: 01/26/2010	: TERM ADJUSTMENT IN VIEW
Appliction No	: 12/054,474	: OF WYETH AND NOTICE OF INTENT TO
Filed	: 03/25/2008	: ISSUE CERTIFICATE OF CORRECTION
		:

The Request for Recalculation is **GRANTED** to the extent indicated.

The patent term adjustment has been determined to be **0** days. The USPTO will *sua sponte* issue a certificate of correction reflecting the amount of PTA days determined by the recalculation.

Prior to the issuance of the certificate of correction, the USPTO will afford patentee an opportunity to be heard and request reconsideration. Accordingly, patentee has **one month or thirty (30) days**, whichever is longer, to file a request for reconsideration of this patent term adjustment calculation. See 35 U.S.C. 154(b)(3)(B)(ii) and 37 CFR 1.322(a)(4). No extensions of time will be granted under 37 CFR 1.136.

Patentee should use document code PET.OP if electronically filing a request for reconsideration of this patent term adjustment calculation. The patentee must also include the information required by 37 CFR 1.705(b)(2) and the fee required by 37 CFR 1.18(e). If patentee does not file a timely request for reconsideration of this patent term adjustment calculation including the information required by 37 CFR 1.705(b)(2) and the fee required by 37 CFR 1.18(e), the USPTO will issue a certificate of correction reflecting the PTA determination noted above.

Patentee should be aware that in order to preserve the right to review in the United States District Court for the District of Columbia of the USPTO patent term adjustment determination, patentee must ensure that he or she also take the steps required under 35 U.S.C. 154(b)(4)(A) in a timely manner. Nothing in the request for recalculation should be construed as providing an alternative time frame for commencing a civil action under 35 U.S.C. 154(b)(4)(A).

Any questions concerning this decision should be directed to the Office of Patent Legal Administration at 571-272-7702.

UNITED STATES PATENT AND TRADEMARK OFFICE

UNITED STATES DEPARTMENT OF COMMERCE
United States Patent and Trademark Office
Address: COMMISSIONER FOR PATENTS
P.O. Box 1450
Alexandria, Virginia 22313-1450
www.uspto.gov

PIONEER HI-BRED INTERNATIONAL INC
7250 NW 62ND AVENUE
PO BOX 552
JOHNSTON, IA 50131-0552

Mail Date: 04/21/2010

Applicant	: PAUL A. STEPHENS	: DECISION ON REQUEST FOR
Patent Number	: 7645923	: RECALCULATION of PATENT
Issue Date	: 01/12/2010	: TERM ADJUSTMENT IN VIEW
Appliction No	: 12/054,483	: OF WYETH AND NOTICE OF INTENT TO
Filed	: 03/25/2008	: ISSUE CERTIFICATE OF CORRECTION
		:

The Request for Recalculation is **GRANTED** to the extent indicated.

The patent term adjustment has been determined to be **0** days. The USPTO will *sua sponte* issue a certificate of correction reflecting the amount of PTA days determined by the recalculation.

Prior to the issuance of the certificate of correction, the USPTO will afford patentee an opportunity to be heard and request reconsideration. Accordingly, patentee has **one month or thirty (30) days**, whichever is longer, to file a request for reconsideration of this patent term adjustment calculation. See 35 U.S.C. 154(b)(3)(B)(ii) and 37 CFR 1.322(a)(4). No extensions of time will be granted under 37 CFR 1.136.

Patentee should use document code PET.OP if electronically filing a request for reconsideration of this patent term adjustment calculation. The patentee must also include the information required by 37 CFR 1.705(b)(2) and the fee required by 37 CFR 1.18(e). If patentee does not file a timely request for reconsideration of this patent term adjustment calculation including the information required by 37 CFR 1.705(b)(2) and the fee required by 37 CFR 1.18(e), the USPTO will issue a certificate of correction reflecting the PTA determination noted above.

Patentee should be aware that in order to preserve the right to review in the United States District Court for the District of Columbia of the USPTO patent term adjustment determination, patentee must ensure that he or she also take the steps required under 35 U.S.C. 154(b)(4)(A) in a timely manner. Nothing in the request for recalculation should be construed as providing an alternative time frame for commencing a civil action under 35 U.S.C. 154(b)(4)(A).

Any questions concerning this decision should be directed to the Office of Patent Legal Administration at 571-272-7702.

UNITED STATES PATENT AND TRADEMARK OFFICE

UNITED STATES DEPARTMENT OF COMMERCE
United States Patent and Trademark Office
Address: COMMISSIONER FOR PATENTS
P.O. Box 1450
Alexandria, Virginia 22313-1450
www.uspto.gov

PIONEER HI-BRED INTERNATIONAL INC
7250 NW 62ND AVENUE
PO BOX 552
JOHNSTON, IA 50131-0552

Mail Date: 04/21/2010

Applicant	: PAUL A. STEPHENS	: DECISION ON REQUEST FOR
Patent Number	: 7642419	: RECALCULATION of PATENT
Issue Date	: 01/05/2010	: TERM ADJUSTMENT IN VIEW
Appliction No	: 12/054,486	: OF WYETH AND NOTICE OF INTENT TO
Filed	: 03/25/2008	: ISSUE CERTIFICATE OF CORRECTION
		:

The Request for Recalculation is **GRANTED** to the extent indicated.

The patent term adjustment has been determined to be **0** days. The USPTO will *sua sponte* issue a certificate of correction reflecting the amount of PTA days determined by the recalculation.

Prior to the issuance of the certificate of correction, the USPTO will afford patentee an opportunity to be heard and request reconsideration. Accordingly, patentee has **one month or thirty (30) days**, whichever is longer, to file a request for reconsideration of this patent term adjustment calculation. See 35 U.S.C. 154(b)(3)(B)(ii) and 37 CFR 1.322(a)(4). No extensions of time will be granted under 37 CFR 1.136.

Patentee should use document code PET.OP if electronically filing a request for reconsideration of this patent term adjustment calculation. The patentee must also include the information required by 37 CFR 1.705(b)(2) and the fee required by 37 CFR 1.18(e). If patentee does not file a timely request for reconsideration of this patent term adjustment calculation including the information required by 37 CFR 1.705(b)(2) and the fee required by 37 CFR 1.18(e), the USPTO will issue a certificate of correction reflecting the PTA determination noted above.

Patentee should be aware that in order to preserve the right to review in the United States District Court for the District of Columbia of the USPTO patent term adjustment determination, patentee must ensure that he or she also take the steps required under 35 U.S.C. 154(b)(4)(A) in a timely manner. Nothing in the request for recalculation should be construed as providing an alternative time frame for commencing a civil action under 35 U.S.C. 154(b)(4)(A).

Any questions concerning this decision should be directed to the Office of Patent Legal Administration at 571-272-7702.

UNITED STATES PATENT AND TRADEMARK OFFICE

UNITED STATES DEPARTMENT OF COMMERCE
United States Patent and Trademark Office
Address: COMMISSIONER FOR PATENTS
P.O. Box 1450
Alexandria, Virginia 22313-1450
www.uspto.gov

PIONEER HI-BRED INTERNATIONAL INC
7250 NW 62ND AVENUE
PO BOX 552
JOHNSTON, IA 50131

Mail Date: 04/21/2010

Applicant	: MARTIN A. FABRIZIUS	: DECISION ON REQUEST FOR
Patent Number	: 7642420	: RECALCULATION of PATENT
Issue Date	: 01/05/2010	: TERM ADJUSTMENT IN VIEW
Appliction No	: 12/054,497	: OF WYETH AND NOTICE OF INTENT TO
Filed	: 03/25/2008	: ISSUE CERTIFICATE OF CORRECTION
		:

The Request for Recalculation is **GRANTED** to the extent indicated.

The patent term adjustment has been determined to be **0** days. The USPTO will *sua sponte* issue a certificate of correction reflecting the amount of PTA days determined by the recalculation.

Prior to the issuance of the certificate of correction, the USPTO will afford patentee an opportunity to be heard and request reconsideration. Accordingly, patentee has **one month or thirty (30) days**, whichever is longer, to file a request for reconsideration of this patent term adjustment calculation. See 35 U.S.C. 154(b)(3)(B)(ii) and 37 CFR 1.322(a)(4). No extensions of time will be granted under 37 CFR 1.136.

Patentee should use document code PET.OP if electronically filing a request for reconsideration of this patent term adjustment calculation. The patentee must also include the information required by 37 CFR 1.705(b)(2) and the fee required by 37 CFR 1.18(e). If patentee does not file a timely request for reconsideration of this patent term adjustment calculation including the information required by 37 CFR 1.705(b)(2) and the fee required by 37 CFR 1.18(e), the USPTO will issue a certificate of correction reflecting the PTA determination noted above.

Patentee should be aware that in order to preserve the right to review in the United States District Court for the District of Columbia of the USPTO patent term adjustment determination, patentee must ensure that he or she also take the steps required under 35 U.S.C. 154(b)(4)(A) in a timely manner. Nothing in the request for recalculation should be construed as providing an alternative time frame for commencing a civil action under 35 U.S.C. 154(b)(4)(A).

Any questions concerning this decision should be directed to the Office of Patent Legal Administration at 571-272-7702.

UNITED STATES PATENT AND TRADEMARK OFFICE

UNITED STATES DEPARTMENT OF COMMERCE
United States Patent and Trademark Office
Address: COMMISSIONER FOR PATENTS
P.O. Box 1450
Alexandria, Virginia 22313-1450
www.uspto.gov

PIONEER HI-BRED INTERNATIONAL INC
7250 NW 62ND AVENUE
PO BOX 552
JOHNSTON, IA 50131-0552

Mail Date: 04/21/2010

Applicant	: MARK J. HOOD	: DECISION ON REQUEST FOR
Patent Number	: 7642421	: RECALCULATION of PATENT
Issue Date	: 01/05/2010	: TERM ADJUSTMENT IN VIEW
Appliction No	: 12/054,503	: OF WYETH AND NOTICE OF INTENT TO
Filed	: 03/25/2008	: ISSUE CERTIFICATE OF CORRECTION
		:

The Request for Recalculation is **GRANTED** to the extent indicated.

The patent term adjustment has been determined to be **0** days. The USPTO will *sua sponte* issue a certificate of correction reflecting the amount of PTA days determined by the recalculation.

Prior to the issuance of the certificate of correction, the USPTO will afford patentee an opportunity to be heard and request reconsideration. Accordingly, patentee has **one month or thirty (30) days**, whichever is longer, to file a request for reconsideration of this patent term adjustment calculation. See 35 U.S.C. 154(b)(3)(B)(ii) and 37 CFR 1.322(a)(4). No extensions of time will be granted under 37 CFR 1.136.

Patentee should use document code PET.OP if electronically filing a request for reconsideration of this patent term adjustment calculation. The patentee must also include the information required by 37 CFR 1.705(b)(2) and the fee required by 37 CFR 1.18(e). If patentee does not file a timely request for reconsideration of this patent term adjustment calculation including the information required by 37 CFR 1.705(b)(2) and the fee required by 37 CFR 1.18(e), the USPTO will issue a certificate of correction reflecting the PTA determination noted above.

Patentee should be aware that in order to preserve the right to review in the United States District Court for the District of Columbia of the USPTO patent term adjustment determination, patentee must ensure that he or she also take the steps required under 35 U.S.C. 154(b)(4)(A) in a timely manner. Nothing in the request for recalculation should be construed as providing an alternative time frame for commencing a civil action under 35 U.S.C. 154(b)(4)(A).

Any questions concerning this decision should be directed to the Office of Patent Legal Administration at 571-272-7702.

UNITED STATES PATENT AND TRADEMARK OFFICE

UNITED STATES DEPARTMENT OF COMMERCE
United States Patent and Trademark Office
Address: COMMISSIONER FOR PATENTS
P.O. Box 1450
Alexandria, Virginia 22313-1450
www.uspto.gov

APPLICATION NO.	FILING DATE	FIRST NAMED INVENTOR	ATTORNEY DOCKET NO.	CONFIRMATION NO.
12/054,562	03/25/2008	Ki-Hyun KIM	5000-1-1087	6295

7590 12/19/2008
CHA & REITER, LLC
210 ROUTE 4 EAST STE 103
PARAMUS, NJ 07652

EXAMINER
HOANG, QUOC DINH

ART UNIT	PAPER NUMBER
2892	

MAIL DATE	DELIVERY MODE
12/19/2008	PAPER

DECISION GRANTING PETITION UNDER 37 CFR 1.138(d)

The declaration of express abandonment is recognized

This is in response to the petition under 37 CFR 1.138(d), requesting for a refund of any previously paid search fee and excess claims fee in the above-identified application.

The petition is granted.

The express abandonment is recognized. Any previously paid search fee and excess claims fee are hereby refunded.

Telephone inquiries should be directed to the Office of Data Management at (571) 272-4200.

Patent Publication Branch
Office of Data Management

```
Adjustment date: 12/22/2008  BPOWELL
03/25/2008 INTEFSW  00008793 12054562
02 FC:1111                    -510.00 OP
04 FC:1202                    -100.00 OP
```

```
Adjustment Date: 12/22/2008  BPOWELL
09/02/2008 INTEFSW  00004104 503539   12202188
02 FC:1111          510.00 CR
```


FORM PET651G (Rev. 08/07)

Adjustment date: 12/22/2008 BPOWELL
03/25/2008 INTEFSW 00008793 12054562
02 FC:1111 -510.00 OP
04 FC:1202 -100.00 OP

UNITED STATES PATENT AND TRADEMARK OFFICE

UNITED STATES DEPARTMENT OF COMMERCE
United States Patent and Trademark Office
Address: COMMISSIONER FOR PATENTS
P.O. Box 1450
Alexandria, Virginia 22313-1450
www.uspto.gov

APPLICATION NO.	FILING DATE	FIRST NAMED INVENTOR	ATTORNEY DOCKET NO.	CONFIRMATION NO.
12/054,564	03/25/2008	William H. Eby	1421-327	6298

32905 7590 08/07/2009
JONDLE & ASSOCIATES P.C.
858 HAPPY CANYON ROAD SUITE 230
CASTLE ROCK, CO 80108

EXAMINER
KUBELIK, ANNE R

ART UNIT	PAPER NUMBER
1638	

MAIL DATE	DELIVERY MODE
08/07/2009	PAPER

Please find below and/or attached an Office communication concerning this application or proceeding.

The time period for reply, if any, is set in the attached communication.

UNITED STATES PATENT AND TRADEMARK OFFICE

Commissioner for Patents
United States Patent and Trademark Office
P.O. Box 1450
Alexandria, VA 22313-1450
www.uspto.gov

JONDLE & ASSOCIATES P.C.
858 HAPPY CANYON ROAD SUITE 230
CASTLE ROCK CO 80108

AUG 0 7 2009

In re Application of:
William H. Eby
Serial No.: 12/054,564
Filed: March 25, 2008
Attorney Docket No.: **1421-337**

: PETITION DECISION

This is in response to the petition under 37 CFR § 1.59(b), filed July 30, 2009, to expunge information from the above identified application. This application has not been allowed.

Petitioner requests that the Reply to Request for Information under 37 CFR 1.105, and attachment thereto, submitted to the Patent Office on July 30, 2009, be expunged from the record. Petitioner states either: (A) that the information contains trade secret material, proprietary material and/or material that is subject to a protective order which has not been made public; or (B) that the information submitted was unintentionally submitted and the failure to obtain its return would cause irreparable harm to the party who submitted the information or to the party in interest on whose behalf the information was submitted, and the information has not otherwise been made public. The petition fee set forth in 37 CFR § 1.17(g) has been paid.

This is an examined application which is currently under non-final rejection. As such the information provided has been reviewed, in part, but proceedings in the application have not been terminated. As stated in M.P.E.P. 724, upon allowance or other action closing prosecution in an application, petition may be made for return of Proprietary information. The information cannot be expunged at this time.

The petition is **DISMISSED**. Petitioner may resubmit the petition subsequent to a Notice of Allowability or *ex parte Quayle* action being mailed in the application. No additional petition fee will be required at that time.

Should there be any questions about this decision please contact Marianne C. Seidel by letter addressed to Director, TC 1600, at the address listed above, or by telephone at 571-272-0584 or by facsimile sent to the general Office facsimile number, 703-872-9306.

Marianne C. Seidel
Quality Assurance Specialist
Technology Center 1600

UNITED STATES DEPARTMENT OF COMMERCE
Patent and Trademark Office
ASSISTANT SECRETARY OF COMMERCE AND
COMMISSIONER OF PATENTS AND TRADEMARKS
Washington, DC 20231

3/10/2010

Patent No. :7665288
Inventor(s) :Eleni Karayianni et al.
Issued :2/23/2010
Title :ENERGY ACTIVE COMPOSITE YARN METHODS FOR MAKING THE SAME AND ARTICLES INCORPORATING THE SAME
Atty.doc./File No.

Request for Certificates of Correction

Consideration has been given to your request for the issuance of a Certificate of Correction, for the above – identified patent under the provisions of CFR 1.322.

Inspection of the application for the patent reveals claims item [56] is printed in accordance with the record please show evidence of supporting data or amendment. Therefore being no fault on the Patent and Trademark Office, It has no authority to issue a certificate of correction under the provision of 1.322.

In view of the forgoing, your request in this matter, is hereby denied.

Future written correspondence concerning this matter should be filed and directed to Decisions & Certificates of Correction Branch.

Henry Randall
Decisions & Certificates
of Correction Branch
(703) 756-1571

CONNOLLY BOVE LODGE & HUTZ LLP
1007 NORTH ORANGE STREET
P.O.BOX 2207
WILMINGTON, DELAWARE 19899-2207

HR

UNITED STATES PATENT AND TRADEMARK OFFICE

Commissioner for Patents
United States Patent and Trademark Office
P.O. Box 1450
Alexandria, VA 22313-1450
www.uspto.gov

BROMBERG & SUNSTEIN LLP
125 SUMMER STREET
BOSTON MA 02110-1618

APR 09 2008

In re Application of: Fonte Matthew W.
Application No.: 12/054,678
Filed: March 25, 2008
Title: PROXIMALLY SELF-LOCKING LONG BONE PROSTHESIS

DECISION ON PETITION TO MAKE SPECIAL FOR NEW APPLICATION UNDER 37 C.F.R. § 1.102 & M.P.E.P. § 708.02

This is a decision on the petition filed on March 25, 2008 to make the above-identified application special for accelerated examination procedure under 37 C.F.R. § 1.102(d).

The petition to make the application special is **DISMISSED**.

REGULATION AND PRACTICE

A grantable petition to make special under 37 C.F.R. § 1.102(d) and pursuant to the "Change to Practice for Petitions in Patent Applications to Make Special and for Accelerated Examination" published in the Federal Register on June 26, 2006 (71 Fed. Reg. 36323), must satisfy the following conditions:

I. Conditions Regarding the Application:

1. the application must be a non-reissue utility or design application filed under 37 CFR 1.111(a);
2. the application, the petition and the required fees must be filed electronically using the USPTO's electronic filing system (EFS), or EFS-web; if not filed electronically, a statement asserting that EFS and EFS-web were not available during the normal business hours.
3. at the time of filing, the application must be complete under 37 CFR 1.51 and in condition for examination;
4. the application must contain three or fewer independent claims and twenty or fewer total claims and the claims must be directed to a single invention.

II. Conditions Regarding the Petition:

The petition must:

1. be filed with the application;
2. include a statement that applicant agrees not to separately argue the patentability of any independent claim during any appeal in the application;
3. include a statement that applicant agrees to make an election without traverse in a telephone interview.

4. include a statement that applicant agrees to conduct such an interview when requested by the examiner.

5. include a statement, made based on a good faith belief, that a preexamination search in compliance with the following requirements, was conducted, including an identification of the field of search by United States class and subclass, where applicable, and for database searches, the search logic or chemical structure or sequence used as a query, the name of the file(s) searched and the database service, and the date of the search.

The preexamination search must:

5.1 involve U.S. patents and patent application publications, foreign patent documents, and non-patent literature, unless the applicant can justify with reasonable certainty that no references more pertinent than those already identified are likely to be found in the eliminated sources and includes such a justification with this statement;

5.2. be directed to the claimed invention and encompass all of the features of the claims, giving the claims the broadest reasonable interpretation;

5.3. encompass the disclosed features that may be claimed.

6. must provide in support of the petition an accelerated examination support document. An accelerated examination support document must include:

6.1. an information disclosure statement (IDS) in compliance with 37 CFR 1.98 citing each reference deemed most closely related to the subject matter of each of the claims;

6.2. an identification of all the limitations in the claims that are disclosed by the reference specifying where the limitation is disclosed in the cited reference;

6.3. a detailed explanation of how each of the claims are patentable over the references cited with particularity required by 37 CFR 1.111(b) and (c);

6.4. a concise statement of the utility of the invention as defined in each of the independent claims (unless the application is a design application);

6.5. a showing of where each limitation of the claims finds support under 35 U.S.C. 112, first paragraph, in the written description of the specification. If applicable, the showing must also identify: (1) each means- (or step) plus-function claim element that invokes consideration under 35 U.S.C. 112, sixth paragraph; and (2) the structure, material, or acts in the specification that corresponds to each means- (or step) plus-function claim element that invokes consideration under 35 U.S.C. 112, sixth paragraph; if the application claims the benefit of one or more applications under title 35, United States Code, the showing must also include where each limitation of the claims finds support under 35 U.S.C. 112, first paragraph, in each such application in which such supports exists;

6.6. an identification of any cited references that may be disqualified under 35 U.S.C. 103(c).

REVIEW OF FACTS

The conditions I: 1, 2, 4, II: 1-5, 5.1, 5.3, 6, 6.1, and 6.6 above are considered to have been met. However, the petition fails to comply with conditions I: 3, II: 5.2, 6.2, 6.3, 6.4 and 6.5 above. Therefore, the petition fails to meet the required conditions to be accorded special status under the accelerated examination procedure.

Discussion

When referring to "the petition" herein below, the received papers under consideration include the four page PTO/SB/28 form "Petition to Make Special Under Accelerated Examination Program", the "pre-examination search document" including pages 1-7; the "accelerated examination support document" comprising pages 1-51, and two Information Disclosure Statements, pages 1-12 and 1-5 respectively.

Regarding the requirements of section I element 3 outlined above, the oath fails to comply with 37 C.F.R. 1.63 (b)(3): "State that the person making the oath or declaration acknowledges the duty to disclose to the Office all information known to the person to be material to patentability as defined in § 1.56."

Regarding the requirements of section II element 5.2 outlined above, it appears the search outlined in the petition omitted a critical search area by not searching in class 606 subclasses 78 and 95; and class 623 subclasses 23.29, 23.32, 23.35, and 23.48. The listed search in class 128 subclass 92YM could not be verified, and Applicant is required to clarify where said subclass resides. The class/subclass search should be supplemented with a text search over A61F 2/28-2/46 and 623/18.11-23.55 using the following synonyms & related terms: nitinol, NiTi, titanium nickelide (term used by Russians); shape memory, SMA (shape memory alloy), superelastic, pseudoelastic. Applicant attention is drawn to Johnson et al., US 5,858,020 that appears to be closely related to the claimed invention.

Regarding the requirements of section II element 6.2 outlined above, the petition fails to identify all of the limitations in the application claims that are disclosed in each of the reference(s) and where the limitation is disclosed in each of the cited reference. As stated in the policy published in the Federal Register on June 26, 2006 (71 Fed. Reg. 36323), for each reference cited, the examination support document must include an identification of all the limitations in the claims that are disclosed by the reference specifying where the limitation is disclosed in the cited reference. The policy statement does not caveat "the independent claims", nor does it allow for grouping and general discussions. A grantable petition must delineate every limitation of every claim and identify where the equivalent limitation is disclosed in each piece of prior art cited on the IDS. As is published on www.uspto.gov/web/patents/accelerated/ in "Guidelines for Applicants under the new accelerated examination procedures"):

> *For each reference cited, the accelerated examination support document must include an identification of all the limitations in the claims that are disclosed by the reference specifying where the limitation is disclosed in the cited reference. Applicants should specify where in each of the cited references the particular claim limitations are found. This process is intended to be analogous to the analysis an examiner uses when locating a relevant prior art reference and then determining whether the reference contains the claimed limitation. For each claimed limitation, the examiner would consider the disclosure of the reference and all reasonable portions in the reference where the limitation is shown. When preparing an Office Action, the examiner would correlate the limitation to the portion of reference which best characterizes the limitation. This part of the AESD is not intended to be an exhaustive listing of every conceivable subjective interpretation of how a claim limitation may read on the reference. Applicants should*

point out what are considered to be the relevant representations of the limitation in the reference. A limitation may be found in more than one portion of the reference and should be pointed out, yet the intention is not to have applicants point out every conceivable interpretation. The USPTO will adopt a rule of reason when evaluating this portion of the AESD. Unless the representation is so deficient that it would materially effect examination of the application (e.g., numerous instances where the limitations are not shown where applicant states they are), the representation will be deemed to be sufficient for this part of the AESD.

First, petitioner's submission is at times specific and at times not specific enough. Petitioner points out some limitations of some of the claims and provides direction to areas of the prior art where the corresponding limitation may be found. Petitioner does not address <u>each limitation</u> and where it is (<u>or state that it is not</u>) found in each one of the most closely related prior art. The requirement of section II element 6.2 can be satisfied by listing all the presently filed claims (i.e., the claims of the instant application) and by indicating where each limitation of each one of said presently filed claims is taught (or is not taught) in <u>each one</u> of the cited most closely related references, by specifically indicating the element number and/or the relevant page/paragraph and line number(s) or by indicating "(not disclosed)" where appropriate. This one-to-one mapping should be performed individually, with regard to each one of the most closely related prior art that has been cited, one reference at a time.
Note: with regard to the 12 pages IDS and the accompanying letter stating on p. 2 that: "Applicants submit herewith patents, publications or other information, of which they are aware that they believe may be material to the examination of this application, and in respect of which, there may be a duty to disclose." It is not clear why applicants have not included a discussion of all the references in said 12 pages IDS in the Examination Support Document, because an identical statement is made in the letter accompanying the (shorter) 5 pages IDS.

Similarly, with respect to the requirements of section II element 6.3 outlined above, the petition fails to provide a detailed explanation of how each one of the claims is patentable over (each of) the reference(s) with particularity required by 37 CFR 1.111(b) and (c). Petitioners should be specific in their explanation and include the identification of specific claim limitations that support their position, where appropriate. Petitioners must distinguish each claim from each piece of prior art cited. General statements that the claims are neither anticipated nor rendered obvious by the cited references or that the references are not properly combinable will not be acceptable. The Office cannot infer or guess what petitioner believes the differences between the claims and the teachings of the prior art to be. Petitioner's statements must also be consistent and must be related to the claim language. In the instant petition, some claims were left completely out of the analysis. For these reasons, the petition does not meet the requirement of section II, element 6.3. The requirement of section II element 6.3 can be satisfied by listing all the presently filed claims (i.e., the claims of the instant application) and by indicating which specific limitation(s) in <u>each one</u> of said presently filed claims define(s) over each one of the most closely related references that has been cited. With regard to each dependent claim, there should be an unequivocal statement whether the patentability of each dependent claim is predicated solely on that of the claim from which it depends, or Applicant should provide a detailed explanation of patentability specific to that particular claim. This patentability showing

should be performed individually, with regard to each one of the most closely related prior art that has been cited, one reference at a time.

Regarding the requirements of section II element 6.4 outlined above, the petition fails to identify a concise statement of the utility of the invention as defined in each of the independent claims. A general statement directed to the overall concept of the invention is not specifically relating the utility to each of the independent claims as is required by the policy. Petitioner should reference each independent claim specifically when discussing the utility of the invention.

Regarding the requirements of section II element 6.5 outlined above, the requirements of this section are not met. A grantable petition requires petitioner to provide a showing of where each limitation of the claims finds specific support (i.e., page and line numbers and element number) under 35 U.S.C. 112, first paragraph, in the written description of the specification, and in each application that the present application claims the benefit of domestic priority. The present petition only identifies substantial portions of text in the instant application only with respect to claim numbers as opposed to the required claim limitations, and ignores the provisional applications for which domestic priority is claimed. The requirement of section II element 6.5 can be satisfied by listing all the presently filed claims and by indicating where the instant application and separately, each one of the priority documents, teach each limitation in each one of said presently filed claims, by indicating the element number and/or the relevant page and line numbers. Applicant's attention is also drawn to the requirements relevant under 35 U.S.C 112, 6th paragraph, listed above. Should this requirement not apply to the present application, Applicant should make a statement in this regard.

DECISION

For the above-stated reasons, the petition is **dismissed**. The application will therefore be taken up by the examiner for action in its regular turn.

Petitioner is given a single opportunity to perfect the petition. Any request for reconsideration of this decision must be submitted within 1 (one) month or 30 (thirty) days, whichever is longer, (no extension of time under 37 CFR 1.136(a)) from the date of this decision in order to be considered timely. Any request for reconsideration must address all of the deficiencies indicated above.

Petitioner is reminded that, upon granting of the special status of the application on request for reconsideration, the application will be processed expeditiously. However, due to the dismissal of the instant petition, examination may not be completed within twelve months of the filing date of the application.

Any inquiry regarding this decision should be directed to Ehud Gartenberg, TC 3700 Special Programs Examiner, at (571) 272-4828. In his absence, an inquiry can be directed to Colleen P. Cooke, Special Program Examiner, at 571 272-1170.

Ehud Gartenberg
Special Programs Examiner
Technology Center 3700

UNITED STATES PATENT AND TRADEMARK OFFICE

Commissioner for Patents
United States Patent and Trademark Office
P.O. Box 1450
Alexandria, VA 22313-1450
www.uspto.gov

BROMBERG & SUNSTEIN LLP
125 SUMMER STREET
BOSTON MA 02110-1618

MAY 27 2008

In re Application of: Fonte, Matthew W.
Serial No.: 12/054,678
Filed: March 25, 2008
Title: **PROXIMALLY SELF-LOCKING LONG BONE PROSTHESIS**

DECISION ON PETITION TO MAKE SPECIAL FOR NEW APPLICATION UNDER 37 C.F.R. § 1.102 & M.P.E.P. § 708.02

This is a decision on the request for reconsideration filed on May 9, 2008 to make the above-identified application special for accelerated examination procedure under 37 C.F.R. § 1.102(d). The request has been treated as a renewed petition to make the above-identified application special and has been viewed as a supplement to and in combination with the original petition which was filed on March 25, 2008 and dismissed in the Office letter of April 9, 2008.

The petition to make the application special is **DENIED.**

REGULATION AND PRACTICE

A grantable petition to make special under 37 C.F.R. § 1.102(d) and pursuant to the "Change to Practice for Petitions in Patent Applications to Make Special and for Accelerated Examination" published in the Federal Register on June 26, 2006 (71 Fed. Reg. 36323), must satisfy the conditions as outlined in the prior petition decision. The conditions are not repeated herein.

REVIEW OF FACTS

As stated in the decision of April 9, 2008 conditions I: 1, 2, 4, II: 1-5, 5.1 5.3, 6, 6.1 and 6.6 were considered to have been met. However, the petition failed to comply with conditions I: 3, II: 5.2, 6.2, 6.3, 6.4 and 6.5. Upon reconsideration, the petition is considered to additionally meet I: 3, II: 5.2, 6.3, 6.4 and 6.5. However, the petition still fails to meet the requirement of section II: 6.2. Therefore, the petition fails to meet the required conditions to be accorded special status under the accelerated examination procedure.

DISCUSSION

The requirements of the Accelerated Examination program were detailed in the dismissal of the petition dated April 9, 2008, and they will not be repeated here. The reasons for denial follow.

The requirement of condition II: 6.2 has not been met, because Applicant apparently failed to properly map claimed limitations unto the most closely related prior art, and to acknowledge some limitations that were so common in the art, that they were no longer referred to in recent applications and patents. The apparent deficiencies are illustrated by way of a few examples.

Example I. On p. 16 of the Accelerated Examination Support Document (AESD), the mapping of the claimed limitations unto Connelly, Applicant writes: "1. A method comprising: providing a sterile (not mentioned) prosthesis .... " A more accurate statement would have been: -- A method comprising: providing a sterile (not mentioned, but routinely used in the art) prosthesis - -.

Example II: on p. 18 of the AESD, the mapping of the claimed invention unto Connelly, Applicant writes:

"16. A method according to claim 15, wherein the bone-locking portion is characterized by a cross-section, the majority of which is composed of <u>shape-memory material</u> <u>(not found).</u>"

And further on the same page:

"17. A prosthesis for use in an arthroplasty (implant 100), the prosthesis comprising:

.....

an expandable (Para. 29; the shape or size may change) bone-locking portion integral to the shaft member comprising a shape-memory material adapted for insertion into an aperture created in a bone (heat absorbent body 22), the shape memory material adapted to radially expand through the formation of <u>austenite</u> in response to <u>a temperature increase after insertion into the aperture (not found)</u> so as to provide a locking-force sufficient to stabilize the prosthesis in the aperture (not found), ... "

However, it appears that Connelly does reveal teachings that are relevant to the underlined limitations. For example:

On p. 2, in paragraph 25, ll. 1-4 Connelly apparently discusses shape memory materials, and on paragraph 26, ll. 3 and 7 he apparently discusses an austenitic state of such materials:

[0025] In this section of the specification, and/or in the remaining sections, reference will be made to the terms "shape memory alloy,""shape memory polymeric material, ", and "shape memory polymer."

[0026] The term "shape memory material" refers to a material that undergoes a transformation from a martensitic phase at low temperature or stress to an austenitic phase at high temperature or stress. When a shape memory material in its martensitic phase is stressed to a specified value, e.g. heated to an activation temperature, the material assumes its austenitic state as it attempts to assume its previously "memorized" or "imprinted" shape. As the stress is removed

And further in paragraphs 26 (shown above), 29 and 30 , Connelly apparently discusses the influence of the increase in temperature on the change of shape of the material (26: 6-7), (29: 2-4), (30: 1-4).

[0029] Referring again to **FIG. 1**, and to the preferred embodiment depicted therein, the heat absorbent body **22** is capable of utilizing body heat to change one or more of its physical properties, such as its size and shape; and it additionally is capable of reverting to its original physical property, with the release of heat, when the ambient temperature to which it is exposed drops. Thus, in one embodiment, the heat absorbent body is capable of reverting to its original size and shape when the temperature of the organism in which it is disposed drops. In this embodiment, heat is first transformed into mechanical motion and is not transferred to the biological organism; and, thereafter, when the ambient temperature drops, heat is then released to the biological organism while the material reverts to its original size and shape.

[0030] The ability of body **22** to change its shape upon being subjected to a temperature within a certain specified range is what is referred to as "heat absorbent" in this specification.

It also appears that Connelly (75: 1-7) uses said shape memory materials as claimed:

[0075] In one embodiment, the second member **104** is comprised of shape memory material. The shape memory material may be a shape memory alloy. Alternatively, or additionally, the shape memory material may be a shape memory polymeric material. Alternatively, or additionally, said shape memory material may be shape memory carbon composite material.

Members 22 and 104 are shown in Fig. 1 (see next page). Thus, the claimed "shape memory material" and "formation of austenite in response to a temperature increase after insertion" appear to be taught by Connelly, and therefore the mapping required some clarifications to resolve or explain why the apparent teachings were designated by the Applicant as "not found". As for the claimed "aperture" it appears to be obvious from the discussion that the member shown in Fig. 1 of Connelly apparently was intended to be inserted in a bone aperture.

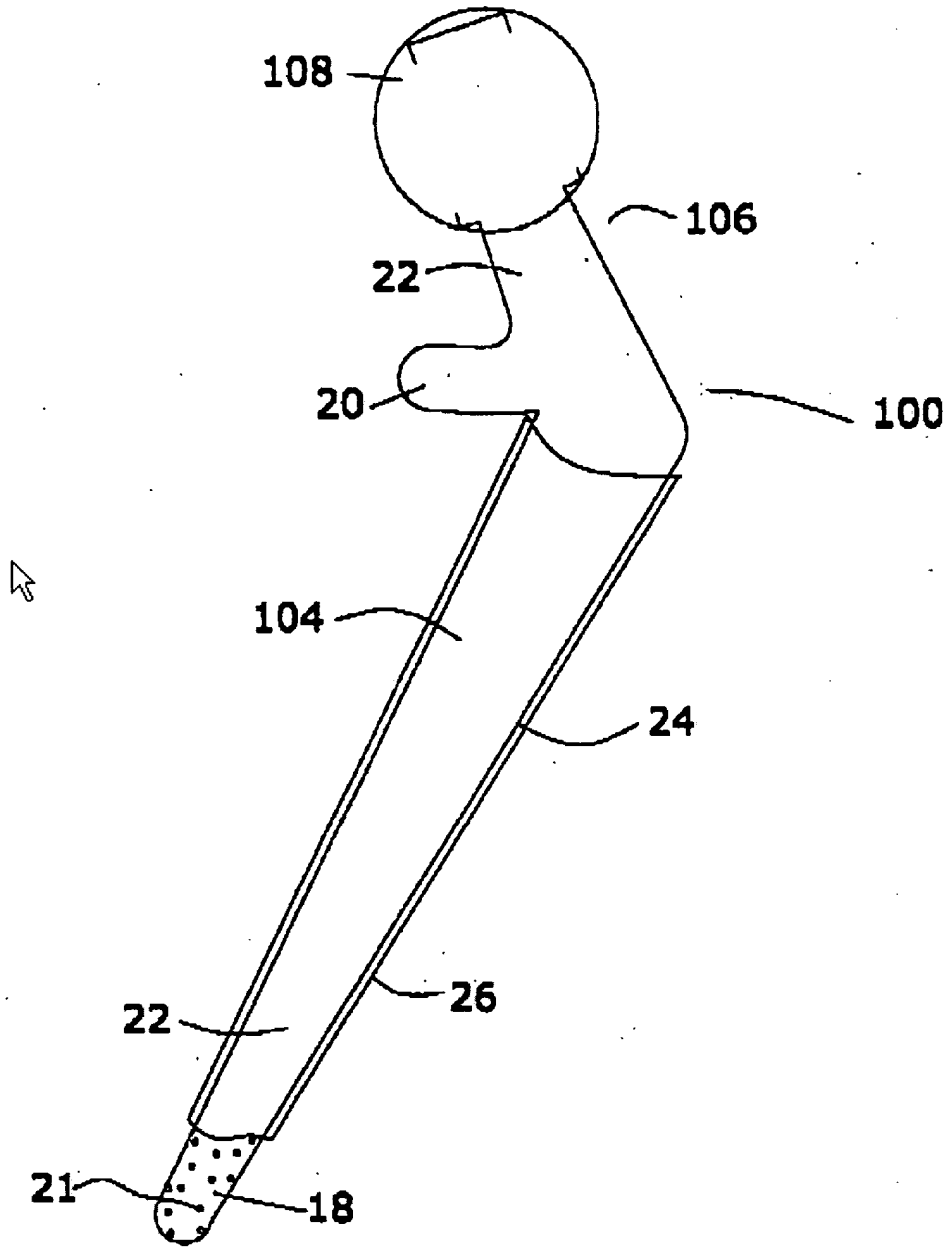

Connelly Figure 1

Example III: with regard to the mapping unto Babalola, Applicant writes on p. 20, ll. 14-16 of the AESD: *"wherein a temperature increase causes a change from the contracted state to the expanded state resulting in expansion of the bone-locking portion (col. 3, 11. 1-3) so as to contact the inner surface (not found),"* . However, it appears that Babalola teaches on col. 4, ll. 41-45:

at high and low temperature phases.

The integral stress bearing region, comprised of alloy **18**, joined to the absorbent body **22**, will consist of pores **21** at the distal end of its stem to act as a means for increasing the anchorage of prosthesis **10**, permitting in-growth of bone into the prosthesis **10**.

From said passage, it appears that "in-growth bone into the prosthesis" suggests contact between the inner surface of the bone and the prosthesis. With regard to the AESD p. 22, ll. 24-25 "*the formation of austenite in response to a temperature increase*", Applicant's attention is drawn to Babalola, col. 3, ll. 41, 48, 51 and 54-60.

The purpose of section II element 6.2 is to map the contours of the prior art, not to disregard teachings that appear to read on claimed limitations however they are used differently than in the prior art. Regardless of the patentability arguments in section II: 6.3, it is Applicant's duty to draw attention to all limitations that are taught in the prior art, and to acknowledge limitations that were routinely practiced in the art, such as sterilizing an artificial implant prior to its deployment. Mapping of limitations and patentability arguments are different and distinct requirements under the present program. Whether the claimed invention defines over the prior art is determined during the later prosecution phase, however the mapping of the limitations has to be complete at this stage of the process.

DECISION

For at least the above-stated reason (for failing to meet the requirement of section II: element 6.2), the petition is **DENIED**. The application will remain in its regular status and will be taken up by the examiner for action in its regular turn.

Petitioner is reminded that a single opportunity to perfect the petition is given. Therefore, further petitions for accelerated examination in this application will not be entertained.

Any inquiry regarding this decision should be directed to Ehud Gartenberg, TC 3700 Special Program Examiner, at (571) 272-4828. In his absence, an inquiry can be directed to J. Harrisnon, Special Program Examiner, at 571 272-4449.

Ehud Gartenberg

Ehud Gartenberg
Special Program Examiner
Technology Center 3700

UNITED STATES PATENT AND TRADEMARK OFFICE

Commissioner for Patents
United States Patent and Trademark Office
P.O. Box 1450
Alexandria, VA 22313-1450
www.uspto.gov

NOVAK DRUCE DELUCA + QUIGG, LLP
1300 EYE STREET NW
SUITE 1000 WEST TOWER
WASHINGTON, DC 20005

COPY MAILED

APR 1 8 2008

OFFICE OF PETITIONS

In re Application of
James W. Hill, et. al.
Application No. 12/054,690
Filed: March 25, 2008
Attorney Docket No. 8234.008.NPUS00

DECISION ON PETITION

This is a decision on the petition under 37 CFR 1.182 filed on March 26, 2008, to change the order of the names of the inventors.

The petition is **granted**.

The order of the names of the inventors has been changed as follows:

1. James W. Hill

2. Christopher G. Preston

3. Michael D. Max

Office records have been corrected to reflect the change in the order of the named inventors. A corrected Filing Receipt, which set forth the desired order of the named inventors, was mailed on April 10, 2008.

It is noted that petitioner submitted $130 for treatment of the instant petition. However, a petition under 37 CFR 1.182 requires a $400 petition fee; therefore, the difference of $270 has been charged to petitioner's deposit account, as authorized.

This application is being referred to the Office of Patent Application Processing.

Telephone inquiries regarding this decision should be directed to the undersigned at (571) 272-3226.

Andrea Smith
Petitions Examiner
Office of Petitions

UNITED STATES PATENT AND TRADEMARK OFFICE

UNITED STATES DEPARTMENT OF COMMERCE
United States Patent and Trademark Office
Address: COMMISSIONER FOR PATENTS
P.O. Box 1450
Alexandria, Virginia 22313-1450
www.uspto.gov

APPLICATION NO.	FILING DATE	FIRST NAMED INVENTOR	ATTORNEY DOCKET NO.	CONFIRMATION NO.
12/054,754	03/25/2008	Laurent Dellmann	CH920070082US1	6652

74599 7590 06/03/2008
Cantor Colburn LLP-IBM Europe
20 Church Street
22nd Floor
Hartford, CT 06103

EXAMINER

ART UNIT	PAPER NUMBER
2874	

MAIL DATE	DELIVERY MODE
06/03/2008	PAPER

Please find below and/or attached an Office communication concerning this application or proceeding.

The time period for reply, if any, is set in the attached communication.

UNITED STATES PATENT AND TRADEMARK OFFICE

Commissioner for Patents
United States Patent and Trademark Office
P.O. Box 1450
Alexandria, VA 22313-1450
www.uspto.gov

Cantor Colburn LLP-IBM Europe
20 Church Street, 22nd Floor
Hartford, CT 06103

In re Application of: DELLMANN *et al.* Serial No.: 12/054,754 Filed: March 25, 2008 Docket: **CH920070082US1** Title: **METHOD OF FORMING A THREE-DIMENSIONAL STACKED OPTICAL DEVICE**	DECISION ON PETITION TO MAKE SPECIAL FOR NEW APPLICATION UNDER 37 C.F.R. § 1.102 & M.P.E.P. § 708.02

This is a decision on the petition filed on March 25, 2008, to make the above-identified application special for accelerated examination procedure under 37 C.F.R. § 1.102(d).

The petition to make the application special is GRANTED.

The application is eligible for accelerated examination and the petition complies with the conditions for granting the application special status pursuant to the "Change to Practice for Petitions in Patent Applications to Make Special and for Accelerated Examination" published June 26, 2006, in the Federal Register. (71 Fed. Reg. 36323).

The prosecution of the instant application will be conducted expeditiously according to the following guidelines.

1. The application will be docketed to an examiner and taken up for action within two weeks of the date of this decision.

2. Restriction Practice:
   If the examiner determines that the claims are not directed to a single invention, a telephone request to elect one single invention will be made pursuant to MPEP 812.01. As a prerequisite to the grant of this petition, the applicant has agreed to make an oral election, by telephone, without traverse. If the applicant refuses to make an election without traverse, or the examiner cannot reach the applicant after a reasonable effort, the examiner will treat the first claimed invention (invention defined by claim 1) as having being constructively elected without traverse for examination.

3. Office action:
   If it is determined that, after appropriate consultation, there is a potential rejection or any other issue to be addressed, the examiner will telephone the applicant and arrange an interview to discuss and resolve the issue. An Office action, other than a Notice of Allowance and Fee(s) Due (Notice of Allowance), will not be issued unless either: 1) an interview was conducted but did not result in agreed to action that places the application in condition for allowance, or, 2) a determination is made that an interview would be unlikely to result in the application being placed in condition for allowance, and 3) an internal conference has been held to review any rejection of any claim.

4. Time for Reply:
   An Office action other than a Notice of Allowance or a final Office action will set a shortened statutory period of one month or thirty days, whichever is longer, for reply with no extension of time available under 37 CFR 1.136(a). Failure to timely file a reply within this non-extendible period for reply will result in the abandonment of the application.

5. Reply by Applicant:
   A timely reply to an Office action other than the Notice of Allowance must be submitted electronically via EFS or EFS-web and limited to addressing the rejections, objections and requirement made. Any amendment that attempts to: 1) add claims which would result in more than three pending independent claims or more than twenty pending total claims; 2) present claims not encompassed by the pre-examination search or an updated accelerated examination support document; or 3) present claims that are directed a non-elected invention or an invention other than that previously claimed and examined in the application, will be treated as not fully responsive and will not be entered.

   For any amendment to the claims (including any new claim) that is not encompassed by the accelerated examination support document, applicant must provide an updated accelerated examination support document that encompasses the amended or new claims at the time of filing of the amendment.

   To proceed expeditiously with the examination, it is recommended that a reply with amendments made to any claim or with any new claim being added be accompanied by an updated accelerated examination support document or a statement explaining how the amended or new claim is supported by the original accelerated examination support document.

6. Information Disclosure Statement (IDS):
   Any IDS filed during prosecution must be submitted electronically via EFS or EFS-web, accompanied by an updated accelerated examination support document, and be in compliance with 37 CFR 1.97 and 1.98.

7. Post-Allowance Processing:
   To expedite processing of the allowed application into a patent, the applicant must: 1) pay the required fees within one month of the date of the Notice of Allowance, and 2) not file any post allowance papers not required by the Office. In no event may the issue fee be paid and accepted later than three months from the date of the Notice of Allowance.

8. After-Final and Appeal Procedures:
   To expedite prosecution, after receiving the final Office action, applicant must: 1) promptly file a notice of appeal, an appeal brief and appeal fees; and 2) not request a pre-appeal brief conference.

   Any amendment, affidavit or other evidence filed after final Office action must comply with applicable rules and the requirements outlined in numbered paragraphs 5 and 6 above.

   On appeal, the application will proceed according to normal appeal procedures. After appeal, the application will again be treated special.

9. Proceedings Outside the Normal Examination Process:
   If the application becomes involved in a proceeding that is outside the normal examination process (e.g., a secrecy order, national security review, interference proceeding, petitions under 37 CFR 1.181, 182 or 183), the application will be treated special before and after such proceeding.

10. Final Disposition:
    The twelve month goal of this accelerated examination procedure ends with a final disposition. The mailing of a final Office action, a Notice of Allowance, the filing of a Notice of Appeal, or the filing of a Request for Continued Examination (RCE) is the final disposition.

If, during prosecution, a paper is not filed electronically using EFS-web, a reply is filed but is not fully responsive, the application is involved in an appeal, or a proceeding outside normal examination process, the application will still be examined expeditiously, however, the final disposition may occur more than twelve months from the filing of the application.

Any inquiry regarding this decision should be directed to the undersigned at (571) 272-1594.

Clayton E. LaBalle

Clayton E. LaBalle, T-QAS
Technology Center 2800 - Semiconductors,
Electrical & Optical Systems & Components

UNITED STATES PATENT AND TRADEMARK OFFICE

Commissioner for Patents
United States Patent and Trademark Office
P.O. Box 1450
Alexandria, VA 22313-1450
www.uspto.gov

COPY MAILED

APR 16 2009

OFFICE OF PETITIONS

Ward and Smith, P.A.
1001 College Court
P.O. Box 867
New Bern, NC 28563-0867

In re Application of	:	
Claudia S. Barrett et al.	:	
Application No. 12/054,779	:	DECISION ON PETITION
Filed: March 25, 2008	:	TO WITHDRAW
Attorney Docket No. 1342-0020	:	FROM RECORD
	:	

This is a decision on the Request to Withdraw as attorney or agent of record under 37 C.F.R. § 1.36(b), filed January 23, 2009.

The request is **moot because a revocation of power of attorney has been filed**.

A review of the file record indicates that the power of attorney to E. Eric Mills and all attorneys/agents of record have been revoked by the assignee of the patent application on March 24, 2009. Accordingly, the request to withdraw under 37 C.F.R. § 1.36(b) is moot.

All future communications from the Office will be directed to the below-listed address until otherwise notified by applicant.

Telephone inquires concerning this decision should be directed to Kimberly Inabinet at 571-272- 4618.

Kimberly Inabinet
Petitions Examiner
Office of Petitions

cc: IBM-Rochester
c/o Toler Law Group
8500 Bluffstone Cove, Suite A201
Austin, TX 78759

UNITED STATES PATENT AND TRADEMARK OFFICE

UNITED STATES DEPARTMENT OF COMMERCE
United States Patent and Trademark Office
Address: COMMISSIONER FOR PATENTS
P.O. Box 1450
Alexandria, Virginia 22313-1450
www.uspto.gov

APPLICATION NO.	FILING DATE	FIRST NAMED INVENTOR	ATTORNEY DOCKET NO.	CONFIRMATION NO.
12/054,784	03/25/2008	Laurent Dellmann	CH920080005US1	6694

74599 7590 06/27/2008
Cantor Colburn LLP-IBM Europe
20 Church Street
22nd Floor
Hartford, CT 06103

EXAMINER
CONNELLY CUSHWA, MICHELLE R

ART UNIT	PAPER NUMBER
2874	

MAIL DATE	DELIVERY MODE
06/27/2008	PAPER

Please find below and/or attached an Office communication concerning this application or proceeding.

The time period for reply, if any, is set in the attached communication.

UNITED STATES PATENT AND TRADEMARK OFFICE

Commissioner for Patents
United States Patent and Trademark Office
P.O. Box 1450
Alexandria, VA 22313-1450
www.uspto.gov

Cantor Colburn LLP-IBM Europe
20 Church Street
22nd Floor
Hartford, CT 06103

In re Application of:	:	
Laurent Dellmann et al.	:	DECISION ON PETITION TO
Serial No.: 12/054,784	:	MAKE SPECIAL FOR NEW
Filed: March 25, 2008	:	APPLICATION UNDER 37
Attorney Docket No.: CH920080005US1	:	C.F.R. § 1.102 & M.P.E.P. § 708.2
Title: METHOD OF FORMING A THREE-DIMENSIONAL STACKED OPTICAL DEVICE	:	

This is a decision on the petition filed on March 25, 2008 to make the above-identified application special for accelerated examination procedure under 37 C.F.R. § 1.102(d).

The petition to make the application special is **DISMISSED**.

REGULATION AND PRACTICE

A grantable petition to make special under 37 C.F.R. § 1.102(d) and pursuant to the "Change to Practice for Petitions in Patent Applications to Make Special and for Accelerated Examination" published in the Federal Register on June 26, 2006 (71 Fed. Reg. 36323), must satisfy the following conditions:

I. Conditions Regarding the Application:

1. the application must be a non-reissue utility or design application filed under 37 CFR 1.111(a);
2. the application, the petition and the required fees must be filed electronically using the USPTO's electronic filing system (EFS), or EFS-web; if not filed electronically, a statement asserting that EFS and EFS-web were not available during the normal business hours.
3. at the time of filing, the application must be complete under 37 CFR 1.51 and in condition for examination;
4. the application must contain three or fewer independent claims and twenty or fewer total claims and the claims must be directed to a single invention.

II. Conditions Regarding the Petition:

The petition must:

1. be filed with the application;

2. include a statement that applicant agrees not to separately argue the patentability of any independent claim during any appeal in the application;

3. include a statement that applicant agrees to make an election without traverse in a telephone interview;

4. include a statement that applicant agrees to conduct such an interview when requested by the examiner; and

5. include a statement, made based on a good faith belief, that a preexamination search in compliance with the following requirements, was conducted, including an identification of the field of search by United States class and subclass, where applicable, and for database searches, the search logic or chemical structure or sequence used as a query, the name of the file(s) searched and the database service, and the date of the search.

The preexamination search must:

5.1 involve U.S. patents and patent application publications, foreign patent documents, and non-patent literature, unless the applicant can justify with reasonable certainty that no references more pertinent than those already identified are likely to be found in the eliminated sources and includes such a justification with this statement;

5.2. be directed to the claimed invention and encompass all of the features of the claims, giving the claims the broadest reasonable expectation; and

5.3. encompass the disclosed features that may be claimed.

6. must provide in support of the petition an accelerated examination support document. An accelerated examination support document must include:

6.1. an information disclosure statement (IDS) in compliance with 37 CFR 1.98 citing each reference deemed most closely related to the subject matter of each of the claims;

6.2. an identification of all the limitations in the claims that are disclosed by the reference specifying where the limitation is disclosed in the cited reference;

6.3. a detailed explanation of how each of the claims is patentable over the references cited with particularity required by 37 CFR 1.111(b) and (c);

6.4. a concise statement of the utility of the invention as defined in each of the independent claims (unless the application is a design application);

6.5. a showing of where each limitation of the claims finds support under 35 USC 112, first paragraph, in the written description of the specification. If applicable, the showing must also identify: (1) each means- (or step) plus-function claim element that invokes consideration under 35 USC 112, sixth paragraph; and (2) the structure, material, or acts in the specification that corresponds to each means- (or step) plus-function claim element that invokes consideration under 35 USC 112, sixth paragraph; if the application claims the benefit of one or more applications under title 35, United States Code, the showing must also include where each limitation of the claims finds support under 35 USC 112, first paragraph, in each such application in which such supports exists; and

6.6. an identification of any cited references that may be disqualified under 35 USC 103(c).

REVIEW OF FACTS

The conditions set forth in I. 1-4 and II. 1-4 are considered to have been met. However, the petition fails to comply with the all the conditions set forth in II. 5 (specifically II. 5.2 and 5.3) and II. 6 (specifically II. 6.1, 6.2 and 6.3). Therefore, the petition fails to meet the required conditions to be accorded special status under the accelerated examination procedure.

Regarding conditions II. 5.2 and 5.3, the preexamination search is required to give the claim its broadest reasonable interpretation, encompass all the features of the present claim and encompass disclosed features that may be claimed later. Both the text search and the classified search are too limiting. The text search is limited to "semiconductor" when the claims and the specification never even use the term. The classified search is limited to class 257 and class 361. The following search areas which were not included in applicant's search have been identified by the examiner as critical search areas: class 385/subclass 14 and class 438/subclasses 26, 29, 64 and 69. Any renewed petition should include a search of the above areas.

Regarding condition 6.1, the IDS supporting the petition is required to cite each reference deemed most closely related to the subject matter of the claims. The IDS only lists U.S. Patent No. 7,215,032 to Trezza and U.S. Patent Application Publication No. 20070222050 to Lee et al. as the only two such references. However, the examination support document gives an identification of all the limitations in the claims that are disclosed by U.S. Patent 7,271,461 to Dutta. This is at least an indication that applicant also deems the Dutta reference as most closely related to the subject matter of the claims.

Regarding condition II. 6.2, an identification of all the limitations in the claims that are disclosed by the reference specifying where the limitation is disclosed in the cited reference is required. The Trezza reference is listed as a reference deemed most closely related to the subject matter of the claims but the examination support document does not identify all the limitations in the claims that are disclosed by the Trezza reference or where these limitations are disclosed in the reference.

Regarding the condition II. 6.3, it requires a detailed explanation of how each of the claims is patentable over the references cited with the particularity required by 37 CFR 1.111(b) and (c). More specifically, 37 CFR 1.111(b) and (c) require applicant to present arguments pointing out the specific distinctions believed to render the claims patentable over the cited references and that applicant clearly point out the patentable novelty which he or she thinks the claims present in view of the state of the art disclosed by the references cited. The examination support document states that "(n)one of the references deemed most closely related teach a stacked optical device where arranged in the particular configuration required by claim 1. Following this statement is what appears to be a general description of the disclosed invention. It includes such sentences such as "(t)his configuration forms a stacked opto-electronic component having a small footprint" when the footprint and its size are not claimed features. This is not the particularity required by 37 CFR 1.111(b) and (c).

Furthermore, even assuming that the phrase "(n)one of the references deemed most closely related teach . . ." includes the Lee et al. reference, the Treza reference and the Dutta reference, such a phrase only covers novelty, it does not cover obviousness.

DECISION

For the above-stated reasons, the petition is **dismissed**. The application will therefore be taken up by the examiner for action in its regular turn.

Petitioner is given a single opportunity to perfect the petition. Any request for reconsideration of this decision must be submitted within 1 (one) month or 30 (thirty) days, whichever is longer,

from the date of this decision in order to be considered timely. Any request for reconsideration must address the deficiencies indicated above.

Petition is reminded that, upon granting of the special status of the application on request for reconsideration, the application will be processed expeditiously. However, due to the dismissal of the instant petition, examination may not be completed within twelve months of the filing date of the application.

Any inquiry regarding this decision should be directed to the undersigned at (571) 272-1638.

Edward Westin

Edward Westin, Quality Assurance Specialist
Technology Center 2800
Semiconductors, Electrical and Optical
Systems and Components

UNITED STATES PATENT AND TRADEMARK OFFICE

UNITED STATES DEPARTMENT OF COMMERCE
United States Patent and Trademark Office
Address: COMMISSIONER FOR PATENTS
P.O. Box 1450
Alexandria, Virginia 22313-1450
www.uspto.gov

APPLICATION NO.	FILING DATE	FIRST NAMED INVENTOR	ATTORNEY DOCKET NO.	CONFIRMATION NO.
12/054,784	03/25/2008	Laurent Dellmann	CH920080005US1	6694

74599 7590 08/12/2008
Cantor Colburn LLP-IBM Europe
20 Church Street
22nd Floor
Hartford, CT 06103

EXAMINER
CONNELLY CUSHWA, MICHELLE R

ART UNIT	PAPER NUMBER
2874	

MAIL DATE	DELIVERY MODE
08/12/2008	PAPER

Please find below and/or attached an Office communication concerning this application or proceeding.

The time period for reply, if any, is set in the attached communication.

UNITED STATES PATENT AND TRADEMARK OFFICE

Commissioner for Patents
United States Patent and Trademark Office
P.O. Box 1450
Alexandria, VA 22313-1450
www.uspto.gov

Cantor Colburn LLP-IBM Europe
20 Church Street
22nd Floor
Hartford, CT 06103

In re Application of:	:	
Laurent Dellmann et al.	:	DECISION ON RENEWED
Serial No.: 12/054,784	:	PETITION TO MAKE SPECIAL
Filed: March 25, 2008	:	UNDER 37 C.F.R. § 1.102
Attorney Docket No.: CH920080005US1	:	& M.P.E.P. § 708.2
Title: METHOD OF FORMING A THREE-DIMENSIONAL STACKED OPTICAL DEVICE	:	

This is a decision on the renewed petition filed on July 24, 2008 to make the above-identified application special for accelerated examination procedure under 37 C.F.R. §1.102(d).

The renewed petition to make the application special is GRANTED.

The application is eligible for accelerated examination and the petition complies with the conditions for granting the application special status pursuant to the "Change to Practice for Petitions in Patent Applications to Make Special and for Accelerated Examination" published June 26, 2006, in the Federal Register. (71 Fed. Reg. 36323).

The prosecution of the instant application will be conducted expeditiously according to the following guidelines.

1. The application will be docketed to an examiner and taken up for action within two weeks of the date of this decision.

2. Restriction Practice:
   If the examiner determines that the claims are not directed to a single invention, a telephone request to elect one single invention will be made pursuant to MPEP 812.01. As a prerequisite to the grant of this petition, the applicant has agreed to make an oral election, by telephone, without traverse. If the applicant refuses to make an election without traverse, or the examiner cannot reach the applicant after a reasonable effort, the examiner will treat the first claimed invention (invention defined by claim 1) as having being constructively elected without traverse for examination.

3. Office action:
   If it is determined that, after appropriate consultation, there is a potential rejection or any other issue to be addressed, the examiner will telephone the applicant and arrange an

interview to discuss and resolve the issue. An Office action, other than a Notice of Allowance and Fee(s) Due (Notice of Allowance), will not be issued unless either: 1) an interview was conducted but did not result in agreed to action that places the application in condition for allowance, or, 2) a determination is made that an interview would be unlikely to result in the application being placed in condition for allowance, and 3) an internal conference has been held to review any rejection of any claim.

4. Time for Reply:
An Office action other than a Notice of Allowance or a final Office action will set a shortened statutory period of one month or thirty days, whichever is longer, for reply with no extension of time available under 37 C.F.R. §1.136(a). Failure to timely file a reply within this non-extendible period for reply will result in the abandonment of the application.

5. Reply by Applicant:
A timely reply to an Office action other than the Notice of Allowance must be submitted electronically via EFS or EFS-web and limited to addressing the rejections, objections and requirement made. Any amendment that attempts to: 1) add claims which would result in more than three pending independent claims or more than twenty pending total claims; 2) present claims not encompassed by the pre-examination search or an updated accelerated examination support document; or 3) present claims that are directed a non-elected invention or an invention other than that previously claimed and examined in the application, will be treated as not fully responsive and will not be entered.

   For any amendment to the claims (including any new claim) that is not encompassed by the accelerated examination support document, applicant must provide an updated accelerated examination support document that encompasses the amended or new claims at the time of filing of the amendment.

   To proceed expeditiously with the examination, it is recommended that a reply with amendments made to any claim or with any new claim being added be accompanied by an updated accelerated examination support document or a statement explaining how the amended or new claim is supported by the original accelerated examination support document.

6. Information Disclosure Statement (IDS):
Any IDS filed during prosecution must be submitted electronically via EFS or EFS-web, accompanied by an updated accelerated examination support document, and be in compliance with 37 C.F.R. §1.97 and §1.98.

7. Post-Allowance Processing:
To expedite processing of the allowed application into a patent, the applicant must: 1) pay the required fees within one month of the date of the Notice of Allowance, and 2) not file any post allowance papers not required by the Office. In no event may the issue fee be paid and accepted later than three months from the date of the Notice of Allowance.

8. After-Final and Appeal Procedures:
   To expedite prosecution, after receiving the final Office action, applicant must: 1) promptly file a notice of appeal, an appeal brief and appeal fees; and 2) not request a pre-appeal brief conference.

   Any amendment, affidavit or other evidence filed after final Office action must comply with applicable rules and the requirements outlined in numbered paragraphs 5 and 6 above.

   On appeal, the application will proceed according to normal appeal procedures. After appeal, the application will again be treated special.

9. Proceedings Outside the Normal Examination Process:
   If the application becomes involved in a proceeding that is outside the normal examination process (e.g., a secrecy order, national security review, interference proceeding, petitions under 37 C.F.R. §1.181, §1.182 or §1.183), the application will be treated special before and after such proceeding.

10. Final Disposition:
    The twelve-month goal of this accelerated examination procedure ends with a final disposition. The mailing of a final Office action, a Notice of Allowance, the filing of a Notice of Appeal, or the filing of a Request for Continued Examination (RCE) is the final disposition.

If, during prosecution, a paper is not filed electronically using EFS-web, a reply is filed but is not fully responsive, the application is involved in an appeal, or a proceeding outside normal examination process, the application will still be examined expeditiously, however, the final disposition may occur more than twelve months from the filing of the application.

Any inquiry regarding this decision should be directed to the undersigned at (571) 272-1638.

Edward Westin

Edward Westin, Quality Assurance Specialist
Technology Center 2800
Semiconductors, Electrical and Optical
Systems and Components

UNITED STATES PATENT AND TRADEMARK OFFICE

UNITED STATES DEPARTMENT OF COMMERCE
United States Patent and Trademark Office
Address: COMMISSIONER FOR PATENTS
P.O. Box 1450
Alexandria, Virginia 22313-1450
www.uspto.gov

APPLICATION NO.	FILING DATE	FIRST NAMED INVENTOR	ATTORNEY DOCKET NO.	CONFIRMATION NO.
12/054,791	03/25/2008	Carl H. Fisher	AUS920070781US1	6708

59401 7590 05/08/2008
CANTOR COLBURN LLP - IBM AUSTIN
20 Church Street
22nd Floor
Hartford, CT 06103

EXAMINER
STAMBER, ERIC W

ART UNIT	PAPER NUMBER
3622	

MAIL DATE	DELIVERY MODE
05/08/2008	PAPER

Please find below and/or attached an Office communication concerning this application or proceeding.

The time period for reply, if any, is set in the attached communication.

UNITED STATES PATENT AND TRADEMARK OFFICE

Commissioner for Patents
United States Patent and Trademark Office
P.O. Box 1450
Alexandria, VA 22313-1450
www.uspto.gov

MAILED
FROM DIRECTORS OFFICE
MAY 07 2008
TECHNOLOGY CENTER 3600

CANTOR COLBURN LLP - IBM AUSTIN
20 CHURCH STREET
22nd FLOOR
HARTFORD, CT 06103

In re application of
Fisher et al.
Application No. 12/054,791
Filed: March 25, 2008
For: SYSTEMS, METHODS AND COMPUTER PRODUCTS FOR A PERSONAL PORTABLE ADVERTISING AND MESSAGING AGENT

: **DECISION ON PETITION**
: **TO MAKE SPECIAL FOR**
: **NEW APPLICATION**
: **UNDER 37 CFR 1.102**

This is a decision on the petition filed on March 25, 2008 to make the above-identified application special for accelerated examination procedure under 37 C.F.R. § 1.102(d).

The petition to make the application special is **DISMISSED**.

REGULATION AND PRACTICE

A grantable petition to make special under 37 C.F.R. § 1.102(d) and pursuant to the "Change to Practice for Petitions in Patent Applications to Make Special and for Accelerated Examination (AE)" published in the Federal Register on June 26, 2006 (71 Fed. Reg. 36323), must satisfy the following conditions:

I. Conditions Regarding the Application:

1. the application must be a non-reissue utility or design application filed under 37 CFR 1.111(a);

2. the application, the petition and the required fees must be filed electronically using the USPTO's electronic filing system (EFS), or EFS-web; if not filed electronically, a statement asserting that EFS and EFS-web were not available during the normal business hours.

3. at the time of filing, the application must be complete under 37 CFR 1.51 and in condition for examination;

4. the application must contain three or fewer independent claims and twenty or fewer total claims and the claims must be directed to a single invention.

II. Conditions Regarding the Petition:

The petition must:

1. be filed with the application;

2. include a statement that applicant agrees not to separately argue the patentability of any independent claim during any appeal in the application;

3. include a statement that applicant agrees to make an election without traverse in a telephone interview.

4. include a statement that applicant agrees to conduct such an interview when requested by the examiner.

5. include a statement, made based on a good faith belief, that a preexamination search in compliance with the following requirements, was conducted, including an identification of the field of search by United States class and subclass, where applicable, and for database searches, the search logic or chemical structure or sequence used as a query, the name of the file(s) searched and the database service, and the date of the search.

The preexamination search must:

5.1 involve U.S. patents and patent application publications, foreign patent documents, and non-patent literature, unless the applicant can justify with reasonable certainty that no references more pertinent than those already identified are likely to be found in the eliminated sources and includes such a justification with this statement;

5.2. be directed to the claimed invention and encompass all of the features of the claims, giving the claims the broadest reasonable interpretation;

5.3. encompass the disclosed features that may be claimed.

6. must provide in support of the petition an accelerated examination support document.

An accelerated examination support document must include:

6.1. an information disclosure statement (IDS) in compliance with 37 CFR 1.98 citing each reference deemed most closely related to the subject matter of each of the claims;

6.2. an identification of all the limitations in the claims that are disclosed by the reference specifying where the limitation is disclosed in the cited reference;

6.3. a detailed explanation of how each of the claims is patentable over the references cited with particularity required by 37 CFR 1.111(b) and (c);

6.4. a concise statement of the utility of the invention as defined in each of the independent claims (unless the application is a design application);

6.5. a showing of where **each limitation** of the claims finds support under 35 USC 112, first paragraph, in the written description of the specification. If applicable, the showing must also identify: (1) each means- (or step) plus-function claim element that invokes consideration under 35 USC 112, sixth paragraph; and (2) the structure, material, or acts

in the specification that corresponds to each means- (or step) plus-function claim element that invokes consideration under 35 USC 112, sixth paragraph; if the application claims the benefit of one or more applications under title 35, United States Code, the showing must also include where each limitation of the claims finds support under 35 USC 112, first paragraph, in each such application in which such supports exists;

6.6. an identification of any cited references that may be disqualified under 35 USC 103(c).

REVIEW OF FACTS

The petition in this case fails to comply with condition II.5.2 and II.6.5.

As per Condition II.5.2, the preexamination search must be directed to the claimed invention and encompass all of the features of the claims, giving the claims the broadest reasonable interpretation.

Section 9 (c) of applicant's AE support document asserts, for claim 1, that the categories include a long list of item such as vehicle for sale, dwelling for sale, dwelling for rent,... is a reason for patentability, but these features are not included in the patent text searches and the search is too narrow in the NPL search. For example, most of the text search is redundant with the classification search. Two lines include text terms. One of these lines, in combination with class 705/26 uses the terms "gps" and "billboard" which have been randomly plucked from a three page claim. The other line includes "broadcast$", "advertis$" and "radio" with class 705/114 (This should be 705/14). These terms do not relate well to the overall concept of the invention or specific features of the invention. Getting back to the above list, broadest reasonable interpretation could be shown in a text search by the use of synonyms. In this current limitation, by example, "house", "townhouse or (row adj house)", "(condo or condominium)", "room" and "apartment" would be good search terms in addition to "dwelling". As for finding an inclusive list identical to the eclectic list, a search for electronic classified ads may help and the concept of obviousness should be explored for combining different fields in one accessible database. As for the NPL search, it may help to combine the elements progressively, and then combine the two or three most comprehensive references.

Section 9 (c) of applicant's AE support document asserts that prompting a user, by a device, to provide specifics of subcategories including price and terms, but the feature of a "price" and "terms" is not included in the patent text search. In addition to the above related terms such as "interactive" or "menu" may inherently prompt user to look at subcategory information.

It would be helpful for applicant to apply the above search strategy to each assertion of patentability. The process of iteratively searching for claim elements and determining obviousness as one narrows down the claim elements that make the invention patentable over the prior art is very helpful.

As a starting point for a possible search string for claim 1, the following is provided. Plurals on.

Concept
Line 1 electronic same (classified near3 (ad or advertis$))

Specific feature search
Line 2 ((vehicle or car or truck or auto) and (house or townhouse or (row adj house) or condo or condominium or room or apartment)) and (sale and rent)
Line 3 personals and (yard adj sale)
Line 4 2 and 3
Line 5 heating and cooling and repair and storage
Line 6 (5 and 1) or (5 and 2)
keep grouping and combining until all items are found or are considered to be patentable

A newspaper search (electronic or paper) may be a good source for finding the multiple categories. Also Craigslist.org might be a good source.

This is just a sample search. The mere copying of this search will not comply with the requirement. It is assumed that an actual search would be customized for each independent claim, would include separate searches for dependent limitations for obviousness consideration and would dynamically evolve based upon results. Additional guidance regarding the proper manner of performing and documenting a preexamination search may be found on the following web site: http://www.uspto.gov/web/patents/accelerated/

In regards to condition II.6.5, an accelerated examination support document must include a showing of where each limitation of the claims finds support under 35 USC 112, first paragraph, in the written description of the specification.

Applicant's showing of support does not show where each limitation is in the specification. It is a very broad recitation. Applicant may want to use a similar format as was used in section 9(B) for showing limitations disclosed by the references, but showing the 35 USC 112, 1st support for each limitation of the claims.

The petition fails to meet the required conditions to be accorded special status under the accelerated examination procedure.

DECISION

For the above stated reasons, the petition is **DISMISSED**. The application will therefore be taken up by the examiner for action in its regular turn.

Petitioner is given a single opportunity to perfect the petition. Any request for reconsideration of this decision must be submitted within one (1) month or thirty (30) days, whichever is longer, from the date of this decision. No extensions of time will be granted under 37 CFR 1.136(a) if the request is to be considered timely. Any request for reconsideration must address the deficiencies indicated above.

Petitioner is reminded that, upon granting of the special status of the application on request for reconsideration, the application will be processed expeditiously. However, due to the dismissal of the instant petition, examination may not be completed within twelve months of the filing date of the application.

Any inquiry regarding this decision should be directed to Robert Weinhardt, Business Practice Specialist, at (571) 272-6633. Inquiries may also be directed to Michael Cuff at (571) 272-6778.

Robert A. Weinhardt,
Business Practice Specialist
Technology Center 3600

RW/MAC/05/07/08

UNITED STATES PATENT AND TRADEMARK OFFICE

UNITED STATES DEPARTMENT OF COMMERCE
United States Patent and Trademark Office
Address: COMMISSIONER FOR PATENTS
P.O. Box 1450
Alexandria, Virginia 22313-1450
www.uspto.gov

APPLICATION NO.	FILING DATE	FIRST NAMED INVENTOR	ATTORNEY DOCKET NO.	CONFIRMATION NO.
12/054,791	03/25/2008	Carl H. Fisher	AUS920070781US1	6708

59401 7590 07/07/2008
CANTOR COLBURN LLP - IBM AUSTIN
20 Church Street
22nd Floor
Hartford, CT 06103

EXAMINER
STAMBER, ERIC W

ART UNIT	PAPER NUMBER
3622	

MAIL DATE	DELIVERY MODE
07/07/2008	PAPER

Please find below and/or attached an Office communication concerning this application or proceeding.

The time period for reply, if any, is set in the attached communication.

UNITED STATES PATENT AND TRADEMARK OFFICE

Commissioner for Patents
United States Patent and Trademark Office
P.O. Box 1450
Alexandria, VA 22313-1450
www.uspto.gov

MAILED
FROM DIRECTORS OFFICE

JUL 03 2008

TECHNOLOGY CENTER 3600

CANTOR COLBURN LLP - IBM AUSTIN
20 Church Street
22nd Floor
Hartford CT 06103

In re application of : **DECISION ON PETITION**
Fisher et al. : **TO MAKE SPECIAL FOR**
Application No. 12/054,791 : **NEW APPLICATION**
Filed: March 25, 2008 : **UNDER 37 CFR 1.102**
For: SYSTEMS, METHODS AND COMPUTER PRODUCTS FOR A PERSONAL PORTABLE ADVERTISING AND MESSAGING AGENT

This is a decision on the petition filed on March 25, 2008 and the supplemental petition documents filed June 6, 2008 to make the above-identified application special for accelerated examination procedure under 37 C.F.R. § 1.102(d).

The petition to make the application special is **GRANTED**.

The application is eligible for accelerated examination and the petition complies with the conditions for granting the application special status pursuant to the "Change to Practice for Petitions in Patent Applications to Make Special and for Accelerated Examination" published June 26, 2006, in the Federal Register. (71 Fed. Reg. 36323).

The prosecution of the instant application will be conducted expeditiously according to the following guidelines.

1. The application will be docketed to an examiner and taken up for action within two weeks of the date of this decision.

2. Restriction Practice:
If the examiner determines that the claims are not directed to a single invention, a telephone request to elect one single invention will be made pursuant to MPEP 812.01. As a prerequisite to the grant of this petition, the applicant has agreed to make an oral election, by telephone, without traverse. If the applicant refuses to make an election without traverse, or the examiner cannot reach the applicant after a reasonable effort, the examiner will treat the

first claimed invention (invention defined by claim 1) as having being constructively elected without traverse for examination.

3. Office action:
   If it is determined that, after appropriate consultation, there is a potential rejection or any other issue to be addressed, the examiner will telephone the applicant and arrange an interview to discuss and resolve the issue. An Office action, other than a Notice of Allowance and Fee(s) Due (Notice of Allowance), will not be issued unless either: 1) an interview was conducted but did not result in agreed to action that places the application in condition for allowance, or, 2) a determination is made that an interview would be unlikely to result in the application being placed in condition for allowance, and 3) an internal conference has been held to review any rejection of any claim.

4. Time for Reply:
   An Office action other than a Notice of Allowance or a final Office action will set a shortened statutory period of one month or thirty days, whichever is longer, for reply with no extension of time available under 37 CFR 1.136(a). Failure to timely file a reply within this non-extendible period for reply will result in the abandonment of the application.

5. Reply by Applicant:
   A timely reply to an Office action other than the Notice of Allowance must be submitted electronically via EFS or EFS-web and limited to addressing the rejections, objections and requirement made. Any amendment that attempts to: 1) add claims which would result in more than three pending independent claims or more than twenty pending total claims; 2) present claims not encompassed by the pre-examination search or an updated accelerated examination support document; or 3) present claims that are directed to a non-elected invention or an invention other than that previously claimed and examined in the application, will be treated as not fully responsive and will not be entered.

   For any amendment to the claims (including any new claim) that is not encompassed by the accelerated examination support document, applicant must provide an updated accelerated examination support document that encompasses the amended or new claims at the time of filing of the amendment.

   To proceed expeditiously with the examination, it is recommended that a reply with amendments made to any claim or with any new claim being added be accompanied by an updated accelerated

examination support document or a statement explaining how the amended or new claim is supported by the original accelerated examination support document.

6. Information Disclosure Statement (IDS):
   Any IDS filed during prosecution must be submitted electronically via EFS or EFS-web, accompanied by an updated accelerated examination support document, and be in compliance with 37 CFR 1.97 and 1.98.

7. Post-Allowance Processing:
   To expedite processing of the allowed application into a patent, the applicant must: 1) pay the required fees within one month of the date of the Notice of Allowance, and 2) not file any post allowance papers not required by the Office. In no event may the issue fee be paid and accepted later than three months from the date of the Notice of Allowance.

8. After-Final and Appeal Procedures:
   To expedite prosecution, after receiving the final Office action, applicant must: 1) promptly file a notice of appeal, an appeal brief and appeal fees; and 2) not request a pre-appeal brief conference.

   Any amendment, affidavit or other evidence filed after final Office action must comply with applicable rules and the requirements outlined in numbered paragraphs 5 and 6 above.

   On appeal, the application will proceed according to normal appeal procedures. After appeal, the application will again be treated special.

9. Proceedings Outside the Normal Examination Process:
   If the application becomes involved in a proceeding that is outside the normal examination process (e.g., a secrecy order, national security review, interference proceeding, petitions under 37 CFR 1.181, 182 or 183), the application will be treated special before and after such proceeding.

10. Final Disposition:
    The twelve month goal of this accelerated examination procedure ends with a final disposition. The mailing of a final Office action, a Notice of Allowance, the filing of a Notice of Appeal, or the filing of a Request for Continued Examination (RCE) is the final disposition.

    If, during prosecution, a paper is not filed electronically using EFS-web, a reply is filed but is not fully responsive, the application is

involved in an appeal, or a proceeding outside normal examination process, the application will still be examined expeditiously, however, the final disposition may occur more than twelve months from the filing of the application.

Any inquiry regarding this decision should be directed to Robert Weinhardt at (571) 272-6633, or C. Michelle Tarae at (571) 272-6727, both Business Practice Specialists.

C. Michelle Tarae

C. Michelle Tarae
Business Practice Specialist
Technology Center 3600

RW/CMT/7/1/08

UNITED STATES PATENT AND TRADEMARK OFFICE

UNDER SECRETARY OF COMMERCE FOR INTELLECTUAL PROPERTY AND
DIRECTOR OF THE UNITED STATES PATENT AND TRADEMARK OFFICE
WASHINGTON, DC 20231
www.uspto.gov

MAR 26 2009

Birch, Stewart, Kolasch & Birch
P.O. Box 747
Falls Church, VA 22040-0747

In re application of	:	DECISION ON REQUEST TO
Masahiro Matsushita et al.	:	PARTICIPATE IN PATENT
Application No. 12/054,832	:	PROSECUTION HIGHWAY
Filed: March 25, 2008	:	PROGRAM AND PETITION
For: DOUBLE-CLUTCH TRANSMISION	:	TO MAKE SPECIAL UNDER
	:	37 CFR 1.102(d)

This is a decision on the request to participate in the Patent Prosecution Highway (PPH) program and the petition under 37 CFR 1.102(d), filed March 20, 2009, to make the above-identified application special.

The request and petition are **DISMISSED**.

A grantable request to participate in the PPH pilot program and petition to make special require:

(1) The U.S. application must validly claim priority under 35 U.S.C. 119(a) to one or more applications filed in the JPO;

(2) Applicant must submit a copy of the allowable/patentable claim(s) from the JPO application(s) along with an English translation thereof if the JPO application is in a language other than English and a statement that the English translation is accurate;

(3) All the claims in the U.S. application must sufficiently correspond or be amended to sufficiently correspond to the allowable/patentable claim(s) in the JPO application(s);

(4) Examination of the U.S. application has not begun;

(5) Applicant must submit a copy of all the Office actions from each of the JPO application(s) containing the allowable/patentable claim(s);

(6) Applicant must submit an IDS listing the documents cited by the foreign examiner in the JPO Office action along with copies of documents except U.S. patents or U.S. patent application publications; and

(7) The required petition fee under 37 CFR 1.17(h).

The request to participate in the PPH pilot program and petition fail to include:

(3) all claims in the U.S. application must sufficiently correspond or be amended to sufficiently correspond to the allowable/patentable claim(s) in the JPO application(s);

The claims of the U.S. application have been amended so as to no longer sufficiently correspond to the allowable/patentable claims in the JPO application. Specifically, the U.S. claim include limitations (e.g., "an output shaft unit" and "the output shaft unit including at least one output shaft by which at least one of the drive gears is rotatably supported") not included during examination of the JPO claims. All claims in the U.S. application must sufficiently correspond or be amended to sufficiently correspond to the allowable/patentable claims in the JPO application, with "sufficiently correspond" being defined as "not materially changed". The additional recitation of the output shaft unit materially changes the U.S. claims.

Applicant is given a time period of **ONE MONTH or THIRTY DAYS**, whichever is longer, to correct the deficiencies. **NO EXTENSION OF TIME UNDER 37 CFR 1.136 IS PERMITTED.** If the deficiencies are not corrected with the time period given, the application will await action in its regular turn.

Response must submitted by EFS-Web using the document description "Petition to make special under Pat Pros Hwy". Telephone inquires concerning this decision should be directed to Teri P. Luu at 571-272-7045. All other inquiries concerning the examination or status of the application should be directed to the Patent Application Information Retrieval (PAIR) system.

Teri P. Luu
Quality Assurance Specialist
Technology Center 3600

tpl: 3/24/09

UNITED STATES PATENT AND TRADEMARK OFFICE

UNITED STATES DEPARTMENT OF COMMERCE
United States Patent and Trademark Office
Address: COMMISSIONER FOR PATENTS
P.O. Box 1450
Alexandria, Virginia 22313-1450
www.uspto.gov

APPLICATION NO.	FILING DATE	FIRST NAMED INVENTOR	ATTORNEY DOCKET NO.	CONFIRMATION NO.
12/054,869	03/25/2008	Shingo NAGANO	324325US2	6841

7590 01/12/2010
OBLON, SPIVAK, MCCLELLAND MAIER & NEUSTADT, L.L.P.
1940 DUKE STREET
ALEXANDRIA, VA 22314

EXAMINER
CHEN, WEN YING PATTY

ART UNIT	PAPER NUMBER
2871	

NOTIFICATION DATE	DELIVERY MODE
01/12/2010	ELECTRONIC

DECISION GRANTING PETITION UNDER 37 CFR 1.138(d)

The declaration of express abandonment is recognized

This is in response to the petition under 37 CFR 1.138(d), requesting for a refund of any previously paid search fee and excess claims fee in the above-identified application.

The petition is granted.

The express abandonment is recognized. Any previously paid search fee and excess claims fee are hereby refunded.

Telephone inquiries should be directed to the Office of Data Management at (571) 272-4200.

Patent Publication Branch
Office of Data Management

Refund Refs
01/11/2010 [illegible]

Credit Card Refund Total: $510.00

Adjustment date: 01/11/2010 NFARMER
03/26/2008 INTEFSW 00001054 12054869
02 FC:1111
-510.00 OP

FORM PET651G (Rev. 08/07)

UNITED STATES PATENT AND TRADEMARK OFFICE

Commissioner for Patents
United States Patent and Trademark Office
P.O. Box 1450
Alexandria, VA 22313-1450
www.uspto.gov

MAILED

NOV 10 2009

OFFICE OF PETITIONS

J C PATENTS
4 VENTURE, SUITE 250
IRVINE, CA 92618

In re Application of	:	
Yung-Hsiang Cho	:	
Application No. 12/054,897	:	NOTICE
Filed: March 25, 2008	:	
Attorney Docket No. JCLA26148	:	

This is a notice regarding your request for acceptance of a fee deficiency submission under 37 CFR 1.28.

The Office no longer investigates or rejects original or reissue patent under 37 CFR 1.56. **1098 Off. Gaz. Pat. Office 502 (January 3, 1989)**. Therefore, nothing in this Notice is intended to imply that an investigation was done.

Your fee deficiency submission under 37 CFR 1.28 is hereby **ACCEPTED**.

This patent is no longer entitled to small entity status. Accordingly, all future fees paid in this patent must be paid at the large entity rate.

Inquiries related to this communication should be directed to the undersigned at (571) 272-6059.

A. Kelley

Alicia Kelley
Petitions Examiner
Office of Petitions

UNITED STATES PATENT AND TRADEMARK OFFICE

UNITED STATES DEPARTMENT OF COMMERCE
United States Patent and Trademark Office
Address: COMMISSIONER FOR PATENTS
P.O. Box 1450
Alexandria, Virginia 22313-1450
www.uspto.gov

APPLICATION NO.	FILING DATE	FIRST NAMED INVENTOR	ATTORNEY DOCKET NO.	CONFIRMATION NO.
12/054,899	03/25/2008	Jen-Chi Liu	250351-1020	6881

7590 05/21/2010
THOMAS, KAYDEN, HORSTEMEYER & RISLEY, LLP
600 GALLERIA PARKWAY, S.E.
STE 1500
ATLANTA, GA 30339-5994

EXAMINER
DUONG, OANH L

ART UNIT	PAPER NUMBER
2455	

MAIL DATE	DELIVERY MODE
05/21/2010	PAPER

DECISION GRANTING PETITION UNDER 37 CFR 1.138(d)

The declaration of express abandonment is recognized

This is in response to the petition under 37 CFR 1.138(d), requesting for a refund of any previously paid search fee and excess claims fee in the above-identified application.

The petition is granted.

The express abandonment is recognized. Any previously paid search fee and excess claims fee are hereby refunded.

Telephone inquiries should be directed to the Office of Data Management at (571) 272-4200.

Betty Powell

Patent Publication Branch
Office of Data Management

UNITED STATES PATENT AND TRADEMARK OFFICE

Commissioner for Patents
United States Patent and Trademark Office
P.O. Box 1450
Alexandria, VA 22313-1450
www.uspto.gov

DICKINSON WRIGHT, PLLC
1875 EYE STREET, NW
SUITE 1200
WASHINGTON DC 20006

MAILED

JUN 24 2010

OFFICE OF PETITIONS

In re Application of	:	
Joachim Klink	:	DECISION ON PETITION
Application No. 12/054,958	:	TO WITHDRAW
Filed: March 25, 2008	:	FROM RECORD
Attorney Docket No. 039090-00027	:	

This is a decision on the Request to Withdraw as attorney or agent of record under 37 C.F.R. § 1.36(b), filed May 27, 2010.

The request is **APPROVED**.

A grantable request to withdraw as attorney/agent of record must be signed by every attorney/agent seeking to withdraw or contain a clear indication that one attorney is signing on behalf of another/others. The Office will require the practitioner(s) to certify that he, she or they have: (1) given reasonable notice to the client, prior to the expiration of the reply period, which the practitioner(s) intends to withdraw from employment; (2) delivered to the client or a duly authorized representative of the client all papers and property (including funds) to which the client is entitled; and (3) notified the client of any replies that may be due and the time frame within which the client must respond, pursuant to 37 CFR 10.40 (c).

The request was signed by Kevin R. Spivak on behalf of all attorneys of record who are associated with Customer No. 87133.

All attorneys/agents associated with Customer Number 87133 have been withdrawn. Applicant is reminded that there is no attorney of record at this time.

All future correspondence will be directed to the assignee at the address indicated below.

Currently, there is an outstanding Office action mailed December 31, 2009 that requires a reply.

Telephone inquires concerning this decision should be directed to the undersigned at (571) 272-7751. All other inquires concerning either the examination or status of the application should be directed to the Technology Center.

Joan Olszewski

Joan Olszewski
Petitions Examiner
Office of Petitions

cc: Nokia Siemens Networks GmbH & Co. KG
CTO RTP IPR/Patent Administration
Munich, Germany 80240

UNITED STATES PATENT AND TRADEMARK OFFICE

Commissioner for Patents
United States Patent and Trademark Office
P.O. Box 1450
Alexandria, VA 22313-1450
www.uspto.gov

FROST BROWN TODD, LLC
2200 PNC CENTER
201 E. FIFTH STREET
CINCINNATI OH 45202

COPY MAILED
DEC 18 2008

In re Application of	:	
Simon Boocock	:	
Application No. 12/054,985	:	DECISION ON PETITION
Filed: March 25, 2008	:	
Attorney Docket No. 0080301/0547124	:	

This is a decision on the petition under the unintentional provisions of 37 CFR 1.137(b), filed November 26, 2008, to revive the above-identified application.

The petition is **GRANTED**.

The application became abandoned for failure to reply in a timely manner to the Notice to File Missing Parts (Notice), mailed April 11, 2008 and the Notice of Incomplete Reply, mailed August 18, 2008. The April 11, 2008 Notice set a period for reply of two (2) months from the mail date of the Notice, that continued to run with the mailing of the August 18, 2008 Notice. No extensions of time under the provisions of 37 CFR 1.136(a) were obtained. Accordingly, the application became abandoned on June 12, 2008.

The petition satisfies the requirements of 37 CFR 1.137(b) in that petitioner has supplied (1) the reply in the form of 3 pages of corrected drawings (Figs 1-3), (2) the petition fee of $1640, and (3) a proper statement of unintentional delay.

Telephone inquiries concerning this decision should be directed to Denise Williams at (571) 272-8930.

This application is being referred to the Office of Patent Application Processing for further processing in accordance with this decision on petition.

Brian W. Brown
Petitions Examiner
Office of Petitions

UNITED STATES PATENT AND TRADEMARK OFFICE

UNITED STATES DEPARTMENT OF COMMERCE
United States Patent and Trademark Office
Address: COMMISSIONER FOR PATENTS
P.O. Box 1450
Alexandria, Virginia 22313-1450
www.uspto.gov

APPLICATION NO.	FILING DATE	FIRST NAMED INVENTOR	ATTORNEY DOCKET NO.	CONFIRMATION NO.
12/055,089	03/25/2008	Hidehito KOTANI	324113US0 DIV	7209

7590 09/04/2008
OBLON, SPIVAK, MCCLELLAND MAIER & NEUSTADT, P.C.
1940 DUKE STREET
ALEXANDRIA, VA 22314

EXAMINER
SHAW, AMANDA MARIE

ART UNIT	PAPER NUMBER
1634	

NOTIFICATION DATE	DELIVERY MODE
09/04/2008	ELECTRONIC

DECISION GRANTING PETITION UNDER 37 CFR 1.138(d)

The declaration of express abandonment is recognized

This is in response to the petition under 37 CFR 1.138(d), requesting for a refund of any previously paid search fee and excess claims fee in the above-identified application.

The petition is granted.

The express abandonment is recognized. Any previously paid search fee and excess claims fee are hereby refunded.

Telephone inquiries should be directed to the Office of Data Management at (571) 272-4200.

Nicole Farmer

Patent Publication Branch
Office of Data Management

Refund Ref:
09/03/2008 0030060625

Credit Card Refund Total: $510.00

Am Exp..: XXXXXXXXXXX1000

Adjustment date: 09/03/2008 NFARMER
03/26/2008 INTEFSW 00002850 12055089
02 FC:1111 -510.00 OP

FORM PET651G (Rev. 08/07)

UNITED STATES PATENT AND TRADEMARK OFFICE

Commissioner for Patents
United States Patent and Trademark Office
P.O. Box 1450
Alexandria, VA 22313-1450
www.uspto.gov

ZILKA-KOTAB, PC- MRM1
P.O. BOX 721120
SAN JOSE, CA 95172-1120

MAILED

MAR 3 1 2009

OFFICE OF PETITIONS

In re Application of	:	
Suresh N. Rajan	:	
Application No. 12/055,107	:	DECISION DISMISSING PETITION
Filed: March 25, 2008	:	UNDER 37 CFR 1.313(a)
Docket No. MRM1P034A	:	

This is a decision on the petition under 37 CFR 1.313(a), filed March 30, 2009, requesting that the above-identified application be withdrawn from issue. A Request for Continued Examination (RCE) and an Information Disclosure Statement (IDS) accompanied the present petition.

The petition is dismissed as moot.

Since the RCE was filed within the period set for paying the issue fee, as required by the Notice of Allowance and Issue Fee Due mailed January 27, 2009, prosecution is reopened in the present application. Consequently, a petition under 37 CFR 1.313 is not necessary.

Telephone inquiries relating to this decision should be directed to the undersigned at (571) 272-3204.

This application is being referred to Technology Center AU 2827 for processing of the RCE and for appropriate action by the Examiner in the normal course of business on the concurrently filed IDS in accordance with 37 CFR 1.114.

/SDB/

Sherry D. Brinkley
Petitions Examiner
Office of Petitions

UNITED STATES PATENT AND TRADEMARK OFFICE

Commissioner for Patents
United States Patent and Trademark Office
P.O. Box 1450
Alexandria, VA 22313-1450
www.uspto.gov

MAILED

MAY 13 2010

OFFICE OF PETITIONS

CANON U.S.A. INC. INTELLECTUAL PROPERTY DIVISION
15975 ALTON PARKWAY
IRVINE, CA 92618-3731

In re Application of	:	
Masashi Yoshida, et al.	:	
Application No. 12/055,126	:	DECISION GRANTING PETITION
Filed: March 25, 2008	:	UNDER 37 CFR 1.313(c)(2)
Attorney Docket No. 10051890US01	:	

This is a decision on the petition under 37 CFR 1.313(c)(2), filed May 11, 2010, to withdraw the above-identified application from issue after payment of the issue fee.

The petition is **GRANTED**.

The above-identified application is withdrawn from issue for consideration of a submission under 37 CFR 1.114 (request for continued examination). *See* 37 CFR 1.313(c)(2).

Petitioner is advised that the issue fee paid on April 20, 2010 cannot be refunded. If, however, this application is again allowed, petitioner may request that it be applied towards the issue fee required by the new Notice of Allowance.[1]

Telephone inquiries regarding this decision should be directed to undersigned at (571) 272-1642. All other inquiries regarding the examination or status of this application should be directed to the Technology Center.

This application is being referred to Technology Center AU 2454 for processing of the request for continued examination under 37 CFR 1.114 and for consideration of the concurrently filed information disclosure statement.

/AMW/
April M. Wise
Petitions Examiner
Office of Petitions

---

[1] *The request to apply the issue fee to the new Notice may be satisfied by completing and returning the new Part B – Fee(s) Transmittal Form (along with any balance due at the time of submission). Petitioner is advised that the Issue Fee Transmittal Form* ***must*** *be completed and timely submitted to avoid abandonment of the application.*

UNITED STATES PATENT AND TRADEMARK OFFICE

Commissioner for Patents
United States Patent and Trademark Office
P.O. Box 1450
Alexandria, VA 22313-1450
www.uspto.gov

SUGHRUE MION, PLLC
2100 PENNSYLVANIA AVENUE, N.W.
SUITE 800
WASHINGTON DC 20037

COPY MAILED

OCT 2 6 2009

OFFICE OF PETITIONS

In re Application of	:
Ishikura et al.	:
Application No. 12/055,132	: DECISION ON PETITION
Filed: March 25, 2008	: UNDER 37 CFR 1.78(a)(6)
Attorney Docket No. Q106865	:
	:

This is a decision on the petition under 37 CFR 1.78(a)(3), filed July 8, 2009, to accept an unintentionally delayed claim under 35 U.S.C. § 119(e) for the benefit of prior-filed nonprovisional application.

The petition is **DISMISSED**.

A petition under 37 CFR 1.78(a)(6) is only applicable to those applications filed on or after November 29, 2000. Further, the petition is appropriate only after expiration of the period specified in 37 CFR 1.78(a)(5)(ii) and must be filed during the pendency of the nonprovisional application. In addition, the petition must be accompanied by:

(1) the reference required by 35 U.S.C. § 119(e) and 37 CFR 1.78(a)(5)(i) to the prior-filed application, unless previously submitted;
(2) the surcharge set forth in § 1.17(t); and
(3) a statement that the entire delay between the date the claim was due under 37 CFR 1.78(a)(5)(ii) and the date the claim was filed was unintentional. The Commissioner may require additional information where there is a question whether the delay was unintentional.

The instant petition does not comply with item (1) above.

The amendment is not acceptable as drafted since it improperly incorporates by reference the prior-filed application. Petitioner's attention is directed to Dart Industries v. Banner, 636 F.2d 684, 207 USPQ 273 (C.A.D.C. 1980), where the court drew a distinction between a permissible 35 U.S.C. § 120 statement and the impermissible introduction of new matter by way of incorporation by reference in a 35 U.S.C. § 120 statement. The court specifically stated:

> Section 120 merely provides a mechanism whereby an application becomes entitled to benefit of the filing date of an earlier application disclosing the same subject matter. Common subject matter must be disclosed, in both applications, either specifically or by an express incorporation-by-reference of prior disclosed subject matter. Nothing in section 120 itself operates to carry forward any disclosure from an earlier application. In re deSeversky, supra at 674, 177 USPQ at 146-147. Section 120 contains no magical disclosure-augmenting

> powers able to pierce new matter barriers. It cannot, therefore, "limit" the absolute and express prohibition against new matter contained in section 251.

In order for the incorporation by reference statement to be effective as a proper safeguard against the omission of a portion of a prior application, the incorporation by reference statement must be included in the specification-as-filed, or in an amendment specifically referred to in an oath or declaration executing the application. *See* In re deSeversky, *supra*. *Note also* MPEP 201.06(c).

Accordingly, since the proposed nonprovisional application was not in the original specification, the incorporation by reference statement cannot be used in reference to the application.

Further, petitioner is advised that, where an application claims a benefit under 35 U.S.C. 120 of a chain of applications, the application must make a reference to the first (earliest) application and every intermediate application. *See* Sampson v. Ampex Corp., 463 F.2d 1042, 1044-45, 174 USPQ 417, 418-19 (2d Cir. 1972); Sticker Indus. Supply Corp. v. Blaw-Knox Co., 405 F.2d 90, 93, 160 USPQ 177, 179 (7th Cir. 1968); Hovlid v Asari, 305 F.2d 747, 751, 134 USPQ 162, 165 (9th Cir. 1962). See also MPEP § 201.11. In addition, every intermediate application must also make a reference to the first (earliest) application and every application after the first application and before such intermediate application. MPEP Section 201.06(d). In this regard, petitioner has requested benefit of Application No. 10/379,351. However, the intermediate application, 11/683,247 is a divisional of Application No. 10/378,531.

Accordingly, before the petition under 37 CFR 1.78(a)(6) can be granted, a substitute amendment[1] deleting the incorporation by reference statement and correcting the above matter, along with a renewed petition under 37 CFR 1.78(a)(6), is required.

Further correspondence with respect to this matter should be addressed as follows:

By mail:	Mail Stop PETITIONS Commissioner for Patents Post Office Box 1450 Alexandria, VA 22313-1450
By hand:	Customer Window located at: U.S. Patent and Trademark Office Customer Service Window Randolph Building 401 Dulany Street Alexandria, VA 22314
By fax:	(571) 273-8300 ATTN: Office of Petitions

Any questions concerning this matter may be directed to Joan Olszewski at (571) 272-7751.

/Liana Walsh/
Liana Walsh
Petitions Examiner
Office of Petitions

---

[1] *Note* 37 CFR 1.121

UNITED STATES PATENT AND TRADEMARK OFFICE

Commissioner for Patents
United States Patent and Trademark Office
P.O. Box 1450
Alexandria, VA 22313-1450
www.uspto.gov

SUGHRUE MION, PLLC
2100 PENNSYLVANIA AVENUE, N.W.
SUITE 800
WASHINGTON DC 20037

COPY MAILED

OCT 30 2009

OFFICE OF PETITIONS

In re Application of	:	
Ishikura et al.	:	
Application No. 12/055,132	:	DECISION ON PETITION
Filed: March 25, 2008	:	UNDER 37 CFR 1.78(a)(6)
Attorney Docket No. Q106865	:	
	:	

CORRECTED DECISION

This is a decision on the petition under 37 CFR 1.78(a)(3), filed July 8, 2009, to accept an unintentionally delayed claim under 35 U.S.C. § 120 for the benefit of prior-filed nonprovisional application.

The petition is **DISMISSED**.

A petition under 37 CFR 1.78(a)(3) is only applicable to those applications filed on or after November 29, 2000. Further, the petition is appropriate only after expiration of the period specified in 37 CFR 1.78(a)(2)(ii) and must be filed during the pendency of the nonprovisional application. In addition, the petition must be accompanied by:

(1) the reference required by 35 U.S.C. § 120 and 37 CFR 1.78(a)(2)(i) to the prior-filed application, unless previously submitted;
(2) the surcharge set forth in § 1.17(t); and
(3) a statement that the entire delay between the date the claim was due under 37 CFR 1.78(a)(2)(ii) and the date the claim was filed was unintentional. The Commissioner may require additional information where there is a question whether the delay was unintentional.

The instant petition does not comply with item (1) above.

The amendment is not acceptable as drafted since it improperly incorporates by reference the prior-filed application. Petitioner's attention is directed to Dart Industries v. Banner, 636 F.2d 684, 207 USPQ 273 (C.A.D.C. 1980), where the court drew a distinction between a permissible 35 U.S.C. § 120 statement and the impermissible introduction of new matter by way of incorporation by reference in a 35 U.S.C. § 120 statement. The court specifically stated:

> Section 120 merely provides a mechanism whereby an application becomes entitled to benefit of the filing date of an earlier application disclosing the same subject matter. Common subject matter must be disclosed, in both applications, either specifically or by an express incorporation-by-reference of prior disclosed subject matter. Nothing in section 120 itself operates to carry forward any disclosure from an earlier application. In re deSeversky, supra at 674, 177 USPQ at 146-147. Section 120 contains no magical disclosure-augmenting powers able to pierce new matter barriers. It cannot, therefore, "limit" the absolute and express prohibition against new matter contained in section 251.

In order for the incorporation by reference statement to be effective as a proper safeguard against the omission of a portion of a prior application, the incorporation by reference statement must be included in the specification-as-filed, or in an amendment specifically referred to in an oath or declaration executing the application. *See* In re deSeversky, *supra*. *Note also* MPEP 201.06(c).

Accordingly, since the proposed nonprovisional application was not in the original specification, the incorporation by reference statement cannot be used in reference to the application.

Further, petitioner is advised that, where an application claims a benefit under 35 U.S.C. 120 of a chain of applications, the application must make a reference to the first (earliest) application and every intermediate application. *See* Sampson v. Ampex Corp., 463 F.2d 1042, 1044-45, 174 USPQ 417, 418-19 (2d Cir. 1972); Sticker Indus. Supply Corp. v. Blaw-Knox Co., 405 F.2d 90, 93, 160 USPQ 177, 179 (7th Cir. 1968); Hovlid v Asari, 305 F.2d 747, 751, 134 USPQ 162, 165 (9th Cir. 1962). See also MPEP § 201.11. In addition, every intermediate application must also make a reference to the first (earliest) application and every application after the first application and before such intermediate application. MPEP Section 201.06(d). In this regard, petitioner has requested benefit of Application No. 10/379,351. However, the intermediate application, 11/683,247 is a divisional of Application No. 10/378,531.

Accordingly, before the petition under 37 CFR 1.78(a)(3) can be granted, a substitute amendment[1] deleting the incorporation by reference statement and correcting the above matter, along with a renewed petition under 37 CFR 1.78(a)(3), is required.

Further correspondence with respect to this matter should be addressed as follows:

By mail:	Mail Stop PETITIONS Commissioner for Patents Post Office Box 1450 Alexandria, VA 22313-1450
By hand:	Customer Window located at: U.S. Patent and Trademark Office Customer Service Window Randolph Building 401 Dulany Street Alexandria, VA 22314
By fax:	(571) 273-8300 ATTN: Office of Petitions

Any questions concerning this matter may be directed to Joan Olszewski at (571) 272-7751.

/Liana Walsh/
Liana Walsh
Petitions Examiner
Office of Petitions

[1] *Note* 37 CFR 1.121

UNITED STATES PATENT AND TRADEMARK OFFICE

Commissioner for Patents
United States Patent and Trademark Office
P.O. Box 1450
Alexandria, VA 22313-1450
www.uspto.gov

SUGHRUE MION, PLLC
2100 PENNSYLVANIA AVENUE, N.W.
SUITE 800
WASHINGTON DC 20037

COPY MAILED

JAN 15 2010

In re Application of	:
Ishikura et al.	:
Application No. 12/055,132	: DECISION GRANTING PETITION
Filed: March 25, 2008	: UNDER 37 CFR 1.78(a)(3)
Attorney Docket No. Q106865	:

This is a decision on the renewed petition under 37 CFR 1.78(a)(3), filed November 25, 2009, to accept an unintentionally delayed claim under 35 U.S.C. § 120 for the benefit of priority to the prior-filed nonprovisional application set forth in the amendment filed concurrently with the instant petition.

The petition is **GRANTED**.

A petition for acceptance of a claim for late priority under 37 CFR 1.78(a)(3) is only applicable to those applications filed on or after November 29, 2000. Further, the petition is appropriate only after the expiration of the period specified in 37 CFR 1.78(a)(2)(ii). In addition, the petition under 37 CFR 1.78(a)(3) must be accompanied by:

(1) the reference required by 35 U.S.C. § 120 and 37 CFR 1.78(a)(2)(i) of the prior-filed application, unless previously submitted;
(2) the surcharge set forth in § 1.17(t); and
(3) a statement that the entire delay between the date the claim was due under 37 CFR 1.78(a)(2)(ii) and the date the claim was filed was unintentional. The Commissioner may require additional information where there is a question whether the delay was unintentional.

The instant nonprovisional application was filed after November 29, 2000, and the claim herein for the benefit of priority to the prior-filed nonprovisional application is submitted after expiration of the period specified by 37 CFR 1.78(a)(2)(ii). Therefore, this is a proper petition under 37 CFR 1.78(a)(3).

The petition complies with the requirements for a grantable petition under 37 CFR 1.78(a)(3) in that (1) a reference to the prior-filed nonprovisional application has been included in an amendment to the first sentence of the specification following the title, as provided by 37 CFR 1.78(a)(2)(iii); (2) the surcharge fee required by 37 CFR 1.17(t) has been submitted; and (3) the petition contains a proper statement of unintentional delay.

Accordingly, having found that the instant petition for acceptance of an unintentionally delayed claim for the benefit of priority under 35 U.S.C. § 120 to the prior-filed nonprovisional application satisfies the conditions of 37 CFR 1.78(a)(3), the petition is granted.

The granting of the petition to accept the delayed benefit claim to the prior-filed application under 37 CFR 1.78(a)(3) should not be construed as meaning that the instant application is entitled to the benefit of the prior-filed application. In order for the instant application to be entitled to the benefit of the prior-filed application, all other requirements under 35 U.S.C. § 120 and 37 CFR 1.78(a)(1) and (a)(2) must be met. Similarly, the fact that the corrected Filing Receipt accompanying this decision on petition includes the prior-filed application should not be construed as meaning that applicant is entitled to the claim for benefit of priority to the prior-filed application noted thereon. Accordingly, the examiner will, in due course, consider this benefit claim and determine whether the instant application is entitled to the benefit of the earlier filing date.

A corrected Filing Receipt, which includes the priority claim to the prior-filed nonprovisional application, accompanies this decision on petition.

Additionally, petitioner has submitted an unnecessary duplicate petition fee of $1,410.00. This fee will be refunded to petitioner's deposit account in due course.

Any inquiries concerning this decision may be directed to Joan Olszewski at (571) 272-7751.

This matter is being referred to Technology Center Art Unit 2624 for appropriate action on the amendment filed November 25, 2009, including consideration by the examiner of applicant's entitlement to claim benefit of priority under 35 U.S.C. § 120 to the prior-filed nonprovisional application.

/Liana Walsh/
Liana Walsh
Petitions Examiner
Office of Petitions

ATTACHMENT: Corrected Filing Receipt

UNITED STATES PATENT AND TRADEMARK OFFICE

UNITED STATES DEPARTMENT OF COMMERCE
United States Patent and Trademark Office
Address: COMMISSIONER FOR PATENTS
P.O. Box 1450
Alexandria, Virginia 22313-1450
www.uspto.gov

APPLICATION NUMBER	FILING or 371(c) DATE	GRP ART UNIT	FIL FEE REC'D	ATTY.DOCKET.NO	TOT CLAIMS	IND CLAIMS
12/055,132	03/25/2008	2624	1030	Q106865	5	1

CONFIRMATION NO. 7280

CORRECTED FILING RECEIPT

23373
SUGHRUE MION, PLLC
2100 PENNSYLVANIA AVENUE, N.W.
SUITE 800
WASHINGTON, DC 20037

OC000000039670480

Date Mailed: 01/15/2010

Receipt is acknowledged of this non-provisional patent application. The application will be taken up for examination in due course. Applicant will be notified as to the results of the examination. Any correspondence concerning the application must include the following identification information: the U.S. APPLICATION NUMBER, FILING DATE, NAME OF APPLICANT, and TITLE OF INVENTION. Fees transmitted by check or draft are subject to collection. Please verify the accuracy of the data presented on this receipt. **If an error is noted on this Filing Receipt, please submit a written request for a Filing Receipt Correction. Please provide a copy of this Filing Receipt with the changes noted thereon. If you received a "Notice to File Missing Parts" for this application, please submit any corrections to this Filing Receipt with your reply to the Notice. When the USPTO processes the reply to the Notice, the USPTO will generate another Filing Receipt incorporating the requested corrections**

Applicant(s)

Hisashi Ishikura, Tokyo, JAPAN;
Yoshiyuki Fujii, Tokyo, JAPAN;
Takayuki Yamamoto, Tokyo, JAPAN;
Hideki Tsukaoka, Tokyo, JAPAN;

Assignment For Published Patent Application

MITSUBISHI DENKI KABUSHIKI KAISHA, Tokyo, JAPAN

Power of Attorney: The patent practitioners associated with Customer Number 23373

Domestic Priority data as claimed by applicant

This application is a DIV of 11/683,247 03/07/2007 ABN
which is a DIV of 10/379,531 03/06/2003 ABN

Foreign Applications

JAPAN 2002-283589 09/27/2002

Request to Retrieve - This application either claims priority to one or more applications filed in an intellectual property Office that participates in the Priority Document Exchange (PDX) program or contains a proper **Request to Retrieve Electronic Priority Application(s)** (PTO/SB/38 or its equivalent). Consequently, the USPTO will attempt to electronically retrieve these priority documents.

If Required, Foreign Filing License Granted: 04/15/2008

The country code and number of your priority application, to be used for filing abroad under the Paris Convention, is **US 12/055,132**

Projected Publication Date: Not Applicable

Non-Publication Request: No

Early Publication Request: No
Title

VEHICLE-ONBOARD DRIVING LANE RECOGNIZING APPARATUS

Preliminary Class

382

PROTECTING YOUR INVENTION OUTSIDE THE UNITED STATES

Since the rights granted by a U.S. patent extend only throughout the territory of the United States and have no effect in a foreign country, an inventor who wishes patent protection in another country must apply for a patent in a specific country or in regional patent offices. Applicants may wish to consider the filing of an international application under the Patent Cooperation Treaty (PCT). An international (PCT) application generally has the same effect as a regular national patent application in each PCT-member country. The PCT process **simplifies** the filing of patent applications on the same invention in member countries, but **does not result** in a grant of "an international patent" and does not eliminate the need of applicants to file additional documents and fees in countries where patent protection is desired.

Almost every country has its own patent law, and a person desiring a patent in a particular country must make an application for patent in that country in accordance with its particular laws. Since the laws of many countries differ in various respects from the patent law of the United States, applicants are advised to seek guidance from specific foreign countries to ensure that patent rights are not lost prematurely.

Applicants also are advised that in the case of inventions made in the United States, the Director of the USPTO must issue a license before applicants can apply for a patent in a foreign country. The filing of a U.S. patent application serves as a request for a foreign filing license. The application's filing receipt contains further information and guidance as to the status of applicant's license for foreign filing.

Applicants may wish to consult the USPTO booklet, "General Information Concerning Patents" (specifically, the section entitled "Treaties and Foreign Patents") for more information on timeframes and deadlines for filing foreign patent applications. The guide is available either by contacting the USPTO Contact Center at 800-786-9199, or it can be viewed on the USPTO website at http://www.uspto.gov/web/offices/pac/doc/general/index.html.

For information on preventing theft of your intellectual property (patents, trademarks and copyrights), you may wish to consult the U.S. Government website, http://www.stopfakes.gov. Part of a Department of Commerce initiative, this website includes self-help "toolkits" giving innovators guidance on how to protect intellectual property in specific countries such as China, Korea and Mexico. For questions regarding patent enforcement issues, applicants may call the U.S. Government hotline at 1-866-999-HALT (1-866-999-4158).

LICENSE FOR FOREIGN FILING UNDER

Title 35, United States Code, Section 184

Title 37, Code of Federal Regulations, 5.11 & 5.15

GRANTED

The applicant has been granted a license under 35 U.S.C. 184, if the phrase "IF REQUIRED, FOREIGN FILING LICENSE GRANTED" followed by a date appears on this form. Such licenses are issued in all applications where the conditions for issuance of a license have been met, regardless of whether or not a license may be required as set forth in 37 CFR 5.15. The scope and limitations of this license are set forth in 37 CFR 5.15(a) unless an earlier license has been issued under 37 CFR 5.15(b). The license is subject to revocation upon written notification. The date indicated is the effective date of the license, unless an earlier license of similar scope has been granted under 37 CFR 5.13 or 5.14.

This license is to be retained by the licensee and may be used at any time on or after the effective date thereof unless it is revoked. This license is automatically transferred to any related applications(s) filed under 37 CFR 1.53(d). This license is not retroactive.

The grant of a license does not in any way lessen the responsibility of a licensee for the security of the subject matter as imposed by any Government contract or the provisions of existing laws relating to espionage and the national security or the export of technical data. Licensees should apprise themselves of current regulations especially with respect to certain countries, of other agencies, particularly the Office of Defense Trade Controls, Department of State (with respect to Arms, Munitions and Implements of War (22 CFR 121-128)); the Bureau of Industry and Security, Department of Commerce (15 CFR parts 730-774); the Office of Foreign AssetsControl, Department of Treasury (31 CFR Parts 500+) and the Department of Energy.

NOT GRANTED

No license under 35 U.S.C. 184 has been granted at this time, if the phrase "IF REQUIRED, FOREIGN FILING LICENSE GRANTED" DOES NOT appear on this form. Applicant may still petition for a license under 37 CFR 5.12, if a license is desired before the expiration of 6 months from the filing date of the application. If 6 months has lapsed from the filing date of this application and the licensee has not received any indication of a secrecy order under 35 U.S.C. 181, the licensee may foreign file the application pursuant to 37 CFR 5.15(b).

UNITED STATES PATENT AND TRADEMARK OFFICE

Commissioner for Patents
United States Patent and Trademark Office
P.O. Box 1450
Alexandria, VA 22313-1450
www.uspto.gov

IBM CORP (IBM AUSTIN IPLAW)
C/O D"AMBROSIO & MENON, L.LP.
10260 WESTHEIMER ROAD, SUITE 465
HOUSTON TX 77042

MAILED

MAY 06 2010

OFFICE OF PETITIONS

In re Application of
Jos Manuel Accapadi et al.
Application No. 12/055,179
Filed: March 25, 2008
Attorney Docket No: AUS920040108US2

ON PETITION

This is a decision on the petition filed March 11, 2010 under 37 CFR 1.137(b),[1] to revive the above-identified application.

The petition is **GRANTED**.

This application became abandoned for failure to timely reply to the non-Final Office Action mailed March 12, 2009. A shortened statutory period of three months was set for replying to the non-Final Office Action. No response having been timely filed, this application became abandoned June 15, 2009. Accordingly, a Notice of Abandonment was mailed January 21, 2010.

This matter is being referred to Technology Center 2195 for appropriate action on the amendment filed March 11, 2010.

Telephone inquiries concerning this matter should be directed to the undersigned Petitions Attorney at (571) 272-3212.

Patricia Faison-Ball

Patricia Faison-Ball
Senior Petitions Attorney
Office of Petitions

---

[1]Effective December 1, 1997, the provisions of 37 CFR 1.137(b) now provide that where the delay in reply was unintentional, a petition may be filed to revive an abandoned application or a lapsed patent pursuant to 37 CFR 1.137(b). A grantable petition filed under the provisions of 37 CFR 1.137(b) must be accompanied by:

(1) the required reply, unless previously filed. In a nonprovisional application abandoned for failure to prosecute, the required reply may be met by the filing of a continuing application. In a nonprovisional application filed on or after June 8, 1995, and abandoned for failure to prosecute, the required reply may also be met by the filing of a request for continued examination in compliance with § 1.114. In an application or patent, abandoned or lapsed for failure to pay the issue fee or any portion thereof, the required reply must be the payment of the issue fee or any outstanding balance thereof. In an application abandoned for failure to pay the publication fee, the required reply must include payment of the publication fee.

(2) the petition fee as set forth in 37 CFR 1.17(m);

(3) a statement that the entire delay in filing the required reply from the due date for the reply until the filing of a grantable petition pursuant to 37 CFR 1.137(b) was unintentional. The Commissioner may required additional information where there is a question whether the delay was unintentional; and

(4) any terminal disclaimer (and fee as set forth in 37 CFR 1.20(d)) required pursuant to 37 CFR 1.137(c)).

UNITED STATES PATENT AND TRADEMARK OFFICE

Commissioner for Patents
United States Patent and Trademark Office
P.O. Box 1450
Alexandria, VA 22313-1450
www.uspto.gov

COPY MAILED

OCT 01 2009

OFFICE OF PETITIONS

QUICKPATENTS, INC.
32861 CALLE PERFECTO
SUITE A
SAN JUAN CAPISTRANO CA 92675

In re Application of	:	
CHURCHILL, Robert L. et al.	:	
Application No. 12/055,180	:	DECISION ON PETITION
Filed: March 25, 2008	:	TO WITHDRAW
Attorney Docket No. **DC71121**	:	FROM RECORD

This is a decision on the Request to Withdraw as attorney or agent of record under 37 C.F.R. § 1.36(b), filed September 14, 2009.

The request is **APPROVED**.

A grantable request to withdraw as attorney/agent of record must be signed by every attorney/agent seeking to withdraw or contain a clear indication that one attorney is signing on behalf of another/others. The Office requires the practitioner(s) requesting withdrawal to certify that he, she, or they have: (1) given reasonable notice to the client, prior to the expiration of the response period, that the practitioner(s) intends to withdraw from employment; (2) delivered to the client or a duly authorized representative of the client all papers and property (including funds) to which the client is entitled; and (3) notified the client of any responses that may be due and the time frame within which the client must respond, pursuant 37 CFR 10.40(c).

The request was signed by Kevin Prince on behalf of all attorneys of record who are associated with customer No. 56029. All attorneys/agents associated with the Customer Number 56029 have been withdrawn. Applicant is reminded that there is no attorney of record at this time.

All future correspondence will be directed to the first named inventor Robert Churchill at the address indicated below.

Telephone inquiries concerning this decision should be directed to Tredelle Jackson at 571-272-2783.

Tredelle D. Jackson
Paralegal Specialist
Office of Petitions

cc: **ROBERT L. CHURCHILL**
1432 STERLING RD.
REDLANDS CA 92373

UNITED STATES PATENT AND TRADEMARK OFFICE

Commissioner for Patents
United States Patent and Trademark Office
P.O. Box 1450
Alexandria, VA 22313-1450
www.uspto.gov

Todd S. Parkhurst, Esq.
Hughes Socol Piers Resnick
& Dym Ltd.
Suite 4000
70 West Madison Street
Chicago, IL 60602

COPY MAILED

JUL 07 2008

In re Application of	:	
Alex E. Kunzler	:	
Application No. 12/055,209	:	DECISION ON PETITION
Filed: March 25, 2008	:	TO MAKE SPECIAL UNDER
Attorney Docket No. 20063.200098	:	37 CFR 1.102(c)(1)
	:	

This is a decision on the petition under 37 CFR 1.102(c)(1), filed May 22, 2008, to make the above-identified application special based on applicant's age as set forth in M.P.E.P. § 708.02, Section IV.

The petition is **GRANTED**.

A grantable petition to make an application special under 37 CFR 1.102(c)(1) and MPEP § 708.02, Section IV: Applicant's Age must be accompanied by evidence showing that at least one of the applicants is 65 years of age, or more, such as a birth certificate or a statement by applicant. No fee is required

The instant petition includes a statement by applicants Vincent E. Bryan, Jr. and Alex E. Kunzler and photocopies of their driver's license. Accordingly, the above-identified application has been accorded "special" status.

Telephone inquiries concerning this decision should be directed to Kimberly Inabinet at 571-272-4618.

All other inquiries concerning either the examination or status of the application should be directed to the Technology Center.

Upon completion of the pre-examination processing by the Office of Patent Application Processing, this application will be referred to Technology Center Art Unit 2821 for action on the merits commensurate with this decision.

Kimberly Inabinet

Kimberly Inabinet
Petitions Examiner
Office of Petitions

UNITED STATES PATENT AND TRADEMARK OFFICE

Commissioner for Patents
United States Patent and Trademark Office
P.O. Box 1450
Alexandria, VA 22313-1450
www.uspto.gov

SUGHRUE MION, PLLC
2100 PENNSYLVANIA AVENUE, N.W.
SUITE 800
WASHINGTON DC 20037

COPY MAILED
AUG 2 9 2008

In re Application of :
Dunnigan, et al. :
Application No. 12/055,268 : ON PETITION
Filed: March 25, 2008 :
Attorney Docket No. CQ10385

This is a decision on the petition under 37 CFR 1.182, filed July 15, 2008, to change the name of the first joint inventor cited on this application in USPTO records.

The petition is **granted**.

The name of the first joint inventor for the above-cited application is changed to "Anthony Dunnigan." The name of the first name inventor is being changed pursuant to the declaration filed May 13, 2008; the supplemental Application Data Sheet was not considered because it was unsigned.

A corrected filing receipt is enclosed.

The application file is being directed to Office of Patent Application Processing for further review.

Telephone inquiries concerning this matter may be directed to the undersigned at (571) 272-3222.

Kenya A. McLaughlin
Petitions Attorney
Office of Petitions

Enclosure: Corrected Filing Receipt

UNITED STATES PATENT AND TRADEMARK OFFICE

UNITED STATES DEPARTMENT OF COMMERCE
United States Patent and Trademark Office
Address: COMMISSIONER FOR PATENTS
P.O. Box 1450
Alexandria, Virginia 22313-1450
www.uspto.gov

APPLICATION NUMBER	FILING or 371(c) DATE	GRP ART UNIT	FIL FEE REC'D	ATTY.DOCKET.NO	TOT CLAIMS	IND CLAIMS
12/055,268	03/25/2008	2623	1230	CQ10385	24	3

CONFIRMATION NO. 7492

CORRECTED FILING RECEIPT

23373
SUGHRUE MION, PLLC
2100 PENNSYLVANIA AVENUE, N.W.
SUITE 800
WASHINGTON, DC 20037

OC000000031831042

Date Mailed: 08/29/2008

Receipt is acknowledged of this non-provisional patent application. The application will be taken up for examination in due course. Applicant will be notified as to the results of the examination. Any correspondence concerning the application must include the following identification information: the U.S. APPLICATION NUMBER, FILING DATE, NAME OF APPLICANT, and TITLE OF INVENTION. Fees transmitted by check or draft are subject to collection. Please verify the accuracy of the data presented on this receipt. **If an error is noted on this Filing Receipt, please submit a written request for a Filing Receipt Correction. Please provide a copy of this Filing Receipt with the changes noted thereon. If you received a "Notice to File Missing Parts" for this application, please submit any corrections to this Filing Receipt with your reply to the Notice. When the USPTO processes the reply to the Notice, the USPTO will generate another Filing Receipt incorporating the requested corrections**

Applicant(s)

Anthony DUNNIGAN, Berkeley, CA;
John Doherty, San Francisco, CA;

Assignment For Published Patent Application

FUJI XEROX CO., LTD., Tokyo, JAPAN

Power of Attorney: The patent practitioners associated with Customer Number 23373

Domestic Priority data as claimed by applicant

Foreign Applications

Permission to Access - A proper **Authorization to Permit Access to Application by Participating Offices** (PTO/SB/39 or its equivalent) has been received by the USPTO.

If Required, Foreign Filing License Granted: 04/07/2008

The country code and number of your priority application, to be used for filing abroad under the Paris Convention, is **US 12/055,268**

Projected Publication Date: 10/01/2009

Non-Publication Request: No

Early Publication Request: No

Title

SYSTEM, METHOD AND COMPUTER PROGRAM PRODUCT FOR INTERACTING WITH UNALTERED MEDIA

Preliminary Class

725

PROTECTING YOUR INVENTION OUTSIDE THE UNITED STATES

Since the rights granted by a U.S. patent extend only throughout the territory of the United States and have no effect in a foreign country, an inventor who wishes patent protection in another country must apply for a patent in a specific country or in regional patent offices. Applicants may wish to consider the filing of an international application under the Patent Cooperation Treaty (PCT). An international (PCT) application generally has the same effect as a regular national patent application in each PCT-member country. The PCT process **simplifies** the filing of patent applications on the same invention in member countries, but **does not result** in a grant of "an international patent" and does not eliminate the need of applicants to file additional documents and fees in countries where patent protection is desired.

Almost every country has its own patent law, and a person desiring a patent in a particular country must make an application for patent in that country in accordance with its particular laws. Since the laws of many countries differ in various respects from the patent law of the United States, applicants are advised to seek guidance from specific foreign countries to ensure that patent rights are not lost prematurely.

Applicants also are advised that in the case of inventions made in the United States, the Director of the USPTO must issue a license before applicants can apply for a patent in a foreign country. The filing of a U.S. patent application serves as a request for a foreign filing license. The application's filing receipt contains further information and guidance as to the status of applicant's license for foreign filing.

Applicants may wish to consult the USPTO booklet, "General Information Concerning Patents" (specifically, the section entitled "Treaties and Foreign Patents") for more information on timeframes and deadlines for filing foreign patent applications. The guide is available either by contacting the USPTO Contact Center at 800-786-9199, or it can be viewed on the USPTO website at http://www.uspto.gov/web/offices/pac/doc/general/index.html.

For information on preventing theft of your intellectual property (patents, trademarks and copyrights), you may wish to consult the U.S. Government website, http://www.stopfakes.gov. Part of a Department of Commerce initiative, this website includes self-help "toolkits" giving innovators guidance on how to protect intellectual property in specific countries such as China, Korea and Mexico. For questions regarding patent enforcement issues, applicants may call the U.S. Government hotline at 1-866-999-HALT (1-866-999-4158).

LICENSE FOR FOREIGN FILING UNDER

Title 35, United States Code, Section 184

Title 37, Code of Federal Regulations, 5.11 & 5.15

GRANTED

The applicant has been granted a license under 35 U.S.C. 184, if the phrase "IF REQUIRED, FOREIGN FILING LICENSE GRANTED" followed by a date appears on this form. Such licenses are issued in all applications where

the conditions for issuance of a license have been met, regardless of whether or not a license may be required as set forth in 37 CFR 5.15. The scope and limitations of this license are set forth in 37 CFR 5.15(a) unless an earlier license has been issued under 37 CFR 5.15(b). The license is subject to revocation upon written notification. The date indicated is the effective date of the license, unless an earlier license of similar scope has been granted under 37 CFR 5.13 or 5.14.

This license is to be retained by the licensee and may be used at any time on or after the effective date thereof unless it is revoked. This license is automatically transferred to any related applications(s) filed under 37 CFR 1.53(d). This license is not retroactive.

The grant of a license does not in any way lessen the responsibility of a licensee for the security of the subject matter as imposed by any Government contract or the provisions of existing laws relating to espionage and the national security or the export of technical data. Licensees should apprise themselves of current regulations especially with respect to certain countries, of other agencies, particularly the Office of Defense Trade Controls, Department of State (with respect to Arms, Munitions and Implements of War (22 CFR 121-128)); the Bureau of Industry and Security, Department of Commerce (15 CFR parts 730-774); the Office of Foreign AssetsControl, Department of Treasury (31 CFR Parts 500+) and the Department of Energy.

NOT GRANTED

No license under 35 U.S.C. 184 has been granted at this time, if the phrase "IF REQUIRED, FOREIGN FILING LICENSE GRANTED" DOES NOT appear on this form. Applicant may still petition for a license under 37 CFR 5.12, if a license is desired before the expiration of 6 months from the filing date of the application. If 6 months has lapsed from the filing date of this application and the licensee has not received any indication of a secrecy order under 35 U.S.C. 181, the licensee may foreign file the application pursuant to 37 CFR 5.15(b).

UNITED STATES PATENT AND TRADEMARK OFFICE

UNITED STATES DEPARTMENT OF COMMERCE
United States Patent and Trademark Office
Address: COMMISSIONER FOR PATENTS
P.O. Box 1450
Alexandria, Virginia 22313-1450
www.uspto.gov

STAAS & HALSEY LLP
SUITE 700
1201 NEW YORK AVENUE, N.W.
WASHINGTON, DC 20005

Mail Date: 05/21/2010

Applicant	: Kwang Taek LIM	: DECISION ON REQUEST FOR
Patent Number	: 7648134	: RECALCULATION of PATENT
Issue Date	: 01/19/2010	: TERM ADJUSTMENT IN VIEW
Application No	: 12/055,374	: OF WYETH AND NOTICE OF INTENT TO
Filed	: 03/26/2008	: ISSUE CERTIFICATE OF CORRECTION
		:

The Request for Recalculation is **GRANTED** to the extent indicated.

The patent term adjustment has been determined to be **0** days. The USPTO will *sua sponte* issue a certificate of correction reflecting the amount of PTA days determined by the recalculation.

Prior to the issuance of the certificate of correction, the USPTO will afford patentee an opportunity to be heard and request reconsideration. Accordingly, patentee has **one month or thirty (30) days**, whichever is longer, to file a request for reconsideration of this patent term adjustment calculation. See 35 U.S.C. 154(b)(3)(B)(ii) and 37 CFR 1.322(a)(4). No extensions of time will be granted under 37 CFR 1.136.

Patentee should use document code PET.OP if electronically filing a request for reconsideration of this patent term adjustment calculation. The patentee must also include the information required by 37 CFR 1.705(b)(2) and the fee required by 37 CFR 1.18(e). If patentee does not file a timely request for reconsideration of this patent term adjustment calculation including the information required by 37 CFR 1.705(b)(2) and the fee required by 37 CFR 1.18(e), the USPTO will issue a certificate of correction reflecting the PTA determination noted above.

Patentee should be aware that in order to preserve the right to review in the United States District Court for the District of Columbia of the USPTO patent term adjustment determination, patentee must ensure that he or she also take the steps required under 35 U.S.C. 154(b)(4)(A) in a timely manner. Nothing in the request for recalculation should be construed as providing an alternative time frame for commencing a civil action under 35 U.S.C. 154(b)(4)(A).

Any questions concerning this decision should be directed to the Office of Patent Legal Administration at 571-272-7702.

UNITED STATES PATENT AND TRADEMARK OFFICE

UNITED STATES DEPARTMENT OF COMMERCE
United States Patent and Trademark Office
Address: COMMISSIONER FOR PATENTS
P.O. Box 1450
Alexandria, Virginia 22313-1450
www.uspto.gov

APPLICATION NO.	FILING DATE	FIRST NAMED INVENTOR	ATTORNEY DOCKET NO.	CONFIRMATION NO.
12/055,420	03/26/2008	Daisuke Takuma	JP920050127US2	7756

67158 7590 12/16/2008
IBM - ARC
SHIMOKAJI & ASSOCIATES, P.C.
8911 RESEARCH DRIVE
IRVINE, CA 92618

EXAMINER

ART UNIT	PAPER NUMBER
2161	

NOTIFICATION DATE	DELIVERY MODE
12/16/2008	ELECTRONIC

Please find below and/or attached an Office communication concerning this application or proceeding.

The time period for reply, if any, is set in the attached communication.

Notice of the Office communication was sent electronically on above-indicated "Notification Date" to the following e-mail address(es):

patents@shimokaji.com
MSHIMOKAJI@SHIMOKAJI.COM

UNITED STATES PATENT AND TRADEMARK OFFICE

Commissioner for Patents
United States Patent and Trademark Office
P.O. Box 1450
Alexandria, VA 22313-1450
www.uspto.gov

IBM - ARC
SHIMOKAJI & ASSOCIATES, P.C.
8911 RESEARCH DRIVE
IRVINE CA 92618

In re Application of: TAKUMA et al.
Application No. 12/055,420
Filed: March 26, 2008
For: SYSTEM OF EFFECTIVELY SEARCHING TEXT FOR KEYWORD, AND METHOD THEREOF

DECISION ON REQUEST TO PARTICIPATE IN PATENT PROSECUTION HIGHWAY PILOT PROGRAM AND PETITION TO MAKE SPECIAL UNDER 37 CFR 1.102(d)

This is a decision on the request to participate in the Patent Prosecution Highway (PPH) pilot program and the petition under 37 CFR 1.102(d), filed October 10, 2008, to make the above-identified application special.

The petition is **GRANTED.**

A grantable request to participate in the PPH pilot program and petition to make special require:

(1) The U.S. application must validly claim priority under 35 U.S.C. 119(a) to one or more applications filed in the JPO;

(2) Applicant must submit a copy of the allowable/patentable claim(s) from the JPO application(s) along with an English translation thereof and a statement that the English translation is accurate;

(3) All the claims in the U.S. application must sufficiently correspond or be amended to sufficiently correspond to the allowable/patentable claim(s) in the JPO application(s);

(4) Examination of the U.S. application has not begun;

(5) Applicant must submit a copy of all the office actions from each of the JPO application(s) containing the allowable/patentable claim(s) along with an English translation thereof and a statement that the English translation is accurate;

(6) Applicant must submit an IDS listing the documents cited by the JPO examiner in

the JPO office action along with copies of documents except U.S. patents or U.S. patent application publications; and

(7) The required petition fee under 37 CFR 1.17(h).

The request to participate in the PPH pilot program and petition are found to comply with the above requirements. Accordingly, the above-identified application has been accorded "special" status.

Telephone inquiries concerning this decision should be directed to Mano Padmanabhan at 571-272-4210.

All other inquiries concerning the examination or status of the application is accessible in the PAIR system at http://www.uspto.gov/ebc/index.html.

The application is being forwarded to the examiner for action on the merits commensurate with this decision.

/Mano Padmanabhan/

Mano Padmanabhan
Quality Assurance Specialist, Technology Center 2100, Workgroup 2180
571-272-4210

UNITED STATES PATENT AND TRADEMARK OFFICE

Commissioner for Patents
United States Patent and Trademark Office
P.O. Box 1450
Alexandria, VA 22313-1450
www.uspto.gov

DICKINSON WRIGHT PLLC
38525 WOODWARD AVENUE
SUITE 2000
BLOOMFIELD HILLS, MI 48304

COPY MAILED

JUN 0 8 2009

OFFICE OF PETITIONS

In re Application of	:	
Neil BLYTHE, et al	:	
Application No. 12/055,687	:	DECISION ON PETITION
Filed: March 26, 2008	:	TO WITHDRAW
Attorney Docket No. 231184 (36708-26)	:	FROM RECORD
	:	

This is a decision on the Request to Withdraw as attorney or agent of record under 37 C.F.R. § 1.36(b), filed March 30, 2009.

The request is **APPROVED**.

A grantable request to withdraw as attorney/agent of record must be signed by every attorney/agent seeking to withdraw or contain a clear indication that one attorney is signing on behalf of another/others. The Office requires the practitioner(s) requesting withdrawal to certify that he, she, or they have: (1) given reasonable notice to the client, prior to the expiration of the response period, that the practitioner(s) intends to withdraw from employment; (2) delivered to the client or a duly authorized representative of the client all papers and property (including funds) to which the client is entitled; and (3) notified the client of any responses that may be due and the time frame within which the client must respond, pursuant 37 CFR 10.40(c).

The request was signed by Jerome R. Drouillard on behalf of the attorneys of record associated with Customer No. 27256.

The attorneys of record associated with Customer No. 27256 have been withdrawn.

Applicant is reminded that there is no attorney of record at this time.

The request to change the correspondence address of record is not acceptable as the requested correspondence address is not that of: (1) the first named signing inventor; or (2) an intervening assignee of the entire interest under 37 C.F.R 3.71. All future communications from the Office will be directed to the first named signing inventor at the first copied address below until otherwise properly notified by the applicant.

In order to request or take action in a patent matter, the assignee must establish its ownership of the patent to the satisfaction of the Director. In this regard, a Statement under 37 CFR 3.73(b) must have either: (i) documentary evidence of a chain of title from the original owner to the assignee (*e.g.*, copy of an executed assignment), and a statement affirming that the documentary evidence of the chain of title from the original owner to the assignee was or concurrently is being submitted for recordation pursuant to § 3.11; or (ii) a statement specifying where documentary evidence of a chain of title from the original owner to the assignee is recorded in the assignment records of the Office (*e.g.*, reel and frame number).

Telephone inquiries concerning this decision should be directed to the undersigned at 571-272-6735.

Diane Goodwyn
Petitions Examiner
Office of Petitions

cc: NEIL BLYTHE
12436 RAYMOND MILLS ROAD,
NORTH EAST, PA 16428

cc: GENERAL ELECTRIC COMPANY
1 RIVER ROAD
SCHENECTADY, NY 12345

UNITED STATES PATENT AND TRADEMARK OFFICE

UNITED STATES DEPARTMENT OF COMMERCE
United States Patent and Trademark Office
Address: COMMISSIONER FOR PATENTS
P.O. Box 1450
Alexandria, Virginia 22313-1450
www.uspto.gov

APPLICATION NUMBER	FILING OR 371(C) DATE	FIRST NAMED APPLICANT	ATTY. DOCKET NO./TITLE
12/055,687	03/26/2008	Neil Blythe	231184 (36708-26)

CONFIRMATION NO. 8251

POWER OF ATTORNEY NOTICE

OC000000036351495

27256
Dickinson Wright PLLC
38525 Woodward Avenue
Suite 2000
Bloomfield Hills, MI 48304

Date Mailed: 06/08/2009

NOTICE REGARDING CHANGE OF POWER OF ATTORNEY

This is in response to the Power of Attorney filed 03/30/2009.

- The withdrawal as attorney in this application has been accepted. Future correspondence will be mailed to the new address of record. 37 CFR 1.33.

/dcgoodwyn/

Office of Data Management, Application Assistance Unit (571) 272-4000, or (571) 272-4200, or 1-888-786-0101

UNITED STATES PATENT AND TRADEMARK OFFICE

UNITED STATES DEPARTMENT OF COMMERCE
United States Patent and Trademark Office
Address: COMMISSIONER FOR PATENTS
P.O. Box 1450
Alexandria, Virginia 22313-1450
www.uspto.gov

WHIRLPOOL PATENTS COMPANY - MD 0750
500 RENAISSANCE DRIVE - SUITE 102
ST. JOSEPH, MI 49085

Mail Date: 04/21/2010

Applicant	: GUOLIAN WU	: DECISION ON REQUEST FOR
Patent Number	: 7628031	: RECALCULATION of PATENT
Issue Date	: 12/08/2009	: TERM ADJUSTMENT IN VIEW
Appliction No	: 12/055,699	: OF WYETH AND NOTICE OF INTENT TO
Filed	: 03/26/2008	: ISSUE CERTIFICATE OF CORRECTION
		:

The Request for Recalculation is **GRANTED** to the extent indicated.

The patent term adjustment has been determined to be **66** days. The USPTO will *sua sponte* issue a certificate of correction reflecting the amount of PTA days determined by the recalculation.

Prior to the issuance of the certificate of correction, the USPTO will afford patentee an opportunity to be heard and request reconsideration. Accordingly, patentee has **one month or thirty (30) days**, whichever is longer, to file a request for reconsideration of this patent term adjustment calculation. See 35 U.S.C. 154(b)(3)(B)(ii) and 37 CFR 1.322(a)(4). No extensions of time will be granted under 37 CFR 1.136.

Patentee should use document code PET.OP if electronically filing a request for reconsideration of this patent term adjustment calculation. The patentee must also include the information required by 37 CFR 1.705(b)(2) and the fee required by 37 CFR 1.18(e). If patentee does not file a timely request for reconsideration of this patent term adjustment calculation including the information required by 37 CFR 1.705(b)(2) and the fee required by 37 CFR 1.18(e), the USPTO will issue a certificate of correction reflecting the PTA determination noted above.

Patentee should be aware that in order to preserve the right to review in the United States District Court for the District of Columbia of the USPTO patent term adjustment determination, patentee must ensure that he or she also take the steps required under 35 U.S.C. 154(b)(4)(A) in a timely manner. Nothing in the request for recalculation should be construed as providing an alternative time frame for commencing a civil action under 35 U.S.C. 154(b)(4)(A).

Any questions concerning this decision should be directed to the Office of Patent Legal Administration at 571-272-7702.

UNITED STATES PATENT AND TRADEMARK OFFICE

Commissioner for Patents
United States Patent and Trademark Office
P.O. Box 1450
Alexandria, VA 22313-1450
www.uspto.gov

DANIELS PATENT LAW PLLC
43 CENTRE STREET
CONCORD NH 03301

MAILED

FEB 02 2009

OFFICE OF PETITIONS

In re Application of

THIBODEAU, Michael R. et al.
Application No. 12/055,734
Filed: March 26, 2008
Attorney Docket No. **THIMIC P01AUS**

DECISION ON PETITION
TO WITHDRAW
FROM RECORD

This is a decision on the Request to Withdraw as attorney or agent of record under 37 C.F.R. § 1.36(b), filed December 18, 2008.

The request is **NOT APPROVED**.

The Office has revised its change in procedure for request to withdraw from representation applies to requests filed on or after May 12, 2008.

A grantable request to withdraw as attorney/agent of record must be signed by every attorney/agent seeking to withdraw or contain a clear indication that one attorney is signing on behalf of another/others. The Office requires the practitioner(s) requesting withdrawal to certify that he, she, or they have: (1) given reasonable notice to the client, prior to the expiration of the response period, that the practitioner(s) intends to withdraw from employment; (2) delivered to the client or a duly authorized representative of the client all papers and property (including funds) to which the client is entitled; and (3) notified the client of any responses that may be due and the time frame within which the client must respond, pursuant 37 CFR 10.40(c).

The request cannot be approved because there is no indication that acts (1) thru (3) noted in the above-identified certifications have been performed. See PTO/SB/83 (11-08).

All future communications from the Office will continue to be directed to the above-listed address until otherwise notified by applicant.

Telephone inquiries concerning this decision should be directed to Tredelle Jackson at 571-272- 2783.

Tredelle D. Jackson
Paralegal Specialist
Office of Petitions

UNITED STATES PATENT AND TRADEMARK OFFICE

UNITED STATES DEPARTMENT OF COMMERCE
United States Patent and Trademark Office
Address: COMMISSIONER FOR PATENTS
P.O. Box 1450
Alexandria, Virginia 22313-1450
www.uspto.gov

APPLICATION NO.	FILING DATE	FIRST NAMED INVENTOR	ATTORNEY DOCKET NO.	CONFIRMATION NO.
12/055,762	03/26/2008	Jun Tanida	010482.60114US	8395

7590 01/26/2010
CROWELL & MORING LLP
INTELLECTUAL PROPERTY GROUP
P.O. BOX 14300
WASHINGTON, DC 20044-4300

EXAMINER
AHMED, SAMIR ANWAR

ART UNIT	PAPER NUMBER
2624	

MAIL DATE	DELIVERY MODE
01/26/2010	PAPER

DECISION GRANTING PETITION UNDER 37 CFR 1.138(d)

The declaration of express abandonment is recognized

This is in response to the petition under 37 CFR 1.138(d), requesting for a refund of any previously paid search fee and excess claims fee in the above-identified application.

The petition is granted.

The express abandonment is recognized. Any previously paid search fee and excess claims fee are hereby refunded.

Telephone inquiries should be directed to the Office of Data Management at (571) 272-4200.

Patent Publication Branch
Office of Data Management

Refund Ref:
01/28/2010 [illegible]

Credit Card Refund Total: $510.00

Adjustment date: 01/28/2010 NFARMER
03/27/2008 INTEFSW 00010145 12055762
02 FC:1111 -510.00 OP

FORM PET651G (Rev. 08/07)

UNITED STATES PATENT AND TRADEMARK OFFICE

Commissioner for Patents
United States Patent and Trademark Office
P.O. Box 1450
Alexandria, VA 22313-1450
www.uspto.gov

AKIN GUMP STRAUSS HAUER & FELD, LLP
P O BOX 688
DALLAS, TX 75313-0688

COPY MAILED

JAN 08 2009

In re Application of	:	
Chin-Hsiung CHANG, et al.	:	
Application No. 12/055,782	:	DECISION ON PETITION TO
Filed: March 26, 2008	:	WITHDRAW FROM RECORD
Attorney Docket No. **685038-0005**	:	

This is a decision on the Request to Withdraw as attorney or agent of record under 37 C.F.R. § 1.36(b), filed September 10, 2008.

The request is **APPROVED**.

A grantable request to withdraw as attorney/agent of record must be signed by every attorney/agent seeking to withdraw or contain a clear indication that one attorney is signing on behalf of another/others. A request to withdraw will not be approved unless at least 30 (thirty) days would remain between the date of approval and the later of the expiration date of a time to file a response or the expiration date of the maximum time period which can be extended under 37 C.F.R. § 1.136(a).

The request was signed by Sandford E. Warren, Jr. on behalf of all attorneys of record. All attorneys/agents associated have been withdrawn. Applicant is reminded that there is no attorney of record at this time.

All future communications from the Office will be directed to the first named signing inventor Chin-Hsiung Chang at the first copied address below until otherwise properly notified by the applicant.

Inquiries regarding the examination or status of the application should be directed to the Technology Center at 571-272-2100.

Telephone inquiries concerning this decision should be directed to the undersigned at 571-272-7253.

/Monica A. Graves/
Petitions Examiner, Office of Petitions

cc: **CHIN-HSIUNG CHANG**
947 LIN-SEN ROAD, WU-FONG
TAI-CHUNG, TW 413

cc: **FU-CHUNG YEN**
3952 SUNFLOWER LANE
PLANO, TX 75025

UNITED STATES PATENT AND TRADEMARK OFFICE

Commissioner for Patents
United States Patent and Trademark Office
P.O. Box 1450
Alexandria, VA 22313-1450
www.uspto.gov

TERADYNE, INC.
C/O FOLEY & LARDNER LLP
111 HUNTINGTON AVENUE
26TH FLOOR
BOSTON, MA 02199-7610

MAILED

JUN 08 2010

OFFICE OF PETITIONS

In re Application of	:	
Marc Spehlmann	:	DECISION ON PETITION
Application No. 12/055,785	:	TO WITHDRAW
Filed: March 26, 2008	:	FROM RECORD
Attorney Docket No. 077311-0169	:	

This is a decision on the Request to Withdraw as attorney or agent of record under 37 C.F.R. § 1.36(b), filed April 23, 2010.

The request is **NOT APPROVED** because it is moot.

A review of the file record indicates that on May 17, 2010 the power of attorney to Foley and Lardner LLP was revoked by the assignee of the patent application. Accordingly, the request to withdraw under 37 C.F.R. § 1.36(b) is moot.

All future communications from the Office will be directed to the below-listed address until otherwise notified by applicant.

Telephone inquires concerning this decision should be directed to the undersigned at 571-272-7751. All other inquires concerning either the examination or status of the application should be directed to the Technology Center.

Joan Olszewski
Petitions Examiner
Office of Petitions

cc: TERADYNE, INC.
c/o WOLF, GREENFIELD & SACKS, P.C.
600 ATLANTIC AVENUE
BOSTON MA 02210-2206

UNITED STATES PATENT AND TRADEMARK OFFICE

Commissioner for Patents
United States Patent and Trademark Office
P.O. Box 1450
Alexandria, VA 22313-1450
www.uspto.gov

LORD CORPORATION
PATENT & LEGAL SERVICES
111 LORD DRIVE
P.O. Box 8012
CARY NC 27512-8012

COPY MAILED
JAN 30 2009
OFFICE OF PETITIONS

In re Application of
Timothy D. Fornes, et. al.
Application No. 12/055,789
Filed: March 26, 2008
Attorney Docket No. IR-3648 (CRD)

DECISION ON PETITION

This is a decision on the petition under the unintentional provisions of 37 CFR 1.137(b), filed December 18, 2008, to revive the above-identified application.

The petition is **GRANTED**.

The application became abandoned for failure to reply in a timely manner to the Notice to File Missing Parts (Notice), mailed April 9, 2008. The Notice set a period for reply of two (2) months from the mail date of the Notice. No extensions of time under the provisions of 37 CFR 1.136(a) were obtained. Accordingly, the application became abandoned on June 10, 2008.

The petition satisfies the requirements of 37 CFR 1.137(b) in that petitioner has supplied (1) the reply in the form of $130 for the surcharge fee and a properly executed declaration (2) the petition fee of $1620, and (3) a proper statement of unintentional delay.

Telephone inquiries concerning this decision should be directed to Denise Williams at (571) 272-8930.

This application is being referred to the Office of Patent Application Processing for further processing in accordance with this decision on petition.

Brian W. Brown
Petitions Examiner
Office of Petitions

UNITED STATES PATENT AND TRADEMARK OFFICE

UNITED STATES DEPARTMENT OF COMMERCE
United States Patent and Trademark Office
Address: COMMISSIONER FOR PATENTS
P.O. Box 1450
Alexandria, Virginia 22313-1450
www.uspto.gov

APPLICATION NO.	FILING DATE	FIRST NAMED INVENTOR	ATTORNEY DOCKET NO.	CONFIRMATION NO.
12/055,836	03/26/2008	MASAHIRO SHIMANUKI	J-08-0147	8531

7590 03/21/2009
NEC CORPORATION OF AMERICA
6535 N. STATE HWY 161
IRVING, TX 75039

EXAMINER
BOST, DWAYNE D

ART UNIT	PAPER NUMBER
2617	

MAIL DATE	DELIVERY MODE
03/21/2009	PAPER

DECISION GRANTING PETITION UNDER 37 CFR 1.138(d)

The declaration of express abandonment is recognized

This is in response to the petition under 37 CFR 1.138(d), requesting for a refund of any previously paid search fee and excess claims fee in the above-identified application.

The petition is granted.

The express abandonment is recognized. Any previously paid search fee and excess claims fee are hereby refunded.

Telephone inquiries should be directed to the Office of Data Management at (571) 272-4200.

Nioni Farmer

Patent Publication Branch
Office of Data Management

Refund Ref:
03/23/2009 NFARMER 0000166588

CHECK Refund Total: $720.00

Adjustment date: 03/23/2009 NFARMER
03/27/2008 INTEFSW 00010651 12055836
02 FC:1111 -510.00 OP
04 FC:1201 -210.00 OP

FORM PET651G (Rev. 08/07)

UNITED STATES PATENT AND TRADEMARK OFFICE

UNITED STATES DEPARTMENT OF COMMERCE
United States Patent and Trademark Office
Address: COMMISSIONER FOR PATENTS
P.O. Box 1450
Alexandria, Virginia 22313-1450
www.uspto.gov

APPLICATION NO.	FILING DATE	FIRST NAMED INVENTOR	ATTORNEY DOCKET NO.	CONFIRMATION NO.
12/055,857	03/26/2008	William H. Eby	1421-328	8559

32905 7590 01/28/2010
JONDLE & ASSOCIATES P.C.
858 HAPPY CANYON ROAD SUITE 230
CASTLE ROCK, CO 80108

EXAMINER
COLLINS, CYNTHIA E

ART UNIT	PAPER NUMBER
1638	

NOTIFICATION DATE	DELIVERY MODE
01/28/2010	ELECTRONIC

Please find below and/or attached an Office communication concerning this application or proceeding.

The time period for reply, if any, is set in the attached communication.

Notice of the Office communication was sent electronically on above-indicated "Notification Date" to the following e-mail address(es):

JondleOA@jondlelaw.com

UNITED STATES PATENT AND TRADEMARK OFFICE

Commissioner for Patents
United States Patent and Trademark Office
P.O. Box 1450
Alexandria, VA 22313-1450
www.uspto.gov

JONDLE & ASSOCIATES P.C.
858 HAPPY CANYON ROAD SUITE 230
CASTLE ROCK CO 80108

JAN 2 8 2010

In re Application of:
William H. Eby
Serial No.: 12/055,857
Filed: March 26, 2008
Attorney Docket No.: **1421-328**

: PETITION DECISION

This is in response to the petition under 37 CFR § 1.59(b), filed September 28, 2009, to expunge information from the above identified application. This application has not been allowed.

Petitioner requests that the Reply to Request for Information under 37 CFR 1.105, and attachment thereto, submitted to the Patent Office on September 28, 2009, be expunged from the record. Petitioner states either: (A) that the information contains trade secret material, proprietary material and/or material that is subject to a protective order which has not been made public; or (B) that the information submitted was unintentionally submitted and the failure to obtain its return would cause irreparable harm to the party who submitted the information or to the party in interest on whose behalf the information was submitted, and the information has not otherwise been made public. The petition fee set forth in 37 CFR § 1.17(g) has been paid.

This is an examined application which is currently under non-final rejection. As such the information provided has been reviewed, in part, but proceedings in the application have not been terminated. As stated in M.P.E.P. 724, upon allowance or other action closing prosecution in an application, petition may be made for return of Proprietary information. The information cannot be expunged at this time.

The petition is **DISMISSED**. Petitioner may resubmit the petition subsequent to a Notice of Allowability or *ex parte Quayle* action being mailed in the application. No additional petition fee will be required at that time.

Should there be any questions about this decision please contact Marianne C. Seidel by letter addressed to Director, TC 1600, at the address listed above, or by telephone at 571-272-0584 or by facsimile sent to the general Office facsimile number, 703-872-9306.

Marianne C. Seidel
Quality Assurance Specialist
Technology Center 1600

UNITED STATES PATENT AND TRADEMARK OFFICE

UNITED STATES DEPARTMENT OF COMMERCE
United States Patent and Trademark Office
Address: COMMISSIONER FOR PATENTS
P.O. Box 1450
Alexandria, Virginia 22313-1450
www.uspto.gov

APPLICATION NO.	FILING DATE	FIRST NAMED INVENTOR	ATTORNEY DOCKET NO.	CONFIRMATION NO.
12/055,857	03/26/2008	William H. Eby	1421-328	8559

32905 7590 04/14/2010
JONDLE & ASSOCIATES P.C.
858 HAPPY CANYON ROAD SUITE 230
CASTLE ROCK, CO 80108

EXAMINER
COLLINS, CYNTHIA E

ART UNIT	PAPER NUMBER
1638	

NOTIFICATION DATE	DELIVERY MODE
04/14/2010	ELECTRONIC

Please find below and/or attached an Office communication concerning this application or proceeding.

The time period for reply, if any, is set in the attached communication.

Notice of the Office communication was sent electronically on above-indicated "Notification Date" to the following e-mail address(es):

JondleOA@jondlelaw.com

UNITED STATES PATENT AND TRADEMARK OFFICE

APR 1 4 2010

Commissioner for Patents
United States Patent and Trademark Office
P.O. Box 1450
Alexandria, VA 22313-1450
www.uspto.gov

JONDLE & ASSOCIATES P.C.
858 HAPPY CANYON ROAD SUITE 230
CASTLE ROCK CO 80108

In re Application of:	:
William H. Eby	: PETITION DECISION
Serial No: 12/055,857	:
Filed: March 26, 2008	:
Attorney Docket No.: **1421-328**	

This is in response to the petition under 37 CFR § 1.59(b), filed April 9, 2010, to expunge information from the above identified application. This application has been allowed.

Petitioner requests that the Reply to Request for Information Under 37 CFR 1.105, and all attachments thereto, submitted to the Patent Office on September 28, 2009 be expunged from the record. Petitioner states either: (A) that the information contains trade secret material, proprietary material and/or material that is subject to a protective order which has not been made public; or (B) that the information submitted was unintentionally submitted and the failure to obtain its return would cause irreparable harm to the party who submitted the information or to the party in interest on whose behalf the information was submitted, and the information has not otherwise been made public. The petition fee set forth in 37 CFR § 1.17(g) has been paid.

The reasons set forth in this petition establishes to the satisfaction of the Director that expungement of the information is appropriate. The file entry for this document has been closed and as such the document is no longer publicly available, which is the IFW equivalent to removal of a paper document from a paper file wrapper.

Therefore, petitioner's petition is GRANTED.

Should there be any questions about this decision please contact Marianne C. Seidel by letter addressed to Director, TC 1600, at the address listed above, or by telephone at 571-272-0584 or by facsimile sent to the general Office facsimile number, 703-872-9306.

Marianne C. Seidel
Quality Assurance Specialist
Technology Center 1600

Commissioner for Patents
United States Patent and Trademark Office
P.O. Box 1450
Alexandria, VA 22313-1450
www.uspto.gov

CST

SEP 23 2008

In re application of Tsutomu Kanno et al Serial No. 12/055,882 Filed: March 26, 2008 For: ELECTRIC POWER GENERATION METHOD USING THERMOELECTRIC POWER GENERATION ELEMENT, THERMOELECTRIC POWER GENERATION ELEMENT	DECISION ON REQUEST TO PARTICIPATE IN PATENT PROSECUTION HIGHWAY PROGRAM AND PETITION TO MAKE SPECIAL UNDER 37 CFR 1.102(d)

This is a decision on the request to participate in the Patent Prosecution Highway (PPH) program and the petition under 37 CFR 1.102(d) to make the above-identified application special, filed July 11, 2008.

The request and petition are **DISMISSED**.

A grantable request to participate in the PPH pilot program and petition to make special require:

(1) The U.S. application must validly claim priority under 35 U.S.C. 119(a) to one or more applications filed in the JPO, note where the JPO application with similar claims is not the same application from which the U.S. application claims priority that the applicant must identify the relationship between the JPO application with similar claims and the JPO priority application;

(2) Applicant must submit a copy of:

a. The allowable/patentable claim(s) from the JPO application(s) or if a copy of the allowable/patentable claims is available via the Dossier Access System (DAS) applicant may request the USPTO to obtain a copy from DAS; however, if the USPTO is unable to obtain a copy from the DAS, the applicant will be required to submit a copy;
b. An English translation of the allowable/ patentable claim(s), if applicable; and
c. A statement that the English translation is accurate, if applicable;

(3) Applicant must:
   a. Ensure all the claims in the U.S. application must sufficiently correspond or be amended to sufficiently correspond to the allowable/patentable claim(s) in the JPO application(s); and
   b. Submit a claims correspondence table in English;

(4) Examination of the U.S. application has not begun;

(5) Applicant must submit:
   a. Documentation of prior office action:
      i. a copy of the office action(s) just prior to the "Decision to Grant a Patent" from each of the JPO application(s) containing the allowable/patentable claims(s) or
      ii. if the allowable/patentable claim(s) are from "Notification of Reasons for Refusal" then the Notification of Reasons for Refusal or
      iii. if the JPO application is a first action allowance then no office action from the JPO is necessary should be indicated on the request/petition form:
      Further, if a copy of the documents from a or b is available via the Dossier Access System (DAS), applicant may request the USPO obtain a copy from the DAS; however, if the USPTO is unable to obtain a copy of the DAS, the applicant will be required to submit a copy;
   b. An English language translation of the JPO Office action from (5)(a)(i)-(ii) above if applicable; and
   c. A statement that the English translation is accurate;

(6) Applicant must submit:
   a. An IDS listing the documents cited by the JPO examiner in the JPO office action (unless already submitted in this application)
   b. Copies of documents except U.S. patents or U.S. patent application publications (unless already submitted in this application); and

(7) The required petition fee under 37 CFR 1.17(h).

The request to participate in the PPH pilot program and petition fail because:

(5) Applicant must submit: documentation of prior office action. In the "Required Statement" submitted by applicant on July 11, 2008, it is stated that "Applicants state that the enclosed translation of the claims of the corresponding Japanese application as well as the enclosed translation of the JPO Office Action are accurate." While a translation of the claims has been located, it appears that the translation of the JPO Office Action has not been provided. An attempt to obtain the latest JPO office action via Dossier Access System was made, but it was unsuccessful.

Additionally, because no JPO Office Action has been provided, it cannot be determined if the documents cited by the JPO examiner in the JPO office action are included in the IDS of March 26, 2008.

Applicant is given a time period of **ONE MONTH OR THIRTY DAYS**, whichever is longer, from the mailing date of this decision to correct the deficiencies. **NO EXTENSION OF TIME UNDER 37 CFR 1.136 IS PERMITTED.** If the deficiencies are not corrected within the time period given, the application with await action in its regular turn.

Any inquiry regarding this decision should be directed to Christine Tierney, Quality Assurance Specialist, at (571) 272-1055.

All other inquiries concerning the examination or status of the application is accessible in the PAIR system at http://www.uspto.gov/ebc/index.html.

/Christine Tierney/

Christine Tierney
Quality Assurance Specialist
Technology Center 1700

Commissioner for Patents
United States Patent and Trademark Office
P.O. Box 1450
Alexandria, VA 22313-1450
www.uspto.gov

CST

DEC 1 2008

In re application of Tsutomu Kanno et al Serial No. 12/055,882 Filed: March 26, 2008 For: ELECTRIC POWER GENERATION METHOD USING THERMOELECTRIC POWER GENERATION ELEMENT, THERMOELECTRIC POWER GENERATION ELEMENT	:	DECISION ON REQUEST TO PARTICIPATE IN PATENT PROSECUTION HIGHWAY PROGRAM AND PETITION TO MAKE SPECIAL UNDER 37 CFR 1.102(d)

This is a decision on the renewed request to participate in the Patent Prosecution Highway (PPH) program filed October 2, 2008.

The request and petition are **GRANTED**.

A grantable request to participate in the PPH program and petition to make special require:

(1) The U.S. application must validly claim priority under 35 U.S.C. 119(a) to one or more applications filed in the JPO, note where the JPO application with similar claims is not the same application from which the U.S. application claims priority that the applicant must identify the relationship between the JPO application with similar claims and the JPO priority application;

(2) Applicant must submit a copy of:
a. The allowable/patentable claim(s) from the JPO application(s) or if a copy of the allowable/patentable claims is available via the Dossier Access System (DAS) applicant may request the USPTO to obtain a copy from DAS; however, if the USPTO is unable to obtain a copy from the DAS, the applicant will be required to submit a copy;
b. An English translation of the allowable/ patentable claim(s), if applicable; and
c. A statement that the English translation is accurate, if applicable;

(3) Applicant must:
a. Ensure all the claims in the U.S. application must sufficiently correspond or be amended to sufficiently correspond to the allowable/patentable claim(s) in the JPO application(s); and
b. Submit a claims correspondence table in English;

(4) Examination of the U.S. application has not begun;

(5) Applicant must submit:
a. Documentation of prior office action:
i. a copy of the office action(s) just prior to the "Decision to Grant a Patent" from each of the JPO application(s) containing the allowable/patentable claims(s) or
ii. if the allowable/patentable claim(s) are from "Notification of Reasons for Refusal" then the Notification of Reasons for Refusal or
iii. if the JPO application is a first action allowance then no office action from the JPO is necessary should be indicated on the request/petition form:
Further, if a copy of the documents from a or b is available via the Dossier Access System (DAS), applicant may request the USPO obtain a copy from the DAS; however, if the USPTO is unable to obtain a copy of the DAS, the applicant will be required to submit a copy;
b. An English language translation of the JPO Office action from (5)(a)(i)-(ii) above if applicable; and
c. A statement that the English translation is accurate;

(6) Applicant must submit:
a. An IDS listing the documents cited by the JPO examiner in the JPO office action (unless already submitted in this application)
b. Copies of documents except U.S. patents or U.S. patent application publications (unless already submitted in this application); and

(7) The required petition fee under 37 CFR 1.17(h).

The request to participate in the PPH program and petition comply with the above requirements. Accordingly, the above-identified application has been accorded "special" status.

The application is being forwarded to the examiner for action on the merits commensurate with this decision.

Any inquiry regarding this decision should be directed to Christine Tierney, Quality Assurance Specialist, at (571) 272-1055.

All other inquiries concerning the examination or status of the application is accessible in the PAIR system at http://www.uspto.gov/ebc/index.html.

/Christine Tierney/

Christine Tierney
Quality Assurance Specialist
Technology Center 1700

UNITED STATES PATENT AND TRADEMARK OFFICE

Commissioner for Patents
United States Patent and Trademark Office
P.O. Box 1450
Alexandria, VA 22313-1450
www.uspto.gov

Hanley, Flight & Zimmerman, LLC
150 S. Wacker Dr. Suite 2100
Chicago IL 60606

MAILED

MAR 18 2009

OFFICE OF PETITIONS

In re Application of:	:	
Deng et al.	:	DECISION DISMISSING
Application No.: 12/055887	:	PETITION UNDER
Filing or 371(c) Date: 03/26/2008	:	37 CFR 1.47(a)
Title of Invention:	:	
METHODS AND APPARATUS TO	:	
CALCULATE AUDIENCE ESTIMATIONS	:	

This Decision is in response to the "Petition to Waive Inventor Signature Under 37 CFR 1.47(a)," filed September 5, 2008, and on the "Petition to Waive Inventor Signature Under 37 CFR 1.47(b)," filed February 13, 2009. The petitions are properly treated under 37 CFR 1.47(a), to allow the other inventor(s) to proceed with the application on behalf of himself or herself and the nonsigning inventor(s)[1].

The petition is **dismissed**.

Rule 47 applicant is given TWO (2) MONTHS from the mailing date of this decision to reply, correcting the below-noted deficiencies. Any reply should be entitled "Request for Reconsideration of Petition Under [insert the applicable code section]"; should only address the deficiencies noted below, except that the reply may include an oath or declaration executed by the non-signing inventor. Failure to respond will result in abandonment of the application. Any extensions of time will be governed by 37 CFR 1.136(a).

Background

The above-identified application was filed on March 26, 2008, without, a fully executed oath or declaration. The Office mailed a Notice to File Missing Parts of Nonprovisional Application, on

[1] Rule 47(a) applies where a joint inventor refuses to join in an application for patent or cannot be found or reached after diligent effort, the application may be made by the other inventor on behalf of himself or herself and the nonsigning inventor.
Rule 47(b) applies whenever all of the inventors refuse to execute an application for patent, or cannot be found or reached after diligent effort, a person to whom an inventor has assigned or agreed in writing to assign the invention, or who otherwise shows sufficient proprietary interest in the matter justifying such action, may make application for patent on behalf of and as agent for all the inventors.

April 11, 2008, and a new Notice to File Missing Parts of Nonprovisional Application, on December 16, 2008, requiring *inter alia*, a properly signed oath or declaration.

The present petition

Applicant files the present petitions wherein Applicant asserts that the nonsigning inventor refuses to join in the application. In support of this assertion, Applicant files a Statement of Facts wherein Applicant provides that the Declaration and Assignment documents were forwarded via email to the nonsigning inventor. Applicant further provides that the nonsigning inventor acknowledged receipt of the Declaration and Assignment documents, and thereafter attempted to solicit unreasonable compensation from the assignee in exchange for his signature on the documents. A copy of the email wherein the nonsigning inventor offered to assign ownership of the application to the assignee in exchange for a one time payment, has been included with the petition.

Applicable Law, Rules and MPEP

A grantable petition under 37 CFR 1.47(a) requires: (1) proof that the non-signing inventor cannot be reached or refuses to sign the oath or declaration after having been presented with the application papers (specification, claims and drawings); (2) an acceptable oath or declaration in compliance with 35 U.S.C. §§ 115 and 116; (3) the petition fee; and (4) a statement of the last known address of the non-signing inventor. Applicant lacks item (1) set forth above.

As to item (1), the MPEP provides:

> A refusal by an inventor to sign an oath or declaration when the inventor has not been presented with the application papers does not itself suggest that the inventor is refusing to join the application unless it is clear that the inventor understands exactly what he or she is being asked to sign and refuses to accept the application papers. A copy of the application papers should be sent to the last known address of the nonsigning inventor, or, if the nonsigning inventor is represented by counsel, to the address of the nonsigning inventor's attorney. The fact that an application may contain proprietary information does not relieve the 37 CFR 1.47 applicant of the responsibility to present the application papers to the inventor if the inventor is willing to receive the papers in order to sign the oath or declaration. It is noted that the inventor may obtain a complete copy of the application, unless the inventor has assigned his or her interest in the application, and the assignee has requested that the inventor not be permitted access. See MPEP § 106. It is reasonable to require that the inventor be presented with the application papers before a petition under 37 CFR 1.47 is granted since such a procedure ensures that the inventor is apprised of the application to which the oath or declaration is directed. In re Gray, 115 USPQ 80 (Comm'r Pat. 1956). Where a refusal of the inventor to sign the application papers is alleged, the

> circumstances of the presentation of the application papers and of the refusal must be specified in a statement of facts by the person who presented the inventor with the application papers and/or to whom the refusal was made. Statements by a party not present when an oral refusal is made will not be accepted.

MPEP 409.03(d).

Analysis

Applicant has not presented evidence that a copy of the application papers should be sent to the last known address of the non-signing inventor. Absent an express refusal to join in the application, Applicant must present a copy of the application papers to the nonsigning inventor. The MPEP further provides

> Proof that a bona fide attempt was made to present a copy of the application papers (specification, including claims, drawings, and oath or declaration) to the nonsigning inventor for signature, but the inventor refused to accept delivery of the papers or expressly stated that the application papers should not be sent, may be sufficient. When there is an express oral refusal, that fact along with the time and place of the refusal must be stated in the statement of facts. When there is an express written refusal, a copy of the document evidencing that refusal must be made part of the statement of facts. The document may be redacted to remove material not related to the inventor's reasons for refusal.
> When it is concluded by the 37 CFR 1.47 applicant that a nonsigning inventor's conduct constitutes a refusal, all facts upon which that conclusion is based should be stated in the statement of facts in support of the petition or directly in the petition. If there is documentary evidence to support facts alleged in the petition or in any statement of facts, such evidence should be submitted. Whenever a nonsigning inventor gives a reason for refusing to sign the application oath or declaration, that reason should be stated in the petition. (Emphasis supplied).

MPEP 409.03(d).

In this instance, Applicant asserts that a copy of the Declaration and Assignment was sent to the nonsigning inventor via email. However, Applicant must make a bona fide attempt to present a copy of the application to the nonsigning inventor. Applicant is cautioned that receipt of an email transmission must demonstrated by Applicant before a petition may be granted. While receipt of an email may be confirmed by the sender, receipt of an email attachment may not be confirmed by the sender. Applicant is advised to mail the application (specification, claims and drawings), to the last known address of the inventor. That address should be the last known address at which the inventor customarily receives mail. See MPEP § 605.03. Ordinarily, the last known address will be the last known residence of the nonsigning inventor.

Conclusion

Applicant must make a bona fide attempt to present a copy of the application to the nonsigning inventor before a refusal to join in the application may be alleged.

Further correspondence with respect to this matter should be addressed as follows:

By mail:	Director for Patents PO Box 1450 Alexandria, VA 22313-1450
By FAX:	(571) 273-8300 Attn: Office of Petitions
By hand:	Customer Service Window Randolph Building 401 Dulany Street Alexandria, VA 22314

Telephone inquiries concerning this matter should be directed to the undersigned at (571) 272-3232.

/Derek L. Woods/
Derek L. Woods
Attorney
Office of Petitions

UNITED STATES PATENT AND TRADEMARK OFFICE

Commissioner for Patents
United States Patent and Trademark Office
P.O. Box 1450
Alexandria, VA 22313-1450
www.uspto.gov

Hanley, Flight & Zimmerman, LLC
150 S. Wacker Dr. Suite 2100
Chicago IL 60606

COPY MAILED

AUG 2 4 2009

OFFICE OF PETITIONS

In re Application of:	:	
Thomas Austin Tinsley	:	DECISION GRANTING
Application No.: 12/055887	:	PETITION UNDER
Filing or 371(c) Date: 03/26/2008	:	37 CFR 1.47(b)
Title of Invention:	:	
METHODS AND APPARATUS TO	:	
CALCULATE AUDIENCE ESTIMATIONS	:	

This Decision is in response to the "Request for Reconsideration of Petition to Waive Inventor Signature Pursuant to 37 CFR 1.47(a)," filed May 18, 2009, to allow a person to whom an inventor has assigned or agreed in writing to assign the invention, or who otherwise shows sufficient proprietary interest in the matter justifying such action, to make application on behalf of and as agent for all inventors. The petition is properly treated under 37 CFR 1.47(b).

The petition is **granted**.

The above-identified application and papers have been reviewed and found in compliance with 37 CFR 1.47(b). This application is hereby accorded Rule 1.47(b) status.

Petitioner has shown that the non-signing inventor, Thomas Austin Tinsley, refuses to join in the application.

As provided in Rule 1.47, this Office will forward notice of this application's filing to the non-signing inventors at the addresses given in the Petition. Notice of the filing of this application will also be published in the Official Gazette.

The application file is being referred to the Office of Patent Application Processing for continued processing in the normal course of business.

Telephone inquiries related to this decision may be directed to the undersigned at (571) 272-3232.

/Derek L. Woods/
Derek L. Woods
Attorney
Office of Petitions

UNITED STATES PATENT AND TRADEMARK OFFICE

Commissioner for Patents
United States Patent and Trademark Office
P.O. Box 1450
Alexandria, VA 22313-1450
www.uspto.gov

MR. THOMAS AUSTIN TINSLEY
7337 OTTER CREEK DRIVE
NEW PORT RICHEY, FL 34655-4018

COPY MAILED

AUG 2 4 2009

OFFICE OF PETITIONS

In re Application of:	:	
Thomas Austin Tinsley	:	
Application No.: 12/055887	:	LETTER
Filing or 371(c) Date: 03/26/2008	:	
Title of Invention:	:	
METHODS AND APPARATUS TO	:	
CALCULATE AUDIENCE ESTIMATIONS	:	

Dear Mr. Tinsley:

You are named the inventor in the above-identified United States patent application filed under the provisions of 35 U.S.C. 116 (United States Code) and 37 CFR 1.47(b), Rules of Practice in Patent Cases. Should a patent be granted on the application you will be designated therein as the inventor.

As the inventor you are entitled to inspect any paper in the file wrapper of the application, order copies of all or any part thereof (at a prepaid cost per 37 CFR 1.19) or make your position of record in the application. Alternatively, you may arrange to do any of the preceding through a registered patent attorney or agent presenting written authorization from you. If you care to join the application, counsel of record (see below) would presumably assist you. Joining in the application would entail the filing of an appropriate oath or declaration by you pursuant to 37 CFR 1.63.

Telephone inquiries regarding this communication should be directed to the undersigned at (571) 272-3232. Requests for information regarding your application should be directed to the File Information Unit at (703) 308-2733. Information regarding how to pay for and order a copy of the application, or a specific paper in the application, should be directed to Certification Division at (703) 308-9726 or 1-800-972-6382 (outside the Washington D.C. area).

/Derek L. Woods/
Derek L. Woods
Attorney
Office of Petitions

CC: Hanley, Flight & Zimmerman, LLC
150 S. Wacker Dr. Suite 2100
Chicago IL 60606

PTO/SB/130 (03-08)
Approved for use through 03/31/2008. OMB 0651- 0031
U.S. Patent and Trademark Office; U.S. DEPARTMENT OF COMMERCE
Under the Paperwork Reduction Act of 1995, no persons are required to respond to a collection of information unless it contains a valid OMB control number

PETITION TO MAKE SPECIAL BASED ON AGE FOR ADVANCEMENT OF EXAMINATION UNDER 37 CFR 1.102(c)(1)

Application Information

Application Number	12055989	Confirmation Number	8756	Filing Date	2008-03-26
Attorney Docket Number (optional)	SPRGP001	Art Unit		Examiner	
First Named Inventor	Joseph E. Springer				
Title of Invention	INTERNAL COMBUSTION ENGINE TWIN POWER UNIT HAVING AN OSCILLATING CYLINDER				

Attention: Office of Petitions

An application may be made special for advancement of examination upon filing of a petition showing that the applicant is 65 years of age, or more. No fee is required with such a petition. See 37 CFR 1.102(c)(1) and MPEP 708.02 (IV).

APPLICANT HEREBY PETITIONS TO MAKE SPECIAL FOR ADVANCEMENT OF EXAMINATION IN THIS APPLICATION UNDER 37 CFR 1.102(c)(1) and MPEP 708.02 (IV) ON THE BASIS OF THE APPLICANT'S AGE.

A grantable petition requires one of the following items:
(1) Statement by one named inventor in the application that he/she is 65 years of age, or more; or
(2) Certification by a registered attorney/agent having evidence such as a birth certificate, passport, driver's license, etc. showing one named inventor in the application is 65 years of age, or more.

Name of Inventor who is 65 years of age, or older

Given Name	Middle Name	Family Name	Suffix
Joseph	E.	Springer	

A signature of the applicant or representative is required in accordance with 37 CFR 1.33 and 10.18.
Please see 37 CFR 1.4(d) for the format of the signature.

Select (1) or (2) :

○ (1) I am an inventor in this application and I am 65 years of age, or more.

◉ (2) I am an attorney or agent registered to practice before the Patent and Trademark Office, and I certify that I am in possession of evidence, and will retain such in the application file record, showing that the inventor listed above is 65 years of age, or more.

Signature	/Joe A. Brock /#46021/	Date (YYYY-MM-DD)	2008-03-26
Name	Joe A. Brock	Registration Number	46021

PTO/SB/130 (03-08)
Approved for use through 03/31/2008. OMB 0651- 0031
U.S. Patent and Trademark Office; U.S. DEPARTMENT OF COMMERCE
Under the Paperwork Reduction Act of 1995, no persons are required to respond to a collection of information unless it contains a valid OMB control number

Privacy Act Statement

The Privacy Act of 1974 (P.L. 93-579) requires that you be given certain information in connection with your submission of the attached form related to a patent application or patent. Accordingly, pursuant to the requirements of the Act, please be advised that: (1) the general authority for the collection of this information is 35 U.S.C. 2(b)(2); (2) furnishing of the information solicited is voluntary; and (3) the principal purpose for which the information is used by the U.S. Patent and Trademark Office is to process and/or examine your submission related to a patent application or patent. If you do not furnish the requested information, the U.S. Patent and Trademark Office may not be able to process and/or examine your submission, which may result in termination of proceedings or abandonment of the application or expiration of the patent.

The information provided by you in this form will be subject to the following routine uses:

1. The information on this form will be treated confidentially to the extent allowed under the Freedom of Information Act (5 U.S.C. 552) and the Privacy Act (5 U.S.C. 552a). Records from this system of records may be disclosed to the Department of Justice to determine whether the Fr eedom of Information Act requires disclosure of these records.

2. A record from this system of records may be disclosed, as a routine use, in the course of presenting evidence to a court, magistrate, or administrative tribunal, including disclosures to opposing counsel in the course of settlement negotiations.

3. A record in this system of records may be disclosed, as a routine use, to a Member of Congress submitting a request involving an individual, to whom the record pertains, when the individual has requested assistance from the Member with respect to the subject matter of the record.

4. A record in this system of records may be disclosed, as a routine use, to a contractor of the Agency having need for the information in order to perform a contract. Recipients of information shall be required to comply with the requirements of the Privacy Act of 1974, as amended, pursuant to 5 U.S.C. 552a(m).

5. A record related to an International Application filed under the Patent Cooperation Treaty in this system of records may be disclosed, as a routine use, to the International Bureau of the World Intellectual Property Organization, pursuant to the Patent Cooperation Treaty.

6. A record in this system of records may be disclosed, as a routine use, to another federal agency for purposes of National Security review (35 U.S.C. 181) and for review pursuant to the Atomic Energy Act (42 U.S.C. 218(c)).

7. A record from this system of records may be disclosed, as a routine use, to the Administrator, General Services, or his/her designee, during an inspection of records conducted by GSA as part of that agency's responsibility to recommend improvements in records management practices and programs, under authority of 44 U.S.C. 2904 and 2906. Such disclosure shall be made in accordance with the GSA regulations governing inspection of records for this purpose, and any other relevant (i.e., GSA or Commerce) directive. Such disclosure shall not be used to make determinations about indivi duals.

8. A record from this system of records may be disclosed, as a routine use, to the public after either publication of the application pursuant to 35 U.S.C. 122(b) or issuance of a patent pursuant to 35 U.S.C. 151. Further, a record may be disclosed, subject to the limitations of 37 CFR 1.14, as a routine use, to the public if the record was filed in an application which became abandoned or in which the proceedings were terminated and which application is referenced by either a published application, an application open to public inspections or an issued patent.

9. A record from this system of records may be disclosed, as a routine use, to a Federal, State, or local law enforcement agency, if the USPTO becomes aware of a violation or potential violation of law or regulation.

UNITED STATES PATENT AND TRADEMARK OFFICE

Commissioner for Patents
United States Patent and Trademark Office
P.O. Box 1450
Alexandria, VA 22313-1450
www.uspto.gov

In re Application of
Joseph E. Springer

Application No. 12055989

Filed:

Attorney Docket No. SPRGP001

:DECISION ON PETITION TO MAKE SPECIAL
:UNDER 37 CFR 1.102(c)(1)

This is a decision on the electronic petition under 37 CFR 1.102 (c)(1) ,filed 26-MAR-2008 to make the above-identified application special based on applicant's age as set forth in MPEP § 708.02, Section IV.

The petition is **GRANTED**.

A grantable petition to make an application special under 37 CFR 1.102(c)(1), MPEP § 708.02, Section IV: Applicant's Age must include a statement by applicant or a registered practitioner having evidence that applicant is at least 65 years of age. No fee is required.

Accordingly, the above-identified application has been accorded “special” status and will be taken up for action by the examiner upon the completion of all pre-examination processing.

Telephone inquires concerning this electronic decision should be directed to the Electronic Business Center at 866-217-9197.

All other inquires concerning either the examination or status of the application should be directed to the Technology Center.

UNITED STATES PATENT AND TRADEMARK OFFICE

Commissioner for Patents
United States Patent and Trademark Office
P.O. Box 1450
Alexandria, VA 22313-1450
www.uspto.gov

DORSEY & WHITNEY LLP
INTELLECTUAL PROPERTY DEPARTMENT
250 PARK AVENUE
NEW YORK NY 10177

APR 16 2008

In re Application of: Chang, Sung Yong Serial No.:12/055,993 Filed: March 26, 2008 Title: ARTIFICIAL NAIL/TIP ARRANGEMENTS HAVING MULTIPLE SECTIONS	DECISION ON PETITION TO MAKE SPECIAL FOR NEW APPLICATION UNDER 37 C.F.R. § 1.102 & M.P.E.P. § 708.02

This is a decision on the petition filed on March 26, 2008 to make the above-identified application special for accelerated examination procedure under 37 C.F.R. § 1.102(d).

The petition to make the application special is **DENIED**.

REGULATION AND PRACTICE

To be eligible for accelerated examination under 37 C.F.R. § 1.102(d) and pursuant to the "Change to Practice for Petitions in Patent Applications to Make Special and for Accelerated Examination" published in the Federal Register on June 26, 2006 (71 Fed. Reg. 36323), the following conditions must be satisfied:

1. The application must be a non-reissue utility or design application filed under 37 CFR 1.111(a);
2. The application, the petition and the required fees must be filed electronically using the USPTO's electronic filing system (EFS), or EFS-web; if not filed electronically, a statement asserting that EFS and EFS-web were not available during the normal business hours;
3. The application, at the time of filing, must be complete under 37 CFR 1.51 and in condition for examination;
4. The application must contain three or fewer independent claims and twenty or fewer total claims and the claims must be directed to a single invention.

The application as filed is not eligible for the accelerated examination under 37 C.F.R. § 1.102(d) because it was not complete under 37 CFR 1.51 and in condition for examination at the time of filing. The mailing of a Notice to File Corrected Application Papers on April 7, 2008 is evidence that the application was not complete and in condition for examination at the time of filing.

Note that the policy as published in the Federal Register on June 26, 2006 as outlined on 36326, part VIII, conditions for examination, section (f), conditions for examination include drawings in compliance with 37 CFR 1.84. As the drawings as filed were not in compliance with 37 CFR 1.84 at filing, the application is not considered to be complete under 37 CFR 1.51 and not in condition for examination at the time of filing. Therefore, the application is ineligible for consideration under the accelerated examination program.

For the above-stated reasons, the petition is **DENIED**. The application will therefore be taken up by the examiner for action in its regular turn.

Any inquiry regarding this decision should be directed to Ehud Gartenberg, TC 3700 Special Program Examiner, at (571) 272-4828. In his absence, an inquiry can be directed to Colleen P. Cooke, Special Program Examiner, at 571 272-1170.

Ehud Gartenberg

Ehud Gartenberg
Special Program Examiner
Technology Center 3700

UNITED STATES PATENT AND TRADEMARK OFFICE

Commissioner for Patents
United States Patent and Trademark Office
P.O. Box 1450
Alexandria, VA 22313-1450
www.uspto.gov

McDERMOTT WILL & EMERY LLP
600 13TH Street, N.W.
Washington, DC 20005-3096

In re Application of	: DECISION ON REQUEST TO
Yuzi ZENITANI, et al.	: PARTICIPATE IN PATENT
Application No. 12/056003	: PROSECUTION HIGHWAY
Filed: march 26, 2008	: PILOT PROGRAM AND PETITION
Attorney Docket No. 071025-0033	: TO MAKE SPECIAL UNDER
	: 37 CFR 1.102(d)

This is a decision on the request to participate in the Patent Prosecution Highway (PPH) program and the petition under 37 CFR 1.102(d), filed July 11, 2008 and the preliminary amendment, filed March 26, 2008, to make the above-identified application special.

The request and petition are **GRANTED**.

A grantable request to participate in the PPH pilot program and petition to make special require:

(1) The U.S. application must validly claim priority under 35 U.S.C. 119(a) to one or more applications filed in the JPO, note where the JPO application with similar claims is not the same application from which the U.S. application claims priority that the applicant must identify the relationship between the JPO application with similar claims and the JPO priority application;
(2) Applicant must submit a copy of:
- a. The allowable/patentable claim(s) from the JPO application(s) or if a copy of the allowable/patentable claims is available via the Dossier Access System (DAS) applicant may request the USPTO to obtain a copy from DAS; however, if the USPTO is unable to obtain a copy from the DAS, the applicant will be required to submit a copy;
- b. An English translation of the allowable/patentable claim(s), if applicable; and
- c. A statement that the English translation is accurate, if applicable;

(3) Applicant must:
- a. Ensure all the claims in the U.S. application must sufficiently correspond or be amended to sufficiently correspond to the allowable/patentable claim(s) in the JPO application(s); and
- b. Submit a claims correspondence table in English

(4) Examination of the U.S. application has not begun;
(5) Applicant must submit:
- a. Documentation of prior office action:
  - i. a copy of the office action(s) just prior to the "Decision to Grant a Patent" from each of the JPO application(s) containing the allowable/patentable claims(s) or

ii. if the allowable/patentable claims(s) are from "Notification of Reasons for Refusal" then the Notification of Reasons for Refusal or

iii. if the JPO application is a first action allowance then no office action from the JPO is necessary should be indicated on the request/petition form;

Further, if a copy of the documents from a or b above is available via the Dossier Access System (DAS), applicant may request the USPTO obtain a copy from the SAD; however, if the USPTO is unable to obtain a copy of the DAS, the applicant will be required to submit a copy;

b. An English language translation of the JPO Office action from (5) (a)(i)-(ii) above, if applicable; and

c. A statement that the English translation is accurate;

(6) Applicant must submit:

a. An IDS listing the documents cited by the JPO examiner in the JPO office action (unless already submitted in this application)

b. Copies of documents except U.S. patents or U.S. patent application publications (unless already submitted in this application); and

(7) The required petition fee under 37 CFR 1.17(h).

The request to participate in the PPH pilot program and petition comply with the above requirements. Accordingly, the above-identified application has been accorded "special" status.

Telephone inquiries concerning this decision should be directed to Kathryn Gorgos at 571 272-1012.

All other inquiries concerning the examination or status of the application is accessible in the PAIR system at http://www.uspto.gov/ebc/index.html.

The application is being forwarded to the examiner for action on the merits commensurate with this decision.

Kathryn Gorgos
TQAS TC 1700

UNITED STATES PATENT AND TRADEMARK OFFICE

Commissioner for Patents
United States Patent and Trademark Office
P.O. Box 1450
Alexandria, VA 22313-1450
www.uspto.gov

MCHALE & SLAVIN, P.A.
2855 PGA BLVD
PALM BEACH GARDENS FL 33410

MAILED

APR 10 2009

OFFICE OF PETITIONS

In re Application of	:	
Banning Gray Lary	:	
Application No. 12/056,005	:	DECISION ON PETITION
Filed: March 26, 2008	:	TO MAKE SPECIAL UNDER
Attorney Docket No. 1859.013	:	37 CFR 1.102(c)(1)
	:	

This is a decision on the petition under 37 CFR 1.102(c)(1), filed February 3, 2009, to make the above-identified application special based on applicant's age as set forth in M.P.E.P. § 708.02, Section IV.

The petition is **GRANTED**.

A grantable petition to make an application special under 37 CFR 1.102(c)(1) and MPEP § 708.02, Section IV: Applicant's Age must be accompanied by evidence showing that at least one of the applicants is 65 years of age, or more, such as a birth certificate or a statement by applicant. No fee is required

The instant petition includes a statement from the applicant declaring that he is 65 years of age or older. Accordingly, the above-identified application has been accorded "special" status.

Telephone inquiries concerning this decision should be directed to Terri Williams at 571-272-2991.

All other inquiries concerning either the examination or status of the application should be directed to the Technology Center.

The application is being forwarded to the Technology Center Art Unit 4118 for action on the merits commensurate with this decision.

Terri Williams

Terri Williams
Petitions Examiner
Office of Petitions

- 9 APR 2010

UNITED STATES PATENT AND TRADEMARK OFFICE

Commissioner for Patents
United States Patent and Trademark Office
P.O. Box 1450
Alexandria, VA 22313-1450
www.uspto.gov

Vidas, Arrett & Steinkraus, P.A.
Suite 400, 6640 Shady Oak Road
Eden Prairie, MN 55344

In re Application of GRONHOLZ, Claus Application No.: 12/056,019 Filed: March 26, 2008 Attorney Docket No.: H01.2I-13913-US01 For: DEVICE FOR COMMINUTING A HEAP OF PARTICULATE MATERIAL	:	DECISION ON PETITION

This decision is in response to applicant's "Petition under 37 CFR 1.78 Claiming Benefit of Earlier Filing Date" filed August 03, 2009, requesting acceptance of an unintentionally delayed claim for priority under 35 U.S.C. 365(c) to international application PCT/EP2006/009429.

The petition under 37 CFR 1.78(a)(3) is **DISMISSED** without prejudice.

The present nonprovisional application was filed after November 29, 2000, and the claim herein for the benefit of priority to the prior-filed applications is submitted after expiration of the period specified in 37 CFR 1.78(a)(2)(ii). Therefore, this is a proper petition under 37 CFR 1.78(a)(3).

A petition for acceptance of a claim for late priority under 37 CFR 1.78(a)(3) is only applicable to those applications filed on or after November 29, 2000. Further, the petition is appropriate only after the expiration of the period specified in 37 CFR 1.78(a)(2)(ii). In addition, the petition under 37 CFR 1.78(a)(3) must be accompanied by:

(1) the reference required by 35 U.S.C. § 120 and 37 CFR 1.78(a)(2)(i) of the prior-filed application, unless previously submitted;
(2) the surcharge set forth in § 1.17(t); and
(3) a statement that the entire delay between the date the claim was due under 37 CFR 1.78(a)(2)(ii) and the date the claim was filed was unintentional. The Director may require additional information where there is a question whether the delay was unintentional.

The petition fails to comply with item (1) above. Applicant has not submitted an amended specification or an Application Data Sheet.

The petition fails to comply with item (3) above. Applicant has not stated that "the entire delay between the date the claim was due under 37 CFR 1.78(a)(2)(ii) and the date the claim was filed was unintentional."

It is noted that any intended filing of an international application as a national stage application must clearly and unambiguously be identified as such and must satisfy all of the conditions set forth in 35 U.S.C. 371(c). See 37 CFR 1.495(g):

> The documents and fees submitted . . . must be clearly identified as a submission to enter the national stage under 35 U.S.C. 371, otherwise the submission will be considered as being made under 35 U.S.C. 111.

In addition, section 1893.03(a), page 1800-190 of the MPEP (Eighth edition Rev. 5) states that:

> If there are any conflicting instructions as to whether the filing is under 35 U.S.C. 111(a) or 35 U.S.C. 371, the application will be accepted as filed under 35 U.S.C. 111(a).

During the electronic filing process on March 26, 2008, applicant selected the application identifier "Utility under 35 USC, 111(a)," rather than the separate application identifier specifically applicable to national stage applications filed under 35 U.S.C. 371. This is evident from the Electronic Acknowledgment Receipt generated at the time of filing, which identifies the application as a "Utility under 35 USC 111(a)" application rather than a U.S. national stage application filed under 35 U.S.C. 371. Therefore, the application was properly treated as being filed under 35 U.S.C. 111(a).

Therefore, before the petition under 37 CFR § 1.78(a)(3) can be granted, a renewed petition and either an Application Data Sheet (37 CFR 1.76(a)(5))[1] or a proper amendment (complying with the provisions of 37 CFR 1.121) to correct the above matters are required. Additionally, a statement that the entire delay between the date the claim was due under 37 CFR 1.78(a)(2)(ii) and the date the claim was filed was unintentional is required.

Any questions concerning this matter may be directed to Anthony Smith at (571) 272-3298.

Any further correspondence with respect to this matter may be filed electronically via EFS-Web selecting the document description "Petition for review and processing by the PCT Legal Office" or by mail addressed to Mail Stop PCT, Commissioner for Patents, Office of PCT Legal Administration, P.O. Box 1450, Alexandria, Virginia 22313-1450, with the contents of the letter marked to the attention of the Office of PCT Legal Administration.

Boris Milef
Senior Legal Examiner
Office of PCT Legal Administration

---

[1]Applicant is advised that a supplemental ADS must be labeled as such (see 37 CFR 1.76(c)(2)) and must be signed (see 37 CFR 1.33).

UNITED STATES PATENT AND TRADEMARK OFFICE

1 8 MAY 2010

Commissioner for Patents
United States Patent and Trademark Office
P.O. Box 1450
Alexandria, VA 22313-1450
www.uspto.gov

Vidas, Arrett & Steinkraus, P.A.
Suite 400, 6640 Shady Oak Road
Eden Prairie, MN 55344

In re Application of	:	
GRONHOLZ, Claus	:	
Application No.: 12/056,019	:	
Filed: March 26, 2008	:	DECISION ON PETITION
Attorney Docket No.: H01.2I-13913-US01	:	
For: DEVICE FOR COMMINUTING A HEAP	:	
OF PARTICULATE MATERIAL	:	

This decision is in response to applicant's "Renewed Petition under 37 CFR 1.78 Claiming Benefit of Earlier Filing Date" filed April 30, 2010, requesting acceptance of an unintentionally delayed claim for priority under 35 U.S.C. 365(c) for the benefit of priority to the prior-filed international application (PCT/EP2006/009429) set forth in the application data sheet filed concurrently with the instant petition.

The petition is **GRANTED**.

The present nonprovisional application was filed after November 29, 2000, and the claim herein for the benefit of priority to the prior-filed international application is submitted after expiration of the period specified in 37 CFR 1.78(a)(2)(ii). Therefore, this is a proper petition under 37 CFR 1.78(a)(3).

A petition for acceptance of a claim for late priority under 37 CFR 1.78(a)(3) is only applicable to those application filed on or after November 29, 2000. Further, the petition is appropriate only after the expiration of the period specified in 37 CFR 1.78(a)(2)(ii). In addition, the petition under 37 CFR 1.78(a)(3) must be accompanied by:

(1) the reference required by 35 U.S.C. § 120 and 37 CFR 1.78(a)(2)(i) of the prior-filed application, unless previously submitted;
(2) the surcharge set forth in § 1.17(t); and
(3) a statement that the entire delay between the date the claim was due under 37 CFR 1.78(a)(2)(ii) and the date the claim was filed was unintentional. The Director may require additional information where there is a question whether the delay was unintentional.

The petition complies with the requirements for a grantable petition under 37 CFR

1.78(a)(3) in that (1) a reference to the prior-filed international application has been included in a supplemental ADS filed with present petition, as provided by 37 CFR 1.78(a)(2)(iii); (2) the surcharge fee required by 37 CFR 1.17(t) has been submitted; and (3) the petition contains a proper statement of unintentional delay. Accordingly, having found that the instant petition for acceptance of an unintentionally delayed claim for the benefit of priority under 35 U.S.C. § 120 to the prior-filed international application satisfies the conditions of 37 CFR 1.78(a)(3), the petition is granted.

The granting of the petition to accept the delayed benefit claim to the prior-filed applications under 37 CFR 1.78(a)(3) should not be construed as meaning that this application is entitled to the benefit of the prior-filed application. In order for this application to be entitled to the benefit of the prior-filed application, all other requirements under 35 U.S.C. § 120 and 37 CFR 1.78(a)(1) and (a)(2) must be met. Similarly, the fact that the corrected Filing Receipt accompanying this decision on petition includes the prior-filed application should not be construed as meaning that applicant is entitled to the claim for benefit of priority to the prior-filed application noted thereon. Accordingly, the examiner will, in due course, consider this benefit claim and determine whether this application is entitled to the benefit of the earlier filing date.

A corrected Filing Receipt, which includes the benefit claim to the prior-filed international application, accompanies this decision on petition.

Any inquiries concerning this decision may be directed to Anthony Smith, Attorney Advisor, at (571) 272-3298. All other inquiries concerning either the examination procedures or status of the application should be directed to the Technology Center.

This matter is being referred to Technology Center Art Unit 1717 for consideration by the examiner of applicant's entitlement to claim benefit of priority to the prior-filed international application.

Boris Milef
PCT Legal Examiner
Office of PCT Legal Administration

UNITED STATES PATENT AND TRADEMARK OFFICE

Commissioner for Patents
United States Patent and Trademark Office
P.O. Box 1450
Alexandria, VA 22313-1450
www.uspto.gov

MCHALE & SLAVIN, P.A.
2855 PGA BLVD
PALM BEACH GARDENS FL 33410

MAILED

MAR 16 2009

OFFICE OF PETITIONS

In re Application of :
LARY, Banning G. :
Application No. 12/056,074 : DECISION ON PETITION
Filed: March 26, 2008 : TO MAKE SPECIAL UNDER
Attorney Docket No. **1859.012** : 37 CFR 1.102(c)(1)
:

This is a decision on the petition under 37 CFR 1.102(c)(1), filed February 03, 2009, to make the above-identified application special based on applicant's age as set forth in M.P.E.P. § 708.02, Section IV.

The petition is **GRANTED**.

A grantable petition to make an application special under 37 CFR 1.102(c)(1) and MPEP § 708.02, Section IV: Applicant's Age must be accompanied by evidence showing that at least one of the applicants is 65 years of age, or more, such as a birth certificate or a statement by applicant. No fee is required

The instant petition includes a statement by Banning Lary, attesting to his age. Accordingly, the above-identified application has been accorded "special" status.

Telephone inquiries concerning this decision should be directed to Tredelle Jackson at 571-272-2783.

All other inquiries concerning either the examination or status of the application should be directed to the Technology Center.

The application is being forwarded to the Technology Center Art Unit 3727 for action on the merits commensurate with this decision.

Tredelle D. Jackson
Paralegal Specialist
Office of Petitions

UNITED STATES PATENT AND TRADEMARK OFFICE

Commissioner for Patents
United States Patent and Trademark Office
P.O. Box 1450
Alexandria, VA 22313-1450
www.uspto.gov

Baker & McKenzie, LLP
Patent Department
2001 Ross Avenue
Suite 2300
Dallas, TX 75201

COPY MAILED

AUG 12 2009

OFFICE OF PETITIONS

In re Application of	:	
Michael Pousti et al.	:	
Application No. 12/056,090	:	DECISION ON PETITION
Filed: March 26, 2008	:	TO WITHDRAW
Attorney Docket No. 67175511.001604	:	FROM RECORD
	:	

This is a decision on the Request to Withdraw as attorney or agent of record under 37 C.F.R. § 1.36(b), filed June 29, 2009.

The request is **moot because a revocation of power of attorney has been filed**.

A review of the file record indicates that the power of attorney to Baker & McKenzie, LLP, has been revoked by the assignee of the patent application on July 10, 2009. Accordingly, the request to withdraw under 37 C.F.R. § 1.36(b) is moot.

All future communications from the Office will continue to be directed to the below listed until otherwise notified by applicant.

Telephone inquires concerning this decision should be directed to Kimberly Inabinet at 571-272-4618.

Kimberly Inabinet
Petitions Examiner
Office of Petitions

cc: Procopio, Cory, Hargreaves & Savitch, LLP
530 B Street
Suite 2100
San Diego, CA 92101

UNITED STATES PATENT AND TRADEMARK OFFICE

UNITED STATES DEPARTMENT OF COMMERCE
United States Patent and Trademark Office
Address: COMMISSIONER FOR PATENTS
P.O. Box 1450
Alexandria, Virginia 22313-1450
www.uspto.gov

MCANDREWS HELD & MALLOY, LTD
500 WEST MADISON STREET
SUITE 3400
CHICAGO, IL 60661

Mail Date: 05/11/2010

Applicant	: Thomas K. Reusche	: DECISION ON REQUEST FOR
Patent Number	: 7659493	: RECALCULATION of PATENT
Issue Date	: 02/09/2010	: TERM ADJUSTMENT IN VIEW
Application No	: 12/056,110	: OF WYETH AND NOTICE OF INTENT TO
Filed	: 03/26/2008	: ISSUE CERTIFICATE OF CORRECTION
		:

The Request for Recalculation is **GRANTED** to the extent indicated.

The patent term adjustment has been determined to be **0** days. The USPTO will *sua sponte* issue a certificate of correction reflecting the amount of PTA days determined by the recalculation.

Prior to the issuance of the certificate of correction, the USPTO will afford patentee an opportunity to be heard and request reconsideration. Accordingly, patentee has **one month or thirty (30) days**, whichever is longer, to file a request for reconsideration of this patent term adjustment calculation. See 35 U.S.C. 154(b)(3)(B)(ii) and 37 CFR 1.322(a)(4). No extensions of time will be granted under 37 CFR 1.136.

Patentee should use document code PET.OP if electronically filing a request for reconsideration of this patent term adjustment calculation. The patentee must also include the information required by 37 CFR 1.705(b)(2) and the fee required by 37 CFR 1.18(e). If patentee does not file a timely request for reconsideration of this patent term adjustment calculation including the information required by 37 CFR 1.705(b)(2) and the fee required by 37 CFR 1.18(e), the USPTO will issue a certificate of correction reflecting the PTA determination noted above.

Patentee should be aware that in order to preserve the right to review in the United States District Court for the District of Columbia of the USPTO patent term adjustment determination, patentee must ensure that he or she also take the steps required under 35 U.S.C. 154(b)(4)(A) in a timely manner. Nothing in the request for recalculation should be construed as providing an alternative time frame for commencing a civil action under 35 U.S.C. 154(b)(4)(A).

Any questions concerning this decision should be directed to the Office of Patent Legal Administration at 571-272-7702.

UNITED STATES PATENT AND TRADEMARK OFFICE

Commissioner for Patents
United States Patent and Trademark Office
P.O. Box 1450
Alexandria, VA 22313-1450
www.uspto.gov
DIW Oct-09

GATES & COOPER LLP
HOWARD HUGHES CENTER
6701 CENTER DRIVE WEST, SUITE 1050
LOS ANGELES CA 90045

MAILED

OCT 07 2009

OFFICE OF PETITIONS

In re Application of :
Mezic et al. :
Application Number: 12/056113 :
Filing Date: 03/26/2008 :
Attorney Docket Number: :
30794.224-US-U1 :

ON PETITION

This is a decision in response to the "PETITION UNDER 37 C.F.R. §1.181 TO WITHDRAW THE HOLDING OF ABANDONMENT," filed on March 5, 2009.

This application was held abandoned on June 12, 2008, for failure to submit a timely response to the Notice to File Missing Parts of Nonprovisional Application mailed on April 11, 2008, which set a two (2)-month shortened period for reply. No extensions of the time for reply in accordance with 37 CFR 1.136(a) were obtained. Notice of Abandonment was mailed on December 12, 2008.

Petitioners request that the Office withdraw the holding of abandonment due to non-receipt of the Notice to File Missing Parts of Nonprovisional Application mailed on April 11, 2008. In support of the allegation that the Notice to File Missing Parts of Nonprovisional Application mailed on April 11, 2008 was never received, petitioner has submitted a copy of counsel's docket record and provided a statement by registered patent practitioner George H. Gates stating that he reviewed counsel's records and determined that the Notice to File Missing Parts dated April 11, 2008 was not received by counsel's law firm. A copy of counsel's docket record is attached to and referenced in the practitioner's statement. Counsel states that the docket record attached is the master docket record.

A review of the record indicates no irregularity in the mailing of the Notice to File Missing Parts of Nonprovisional Application mailed on April 11, 2008, and in the absence of any irregularity in the mailing, there is a strong presumption that the Notice to File Missing Parts of Nonprovisional Application mailed on April 11, 2008 was properly mailed to the address of record. This presumption may be overcome by a showing that the Notice to File Missing Parts of Nonprovisional Application mailed on April 11, 2008 was not in fact received.

MPEP 711.03(c) states, in pertinent part:

> In Delgar v. Schulyer, 172 USPQ 513 (D.D.C. 1971), the court decided that the Office should mail a new Notice of Allowance in view of the evidence presented in support of the contention that the applicant's representative did not receive the original Notice of Allowance. Under the reasoning of Delgar, an allegation that an Office action was never received may be considered in a petition to withdraw the holding of abandonment. If adequately supported, the Office may grant the petition to withdraw the holding of abandonment and remail the Office action. That is, the reasoning of Delgar is applicable regardless of whether an application is held abandoned for failure to timely pay the issue fee (35 U.S.C. 151) or for failure to prosecute (35 U.S.C. 133).
>
> To minimize costs and burdens to practitioners and the Office, the Office has modified the showing required to establish nonreceipt of an Office action. The showing required to establish nonreceipt of an Office communication must include a statement from the practitioner describing the system used for recording an Office action received at the correspondence address of record with the USPTO. The statement should establish that the docketing system is sufficiently reliable. It is expected that the record would include, but not be limited to, the application number, attorney docket number, the mail date of the Office action and the due date for the response.
>
> Practitioner must state that the Office action was not received at the correspondence address of record, and that a search of the practitioner's record(s), including any file jacket or the equivalent, and the application contents, indicates that the Office action was not received. A copy of the record(s) used by the practitioner where the non-received Office action would have been entered had it been received is required.
>
> A copy of the practitioner's record(s) required to show non-receipt of the Office action should include the master docket for the firm. That is, if a three month period for reply was set in the nonreceived Office action, a copy of the master docket report showing all

> replies docketed for a date three months from the mail date of the nonreceived Office action must be submitted as documentary proof of nonreceipt of the Office action. If no such master docket exists, the practitioner should so state and provide other evidence such as, but not limited to, the following: the application file jacket; incoming mail log; calendar; reminder system; or the individual docket record for the application in question.
>
> (emphasis added)

Accordingly, there was no abandonment in fact. The Notice of Abandonment is hereby vacated and the holding of abandonment withdrawn.

The petition is **GRANTED.**

Receipt of the declaration and surcharge filed on March 5, 2009, is acknowledged. Accordingly, there is no need to remail the Notice to File Missing Parts of Nonprovisional Application mailed on April 11, 2008. Rather, the application will be referred to the Office of Patent Application Processing for further processing.

Telephone inquiries related to this decision should be directed to the undersigned at 571-272-3231.

D Wood

Douglas I. Wood
Senior Petitions Attorney
Office of Petitions

UNITED STATES PATENT AND TRADEMARK OFFICE

Commissioner for Patents
United States Patent and Trademark Office
P.O. Box 1450
Alexandria, VA 22313-1450
www.uspto.gov

JEFFER, MANGELS, BUTLER & MARMARO, LLP
1900 AVENUE OF THE STARS, 7TH FLOOR
LOS ANGELES CA 90067

COPY MAILED
AUG 01 2008

In re Application of
Sarkar, Richardson, Yamarte, and Johanson
Application No.: 12/056,169
Filed: March 26, 2008
Attorney Docket No: **59652-5006**
For: **SOLID STATE ELECTROCHEMICAL CELL HAVING RETICULATED ELECTRODE MATRIX AND METHOD OF MANUFACTURING THE SAME**

: DECISION ACCORDING
: RULE 47(a) STATUS

This is in response to the petition under 37 CFR 1.47(a), filed July 16, 2008.

The petition is **GRANTED**.

The above-identified application and papers have been reviewed and found in compliance with 37 CFR 1.47(a). This application is hereby accorded Rule 1.47(a) status.

The above-cited application was filed on March 26, 2008, without an executed oath or declaration. Accordingly, a "Notice to File Missing Parts of Nonprovisional Application" (the "Notice") was mailed on April 16, 2008, requiring an executed oath or declaration and a surcharge for the late filing of the oath or declaration, among other items. A petition under 37 CFR 1.47(a) was filed on July 16, 2008, with a request for an extension of time within the first month.

Petitioner has shown that inventor RIchardson has constructively refused or cannot be located to execute the declaration and join the above-identified application The above-identified application and papers have been reviewed and found in compliance with 37 CFR 1.47(a). This application is hereby accorded Rule 1.47(a) status.

As provided in Rule 1.47(c), this Office will forward notice of this application's filing to the non-signing inventors at the addresses given in the petition. Notice of the filing of this application will also be published in the Official Gazette.

This application will be directed to the Office of Patent Application Processing for further processing.

Telephone inquiries concerning this decision should be directed to the undersigned at (571) 272-3222.

Kenya A. McLaughlin
Petitions Attorney
Office of Petitions

UNITED STATES PATENT AND TRADEMARK OFFICE

Commissioner for Patents
United States Patent and Trademark Office
P.O. Box 1450
Alexandria, VA 22313-1450
www.uspto.gov

FITCH EVEN TABIN AND FLANNERY
120 SOUTH LASALLE STREET
SUITE 1600
CHICAGO, IL 60603-3406

COPY MAILED

MAR 05 2009

OFFICE OF PETITIONS

In re Application of	:	
Stephen John HUNTER, et al	:	
Application No. 12/056,191	:	DECISION ON PETITION
Filed: March 26, 2008	:	TO WITHDRAW
Attorney Docket No. 027715-000310US	:	FROM RECORD
	:	

This is a decision on the Request to Withdraw as attorney or agent of record under 37 C.F.R. § 1.36(b), filed January 30, 2009.

The request is **moot** because a revocation of power of attorney has been filed.

A review of the file record indicates that the power of attorney to Fitch, Even, Tabin and Flannery, has been revoked by the assignee of the patent application on February 11, 2009. Accordingly, the request to withdraw under 37 C.F.R. § 1.36(b) is moot.

All future communications from the Office will be directed to the address below until otherwise properly notified by the applicant.

Telephone inquires concerning this decision should be directed to undersigned at 571-272- 6735.

Diane Goodwyn
Petitions Examiner
Office of Petitions

cc: TOWNSEND AND TOWNSEND
AND CREW, LLP
TWO EMBARCADERO CENTER
EIGHTH FLOOR
SAN FRANCISCO, CA 94111-3834

UNITED STATES PATENT AND TRADEMARK OFFICE

Commissioner for Patents
United States Patent and Trademark Office
P.O. Box 1450
Alexandria, VA 22313-1450
www.uspto.gov

MORRISON & FOERSTER LLP
425 MARKET STREET
SAN FRANCISCO CA 94105-2482

COPY MAILED

DEC 3 1 2009

OFFICE OF PETITIONS

In re Application of

David BERGMAN, et *al.*
Application No. 12/056,199
Filed: March 26, 2008
Attorney Docket No. **514862002701**

DECISION ON PETITION TO WITHDRAW FROM RECORD

This is a decision on the Request to Withdraw as attorney or agent of record under 37 C.F.R. § 1.36(b), filed October 30, 2009.

The request is **NOT APPROVED**.

The request to withdraw as attorney/agent of record and change of correspondence address is hereby not accepted. Petitioner has not complied with current USPTO requirements, set forth in 37 CFR 10.40 concerning Request for Withdrawal as Attorney and Change of Correspondence Address.

Petitioner has not properly submitted forwarding correspondence address information for the application.

The Office will only accept correspondence address changes to the most current address information provided for the assignee of the entire interest *who properly became of record under 37 CFR 3.71*, or if no assignee of the entire interest has properly been made of record, the most current address information provided for the first named inventor. 37 CFR 3.71 (c) states:

> ***An assignee becomes of record either in a national patent application or a reexamination proceeding by filing a statement in compliance with § 3.73 (b) that is signed by a party who is authorized to act on behalf of the assignee.***

The Office will also no longer change the correspondence address to that of a new practitioner unless the Request is accompanied by a power of attorney to a new practitioner (e.g., Form PTO/SB/82). All future communications from the Office will be directed to the above-listed address until otherwise properly notified by the applicant or a proper change of correspondence address has been submitted.

Telephone inquiries concerning this decision should be directed to the undersigned at 571-272-7253. All other inquires concerning either the examination or status of the application should be directed to the Technology Center.

/Monica A. Graves/
Petitions Examiner, Office of Petitions

UNITED STATES PATENT AND TRADEMARK OFFICE

Commissioner for Patents
United States Patent and Trademark Office
P.O. Box 1450
Alexandria, VA 22313-1450
www.uspto.gov

MICHAEL BUCHENHORNER PA
8540 SW 83 STREET
SUITE 100
MIAMI FL 33143

COPY MAILED

SEP 03 2008

OFFICE OF PETITIONS

In re Application of	:	
Raghavachari, et al.	:	
Application No. 12/056,233	:	DECISION ON PETITION
Filed: March 26, 2008	:	
Attorney Docket No. YO920030346US2	:	

This is a decision on the petition under 37 CFR 1.57(a), filed April 17, 2008, requesting that the above-identified application be accorded a filing date of March 26, 2008.

The petition under 37 CFR 1.57(a) is **GRANTED**.

The instant application was deposited on March 26, 2008. However, the application omitted a copy of the drawings. Accordingly, on April 11, 2008, the Office of Initial Patent Examination mailed a "Notice of Incomplete Nonprovisional Application", requiring drawings and stating that the filing date would be the date of receipt of the drawings.

In response, petitioner filed drawings and the instant petition under 37 CFR 1.57(a) on April 17, 2008. Petitioner argues that drawings were incorporated by reference pursuant to a priority claim to a parent application no. 10/662,799.

With respect to the practice of incorporation by reference, the Manual of Patent Examining Procedure states:

> For applications filed on or after September 21, 2004, a claim under 35 U.S.C. 120 and 37 CFR 1.78 for benefit of a prior-filed nonprovisional application or international application designating the U.S. that was present on the filing date of the continuation or divisional application is

> considered an incorporation by reference of the prior-filed application as to inadvertently omitted material, subject to the conditions and requirements of 37 CFR 1.57(a). The purpose of 37 CFR 1.57(a) is to provide a safeguard for applicants when all or a portion of the specification and/or drawing(s) is (are) inadvertently omitted from an application.

The section goes on to state:

> For an application filed on or after September 21, 2004, if the material needed for a filing date is completely contained within a prior-filed application to which benefit is claimed, applicant may file a petition under 37 CFR 1.57(a)(3) along with the fee set forth in 37 CFR 1.17(f) and an amendment with the inadvertently omitted material requesting that the amendment be entered and the application be accorded a filing date as of the original date of deposit of the application papers. See 37 CFR 1.57(a)(3) and MPEP § 201.17.[1]

Accordingly, the above identified application is entitled to a filing date of March 26, 2008, in view of the priority claim to the application No. 10/662,799.

The application is being forwarded to the Office of Patent Application Processing (OPAP) for further processing with a filing date of March 26, 2008, using the application papers received in the Office on that date and the 8 drawing sheets supplied on petition filed April 17, 2008. Applicants will receive appropriate notifications regarding the fees owed, if any, and other information in due course from OPAP.[2]

Telephone inquiries specific to this decision should be directed to Petitions Attorney Cliff Congo at (571)272-3207.

Anthony Knight
Supervisor
Office of Petitions

---

[1] MPEP 201.06(c).

[2] It is noted that the drawings submitted April 17, 2008 are not original drawings and should have been labeled as "new sheets" in accordance with 37 CFR 1.121(d). The drawings, however, are accepted in their current format.

UNITED STATES PATENT AND TRADEMARK OFFICE

UNITED STATES DEPARTMENT OF COMMERCE
United States Patent and Trademark Office
Address: COMMISSIONER FOR PATENTS
P.O. Box 1450
Alexandria, Virginia 22313-1450
www.uspto.gov

APPLICATION NO.	FILING DATE	FIRST NAMED INVENTOR	ATTORNEY DOCKET NO.	CONFIRMATION NO.
12/056,266	03/26/2008	Thomas Carl Brigham		9286

7590 04/04/2008

Thomas C. Brigham
72 Warren St.
New York, NY 10007

EXAMINER

ART UNIT	PAPER NUMBER
2872	

MAIL DATE	DELIVERY MODE
04/04/2008	PAPER

Please find below and/or attached an Office communication concerning this application or proceeding.

The time period for reply, if any, is set in the attached communication.

UNITED STATES PATENT AND TRADEMARK OFFICE

Commissioner for Patents
United States Patent and Trademark Office
P.O. Box 1450
Alexandria, VA 22313-1450
www.uspto.gov

042008

THOMAS C. BRIGHAM
72 Warren St.
New York, NY 10007

APR - 4 2008

APR - 4 2008

In re Application of: Thomas Carl Brigham Serial No.: 12/056,266 Filed: March 26, 2008 Title: ENHANCED THREE DIMENSIONAL TELEVISION	DECISION ON PETITION TO MAKE SPECIAL FOR NEW APPLICATION UNDER 37 C.F.R. § 1.102

This is a decision on the petition, filed on March 26, 2008, to make the above-identified application special for accelerated examination procedure in accordance with 37 C.F.R. § 1.102(c)(2).

The petition to make the application special is **DENIED**.

Effective August 25, 2006, the accelerated examination procedure outlined under Manual for Patent Examining Procedure (MPEP) § 708.02.VIII was replaced by the new accelerated examination procedure outlined in MPEP § 708.02(a) and in the Federal Register, vol. 71, No. 122 of June 26, 2006 (71 Fed. Reg. 36323).

To be eligible for accelerated examination in accordance with 37 C.F.R. § 1.102(d) and pursuant to MPEP § 708.02(a), the following conditions are required:

1. the application is not a reissue utility or design application filed under 37 C.F.R. § 1.111(a);
2. the application, the petition and the required fees must be filed electronically using the USPTO's electronic filing system (EFS), or EFS-web; if not filed electronically, a statement asserting that EFS and EFS-web were not available during the normal business hours;
3. the application, at the time of filing, must be complete under 37 C.F.R. § 1.51 and in condition for examination;
4. the application must contain three or fewer independent claims and twenty or fewer total claims and the claims must be directed to a single invention.

MPEP 708.02(a) I (E) states, in part,
"(E) The application must contain three or fewer independent claims and twenty or fewer total claims. The application must also not contain any multiple dependent claims. By filing a petition to make special under the accelerated examination program the applicant is agreeing not to separately argue the patentability of any dependent claim during any appeal in the application...." (emphasis added).

MPEP 708.02(a) VIII (C) outlines the following conditions for examination:
"C. Conditions for Examination
The application must be in condition for examination at the time of filing. This means the application must include the following:
(1) Basic filing fee, search fee, and examination fee, under 37 CFR 1.16 (see MPEP § 607 subsection I);
(2) Application size fee under 37 CFR 1.16(s) (if the specification and drawings exceed 100 sheets of paper) (see MPEP § 607 subsection II);
(3) An executed oath or declaration in compliance with 37 CFR 1.63;
(4) A specification (in compliance with 37 CFR 1.52) containing a description (37 CFR 1.71) and claims in compliance with 37 CFR 1.75..." (emphasis added).

37 CFR 1.75 (c) states, in part,
"(c) One or more claims may be presented in dependent form, referring back to and further limiting another claim or claims in the same application. Any dependent claim which refers to more than one other claim ("multiple dependent claim") shall refer to such other claims in the alternative only. A multiple dependent claim shall not serve as a basis for any other multiple dependent claim..." (emphasis added)

In the instant application, claims 3 through 5 and 8 through 13 are improper multiple dependent claims because each of these claims does not refer to the other claims in the alternative as required under 37 CFR 1.75(c).

In order to be eligible for the accelerated examination program, the application must not contain any multiple dependent claim and must be in condition for examination on filing. The instant application, claims 1 through 5 and 8 through 13, besides being multiple dependent claims, are improper multiple dependent claims. As such, the application does not meet the conditions for special status.

For the above-stated reasons, the application as filed is not eligible for accelerated examination and the petition is denied. The application will therefore be taken up by the examiner for action in its regular turn.

Information about the current accelerated examination procedure may be obtained from the USPTO website at http://www.uspto.gov/web/patents/accelerated/.

Any request for reconsideration of this decision must be submitted within 1 (one) month or 30 (thirty) days, whichever is longer, from the date of this decision in order to be considered timely.

Any inquiry regarding this decision should be directed to Hien H. Phan, Special Program Examiner, at (571) 272-1606.

Hien H. Phan, Quality Assurance Specialist
Technology Center 2800 - Semiconductors,
Electrical & Optical Systems & Components

UNITED STATES PATENT AND TRADEMARK OFFICE

UNITED STATES DEPARTMENT OF COMMERCE
United States Patent and Trademark Office
Address: COMMISSIONER FOR PATENTS
P.O. Box 1450
Alexandria, Virginia 22313-1450
www.uspto.gov

APPLICATION NO.	FILING DATE	FIRST NAMED INVENTOR	ATTORNEY DOCKET NO.	CONFIRMATION NO.
12/056,266	03/26/2008	Thomas Carl Brigham		9286

7590 04/07/2008

Thomas C. Brigham
72 Warren St.
New York, NY 10007

EXAMINER

ART UNIT	PAPER NUMBER
2872	

MAIL DATE	DELIVERY MODE
04/07/2008	PAPER

Please find below and/or attached an Office communication concerning this application or proceeding.

The time period for reply, if any, is set in the attached communication.

UNITED STATES PATENT AND TRADEMARK OFFICE

Commissioner for Patents
United States Patent and Trademark Office
P.O. Box 1450
Alexandria, VA 22313-1450
www.uspto.gov

042008

THOMAS C. BRIGHAM
72 Warren St.
New York, NY 10007

APR - 7 2008

In re Application of:
Thomas Carl Brigham
Serial No.: 12/056,266
Filed: March 26, 2008
Title: ENHANCED THREE DIMENSIONAL TELEVISION

DECISION ON PETITION TO MAKE SPECIAL FOR NEW APPLICATION UNDER 37 C.F.R. § 1.102

This is a decision on the petition, filed on March 26, 2008, to make the above-identified application special for accelerated examination procedure in accordance with 37 C.F.R. § 1.102(c)(2).

The petition to make the application special is **DENIED**.

Effective August 25, 2006, the accelerated examination procedure outlined under Manual for Patent Examining Procedure (MPEP) § 708.02.VIII was replaced by the new accelerated examination procedure outlined in MPEP § 708.02(a) and in the Federal Register, vol. 71, No. 122 of June 26, 2006 (71 Fed. Reg. 36323).

To be eligible for accelerated examination in accordance with 37 C.F.R. § 1.102(d) and pursuant to MPEP § 708.02(a), the following conditions are required:

1. the application is not a reissue utility or design application filed under 37 C.F.R. § 1.111(a);
2. the application, the petition and the required fees must be filed electronically using the USPTO's electronic filing system (EFS), or EFS-web; if not filed electronically, a statement asserting that EFS and EFS-web were not available during the normal business hours;
3. the application, at the time of filing, must be complete under 37 C.F.R. § 1.51 and in condition for examination;
4. the application must contain three or fewer independent claims and twenty or fewer total claims and the claims must be directed to a single invention.

MPEP 708.02(a) I (E) states, in part,
"(E) The application must contain three or fewer independent claims and twenty or fewer total claims. The application must also not contain any multiple dependent claims. By filing a petition to make special under the accelerated examination program the applicant is agreeing not to separately argue the patentability of any dependent claim during any appeal in the application...." (emphasis added).

MPEP 708.02(a) VIII (C) outlines the following conditions for examination:
"C. Conditions for Examination
The application must be in condition for examination at the time of filing. This means the application must include the following:
(1) Basic filing fee, search fee, and examination fee, under 37 CFR 1.16 (see MPEP § 607 subsection I);
(2) Application size fee under 37 CFR 1.16(s) (if the specification and drawings exceed 100 sheets of paper) (see MPEP § 607 subsection II);
(3) An executed oath or declaration in compliance with 37 CFR 1.63;
(4) A specification (in compliance with 37 CFR 1.52) containing a description (37 CFR 1.71) and claims in compliance with 37 CFR 1.75..." (emphasis added).

37 CFR 1.75 (c) states, in part,
"(c) One or more claims may be presented in dependent form, referring back to and further limiting another claim or claims in the same application. Any dependent claim which refers to more than one other claim ("multiple dependent claim") shall refer to such other claims in the alternative only. A multiple dependent claim shall not serve as a basis for any other multiple dependent claim..." (emphasis added)

In the instant application, claims 3 through 5 and 8 through 13 are improper multiple dependent claims because each of these claims does not refer to the other claims in the alternative as required under 37 CFR 1.75(c).

In order to be eligible for the accelerated examination program, the application must not contain any multiple dependent claim and must be in condition for examination on filing. In the instant application, claims 1 through 5 and 8 through 13, besides being multiple dependent claims, are improper multiple dependent claims. As such, the application does not meet the conditions for special status.

For the above-stated reasons, the application as filed is not eligible for accelerated examination and the petition is denied. The application will therefore be taken up by the examiner for action in its regular turn.

Information about the current accelerated examination procedure may be obtained from the USPTO website at http://www.uspto.gov/web/patents/accelerated/.

Any request for reconsideration of this decision must be submitted within 1 (one) month or 30 (thirty) days, whichever is longer, from the date of this decision in order to be considered timely.

Any inquiry regarding this decision should be directed to Hien H. Phan, Special Program Examiner, at (571) 272-1606.

Hien H. Phan, Quality Assurance Specialist
Technology Center 2800 - Semiconductors,
Electrical & Optical Systems & Components

UNITED STATES PATENT AND TRADEMARK OFFICE

Commissioner for Patents
United States Patent and Trademark Office
P.O. Box 1450
Alexandria, VA 22313-1450
www.uspto.gov

ARNOLD & KNOBLOCH, LLP
4900 WOODWAY DR., SUITE 900
HOUSTON TX 77056

MAILED

JUN 22 2010

OFFICE OF PETITIONS

In re Application of
Rodney D. MURRELL
Application No. 12/056,307
Filed: March 27, 2008
Attorney Docket No. M31742US

DECISION ON PETITION
TO WITHDRAW
FROM RECORD

This is a decision on the Request to Withdraw as attorney or agent of record under 37 C.F.R. § 1.36(b), filed May 7, 2010.

The request is **APPROVED**.

A grantable request to withdraw as attorney/agent of record must be signed by every attorney/agent seeking to withdraw or contain a clear indication that one attorney is signing on behalf of another/others. The Office requires the practitioner(s) requesting withdrawal to certify that he, she, or they have: (1) given reasonable notice to the client, prior to the expiration of the response period, that the practitioner(s) intends to withdraw from employment; (2) delivered to the client or a duly authorized representative of the client all papers and property (including funds) to which the client is entitled; and (3) notified the client of any responses that may be due and the time frame within which the client must respond, pursuant 37 CFR 10.40(c).

The request was signed by Charles S. Knobloch on behalf of the attorneys of record associated with Customer No. 28805.

The attorneys of record associated with Customer No. 28805 have been withdrawn.

Applicant is reminded that there is no attorney of record at this time.

The correspondence address of record has been changed and the new correspondence address is the address indicated below until otherwise properly notified by the applicant.

Telephone inquiries concerning this decision should be directed to the undersigned at 571-272-6735.

/dcg/
Diane C. Goodwyn
Petitions Examiner
Office of Petitions

cc: RODNEY MURRELL
P.O. BOX 404
BATSON TX 77519

UNITED STATES PATENT AND TRADEMARK OFFICE

UNITED STATES DEPARTMENT OF COMMERCE
United States Patent and Trademark Office
Address: COMMISSIONER FOR PATENTS
P.O. Box 1450
Alexandria, Virginia 22313-1450
www.uspto.gov

APPLICATION NUMBER	FILING OR 371(C) DATE	FIRST NAMED APPLICANT	ATTY. DOCKET NO./TITLE
12/056,307	03/27/2008	Rodney D. Murrell	M31742US

CONFIRMATION NO. 9348

POWER OF ATTORNEY NOTICE

28805
ARNOLD & KNOBLOCH, L.L.P.
4900 Woodway Dr., Suite 900
HOUSTON, TX 77056

OC000000042218217

Date Mailed: 06/22/2010

NOTICE REGARDING CHANGE OF POWER OF ATTORNEY

This is in response to the Power of Attorney filed 05/07/2010.

- The withdrawal as attorney in this application has been accepted. Future correspondence will be mailed to the new address of record. 37 CFR 1.33.

/dcgoodwyn/

Office of Data Management, Application Assistance Unit (571) 272-4000, or (571) 272-4200, or 1-888-786-0101

UNITED STATES PATENT AND TRADEMARK OFFICE

Commissioner for Patents
United States Patent and Trademark Office
P.O. Box 1450
Alexandria, VA 22313-1450
www.uspto.gov

ABSOLUTE TECHNOLOGY LAW GROUP LLC
135 W. WELLS ST.
SUITE 518
MILWAUKEE WI 53203

COPY MAILED

JAN 04 2010

In re Application of	:	
John Hawkey	:	DECISION ON PETITION
Application No. 12/056,357	:	TO WITHDRAW
Filed: March 27, 2008	:	FROM RECORD
Attorney Docket No. HAWKEY-NONP-0308	:	

This is a decision on the Request to Withdraw as attorney or agent of record under 37 C.F.R. § 1.36(b), filed November 2, 2009.

The request is **APPROVED**.

A grantable request to withdraw as attorney/agent of record must be signed by every attorney/agent seeking to withdraw or contain a clear indication that one attorney is signing on behalf of another/others. The Office will require the practitioner(s) to certify that he, she or they have: (1) given reasonable notice to the client, prior to the expiration of the reply period, which the practitioner(s) intends to withdraw from employment; (2) delivered to the client or a duly authorized representative of the client all papers and property (including funds) to which the client is entitled; and (3) notified the client of any replies that may be due and the time frame within which the client must respond, pursuant to 37 CFR 10.40 (c).

The request was signed by Jill Gilbert Welytok on behalf of all attorneys of record who are associated with Customer No. 57520.

All attorneys/agents associated with Customer Number 57520 have been withdrawn. Applicant is reminded that there is no attorney of record at this time.

All future correspondence will be directed to the applicant at the address indicated below.

Currently, there is an outstanding Office action mailed September 29, 2009 that requires a reply.

Telephone inquires concerning this decision should be directed to the undersigned at (571) 272-7751. All other inquires concerning either the examination or status of the application should be directed to the Technology Center.

Joan Olszewski

Joan Olszewski
Petitions Examiner
Office of Petitions

cc: John Hawkey
P.O. Box 42, S2056 City Road HH
Hillsboro, WI 54634

UNITED STATES PATENT AND TRADEMARK OFFICE

UNITED STATES DEPARTMENT OF COMMERCE
United States Patent and Trademark Office
Address: COMMISSIONER FOR PATENTS
P.O. Box 1450
Alexandria, Virginia 22313-1450
www.uspto.gov

APPLICATION NO.	FILING DATE	FIRST NAMED INVENTOR	ATTORNEY DOCKET NO.	CONFIRMATION NO.
12/056,420	03/27/2008	Michael Boraas	ROC920070679US1	9543

77062 7590 04/29/2008
The Law Firm of Andrea Hence Evans, LLC
14625 Baltimore Ave., #853
Laurel, MD 20707

EXAMINER

ART UNIT	PAPER NUMBER
3677	

MAIL DATE	DELIVERY MODE
04/29/2008	PAPER

Please find below and/or attached an Office communication concerning this application or proceeding.

The time period for reply, if any, is set in the attached communication.

UNITED STATES PATENT AND TRADEMARK OFFICE

UNDER SECRETARY OF COMMERCE FOR INTELLECTUAL PROPERTY AND
DIRECTOR OF THE UNITED STATES PATENT AND TRADEMARK OFFICE
WASHINGTON, DC 20231
www.uspto.gov

MAILED
FROM DIRECTORS OFFICE

APR 28 2008

TECHNOLOGY CENTER 3600

The Law Firm of Andrea Hence Evans, LLC
14625 Baltimore Avenue, #853
Laurel, MD 20707

In re application of
Michael Boraas et al.
Application No. 12/056,420
Filed: March 27, 2008
For: FORCED EXTENSION CASTER ASSEMBLY

DECISION ON PETITION TO MAKE SPECIAL FOR NEW APPLICATION UNDER 37 CFR 1.102

This is a decision on the petition filed on March 27, 2008 to make the above-identified application special for accelerated examination procedure under 37 C.F.R. § 1.102(d).

The petition to make the application special is **DISMISSED.**

REGULATION AND PRACTICE

A grantable petition to make special under 37 C.F.R. § 1.102(d) and pursuant to the "Change to Practice for Petitions in Patent Applications to Make Special and for Accelerated Examination" published in the Federal Register on June 26, 2006 (71 Fed. Reg. 36323), must satisfy the following conditions:

I. Conditions Regarding the Application:

1. the application must be a non-reissue utility or design application filed under 37 CFR 1.111(a);

2. the application, the petition and the required fees must be filed electronically using the USPTO's electronic filing system (EFS), or EFS-web; if not filed electronically, a statement asserting that EFS and EFS-web were not available during the normal business hours;

3. at the time of filing, the application must be complete under 37 CFR 1.51 and in condition for examination;

4. the application must contain three or fewer independent claims and twenty or fewer total claims and the claims must be directed to a single invention.

II. Conditions Regarding the Petition:

The petition must:

1. be filed with the application;

2. include a statement that applicant agrees not to separately argue the patentability of any independent claim during any appeal in the application;

3. include a statement that applicant agrees to make an election without traverse in a telephone interview;

4. include a statement that applicant agrees to conduct such an interview when requested by the examiner;

5. include a statement, made based on a good faith belief, that a preexamination search in compliance with the following requirements, was conducted, including an identification of the field of search by United States class and subclass, where applicable, and for database searches, the search logic or chemical structure or sequence used as a query, the name of the file(s) searched and the database service, and the date of the search.

The preexamination search must:

5.1 involve U.S. patents and patent application publications, foreign patent documents, and non-patent literature, unless the applicant can justify with reasonable certainty that no references more pertinent than those already identified are likely to be found in the eliminated sources and includes such a justification with this statement;

5.2. be directed to the claimed invention and encompass all of the features of the claims, giving the claims the broadest reasonable expectation;

5.3. encompass the disclosed features that may be claimed.

6. must provide in support of the petition an accelerated examination support document.

An accelerated examination support document must include:

6.1. an information disclosure statement (IDS) in compliance with 37 CFR 1.98 citing each reference deemed most closely related to the subject matter of each of the claims;

6.2. an identification of all the limitations in the claims that are disclosed by the reference specifying where the limitation is disclosed in the cited reference;

6.3. a detailed explanation of how each of the claims are patentable over the references cited with particularity required by 37 CFR 1.111(b) and (c);

6.4. a concise statement of the utility of the invention as defined in each of the independent claims (unless the application is a design application);

6.5. a showing of where each limitation of the claims finds support under 35 USC 112, first paragraph, in the written description of the specification. If applicable, the showing must also identify: (1) each means- (or step) plus-function claim element that invokes consideration under 35 UDC 112, sixth paragraph; and (2) the structure, material, or acts in the specification that corresponds to each means- (or step) plus-function claim element that invokes consideration under 35 UDC 112, sixth paragraph; if the application claims the benefit of one or more applications

under title 35, United States Code, the showing must also include where each limitation of the claims finds support under 35 USC 112, first paragraph, in each such application in which such supports exists;

6.6. an identification of any cited references that may be disqualified under 35 USC 103(c).

REVIEW OF FACTS

The petition fails to comply with conditions II.5.2 above.

As to condition II.5.2, the petition lacks an indication of a preexamination search that encompasses all of the features of the claims. Specifically, with respect to the classification search, in addition to the areas already searched, the search needs to include a search of class 280 (which is the class where the application will be classified), subclasses 47.34, 47.35, 79.11, 79.3, 79.4 and 763.1. In addition, class 301, subclass 128 is a required area for search of the claimed invention as it pertains to laterally extensible axle structures. Any renewed petition must expand the search to encompass the above areas.

With respect to the text search of the US Patents database, the search logic in the petition is deemed inadequate. The truncation used is too short and applicant's choice of proximity indicators is too limiting. For example, instead of the proximity operator "adj" and "near" used in the search query, applicant should expand the search by using the proximity operator "near". Furthermore, it appears that applicant did not search plurals. The search logic also lack synonyms that would deem to be required in the art. A sample search logic to be used in this application is provided below:

L1	(caster$3 or wheel$2 or roller) same (arm or bar or rod or exten$5 or outrigger)
L2	(hole or slot or aperture or key$3 or slid$4) same (arm or bar or rod or exten$5 or outrigger)
L3	((server or computer or equipment) same (rack or shelf or shelv$2 or shelving or support$3)) or (cart or trolley or trolleys or platform or dolly or dollies)
L4	(lateral$2 or sideways or horizontal$2) same (arm or bar or rod or exten$5 or outrigger)

This sample search logic is not meant to be the sole search logic that can or should be employed in this application, but is meant solely as an example of a starting point for applicant's assistance.

Furthermore, it is noted that applicant has indicated in the classification search that all the subclasses in classes 16 and 248 were searched. It is also noted that in the text search logic at L3 and L29, there is an indication that these classes were searched in combination with several keywords. There are over 2,900 patents combined in classes 16 and 248 in the files of the USPTO EAST database indicated by applicant. It is request that applicant clarify whether applicant reviewed all 2,900+ patents or only those that were searched in combination with the keywords in L1 and L2 of the search

logic. If applicant merely limited the classification search to those with the keyword search, then the classification search is incorrect, as applicant did not review the more than 2,900 entries contained in classes 16 and 248.

Additionally, given the scope of the claimed subject matter, the finding of only a single patent is an indication that the evaluation of the search results fails to be directed to, and encompass all of the features of, the claims, given the claims **the broadest reasonable interpretation**, as required.

As to condition II.6.2, while the manner in which the applicant has provided an explanation clearly specifying whether each of the limitations (or portions thereof) are disclosed in each of the references (and the locations thereof) is technically adequate, given the above deficiencies noted in the search and search results, similar detail will be needed for any additional art uncovered.

As to condition to II.6.5, the showing of where each limitation of the claim finds support under 35 USC 112 in the written description of the application is insufficient. For each claimed limitation the petition needs to identify specific passages, or at least a single paragraph where each limitation is supported. Applicant has referenced the complete disclosure (i.e., pages 2-7 and Figures 1-6) as support. Listing broadly paragraphs or figures, without specifically pointing out which limitation is supported in a particular paragraph, does not comply with what is required.

Therefore, the petition fails to meet the required conditions to be accorded special status under the accelerated examination procedure.

DECISION

For the above-stated reasons, the petition is **DISMISSED**. The application will therefore be taken up by the examiner for action in its regular turn.

Petitioner is given a single opportunity to perfect the petition. Any request for reconsideration of this decision must be submitted within 1 (one) month or 30 (thirty) days, whichever is longer, (no extension of time under 37 CFR 1.136(a)) from the date of this decision in order to be considered timely. Any request for reconsideration must address the deficiencies indicated above.

Petitioner is reminded that, upon granting of the special status of the application on request for reconsideration, the application will be processed expeditiously. However, due to the dismissal of the instant petition, examination may not be completed within twelve months of the filing date of the application.

Any inquiry regarding this decision should be directed to Teri P. Luu, Quality Assurance Specialist, at (571) 272-7045.

Teri P. Luu
Quality Assurance Specialist
Technology Center 3600

TL/tl: 4/2308

UNITED STATES PATENT AND TRADEMARK OFFICE

UNITED STATES DEPARTMENT OF COMMERCE
United States Patent and Trademark Office
Address: COMMISSIONER FOR PATENTS
P.O. Box 1450
Alexandria, Virginia 22313-1450
www.uspto.gov

APPLICATION NO.	FILING DATE	FIRST NAMED INVENTOR	ATTORNEY DOCKET NO.	CONFIRMATION NO.
12/056,420	03/27/2008	Michael Boraas	ROC920070679US1	9543

77062 7590 07/07/2008
The Law Firm of Andrea Hence Evans, LLC
14625 Baltimore Ave., #853
Laurel, MD 20707

EXAMINER

ART UNIT	PAPER NUMBER
3677	

MAIL DATE	DELIVERY MODE
07/07/2008	PAPER

Please find below and/or attached an Office communication concerning this application or proceeding.

The time period for reply, if any, is set in the attached communication.

UNITED STATES PATENT AND TRADEMARK OFFICE

Commissioner for Patents
United States Patent and Trademark Office
P.O. Box 1450
Alexandria, VA 22313-1450
www.uspto.gov

MAILED
FROM DIRECTORS OFFICE

JUL 0 3 2008

TECHNOLOGY CENTER 3600

The Law Firm of Andrea Hence Evans, LLC
14625 Baltimore Avenue, #853
Laurel, MD 20707

In re application of
Michael Boraas et al.
Application No. 12/056,420
Filed: March 27, 2008
For: FORCED EXTENSION CASTER ASSEMBLY

DECISION ON PETITION TO MAKE SPECIAL FOR NEW APPLICATION UNDER 37 CFR 1.102

This is a decision on the renewed petition filed on May 27, 2008 to make the above-identified application special for accelerated examination procedure under 37 C.F.R. § 1.102(d).

The petition to make the application special is **GRANTED**.

The application is eligible for accelerated examination and the petition complies with the conditions for granting the application special status pursuant to the "Change to Practice for Petitions in Patent Applications to Make Special and for Accelerated Examination" published June 26, 2006, in the Federal Register. (71 Fed. Reg. 36323).

The prosecution of the instant application will be conducted expeditiously according to the following guidelines.

1. The application will be docketed to an examiner and taken up for action within two weeks of the date of this decision.

2. Restriction Practice:
If the examiner determines that the claims are not directed to a single invention, a telephone request to elect one single invention will be made pursuant to MPEP 812.01. As a prerequisite to the grant of this petition, the applicant has agreed to make an oral election, by telephone, without traverse. If the applicant refuses to make an election without traverse, or the examiner cannot reach the applicant after a reasonable effort, the examiner will treat the first claimed invention (invention defined by claim 1) as having being constructively elected without traverse for examination.

3. Office action:
If it is determined that, after appropriate consultation, there is a potential rejection or any other issue to be addressed, the examiner will telephone the applicant and

arrange an interview to discuss and resolve the issue. An Office action, other than a Notice of Allowance and Fee(s) Due (Notice of Allowance), will not be issued unless either: 1) an interview was conducted but did not result in agreed to action that places the application in condition for allowance, or, 2) a determination is made that an interview would be unlikely to result in the application being placed in condition for allowance, and 3) an internal conference has been held to review any rejection of any claim.

4. Time for Reply:
An Office action other than a Notice of Allowance or a final Office action will set a shortened statutory period of one month or thirty days, whichever is longer, for reply with no extension of time available under 37 CFR 1.136(a). Failure to timely file a reply within this non-extendible period for reply will result in the abandonment of the application.

5. Reply by Applicant:
A timely reply to an Office action other than the Notice of Allowance must be submitted electronically via EFS or EFS-web and limited to addressing the rejections, objections and requirement made. Any amendment that attempts to: 1) add claims which would result in more than three pending independent claims or more than twenty pending total claims; 2) present claims not encompassed by the pre-examination search or an updated accelerated examination support document; or 3) present claims that are directed to a non-elected invention or an invention other than that previously claimed and examined in the application, will be treated as not fully responsive and will not be entered.

   For any amendment to the claims (including any new claim) that is not encompassed by the accelerated examination support document, applicant must provide an updated accelerated examination support document that encompasses the amended or new claims at the time of filing of the amendment.

   To proceed expeditiously with the examination, it is recommended that a reply with amendments made to any claim or with any new claim being added be accompanied by an updated accelerated examination support document or a statement explaining how the amended or new claim is supported by the original accelerated examination support document.

6. Information Disclosure Statement (IDS):
Any IDS filed during prosecution must be submitted electronically via EFS or EFS-web, accompanied by an updated accelerated examination support document, and be in compliance with 37 CFR 1.97 and 1.98.

7. Post-Allowance Processing:
To expedite processing of the allowed application into a patent, the applicant must: 1) pay the required fees within one month of the date of the Notice of Allowance, and 2) not file any post allowance papers not required by the Office. In no event

may the issue fee be paid and accepted later than three months from the date of the Notice of Allowance.

8. After-Final and Appeal Procedures:
To expedite prosecution, after receiving the final Office action, applicant must: 1) promptly file a notice of appeal, an appeal brief and appeal fees; and 2) not request a pre-appeal brief conference.

   Any amendment, affidavit or other evidence filed after final Office action must comply with applicable rules and the requirements outlined in numbered paragraphs 5 and 6 above.

   On appeal, the application will proceed according to normal appeal procedures. After appeal, the application will again be treated special.

9. Proceedings Outside the Normal Examination Process:
If the application becomes involved in a proceeding that is outside the normal examination process (e.g., a secrecy order, national security review, interference proceeding, petitions under 37 CFR 1.181, 182 or 183), the application will be treated special before and after such proceeding.

10. Final Disposition:
The twelve month goal of this accelerated examination procedure ends with a final disposition. The mailing of a final Office action, a Notice of Allowance, the filing of a Notice of Appeal, or the filing of a Request for Continued Examination (RCE) is the final disposition.

If, during prosecution, a paper is not filed electronically using EFS-web, a reply is filed but is not fully responsive, the application is involved in an appeal, or a proceeding outside normal examination process, the application will still be examined expeditiously, however, the final disposition may occur more than twelve months from the filing of the application.

Any inquiry regarding this decision should be directed to Teri P. Luu, Quality Assurance Specialist, at (571) 272-7045.

Teri P. Luu
Quality Assurance Specialist
Technology Center 3600

TL/tl: 07/02/08

UNITED STATES PATENT AND TRADEMARK OFFICE

Commissioner for Patents
United States Patent and Trademark Office
P.O. Box 1450
Alexandria, VA 22313-1450
www.uspto.gov

DEC 16 2009

JONDLE & ASSOCIATES P.C.
858 HAPPY CANYON ROAD SUITE 230
CASTLE ROCK CO 80108

In re Application of:	:
William H. Eby	:
Serial No.: 12/056,444	: PETITION DECISION
Filed: March 27, 2008	:
Attorney Docket No.: **1421-329**	

This is in response to the petition under 37 CFR § 1.59(b), filed July 30, 2009, to expunge information from the above identified application. This application has not been allowed.

Petitioner requests that the Reply to Request for Information under 37 CFR 1.105, and attachment thereto, submitted to the Patent Office on July 30, 2009, be expunged from the record. Petitioner states either: (A) that the information contains trade secret material, proprietary material and/or material that is subject to a protective order which has not been made public; or (B) that the information submitted was unintentionally submitted and the failure to obtain its return would cause irreparable harm to the party who submitted the information or to the party in interest on whose behalf the information was submitted, and the information has not otherwise been made public. The petition fee set forth in 37 CFR § 1.17(g) has been paid.

This is an examined application which is currently under non-final rejection. As such the information provided has been reviewed, in part, but proceedings in the application have not been terminated. As stated in M.P.E.P. 724, upon allowance or other action closing prosecution in an application, petition may be made for return of Proprietary information. The information cannot be expunged at this time.

The petition is **DISMISSED**. Petitioner may resubmit the petition subsequent to a Notice of Allowability or *ex parte Quayle* action being mailed in the application. No additional petition fee will be required at that time.

Should there be any questions about this decision please contact Marianne C. Seidel by letter addressed to Director, TC 1600, at the address listed above, or by telephone at 571-272-0584 or by facsimile sent to the general Office facsimile number, 703-872-9306.

Marianne C. Seidel
Quality Assurance Specialist
Technology Center 1600

SPE RESPONSE FOR CERTIFICATE OF CORRECTION

PAPER NO.:

DATE : 4/16/10

TO SPE OF : ART UNIT: 1797 ATTN: CHARLES E. COOLEY

SUBJECT : Request for Certificate of Correction for Appl. No.: 12/056518 Patent No.: 7607817

Please respond to this request for a certificate of correction within 7 days.

FOR IFW FILES:

Please review the requested changes/corrections as shown in the **COCIN** document(s) in the IFW application image. No new matter should be introduced, nor should the scope or meaning of the claims be changed.

Please complete the response (see below) and forward the completed response to scanning using document code **COCX**.

FOR PAPER FILES:

Please review the requested changes/corrections as shown in the attached certificate of correction. Please complete this form (see below) and forward it with the file to:

Certificates of Correction Branch (CofC)
Randolph Square Building (RSQ)
2800 South Randolph Street, Suite 9XXXX
Arlington, VA 22206
PALM Location 7580

Tasneem Siddiqui

Certificates of Correction Branch
703-756-1593

Thank You for Your Assistance

The request for issuing the above-identified correction(s) is hereby:
Note your decision on the appropriate box.

- ☐ **Approved** — **All** changes apply.
- ☐ **Approved in Part** — Specify below which changes **do not** apply.
- ☐ **Denied** — State the reasons for denial below.

Comments: _____

_____

_____

_____

_____

_____ **SPE** _____ **Art Unit**

PTO/SB/44 (09-07)
Approved for use through 08/31/2010. OMB 0651-0033
U.S. Patent and Trademark Office; U.S. DEPARTMENT OF COMMERCE
Under the Paperwork Reduction Act of 1995, no persons are required to respond to a collection of information unless it displays a valid OMB control number.
(Also Form PTO-1050)

UNITED STATES PATENT AND TRADEMARK OFFICE
CERTIFICATE OF CORRECTION

PATENT NO. : 7,607,817
APPLICATION NO.: 12/056,518
ISSUE DATE Oct. 27, 2009
INVENTOR(S) Hans-Joachim Samann et al

It is certified that an error appears or errors appear in the above-identified patent and that said Letters Patent is hereby corrected as shown below:

Title page add: (30) Foreign Application Priority Data
Apr. 7, 2007 (EP)...07 007 281.4

MAILING ADDRESS OF SENDER (Please do not use customer number below):
James B. Conte
Husch Blackwell Sanders Welsh & Katz
120 South Riverside Plaza, Suite 2200; Chicago, IL 60606

This collection of information is required by 37 CFR 1.322, 1.323, and 1.324. The information is required to obtain or retain a benefit by the public which is to file (and by the USPTO to process) an application. Confidentiality is governed by 35 U.S.C. 122 and 37 CFR 1.14. This collection is estimated to take 1.0 hour to complete, including gathering, preparing, and submitting the completed application form to the USPTO. Time will vary depending upon the individual case. Any comments on the amount of time you require to complete this form and/or suggestions for reducing this burden, should be sent to the Chief Information Officer, U.S. Patent and Trademark Office, U.S. Department of Commerce, P.O. Box 1450, Alexandria, VA 223 13-1450. DO NOT SEND FEES OR COMPLETED FORMS TO THIS ADDRESS. SEND TO: Attention Certificate of Corrections Branch, Commissioner for Patents, P.O. Box 1450, Alexandria, VA22313-1450.

If you need assistance in completing the form, call 1-800-PTO-9199 and select option 2.

UNITED STATES PATENT AND TRADEMARK OFFICE

UNITED STATES DEPARTMENT OF COMMERCE
United States Patent and Trademark Office
Address: COMMISSIONER FOR PATENTS
P.O. Box 1450
Alexandria, Virginia 22313-1450
www.uspto.gov

APPLICATION NO.	FILING DATE	FIRST NAMED INVENTOR	ATTORNEY DOCKET NO.	CONFIRMATION NO.
12/056,520	03/27/2008	William R. Reams	P2008-01-0011 (190057/US)	9700

71089 7590 06/01/2010
DORSEY & WHITNEY LLP
on behalf of EchoStar Technologies, L.L.C.
370 Seventeenth St.
Suite 4700
Denver, CO 80202-5647

EXAMINER
LEE, THOMAS C

ART UNIT	PAPER NUMBER
2115	

NOTIFICATION DATE	DELIVERY MODE
06/01/2010	ELECTRONIC

Please find below and/or attached an Office communication concerning this application or proceeding.

The time period for reply, if any, is set in the attached communication.

Notice of the Office communication was sent electronically on above-indicated "Notification Date" to the following e-mail address(es):

docketing-dv@dorsey.com
docketingdv@dorsey.foundationip.com

UNITED STATES PATENT AND TRADEMARK OFFICE

Commissioner for Patents
United States Patent and Trademark Office
P.O. Box 1450
Alexandria, VA 22313-1450
www.uspto.gov

Dorsey & Whitney LLP
370 Seventeenth St., Suite 4700
Denver, CO 80202-5647

In re Application of: Reams W.
Application No. 12/056,520
Filed: March 12, 2009
For: Systems and methods for controlling the power state of remote control electronics.

DECISION ON REQUEST TO PARTICIPATE IN PATENT PROSECUTION HIGHWAY PILOT PROGRAM AND PETITION TO MAKE SPECIAL UNDER 37 CFR 1.102(d)

This is a decision on the request to participate in the PCT-Patent Prosecution Highway (PPH) pilot program and the petition under 37 CFR 1.102(d), filed March 12, 2010 to make the above-identified application special.

The request and petition are GRANTED.

A grantable request to participate in the PPH program and petition to make special require:

(1) The U.S. application is
(a) a national stage entry of the corresponding PCT application

Or

(b) a national application which forms the basis for the priority claim in the corresponding PCT application

Or

(c) *a* national stage entry of another PCT application (which can be filed in any competent receiving office) which claims priority to the corresponding PCT application

Or

(d) a national application claiming foreign domestic priority to the corresponding PCT application.
Applications subject to a secrecy order (35U.S.C.181) are excluded and not subject to participation in the PCT-PPH pilot program.

Or

(e) a continuing application (continuation, divisional, or continuation-in-part) of the U.S. application which satisfies one of the above (a) to (d) scenarios.

(2) The latest work product in the international phase of the PCT application corresponding to the U.S. application, namely the WO/ISA, or the WO/IPEA, or the IPER, indicates at least one claim in the PCT application has novelty, inventive step and industrial applicability. In case any observation is described in Box VIII of the WO/ISA, or the WO/IPEA, or the IPER which forms the basis for the PCT-PPH request, applicant must identify and explain why the claim(s) is/are not subject to any observation described in Box VIII irrespective of whether an amendment is submitted to correct the observation described in Box VIII. The U.S. application will not be eligible to participate in the PCT-PPH pilot program if applicant does not identify and explain why the claim(s) is/are not subject to the observation described in Box VIII.

Applicant may file a request to participate in the PCT-PPH pilot program on the basis of an International Search Report (ISR) only.

(3) Applicant must:

a. Ensure all the claims in the U.S. application sufficiently correspond or be amended to sufficiently correspond to one or more of those claims indicated as having novelty, inventive step and industrial applicability and free of any observation described in Box VIII in the latest work product of the corresponding PCT application and

b. Submit a claims correspondence table in English;

(4) Substantive Examination of the U.S. application has not begun;

(5) Applicant must submit a copy of:

a. the latest international work product, WO/ISA, or WO/IPEA or PER, which indicated that the claim(s) has/have novelty, inventive step and industrial applicability along with an English translation thereof if the copy of the latest international work product is not in the English language, unless the U.S. application and the corresponding PCT application satisfy the relationship noted in (1)(a) above.

(6) Applicant must submit a copy of:

a. the claims from the corresponding PCT application which were indicated as having novelty, inventive step and industrial applicability in the latest work product of the PCT application,
b. an English translation of the claims and
c. a statement that the English translation is accurate.

If the claims in the U.S. application are identical to the claims from the corresponding PCT application, and are in the English language, applicant may just indicate such in the PCT-PPH request and it will not be necessary for applicant to submit a copy of the claims from the corresponding PCT application.

(7) Applicant must submit:

a. An IDS listing the documents cited in the work products in the international phase of the PCT application corresponding to the U.S. application, namely the WO/ISA, or the WO/IPEA, or the IPER,(unless already submitted in this application)

b. Copies of the documents except U.S. patents or U.S. patent application publications (unless already submitted in this application);

(7) The required petition fee under 37 CFR 1.17(h).

The request to participate in the PPH pilot program and petition are found to comply with the above requirements. Accordingly, the above-identified application has been accorded "special" status.

Telephone inquiries concerning this decision should be directed to Mano Padmanabhan at 571-272-4210.

All other inquiries concerning the examination or status of the application is accessible in the PAIR system at http://www.uspto.gov/ebc/index.html.

The application is being forwarded to the examiner for action on the merits commensurate with this decision.

/Mano Padmanabhan/

Mano Padmanabhan
Quality Assurance Specialist, Technology Center 2100, Workgroup 2180
571-272-4210

Best Available Copy

UNITED STATES PATENT AND TRADEMARK OFFICE

Commissioner for Patents
United States Patent and Trademark Office
P.O. Box 1450
Alexandria, VA 22313-1450
www.uspto.gov

Conley Rose, P.C
P.O. Box 3267
Houston TX 77253-3267

COPY MAILED
SEP 15 2008
OFFICE OF PETITIONS

In re Application of De lucia et al. Application No. 12/056,551 Filed: March 27, 2008 Attorney Docket No. 2725-43201	DECISION REFUSING STATUS UNDER 37 CFR 1.47(a)

This is in response to the petition under 37 CFR 1.47(b), filed July 15, 2008. This petition is properly treated as a petition under 37 CFR 1.47(a)

The petition is **DISMISSED**.

Rule 47 applicant is given TWO (2) MONTHS from the mailing date of this decision to reply, correcting the below-noted deficiencies. Any reply should be entitled "Request for Reconsideration of Petition Under 37 CFR 1.47(a)," and should only address the deficiencies noted below, except that the reply may include an oath or declaration executed by the non-signing inventor. **FAILURE TO RESPOND WILL RESULT IN ABANDONMENT OF THE APPLICATION.** Any extensions of time will be governed by 37 CFR 1.136(a).

A grantable petition under 37 CFR 1.47(a) requires: (1) proof that the non-signing inventor cannot be reached or refuses to sign the oath or declaration after having been presented with the application papers (specification, claims and drawings); (2) an acceptable oath or declaration in compliance with 35 U.S.C. §§ 115 and 116; (3) the petition fee; and (4) a statement of the last known address of the non-signing inventor. Applicant lacks items (1) and (2) set forth above.

Pursuant to petitioner's request deposit account no. 13-0265 will be charged the $70.00 petition fee.

As to item (1), rule 47 applicant must demonstrate with documented evidence that an inventor refuses to join in the application after having been presented with the application papers (specification, claims, drawings and oath or declaration). A review of the evidence presented shows the Lone Star Overnight Air bill was delivered on April 9, 2008. However, it is not evident who received the package, as the delivery signature appears to be in code. If the inventor did not receive the application papers, his conduct cannot be construed as refusal. If the joint inventor was not presented with a copy of the application papers for this application, then the joint inventors could not attest that they have "reviewed and understand the application papers" and could not execute the declaration they were requested to sign. On renewed petition, petitioner should submit information to establish who signed for the application papers.

Petitioner may wish to establish that the non-signing inventor still receives mail at 11415 Lakewood Estates.

As to item (2), an inventor may not authorize another individual to act as his or her agent to sign the application oath or declaration on his or her behalf. Staeger v. Commissioner, 189 USPQ 272 (D.D.C. 1976), In re Striker, 182 USPQ 507 (Comm'r Pat. 1973). In addition to including the non-signing inventor's information, the granting of 47 status requires a rule 47 (b) applicant to make the oath required by 37 CFR §1.63 and §1.64.

The declaration which has been executed by Derek V. Frorinash on behalf of inventor DeLucia is not acceptable because Mr. Frorinash is not an appropriate party to execute a declaration under 37 CFR 1.47 (a).[1] 37 CFR § 1.47(a) and 35 U.S.C. 116, second paragraph, require all available joint inventors to file an application "on behalf of" themselves and on behalf of a joint inventor who "cannot be found or reached after diligent effort" or who refuses to "join in an application."

Under 37 CFR 1.47(a), an oath or declaration signed by all the available joint inventors with the signature block of the nonsigning inventor(s) left blank may be treated as having been signed by all the available joint inventors on behalf of the nonsigning inventor(s), unless otherwise indicated. MPEP 409.03(a).

It should be noted even if the page executed by Frorinash is removed, there would be an appearance that there are five pages of declaration rather than four.

Further correspondence with respect to this matter should be addressed as follows:

By Mail: Mail Stop PETITION
Commissioner for Patents
Post Office Box 1450
Alexandria, VA 22313-1450

By Hand: U. S. Patent and Trademark Office
Customer Window, Mail Stop PETITIONS
401 Dulany Street
Alexandria, VA 22314

The centralized facsimile number is **(571) 273-8300.**

Telephone inquiries should be directed to the undersigned at (571) 272-3215.

Charlema Grant

Charlema Grant
Petitions Attorney
Office of Petitions

---

[1] Where all inventors have refused to execute an application or can not be located it is appropriate for an assignee or his representative to execute the application papers and provide a declaration. See 37 CFR 1.47 (b).

UNITED STATES PATENT AND TRADEMARK OFFICE

Commissioner for Patents
United States Patent and Trademark Office
P.O. Box 1450
Alexandria, VA 22313-1450
www.uspto.gov

COPY MAILED

DEC 1 5 2008

OFFICE OF PETITIONS

Conley Rose, P.C
P.O. Box 3267
Houston TX 77253-3267

In re Application of
Frank Delucia, Charles Butterfield, Harsh Chowhary, Akindele Olufowoshe and William Parker
Application No. 12/056,551
Filed: March 27, 2008
Attorney Docket No. 2725-43201

DECISION GRANTING STATUS UNDER 37 CFR 1.47(a)

This is in response to the petition under 37 CFR 1.47(a), filed October 29, 2008.

The petition is **GRANTED.**

Petitioner has shown that the non-signing inventor DeLucia has refused to join in the filing of the above-identified application.

The application and papers have been reviewed and found in compliance with 37 CFR 1.47(a). This application is hereby accorded Rule 1.47(a) status.

As provided in 37 CFR 1.47(c), this Office will forward notice of this application's filing to the non-signing inventor at the address given in the petition. Notice of the filing of this application will also be published in the Official Gazette.

This application is being referred to the Office of Patent Application Processing for pre-examination processing.

Telephone inquiries regarding this decision should be directed to the undersigned at (571) 272-3215.

Charlema Grant
Petitions Attorney
Office of Petitions

UNITED STATES PATENT AND TRADEMARK OFFICE

Commissioner for Patents
United States Patent and Trademark Office
P.O. Box 1450
Alexandria, VA 22313-1450
www.uspto.gov

Frank V. DeLucia
11415 Lakewood Estates
Houston, Texas 77070

In re Application of
Frank Delucia, Charles Butterfield, Harsh Chowhary, Akindele Olufowoshe and William Parker
Application No. 12/056,551
Filed: March 27, 2008
Attorney Docket No. 2725-43201

COPY MAILED
DEC 15 2008
OFFICE OF PETITIONS

Dear Mr. DeLucia:

You are named as a joint inventor in the above-identified United States patent application, filed under the provisions of 35 U.S.C. 116 (United States Code), and 37 CFR 1.47(a), Rules of Practice in Patent Cases. Should a patent be granted on the application you will be designated therein as a joint inventor.

As a named inventor you are entitled to inspect any paper in the file wrapper of the application, order copies of all or any part thereof (at a prepaid cost per 37 CFR 1.19) or make your position of record in the application. Alternatively, you may arrange to do any of the preceding through a registered patent attorney or agent presenting written authorization from you. If you care to join the application, counsel of record (see below) would presumably assist you. Joining the application would entail the filing of an appropriate oath or declaration by you pursuant to 37 CFR 1.63.

Telephone inquiries regarding this communication should be directed to the undersigned at (571) 272-3215. Requests for information regarding your application should be directed to the File Information Unit at (703) 308-2733. Information regarding how to pay for and order a copy of the application, or a specific paper in the application, should be directed to the Certification Division at (571) 272-3150 or 1 (800) 972-6382 (outside the Washington, DC area).

Charlema Grant
Petitions Attorney
Office of Petitions

cc: Conley Rose, P.C
P.O. Box 3267
Houston TX 77253-3267
ATTN: Carol E. Smith

UNITED STATES PATENT AND TRADEMARK OFFICE

UNITED STATES DEPARTMENT OF COMMERCE
United States Patent and Trademark Office
Address: COMMISSIONER FOR PATENTS
P.O. Box 1450
Alexandria, Virginia 22313-1450
www.uspto.gov

APPLICATION NO.	FILING DATE	FIRST NAMED INVENTOR	ATTORNEY DOCKET NO.	CONFIRMATION NO.
12/056,590	03/27/2008	Parijat Dube	YOR920070594US1	9835

48915 7590 06/20/2008
CANTOR COLBURN LLP-IBM YORKTOWN
20 Church Street
22nd Floor
Hartford, CT 06103

EXAMINER
HUTTON JR, WILLIAM D

ART UNIT	PAPER NUMBER
2176	

MAIL DATE	DELIVERY MODE
06/20/2008	PAPER

Please find below and/or attached an Office communication concerning this application or proceeding.

The time period for reply, if any, is set in the attached communication.

UNITED STATES PATENT AND TRADEMARK OFFICE

Commissioner for Patents
United States Patent and Trademark Office
P.O. Box 1450
Alexandria, VA 22313-1450
www.uspto.gov

CANTOR COLBURN LLP-IBM YORKTOWN
20 Church Street
22nd Floor
Hartford CT 06103

In re Application of: Parijat Dube et al. Serial No.: 12/056590 Filed: March 27, 2008 Docket: YOR920070594US1 Title: METHOD FOR ADAPTIVE TRANSCRIPTION OF WEB PAGES	DECISION ON PETITION TO MAKE SPECIAL FOR NEW APPLICATION UNDER 37 C.F.R. § 1.102 & M.P.E.P. § 708.02

This is a decision on the renewed petition filed on March 27, 2008 to make the above-identified application special for accelerated examination procedure under 37 C.F.R. § 1.102(d). The petition to make the application special is **GRANTED**.

The application is eligible for accelerated examination and the petition complies with the conditions for granting the application special status pursuant to the "Change to Practice for Petitions in Patent Applications to Make Special and for Accelerated Examination" published June 26, 2006, in the Federal Register. (71 Fed. Reg. 36323).

The prosecution of the instant application will be conducted expeditiously according to the following guidelines.

1. The application will be docketed to an examiner and taken up for action within two weeks of the date of this decision.

2. Restriction Practice:
   If the examiner determines that the claims are not directed to a single invention, a telephone request to elect one single invention will be made pursuant to MPEP 812.01. As a prerequisite to the grant of this petition, the applicant has agreed to make an oral election, by telephone, without traverse. If the applicant refuses to make an election without traverse, or the examiner cannot reach the applicant after a reasonable effort, the examiner will treat the first claimed invention (invention defined by claim 1) as having being constructively elected without traverse for examination.

3. Office action:

If it is determined that, after appropriate consultation, there is a potential rejection or any other issue to be addressed, the examiner will telephone the applicant and arrange an interview to discuss and resolve the issue. An Office action, other than a Notice of Allowance and Fee(s) Due (Notice of Allowance), will not be issued unless either: 1) an interview was conducted but did not result in agreed to action that places the application in condition for allowance, or, 2) a determination is made that an interview would be unlikely to result in the application being placed in condition for allowance, and 3) an internal conference has been held to review any rejection of any claim.

4. Time for Reply:
An Office action other than a Notice of Allowance or a final Office action will set a shortened statutory period of one month or thirty days, whichever is longer, for reply with no extension of time available under 37 CFR 1.136(a). Failure to timely file a reply within this non-extendible period for reply will result in the abandonment of the application.

5. Reply by Applicant:
A timely reply to an Office action other than the Notice of Allowance must be submitted electronically via EFS or EFS-web and limited to addressing the rejections, objections and requirement made. Any amendment that attempts to: 1) add claims which would result in more than three pending independent claims or more than twenty pending total claims; 2) present claims not encompassed by the pre-examination search or an updated accelerated examination support document; or 3) present claims that are directed a non-elected invention or an invention other than that previously claimed and examined in the application, will be treated as not fully responsive and will not be entered.

   For any amendment to the claims (including any new claim) that is not encompassed by the accelerated examination support document, applicant must provide an updated accelerated examination support document that encompasses the amended or new claims at the time of filing of the amendment.

   To proceed expeditiously with the examination, it is recommended that a reply with amendments made to any claim or with any new claim being added be accompanied by an updated accelerated examination support document or a statement explaining how the amended or new claim is supported by the original accelerated examination support document.

6. Information Disclosure Statement (IDS):
Any IDS filed during prosecution must be submitted electronically via EFS or EFS-web, accompanied by an updated accelerated examination support document, and be in compliance with 37 CFR 1.97 and 1.98.

7. Post-Allowance Processing:
To expedite processing of the allowed application into a patent, the applicant must: 1) pay the required fees within one month of the date of the Notice of Allowance, and 2) not file any post allowance papers not required by the Office. In no event may the issue fee be paid and accepted later than three months from the date of the Notice of Allowance.

8. After-Final and Appeal Procedures:
   To expedite prosecution, after receiving the final Office action, applicant must: 1) promptly file a notice of appeal, an appeal brief and appeal fees; and 2) not request a pre-appeal brief conference.

   Any amendment, affidavit or other evidence filed after final Office action must comply with applicable rules and the requirements outlined in numbered paragraphs 5 and 6 above.

   On appeal, the application will proceed according to normal appeal procedures. After appeal, the application will again be treated special.

9. Proceedings Outside the Normal Examination Process:
   If the application becomes involved in a proceeding that is outside the normal examination process (e.g., a secrecy order, national security review, interference proceeding, petitions under 37 CFR 1.181, 182 or 183), the application will be treated special before and after such proceeding.

10. Final Disposition:
    The twelve-month goal of this accelerated examination procedure ends with a final disposition. The mailing of a final Office action, a Notice of Allowance, the filing of a Notice of Appeal, or the filing of a Request for Continued Examination (RCE) is the final disposition.

If, during prosecution, a paper is not filed electronically using EFS-web, a reply is filed but is not fully responsive, the application is involved in an appeal, or a proceeding outside normal examination process, the application will still be examined expeditiously, however, the final disposition may occur more than twelve months from the filing of the application. In addition, Applicant is reminded that due to the dismissal of the previous petition submission, examination may not be completed within twelve months of the filing date of the application.

Any inquiry regarding this decision should be directed to Kakali Chaki at (571) 272-3719.

/Kakali Chaki/

Kakali Chaki, Quality Assurance Specialist
Technology Center 2100

UNITED STATES PATENT AND TRADEMARK OFFICE

UNITED STATES DEPARTMENT OF COMMERCE
United States Patent and Trademark Office
Address: COMMISSIONER FOR PATENTS
P.O. Box 1450
Alexandria, Virginia 22313-1450
www.uspto.gov

APPLICATION NO.	FILING DATE	FIRST NAMED INVENTOR	ATTORNEY DOCKET NO.	CONFIRMATION NO.
12/056,594	03/27/2008	Philip Bryan Howes	CTT-0009	9840

23413 7590 05/07/2008
CANTOR COLBURN, LLP
20 Church Street
22nd Floor
Hartford, CT 06103

EXAMINER

ART UNIT	PAPER NUMBER
3611	

MAIL DATE	DELIVERY MODE
05/07/2008	PAPER

Please find below and/or attached an Office communication concerning this application or proceeding.

The time period for reply, if any, is set in the attached communication.

UNITED STATES PATENT AND TRADEMARK OFFICE

Commissioner for Patents
United States Patent and Trademark Office
P.O. Box 1450
Alexandria, VA 22313-1450
www.uspto.gov

MAILED
FROM DIRECTORS OFFICE

MAY 06 2008

TECHNOLOGY CENTER 3600

Cantor Colbrun, LLP
20 Church Street
22nd Floor
Hartford, CT 06103

In re application of
Philip Bryan Howes et al.
Application No. 12/056,594
Filed: March 27, 2008
For: VEHICLE AND CARGO TRANSPORT RACHETING TIE DOWN APPARATUS AND SYSTEM

: **DECISION ON PETITION**
: **TO MAKE SPECIAL FOR**
: **NEW APPLICATION**
: **UNDER 37 CFR 1.102**

This is a decision on the petition filed on March 27, 2008 to make the above-identified application special for accelerated examination procedure under 37 C.F.R. § 1.102(d).

The petition to make the application special is **DISMISSED**.

REGULATION AND PRACTICE

A grantable petition to make special under 37 C.F.R. § 1.102(d) and pursuant to the "Change to Practice for Petitions in Patent Applications to Make Special and for Accelerated Examination" published in the Federal Register on June 26, 2006 (71 Fed. Reg. 36323), must satisfy the following conditions:

I. Conditions Regarding the Application:

1. the application must be a non-reissue utility or design application filed under 37 CFR 1.111(a);

2. the application, the petition and the required fees must be filed electronically using the USPTO's electronic filing system (EFS), or EFS-web; if not filed electronically, a statement asserting that EFS and EFS-web were not available during the normal business hours.

3. at the time of filing, the application must be complete under 37 CFR 1.51 and in condition for examination;

4. the application must contain three or fewer independent claims and twenty or fewer total claims and the claims must be directed to a single invention.

II. Conditions Regarding the Petition:

The petition must:

1. be filed with the application;

2. include a statement that applicant agrees not to separately argue the patentability of any independent claim during any appeal in the application;

3. include a statement that applicant agrees to make an election without traverse in a telephone interview.

4. include a statement that applicant agrees to conduct such an interview when requested by the examiner.

5. include a statement, made based on a good faith belief, that a preexamination search in compliance with the following requirements, was conducted, including an identification of the field of search by United States class and subclass, where applicable, and for database searches, the search logic or chemical structure or sequence used as a query, the name of the file(s) searched and the database service, and the date of the search.

The preexamination search must:

5.1 involve U.S. patents and patent application publications, foreign patent documents, and non-patent literature, unless the applicant can justify with reasonable certainty that no references more pertinent than those already identified are likely to be found in the eliminated sources and includes such a justification with this statement;

5.2. be directed to the claimed invention and encompass all of the features of the claims, giving the claims the broadest reasonable expectation;

5.3. encompass the disclosed features that may be claimed.

6. must provide in support of the petition an accelerated examination support document.

An accelerated examination support document must include:

6.1. an information disclosure statement (IDS) in compliance with 37 CFR 1.98 citing each reference deemed most closely related to the subject matter of each of the claims;

6.2. an identification of all the limitations in the claims that are disclosed by the reference specifying where the limitation is disclosed in the cited reference;

6.3. a detailed explanation of how each of the claims are patentable over the references cited with particularity required by 37 CFR 1.111(b) and (c);

6.4. a concise statement of the utility of the invention as defined in each of the independent claims (unless the application is a design application);

6.5. a showing of where each limitation of the claims finds support under 35 USC 112, first paragraph, in the written description of the specification. If applicable, the showing must also identify: (1) each means- (or step) plus-function claim element that invokes consideration under 35 UDC 112, sixth paragraph; and (2) the structure, material, or acts in the specification that corresponds to each means- (or step) plus-function claim element that invokes consideration under 35 UDC 112, sixth paragraph; if the application claims the benefit of one or more applications under title 35, United States Code, the showing must also include where each limitation

of the claims finds support under 35 USC 112, first paragraph, in each such application in which such supports exists;
6.6. an identification of any cited references that may be disqualified under 35 USC 103(c).

REVIEW OF FACTS

The petition in this case fails to comply with conditions II.5.2, and II.6.3, above.

As to condition II.5.2, the petition lacks an indication of a preexamination search that encompasses all of the features of the claims. Specifically, applicant has listed 4 classes that were searched. This would indicate that every patent in every subclass of each of the 4 classes had been reviewed. It is doubtful that such is the case. If that is the case, a statement on the record stating such should be made. If not, the specific subclasses that applicant reviewed needs to be listed, since the specifics of the required classification search needs to be supplied. With respect to the classification search, in addition to any areas already searched, the search needs to include at least a search of 410/7, 9, 10, 11, 12, 19, 20, 21, 22, 23, 97 and 100; as well as 254/217, 223 and 247.

With respect to the required text search of the US Patents database, the search logic used by the applicant does not appear to include enough search terms to cover the claimed limitations and thus may not have located all of the most pertinent art. Search logic encompassing the "broadest reasonable interpretation" of the claimed invention is required. Specifically, a text search not including class 248 makes the text search incomplete. The USPTO website has an example of the proper manner of performing and documenting a preexamination search for Accelerated Examination petitions at: http://www.uspto.gov/web/patents/accelerated/. Additionally, an example of an additional search term including class 248 is provided below:

CCL/248/$ and (ratchet or pawl or winch)

The sample of search terms are not meant to be the sole search terms that can or should be employed in this application, but is meant solely as an example for applicant's assistance. The same additions shown above for the text search can also be used in the search of foreign databases and NPL search.

As to condition II.6.3, there is not a satisfactory detailed explanation of claim patentability over each of the references. The explanation needs to specify how each of the claims (not just the independent claims) are patentable over each of the cited references, which includes the need to specify whether each of the dependent claims are separately patentable beyond the limitations contained in the independent claims, and if so how, or a statement made that the dependent claims are not separately patentable. Specifically, at least some of the dependent claims 2-8 appear to have their limitations admittedly taught by the cited prior art. In addition, any indication of patentability over the prior art references needs to take in to account any distinctions seen as being obvious over any single or a combination of cited references. In addition, there appear to be inconsistencies between the Identification of Limitations Disclosed by References and the Detailed Explanation of Patentability. At least one example is that

claim 8 appears to be admitted as being taught by Cummings, but Cummings is subsequently indicated as "lacking any teaching or suggestion" of the subject matter of claim 8. Any such discrepancies must be corrected or explained.

The USPTO website has an example of the proper manner of documenting limitations taught by cited art, and the manner of explaining claim patentability over the references, for an Accelerated Examination Support Document at: http://www.uspto.gov/web/patents/accelerated/.

Therefore, the petition fails to meet the required conditions to be accorded special status under the accelerated examination procedure.

DECISION

For the above-stated reasons, the petition is **DISMISSED**. The application will therefore be taken up by the examiner for action in its regular turn.

Petitioner is given a single opportunity to perfect the petition. Any request for reconsideration of this decision must be submitted within 1 (one) month or 30 (thirty) days, whichever is longer, (no extension of time under 37 CFR 1.136(a)) from the date of this decision in order to be considered timely. Any request for reconsideration must address the deficiencies indicated above.

Petitioner is reminded that, upon granting of the special status of the application on request for reconsideration, the application will be processed expeditiously. However, due to the dismissal of the instant petition, examination may not be completed within twelve months of the filing date of the application.

Any inquiry regarding this decision should be directed to Quality Assurance Specialist Steven N. Meyers, at (571) 272-6611.

Steven N. Meyers,
Quality Assurance Specialist
Technology Center 3600

Sm/sm: 5/4/08

UNITED STATES PATENT AND TRADEMARK OFFICE

UNITED STATES DEPARTMENT OF COMMERCE
United States Patent and Trademark Office
Address: COMMISSIONER FOR PATENTS
P.O. Box 1450
Alexandria, Virginia 22313-1450
www.uspto.gov

APPLICATION NO.	FILING DATE	FIRST NAMED INVENTOR	ATTORNEY DOCKET NO.	CONFIRMATION NO.
12/056,594	03/27/2008	Philip Bryan Howes	CTT-0009	9840

23413 7590 06/13/2008
CANTOR COLBURN, LLP
20 Church Street
22nd Floor
Hartford, CT 06103

EXAMINER
DAYOAN, DARRELL G

ART UNIT	PAPER NUMBER
3612	

MAIL DATE	DELIVERY MODE
06/13/2008	PAPER

Please find below and/or attached an Office communication concerning this application or proceeding.

The time period for reply, if any, is set in the attached communication.

UNITED STATES PATENT AND TRADEMARK OFFICE

Commissioner for Patents
United States Patent and Trademark Office
P.O. Box 1450
Alexandria, VA 22313-1450
www.uspto.gov

MAILED
FROM DIRECTORS OFFICE

JUN 13 2008

TECHNOLOGY CENTER 3600

Cantor Colbrun, LLP
20 Church Street
22nd Floor
Hartford, CT 06103

In re application of
Philip Bryan Howes et al.
Application No. 12/056,594
Filed: March 27, 2008
For: VEHICLE AND CARGO TRANSPORT RACHETING TIE DOWN APPARATUS AND SYSTEM

: **DECISION ON PETITION TO MAKE SPECIAL FOR NEW APPLICATION UNDER 37 CFR 1.102**

This is a decision on the renewed petition filed on June 5, 2008, and supplemented on June 11, 2008 to make the above-identified application special for accelerated examination procedure under 37 C.F.R. § 1.102(d).

The petition to make the application special is **GRANTED**.

The application is eligible for accelerated examination and the petition complies with the conditions for granting the application special status pursuant to the "Change to Practice for Petitions in Patent Applications to Make Special and for Accelerated Examination" published June 26, 2006, in the Federal Register. (71 Fed. Reg. 36323).

The prosecution of the instant application will be conducted expeditiously according to the following guidelines.

1. The application will be docketed to an examiner and taken up for action within two weeks of the date of this decision.

2. Restriction Practice:
If the examiner determines that the claims are not directed to a single invention, a telephone request to elect one single invention will be made pursuant to MPEP 812.01. As a prerequisite to the grant of this petition, the applicant has agreed to make an oral election, by telephone, without traverse. If the applicant refuses to make an election without traverse, or the examiner cannot reach the applicant after a reasonable effort, the examiner will treat the first claimed invention (invention defined by claim 1) as having being constructively elected without traverse for examination.

3. Office action:
If it is determined that, after appropriate consultation, there is a potential rejection or any other issue to be addressed, the examiner will telephone the applicant and arrange an interview to discuss and resolve the issue. An Office action, other than a Notice of Allowance and Fee(s) Due (Notice of Allowance), will not be issued unless either: 1) an interview was conducted but did not result in agreed to action that places the application in condition for allowance, or, 2) a determination is made that an interview would be unlikely to result in the application being placed in condition for allowance, and 3) an internal conference has been held to review any rejection of any claim.

4. Time for Reply:
An Office action other than a Notice of Allowance or a final Office action will set a shortened statutory period of one month or thirty days, whichever is longer, for reply with no extension of time available under 37 CFR 1.136(a). Failure to timely file a reply within this non-extendible period for reply will result in the abandonment of the application.

5. Reply by Applicant:
A timely reply to an Office action other than the Notice of Allowance must be submitted electronically via EFS or EFS-web and limited to addressing the rejections, objections and requirement made. Any amendment that attempts to: 1) add claims which would result in more than three pending independent claims or more than twenty pending total claims; 2) present claims not encompassed by the pre-examination search or an updated accelerated examination support document; or 3) present claims that are directed to a non-elected invention or an invention other than that previously claimed and examined in the application, will be treated as not fully responsive and will not be entered.

For any amendment to the claims (including any new claim) that is not encompassed by the accelerated examination support document, applicant must provide an updated accelerated examination support document that encompasses the amended or new claims at the time of filing of the amendment.

To proceed expeditiously with the examination, it is recommended that a reply with amendments made to any claim or with any new claim being added be accompanied by an updated accelerated examination support document or a statement explaining how the amended or new claim is supported by the original accelerated examination support document.

6. Information Disclosure Statement (IDS):
Any IDS filed during prosecution must be submitted electronically via EFS or EFS-web, accompanied by an updated accelerated examination support document, and be in compliance with 37 CFR 1.97 and 1.98.

7. Post-Allowance Processing:
To expedite processing of the allowed application into a patent, the applicant must: 1) pay the required fees within one month of the date of the Notice of Allowance, and 2) not file any post allowance papers not required by the Office. In no event may the issue

fee be paid and accepted later than three months from the date of the Notice of Allowance.

8. After-Final and Appeal Procedures:
To expedite prosecution, after receiving the final Office action, applicant must: 1) promptly file a notice of appeal, an appeal brief and appeal fees; and 2) not request a pre-appeal brief conference.

Any amendment, affidavit or other evidence filed after final Office action must comply with applicable rules and the requirements outlined in numbered paragraphs 5 and 6 above.

On appeal, the application will proceed according to normal appeal procedures. After appeal, the application will again be treated special.

9. Proceedings Outside the Normal Examination Process:
If the application becomes involved in a proceeding that is outside the normal examination process (e.g., a secrecy order, national security review, interference proceeding, petitions under 37 CFR 1.181, 182 or 183), the application will be treated special before and after such proceeding.

10. Final Disposition:
The twelve month goal of this accelerated examination procedure ends with a final disposition. The mailing of a final Office action, a Notice of Allowance, the filing of a Notice of Appeal, or the filing of a Request for Continued Examination (RCE) is the final disposition.

If, during prosecution, a paper is not filed electronically using EFS-web, a reply is filed but is not fully responsive, the application is involved in an appeal, or a proceeding outside normal examination process, the application will still be examined expeditiously, however, the final disposition may occur more than twelve months from the filing of the application.

Any inquiry regarding this decision should be directed to Quality Assurance Specialist Steven N. Meyers, at (571) 272-6611.

Steven N. Meyers,
Quality Assurance Specialist
Technology Center 3600

Sm/sm: 6/12/08

UNITED STATES PATENT AND TRADEMARK OFFICE

Commissioner for Patents
United States Patent and Trademark Office
P.O. Box 1450
Alexandria, VA 22313-1450
www.uspto.gov

MAYER & WILLIAMS PC
251 NORTH AVENUE WEST
2ND FLOOR
WESTFIELD NJ 07090

COPY MAILED

NOV 2 4 2008

OFFICE OF PETITIONS

In re Application of:	:	
Sikes et al.	:	
Application No. 12/056689	:	DECISION GRANTING
Filing or 371(c) Date: 03/27/2008	:	PETITION UNDER
Title of Invention: MEDICAL DEVICES	:	37 CFR 1.47(a)
HAVING BIOERODABLE LAYERS FOR THE	:	
RELEASE OF THERAPEUTIC AGENTS	:	

This is in response to a petition under 37 C.F.R 1.47(a), filed October 20, 2008, to allow the other inventor(s) to proceed with the application on behalf of himself or herself and the nonsigning inventor.

The petition is **granted**.

The above-identified application and papers have been reviewed and found in compliance with 37 CFR 1.47(a). This application is hereby accorded Rule 1.47(a) status.

Petitioner has shown that the non-signing inventor, Mark Steckel, refuses to join in the application.

As provided in Rule 1.47(a), this Office will forward notice of this application's filing to the non-signing inventor at the addresses given in the Petition. Notice of the filing of this application will also be published in the Official Gazette.

The application file is being referred to the Office of Patent Application Processing for continued processing in the normal course of business.

Telephone inquiries related to this decision may be directed to the undersigned at (571) 272-3232.

/Derek L. Woods/
Derek L. Woods
Attorney
Office of Petitions

UNITED STATES PATENT AND TRADEMARK OFFICE

Commissioner for Patents
United States Patent and Trademark Office
P.O. Box 1450
Alexandria, VA 22313-1450
www.uspto.gov

MR. MARK STECKEL
7 RIDGE ROAD
SHARON, MA 02067

COPY MAILED

NOV 2 4 2008

OFFICE OF PETITIONS

In re Application of:	:	
Sikes et al.	:	
Application No. 12/056689	:	LETTER
Filing or 371(c) Date: 03/27/2008	:	
Title of Invention: MEDICAL DEVICES	:	
HAVING BIOERODABLE LAYERS FOR THE	:	
RELEASE OF THERAPEUTIC AGENTS	:	

Dear Mr. Steckel:

You are named as a joint inventor in the above-identified United States patent application filed under the provisions of 35 U.S.C. 116 (United States Code) and 37 CFR 1.47(a), Rules of Practice in Patent Cases. Should a patent be granted on the application you will be designated therein as a joint inventor.

As a named inventor you are entitled to inspect any paper in the file wrapper of the application, order copies of all or any part thereof (at a prepaid cost per 37 CFR 1.19) or make your position of record in the application. Alternatively, you may arrange to do any of the preceding through a registered patent attorney or agent presenting written authorization from you. If you care to join the application, counsel of record (see below) would presumably assist you. Joining in the application would entail the filing of an appropriate oath or declaration by you pursuant to 37 CFR 1.63.

Telephone inquiries regarding this communication should be directed to the undersigned at (571) 272-3232. Requests for information regarding your application should be directed to the File Information Unit at (703) 308-2733. Information regarding how to pay for and order a copy of the application, or a specific paper in the application, should be directed to Certification Division at (703) 308-9726 or 1-800-972-6382 (outside the Washington D.C. area).

/Derek L. Woods/
Derek L. Woods
Attorney
Office of Petitions

CC: MAYER & WILLIAMS PC
251 NORTH AVENUE WEST
2ND FLOOR
WESTFIELD NJ 07090

UNITED STATES PATENT AND TRADEMARK OFFICE

Commissioner for Patents
United States Patent and Trademark Office
P.O. Box 1450
Alexandria, VA 22313-1450
www.uspto.gov

SPRINKLE IP LAW GROUP
1301 W. 25TH STREET
SUITE 408
AUSTIN, TX 78705

MAILED

MAY 19 2010

OFFICE OF PETITIONS

In re Application of	:	
Harger et al.	:	DECISION ON PETITION
Application No. 12/056,720	:	TO WITHDRAW
Filed: March 27, 2008	:	FROM RECORD
Attorney Docket No. INIT1250-1	:	

This is a decision on the Request to Withdraw as attorney or agent of record under 37 C.F.R. § 1.36(b), filed on April 1, 2010.

The request is **NOT APPROVED**.

The Office no longer accepts address changes to a new practitioner or law firm filed with requests under 37 C.F.R. § 1.36(b). The Office will only accept correspondence address changes to the most current address information provided for the assignee of the entire interest *who properly became of record under 37 CFR 3.71,* or, if no assignee of the entire interest has properly been made of record, the most current address information provided for the first named inventor. 37 CFR 3.71(c) states:

> *An assignee becomes of record either in a national patent application or a reexamination proceeding by filing a statement in compliance with § 3.73(b) that is signed by a party who is authorized to act on behalf of the assignee.*

Further, The Office will require the practitioner(s) to certify that he, she or they have: (1) given reasonable notice to the client, prior to the expiration of the reply period, which the practitioner(s) intends to withdraw from employment; (2) delivered to the client or a duly authorized representative of the client all papers and property (including funds) to which the client is entitled; and (3) notified the client of any replies that may be due and the time frame within which the client must respond, pursuant to 37 CFR 10.40 (c).

The current request does not state the proper certifications. Accordingly, any subsequent requests must include all of the above listed certifications pursuant to 37 CFR 10.40.

All future communications from the Office will be directed to above-listed address until otherwise properly notified by the applicant or a proper change of correspondence address have been submitted.

There are no outstanding Office actions that require a reply from the applicant.

Telephone inquires concerning this decision should be directed to the undersigned at (571) 272-6059. All other inquires concerning either the examination or status of the application should be directed to the Technology Center.

A. Kelley

Alicia Kelley
Petitions Examiner
Office of Petitions

UNITED STATES PATENT AND TRADEMARK OFFICE

UNITED STATES DEPARTMENT OF COMMERCE
United States Patent and Trademark Office
Address: COMMISSIONER FOR PATENTS
P.O. Box 1450
Alexandria, Virginia 22313-1450
www.uspto.gov

APPLICATION NO.	FILING DATE	FIRST NAMED INVENTOR	ATTORNEY DOCKET NO.	CONFIRMATION NO.
12/056,726	03/27/2008	Tamiya Onodera	JP920080033US1 (163-231)	1056

49267 7590 06/28/2008
KEUSEY, TUTUNJIAN & BITETTO, P.C.
20 CROSSWAYS PARK NORTH, SUITE 210
WOODBURY, NY 11797

EXAMINER
ZHEN, WEI Y

ART UNIT	PAPER NUMBER
2191	

MAIL DATE	DELIVERY MODE
06/28/2008	PAPER

Please find below and/or attached an Office communication concerning this application or proceeding.

The time period for reply, if any, is set in the attached communication.

UNITED STATES PATENT AND TRADEMARK OFFICE

Commissioner for Patents
United States Patent and Trademark Office
P.O. Box 1450
Alexandria, VA 22313-1450
www.uspto.gov

06/30/2008

James J. Bitetto
Keusey, Tutujian and Bietto, PC
20 Crossways Park North, Suite 210
Woodbury NY 11797

In re Application of: Tamiya Onodera et al. Serial No.: 12/056726 Filed: March 27, 2008 Docket: JP920080033US1 (163-231) Title: VERSIONING OPTIMIZATION FOR DYNAMICALLY-TYPED LANGUAGES	DECISION ON PETITION TO MAKE SPECIAL FOR NEW APPLICATION UNDER 37 C.F.R. § 1.102 & M.P.E.P. § 708.02

This is a decision on the petition filed on March 27, 2008 to make the above-identified application special for accelerated examination procedure under 37 C.F.R. § 1.102(d).

The petition to make the application special is **DISMISSED**.

REGULATION AND PRACTICE

A grantable petition to make special under 37 C.F.R. § 1.102(d) and pursuant to the "Change to Practice for Petitions in Patent Applications to Make Special and for Accelerated Examination" published in the Federal Register on June 26, 2006 (71 Fed. Reg. 36323), must satisfy the following conditions:

I. Conditions Regarding the Application:

1. the application must be a non-reissue utility or design application filed under 37 CFR 1.111(a);
2. the application, the petition and the required fees must be filed electronically using the USPTO's electronic filing system (EFS), or EFS-web; if not filed electronically, a statement asserting that EFS and EFS-web were not available during the normal business hours.
3. at the time of filing, the application must be complete under 37 CFR 1.51 and in condition for examination;
4. the application must contain three or fewer independent claims and twenty or fewer total claims and the claims must be directed to a single invention.

II. Conditions Regarding the Petition:

The petition must:

1. be filed with the application;

2. include a statement that applicant agrees not to separately argue the patentability of any independent claim during any appeal in the application;

3. include a statement that applicant agrees to make an election without traverse in a telephone interview.

4. include a statement that applicant agrees to conduct such an interview when requested by the examiner.

5. include a statement, made based on a good faith belief, that a preexamination search in compliance with the following requirements, was conducted, including an identification of the filed of search by United States class and subclass, where applicable, and for database searches, the search logic or chemical structure or sequence used as a query, the name of the file(s) searched and the database service, and the date of the search.

The preexamination search must:

5.1 involve U.S. patents and patent application publications, foreign patent documents, and non-patent literature, unless the applicant can justify with reasonable certainty that no references more pertinent than those already identified are likely to be found in the eliminated sources and includes such a justification with this statement;

5.2. be directed to the claimed invention and encompass all of the features of the claims, giving the claims the broadest reasonable expectation;

5.3. encompass the disclosed features that may be claimed.

6. must provide in support of the petition an accelerated examination support document. An accelerated examination support document must include:

6.1. an information disclosure statement (IDS) in compliance with 37 CFR 1.98 citing each reference deemed most closely related to the subject matter of each of the claims;

6.2. an identification of all the limitations in the claims that are disclosed by the reference specifying where the limitation is disclosed in the cited reference;

6.3. a detailed explanation of how each of the claims are patentable over the references cited with particularity required by 37 CFR 1.111(b) and (c);

6.4. a concise statement of the utility of the invention as defined in each of the independent claims (unless the application is a design application);

6.5. a showing of where each limitation of the claims finds support under 35 USC 112, first paragraph, in the written description of the specification. If applicable, the showing must also identify: (1) each means- (or step) plus-function claim element that invokes consideration under 35 UDC 112, sixth paragraph; and (2) the structure, material, or acts in the specification that corresponds to each means- (or step) plus-function claim element that invokes consideration under 35 UDC 112, sixth paragraph; if the application claims the benefit of one or more applications under title 35, United States Code, the showing must also include where each limitation of the claims finds support under 35 USC 112, first paragraph, in each such application in which such supports exists;

6.6. an identification of any cited references that may be disqualified under 35 USC 103(c).

REVIEW OF FACTS

The conditions I1-I4, II1-II4, II5.1, II5.3, II6.1, II6.4, and II6.6 above are met. However, the petition fails to comply with conditions II 5.2, II6.2-II6.3, and II6.5 above. Therefore, the petition fails to meet the required conditions to be accorded special status under the accelerated examination procedure.

Regarding the requirement of MPEP § 708.02(a)(I.)(H)[1] and items II.5.2 above, the pre-examination search must be directed to the (instant) claimed invention and encompass all of the features of the claims as well as encompass the disclosed features that may be claimed. Text searches of section (A) of the Pre-examination Search Document should cover individual features of the claims themselves as well as a combination of features. The text search for US and foreign documents as well as for non-patent literature should include appropriate terms, Boolean operators, truncations, and proximities if applicable.

The class and subclass selected for searching is appropriate. However, the terms used in the text search appears to be unnecessarily narrow as the search does not include variations or synonyms of individual terms or phrases; nor are proximity operators included in the strategies. Instead, only terms recited in the claim associated by the broad operator "and" are included in the text search. Use of variations and synonyms of different terms or phrases would result in retrieval of relevant references which might not otherwise be retrieved. Further, failure to use proximity operators might result in an unreasonably large number of retrievals and prevent careful consideration of the most relevant references. The text search could be improved for example, if in addition to use of "optimized compiling" and "hotpath", the following strategy could be employed: (optimiz$6 or improv$6) with compil$6 and "hot trace$2 or (execut$6 with frequen$6))". It should be noted that the suggested strategy is given as an example only and is not to be considered an exhaustive listing. Synonyms and variations of all terms should be considered along with proximity operators. Finally, it is recommended that databases on IEEE or ACM be included in the search. Clarification and/or correction are required.

As noted in MPEP 719.05, a classification search is a complete search of all documents in a particular subclass. The text strategy provided for the USPTO database appears to limit class and subclass searches by a text search. Clarification and/or correction are required.

Examples of various search strategies can be found on USPTO website, using the link http://www.uspto.gov/web/patents/accelerated/ and clicking on "Sample Accelerated Examination Support Document".

Regarding the requirement of MPEP § 708.02(a)(I.)(I)(3) and item II.6.2 above, the accelerated examination support document must include an identification of all the limitations in the claims that are disclosed by the reference specifying where the limitation is disclosed in the cited reference. The discussion provided of the Wu reference in section 9(B) of the Examination Support Document does not identify which specific limitation in claim 1 is disclosed in the reference. Instead, Wu identifies specific features of the claim that are not disclosed by the reference. On page 2 of the document, a statement that Wu teaches standard optimizations to the

[1] MPEP 8th ed. rev 6 September 2007

code is made but the language included therein does not appear to relate to a specific claim limitation. Nor does Petitioner identify the section of the reference where this material is found.

Regarding the requirement of MPEP § 708.02(a)(I.)(I)(3) and item II.6.3 above the accelerated examination support document must include a detailed explanation of how each of the claims are patentable over the references cited with particularity required by 37 CFR 1.111(b) and (c). As discussed above, section 9(B) provides a discussion of references deemed most closely related. The section also discusses elements not disclosed by the reference. However, not all elements discussed as not disclosed by the reference are included in section 9(C). For example, in section 9(B), Petitioner indicates that Wu fails to disclose gathering hot-type information. Other references discussed appear to disclose gathering of hot-type information but not via use of inferencing and profiling. Yet this is feature not included in section 9(C). Clarification or correction is required.

Finally, with respect to the requirement of MPEP § 708.02(a)(I.)(I)(5) and item II.6.5 above, the Accelerated Examination Support Document must provide a showing of where each limitation of the claims finds support under 35 USC 112, first paragraph, in the written description of the specification. Paragraph 9(E) of the Examination Support Document includes a general allegation that support for claim 1 may be found in several paragraphs listed and in Figure 1. However, this general allegation of support does not constitute a showing of where support for each limitation in the claim may be found. Clarification and identification of support **for each claim limitation** is required.

DECISION

For the above-stated reasons, the petition is **Dismissed**. The application will therefore be taken up by the examiner for action in its regular turn.

Petitioner is given a single opportunity to perfect the petition. Any request for reconsideration of this decision must be submitted within 1 (one) month or 30 (thirty) days, whichever is longer, (no extension of time under 37 CFR 1.136(a)) from the date of this decision in order to be considered timely. Any request for reconsideration must address the deficiencies indicated above.

Petitioner is reminded that, upon granting of the special status of the application on request for reconsideration, the application will be processed expeditiously. However, due to the dismissal of the instant petition, examination may not be completed within twelve months of the filing date of the application.

Any inquiry regarding this decision should be directed Gail Hayes, Quality Assurance Specialist, at (571) 272-3591.

/Gail Hayes/

Gail Hayes, Quality Assurance Specialist
Technology Center 2100

UNITED STATES PATENT AND TRADEMARK OFFICE

UNITED STATES DEPARTMENT OF COMMERCE
United States Patent and Trademark Office
Address: COMMISSIONER FOR PATENTS
P.O. Box 1450
Alexandria, Virginia 22313-1450
www.uspto.gov

APPLICATION NO.	FILING DATE	FIRST NAMED INVENTOR	ATTORNEY DOCKET NO.	CONFIRMATION NO.
12/056,726	03/27/2008	Tamiya Onodera	JP920080033US1 (163-231)	1056

49267 7590 09/02/2008
KEUSEY, TUTUNJIAN & BITETTO, P.C.
20 CROSSWAYS PARK NORTH, SUITE 210
WOODBURY, NY 11797

EXAMINER
CHEN, QING

ART UNIT	PAPER NUMBER
2191	

MAIL DATE	DELIVERY MODE
09/02/2008	PAPER

Please find below and/or attached an Office communication concerning this application or proceeding.

The time period for reply, if any, is set in the attached communication.

UNITED STATES PATENT AND TRADEMARK OFFICE

Commissioner for Patents
United States Patent and Trademark Office
P.O. Box 1450
Alexandria, VA 22313-1450
www.uspto.gov

August 28, 2008

James J. Bitetto
Keusey, Tutunjian and Bitetto, PC
20 Crossways Park North, Suite 210
Woodbury NY 11797

In re Application of Inventor Name: Roth et al. Serial No.: 12/~~056,726~~ 056,726 Filed: March 31, 2008 Docket: JP920080033US1 (163-231) Title: VERSIONING OPTIMIZATION FOR DYNAMICALLY-TYPED LANGUAGES	DECISION ON PETITION TO MAKE SPECIAL FOR NEW APPLICATION UNDER 37 C.F.R. § 1.102 & M.P.E.P. § 708.02

This is a decision on the petition filed on July 28, 2008 to make the above-identified application special for accelerated examination procedure under 37 C.F.R. § 1.102(d).

The petition to make the application special is **GRANTED**.

REGULATION AND PRACTICE

A grantable petition to make special under 37 C.F.R. § 1.102(d) and pursuant to the "Change to Practice for Petitions in Patent Applications to Make Special and for Accelerated Examination" published in the Federal Register on June 26, 2006 (71 Fed. Reg. 36323), must satisfy the following conditions:

I. Conditions Regarding the Application:

1. the application must be a non-reissue utility or design application filed under 37 CFR 1.111(a);
2. the application, the petition and the required fees must be filed electronically using the USPTO's electronic filing system (EFS), or EFS-web; if not filed electronically, a statement asserting that EFS and EFS-web were not available during the normal business hours.
3. at the time of filing, the application must be complete under 37 CFR 1.51 and in condition for examination;
4. the application must contain three or fewer independent claims and twenty or fewer total claims and the claims must be directed to a single invention.

II. Conditions Regarding the Petition:

The petition must:

1. be filed with the application;

2. include a statement that applicant agrees not to separately argue the patentability of any independent claim during any appeal in the application;

3. include a statement that applicant agrees to make an election without traverse in a telephone interview.

4. include a statement that applicant agrees to conduct such an interview when requested by the examiner.

5. include a statement, made based on a good faith belief, that a preexamination search in compliance with the following requirements, was conducted, including an identification of the filed of search by United States class and subclass, where applicable, and for database searches, the search logic or chemical structure or sequence used as a query, the name of the file(s) searched and the database service, and the date of the search.

The preexamination search must:

5.1 involve U.S. patents and patent application publications, foreign patent documents, and non-patent literature, unless the applicant can justify with reasonable certainty that no references more pertinent than those already identified are likely to be found in the eliminated sources and includes such a justification with this statement;

5.2. be directed to the claimed invention and encompass all of the features of the claims, giving the claims the broadest reasonable expectation;

5.3. encompass the disclosed features that may be claimed.

6. must provide in support of the petition an accelerated examination support document. An accelerated examination support document must include:

6.1. an information disclosure statement (IDS) in compliance with 37 CFR 1.98 citing each reference deemed most closely related to the subject matter of each of the claims;

6.2. an identification of all the limitations in the claims that are disclosed by the reference specifying where the limitation is disclosed in the cited reference;

6.3. a detailed explanation of how each of the claims are patentable over the references cited with particularity required by 37 CFR 1.111(b) and (c);

6.4. a concise statement of the utility of the invention as defined in each of the independent claims (unless the application is a design application);

6.5. a showing of where each limitation of the claims finds support under 35 USC 112, first paragraph, in the written description of the specification. If applicable, the showing must also identify: (1) each means- (or step) plus-function claim element that invokes consideration under 35 UDC 112, sixth paragraph; and (2) the structure, material, or acts in the specification that corresponds to each means- (or step) plus-function claim element that invokes consideration under 35 UDC 112, sixth paragraph; if the application claims the benefit of one or more applications under title 35, United States Code, the showing must also include where each limitation of the claims finds support under 35 USC 112, first paragraph, in each such application in which such supports exists;

6.6. an identification of any cited references that may be disqualified under 35 USC 103(c).

REVIEW OF FACTS

The conditions I1-I4, II1-II4, II5.1-II5.3, II.6.1-II6.6 above are met. Therefore, the petition meets the required conditions to make the above-identified application special for accelerated examination procedure under 37 C.F.R. § 1.102(d).

DECISION

For the above-stated reasons, the petition is **Granted**.

The application is eligible for accelerated examination and the petition complies with the conditions for granting the application special status pursuant to the "Change to Practice for Petitions in Patent Applications to Make Special and for Accelerated Examination" published June 26, 2006, in the Federal Register. (71 Fed. Reg. 36323).

The prosecution of the instant application will be conducted expeditiously according to the following guidelines.

1. The application will be docketed to an examiner and taken up for action within two weeks of the date of this decision.

2. Restriction Practice:
   If the examiner determines that the claims are not directed to a single invention, a telephone request to elect one single invention will be made pursuant to MPEP 812.01. As a prerequisite to the grant of this petition, the applicant has agreed to make an oral election, by telephone, without traverse. If the applicant refuses to make an election without traverse, or the examiner cannot reach the applicant after a reasonable effort, the examiner will treat the first claimed invention (invention defined by claim 1) as having being constructively elected without traverse for examination.

3. Office action:
   If it is determined that, after appropriate consultation, there is a potential rejection or any other issue to be addressed, the examiner will telephone the applicant and arrange an interview to discuss and resolve the issue. An Office action, other than a Notice of Allowance and Fee(s) Due (Notice of Allowance), will not be issued unless either: 1) an interview was conducted but did not result in agreed to action that places the application in condition for allowance, or, 2) a determination is made that an interview would be unlikely to result in the application being placed in condition for allowance, and 3) an internal conference has been held to review any rejection of any claim.

4. Time for Reply:
   An Office action other than a Notice of Allowance or a final Office action will set a shortened statutory period of one month or thirty days, whichever is longer, for reply with no extension of time available under 37 CFR 1.136(a). Failure to timely file a reply

within this non-extendible period for reply will result in the abandonment of the application.

5. Reply by Applicant:
A timely reply to an Office action other than the Notice of Allowance must be submitted electronically via EFS or EFS-web and limited to addressing the rejections, objections and requirement made. Any amendment that attempts to: 1) add claims which would result in more than three pending independent claims or more than twenty pending total claims; 2) present claims not encompassed by the pre-examination search or an updated accelerated examination support document; or 3) present claims that are directed a non-elected invention or an invention other than that previously claimed and examined in the application, will be treated as not fully responsive and will not be entered.

   For any amendment to the claims (including any new claim) that is not encompassed by the accelerated examination support document, applicant must provide an updated accelerated examination support document that encompasses the amended or new claims at the time of filing of the amendment.

   To proceed expeditiously with the examination, it is recommended that a reply with amendments made to any claim or with any new claim being added be accompanied by an updated accelerated examination support document or a statement explaining how the amended or new claim is supported by the original accelerated examination support document.

6. Information Disclosure Statement (IDS):
Any IDS filed during prosecution must be submitted electronically via EFS or EFS-web, accompanied by an updated accelerated examination support document, and be in compliance with 37 CFR 1.97 and 1.98.

7. Post-Allowance Processing:
To expedite processing of the allowed application into a patent, the applicant must: 1) pay the required fees within one month of the date of the Notice of Allowance, and 2) not file any post allowance papers not required by the Office. In no event may the issue fee be paid and accepted later than three months from the date of the Notice of Allowance.

8. After-Final and Appeal Procedures:
To expedite prosecution, after receiving the final Office action, applicant must: 1) promptly file a notice of appeal, an appeal brief and appeal fees; and 2) not request a pre-appeal brief conference.

   Any amendment, affidavit or other evidence filed after final Office action must comply with applicable rules and the requirements outlined in numbered paragraphs 5 and 6 above.

   On appeal, the application will proceed according to normal appeal procedures. After appeal, the application will again be treated special.

9. Proceedings Outside the Normal Examination Process:
   If the application becomes involved in a proceeding that is outside the normal examination process (e.g., a secrecy order, national security review, interference proceeding, petitions under 37 CFR 1.181, 182 or 183), the application will be treated special before and after such proceeding.

10. Final Disposition:
    The twelve-month goal of this accelerated examination procedure ends with a final disposition. The mailing of a final Office action, a Notice of Allowance, the filing of a Notice of Appeal, or the filing of a Request for Continued Examination (RCE) is the final disposition.

If, during prosecution, a paper is not filed electronically using EFS-web, a reply is filed but is not fully responsive, the application is involved in an appeal, or a proceeding outside normal examination process, the application will still be examined expeditiously, however, the final disposition may occur more than twelve months from the filing of the application.

Any inquiry regarding this decision should be directed Gail Hayes, Quality Assurance Specialist, at (571) 272-3591.

/Gail Hayes/

Gail Hayes, Quality Assurance Specialist
Technology Center 2100

UNITED STATES PATENT AND TRADEMARK OFFICE

Commissioner for Patents
United States Patent and Trademark Office
P.O. Box 1450
Alexandria, VA 22313-1450
www.uspto.gov

VERIZON
PATENT MANAGEMENT GROUP
1320 NORTH COURT HOUSE ROAD
9TH FLOOR
ARLINGTON VA 22201-2909

COPY MAILED

MAY 12 2009

OFFICE OF PETITIONS

In re Application of	:	
Ramakrishnan R. Sankaranarayan	:	
Application No. 12/056,728	:	ON PETITION
Filed: March 27, 2008	:	
Attorney Docket No. 20060345	:	

This is a decision on the petition to revive under 37 CFR 1.137(b), filed April 20, 2009, and supplemented with fees on May 4, 2009.

The petition under 37 CFR 1.137(b) is **GRANTED**.

The above-identified application became abandoned for failure to timely file a reply in response to the Notice to File Missing Parts of Nonprovisional Application, mailed April 16, 2008. This Notice set an extendable period for reply of two (2) months for applicant to submit an executed oath or declaration and the surcharge for its late filing, together with the statutory basic filing fee and additional claims fees. No reply having been received, the application became abandoned on June 17, 2008.

With the instant petition, applicant has paid the petition fee, made the proper statement of unintentional delay, and submitted the required reply in the form of the missing fees and a Rule 47(b) petition.

The matter is being retained in the Office of Petitions for consideration of the Rule 47(b) petition, filed April 20, 2009 (and supplemented with exhibits on May 4, 2009)

Telephone inquiries related to this decision should be directed to the undersigned at (571)272-3207.

Cliff Congo
Petitions Attorney
Office of Petitions

UNITED STATES PATENT AND TRADEMARK OFFICE

Commissioner for Patents
United States Patent and Trademark Office
P.O. Box 1450
Alexandria, VA 22313-1450
www.uspto.gov

VERIZON
PATENT MANAGEMENT GROUP
1320 NORTH COURT HOUSE ROAD
9TH FLOOR
ARLINGTON VA 22201-2909

COPY MAILED

MAY 12 2009

OFFICE OF PETITIONS

In re Application of	:	
Ramakrishnan R. Sankaranarayan	:	
Application No. 12/056,728	:	ON PETITION
Filed: March 27, 2008	:	
Attorney Docket No. 20060345	:	

This is a decision on the petition to under 37 CFR 1.47(b), filed April 20, 2009, and supplemented with exhibits on May 4, 2009.

The petition under 37 C.F.R. § 1.47(b) is **DISMISSED**.

Rule 47 applicant is given TWO MONTHS from the mailing date of this decision to reply, correcting the below-noted deficiencies. Any reply should be entitled "Request for Reconsideration of Petition Under 37 C.F.R. § 1.47(b)," and should only address the deficiencies noted below, except that the reply may include an oath or declaration executed by the non-signing inventor. **Failure to respond will result in abandonment of the application.** Any extensions of time will be governed by 37 C.F.R. § 1.136(a).

A grantable petition under 37 C.F.R. § 1.47(b) requires: (1) proof that the non-signing inventor cannot be reached or refuses to sign the oath or declaration after having been presented with the application papers (specification, claims and drawings); (2) an acceptable oath or declaration in compliance with 37 C.F.R. § 1.63; (3) the petition fee; (4) a statement of the last known address of the non-signing inventor; (5) proof that the Rule 47(b) applicant has sufficient proprietary interest in the subject matter to justify the filing of the application; and (6) proof of irreparable damage. The instant petition does not satisfy requirements (2), (5), and (6).

As to requirement (2), Rule 47 applicant has not submitted an oath or declaration. As set forth in MPEP 409.03(b), the "37 CFR 1.47(b) applicant must make the oath required by 37 CFR 1.63 and 1.64 or 1.175." The title or position of the person signing must be stated if signing on behalf of a corporation. A corporation may authorize any person, including a registered attorney or agent, to sign the oath or declaration on its behalf. Where an oath or declaration is signed by a registered attorney or agent on behalf of a corporation, proof of the attorney's or agent's authority in the form of a statement signed by the appropriate corporate officer must be submitted, or the attorney or agent can simply state that he or she is authorized to sign on behalf of the corporation.

As to requirement (5), applicant has not shown a sufficient proprietary interest with respect to the nonsigning inventor. Rule 47 applicant has not submitted a copy of an assignment from the non-signing inventor or a copy of an employment agreement.

If applicant can not show a sufficient proprietary interest by supplying a copy of the assignment for the above-identified application (or a copy of an agreement to assign, e.g. an employment agreement), a proprietary interest "may be demonstrated by an appropriate legal memorandum to the effect that a court of competent jurisdiction (federal, state, or foreign) would by the weight of authority in that jurisdiction award title of the invention to the 37 CFR 1.47(b) applicant."[1]

As to requirement (6), irreparable damage may be established by a statement that a filing date is necessary to preserve the rights of the party or to prevent irreparable damage. See MPEP 409.03(g).

Further correspondence with respect to this matter should be addressed as follows:

By mail: Mail Stop Petitions
Commissioner for Patents
P.O. Box 1450
Alexandria VA 22313-1450

By FAX: (571)273-8300
Attn: Office of Petitions

MPEP 409.03(f).

Telephone inquiries related to this decision may be directed to the undersigned at (571)272-3207.

Cliff Congo
Petitions Attorney
Office of Petitions

UNITED STATES PATENT AND TRADEMARK OFFICE

Commissioner for Patents
United States Patent and Trademark Office
P.O. Box 1450
Alexandria, VA 22313-1450
www.uspto.gov

VERIZON
PATENT MANAGEMENT GROUP
1320 NORTH COURT HOUSE ROAD
9TH FLOOR
ARLINGTON VA 22201-2909

MAILED

OCT 02 2009

OFFICE OF PETITIONS

In re Application of	:	
Ramakrishnan R. Sankaranarayan	:	
Application No. 12/056,728	:	ON PETITION
Filed: March 27, 2008	:	
Attorney Docket No. 20060345	:	

This is a decision on the renewed petition under 37 CFR 1.47(b), filed September 11, 2009.

The petition under 37 C.F.R. § 1.47(b) is **DISMISSED**.

Rule 47 applicant is given TWO MONTHS from the mailing date of this decision to reply, correcting the below-noted deficiencies. Any reply should be entitled "Request for Reconsideration of Petition Under 37 C.F.R. § 1.47(b)," and should only address the deficiencies noted below, except that the reply may include an oath or declaration executed by the non-signing inventor. **Failure to respond will result in abandonment of the application.** Any extensions of time will be governed by 37 C.F.R. § 1.136(a).

A grantable petition under 37 C.F.R. § 1.47(b) requires: (1) proof that the non-signing inventor cannot be reached or refuses to sign the oath or declaration after having been presented with the application papers (specification, claims and drawings); (2) an acceptable oath or declaration in compliance with 37 C.F.R. § 1.63; (3) the petition fee; (4) a statement of the last known address of the non-signing inventor; (5) proof that the Rule 47(b) applicant has sufficient proprietary interest in the subject matter to justify the filing of the application; and (6) proof of irreparable damage. The instant petition does not satisfy requirement (2).

As to requirement (2), Rule 47 applicant has not submitted a proper 37 CFR 1.63 declaration. The declaration does not set forth the identifying information for the non-signing inventor. As set forth in MPEP 409.03(b), "Where an application is executed by one other than the inventor, the declaration required by 37 CFR 1.63 must state the full name, residence, post office address, and citizenship of the nonsigning inventor. Also, the title or position of the person signing must be stated if signing on behalf of a corporation under 37 CFR 1.47(b)." Here, the declaration signed by Palmieri on behalf of the non-signing inventor only identifies the title of Palmieri - it does not identify the residence post office address, and citizenship of the non-signing inventor.

Further correspondence with respect to this matter should be addressed as follows:

By mail: Mail Stop Petitions
Commissioner for Patents
P.O. Box 1450
Alexandria VA 22313-1450

By FAX: (571)273-8300
Attn: Office of Petitions

Telephone inquiries related to this decision may be directed to the undersigned at (571)272-3207.

Cliff Congo
Petitions Attorney
Office of Petitions

UNITED STATES PATENT AND TRADEMARK OFFICE

Commissioner for Patents
United States Patent and Trademark Office
P.O. Box 1450
Alexandria, VA 22313-1450
www.uspto.gov

VERIZON
PATENT MANAGEMENT GROUP
1320 NORTH COURT HOUSE ROAD
9TH FLOOR
ARLINGTON VA 22201-2909

MAILED

NOV 19 2009

OFFICE OF PETITIONS

In re Application of	:	
Ramakrishnan R. Sankaranarayan	:	
Application No. 12/056,728	:	CORRECTED DECISION
Filed: March 27, 2008	:	
Attorney Docket No. 20060345	:	

This is a corrected decision on the renewed petition under 37 CFR 1.47(b), filed September 11, 2009.

The petition under 37 C.F.R. § 1.47(b) is **GRANTED**.

Applicant filed a petition under 37 CFR 1.47(b) on September 11, 2009. The petition was dismissed in a decision mailed on October 2, 2009. The decision incorrectly pointed out that the 37 CFR 1.63 declaration did not include the citizenship, residence, and post office address of the non-signing inventor.

A closer review of the declaration reveals that the citizenship, residence, and post office address of the non-signing inventor was indeed included at the top of the declaration.

The above-identified application and papers have been reviewed and found to be in compliance with 37 CFR 1.47(a). Accordingly, the above-identified application is hereby accorded Rule 1.47(a) status. As provided in 37 CFR 1.47(c), this Office will forward notice of this application's filing to the non-signing inventor at the address provided in the declaration. Notice of the filing of this application will also be published in the Official Gazette.

The application is being forwarded to the Office of Patent Application Processing for pre-examination processing.

Telephone inquiries related to this decision may be directed to the undersigned at (571)272-3207.

Cliff Congo
Petitions Attorney
Office of Petitions

UNITED STATES PATENT AND TRADEMARK OFFICE

Commissioner for Patents
United States Patent and Trademark Office
P.O. Box 1450
Alexandria, VA 22313-1450
www.uspto.gov

RAMAKRISHNAN R SANKARANARAYAN
1A FLAT 3C ORCHARD APARTMENTS
4T CROSS ST
UNITED INDIA COLONY KODAMBAKKAM
CHENNAI TAMILNADU 600022
INDIA

MAILED

NOV 18 2009

OFFICE OF PETITIONS

In re Application of :
Ramakrishnan R. Sankaranarayan :
Application No. 12/056,728 :
Filed: March 27, 2008 :
Title: Method and System for :
Providing Interactive Hyperlinked :
Video

LETTER

Dear Mr. Sankaranarayan:

You are named as the sole inventor in the above-identified United States patent application filed under the provisions of 35 USC 116 (United States Code) and 37 CFR 1.47(a), Rules of Practice in Patent Cases. Should a patent be granted on the application you will be designated therein as a joint inventor.

As the inventor, you are entitled to inspect any paper in the file wrapper of the application, order copies of all or any part thereof (at a prepaid cost per 37 CFR 1.19) or make your position of record in the application. Alternatively, you may arrange to do any of the preceding through a registered patent attorney or agent presenting written authorization from you. If you care to join the application, agent of record would presumably assist you. Joining in the application would entail the filing of an appropriate oath or declaration by you pursuant to 37 CFR 1.63.

Telephone inquiries regarding this communication should be directed to Petitions Attorney Cliff Congo at (571)272-3207. Requests for information regarding your application should be directed to the File Information Unit at (703) 308-2733. Information regarding how to pay for and order a copy of the application, or a specific paper in the application, should be directed to the Certification Division at (703) 308-9726 or 1-800-972-6382 (outside the Washington D.C. area).

Cliff Congo
Petitions Attorney
Office of Petitions

UNITED STATES PATENT AND TRADEMARK OFFICE

UNITED STATES DEPARTMENT OF COMMERCE
United States Patent and Trademark Office
Address: COMMISSIONER FOR PATENTS
P.O. Box 1450
Alexandria, Virginia 22313-1450
www.uspto.gov

APPLICATION NO.	FILING DATE	FIRST NAMED INVENTOR	ATTORNEY DOCKET NO.	CONFIRMATION NO.
12/056,732	03/27/2008	Xiaoliang Wang	ONDA-0016	1066

7590 06/01/2010
KNOBLE, YOSHIDA & DUNLEAVY
EIGHT PENN CENTER
SUITE 1350, 1628 JOHN F KENNEDY BLVD
PHILADELPHIA, PA 19103

EXAMINER
LETTMAN, BRYAN MATTHEW

ART UNIT	PAPER NUMBER
3746	

MAIL DATE	DELIVERY MODE
06/01/2010	PAPER

DECISION GRANTING PETITION UNDER 37 CFR 1.138(d)

The declaration of express abandonment is recognized

This is in response to the petition under 37 CFR 1.138(d), requesting for a refund of any previously paid search fee and excess claims fee in the above-identified application.

The petition is granted.

The express abandonment is recognized. Any previously paid search fee and excess claims fee are hereby refunded.

Telephone inquiries should be directed to the Office of Data Management at (571) 272-4200.

Betty Powell

Patent Publication Branch
Office of Data Management

FORM PET651G (Rev. 08/07)

UNITED STATES PATENT AND TRADEMARK OFFICE

Commissioner for Patents
United States Patent and Trademark Office
P.O. Box 1450
Alexandria, VA 22313-1450
www.uspto.gov

Thelen LLP
P.O. Box 640640
San Jose, CA 95164-0640

COPY MAILED

SEP 2 4 2008

OFFICE OF PETITIONS

In re Application of	:	
Robert Proctor, et al.	:	
Application No. 12/056,755	:	DECISION ON PETITION
Filed: March 27, 2008	:	TO WITHDRAW
Attorney Docket No. 650007-006	:	FROM RECORD
	:	

This is a decision on the Request to Withdraw as attorney or agent of record under 37 C.F.R. § 1.36(b), filed August 8, 2008.

The request is **APPROVED**.

A grantable request to withdraw as attorney/agent of record must be signed by every attorney/agent seeking to withdraw or contain a clear indication that one attorney is signing on behalf of another/others. A request to withdraw will not be approved unless at least 30 (thirty) days would remain between the date of approval and the later of the expiration date of a time to file a response or the expiration date of the maximum time period which can be extended under 37 C.F.R. § 1.136(a).

The request was signed by David B. Ritchie on behalf of all attorneys of record. All attorneys/agents have been withdrawn. Applicant is reminded that there is no attorney of record at this time.

The request to change the correspondence of record is not acceptable as the requested correspondence address is not that of: (1) the first named signing inventor; or (2) an intervening assignee of the entire interest under 37 C.F.R 3.71. All future communications from the Office will be directed to the first named signing inventor at the first copied address below until otherwise properly notified by the applicant.

There is no outstanding Office action at this time.

Telephone inquiries concerning this decision should be directed to Terri Williams at 571-272-2991.

Terri Williams
Petitions Examiner
Office of Petitions

cc: **Robert Proctor**
6 Lady Aster Court
Durham, NC 27712

cc: **Renesas Technology America, Inc.**
c/o Song Zhu, Squire, Sanders & Dempsey LLP
One Maritime Plaza, Suite 300
San Francisco, CA 94111

UNITED STATES PATENT AND TRADEMARK OFFICE

UNITED STATES DEPARTMENT OF COMMERCE
United States Patent and Trademark Office
Address: COMMISSIONER FOR PATENTS
P.O. Box 1450
Alexandria, Virginia 22313-1450
www.uspto.gov

APPLICATION NUMBER	FILING OR 371(C) DATE	FIRST NAMED APPLICANT	ATTY. DOCKET NO./TITLE
12/056,755	03/27/2008	Robert Proctor	650007-006

CONFIRMATION NO. 1113

POWER OF ATTORNEY NOTICE

58773
THELEN LLP
P.O. Box 640640
SAN JOSE, CA 95164-0640

OC000000032233870

Date Mailed: 09/23/2008

NOTICE REGARDING CHANGE OF POWER OF ATTORNEY

This is in response to the Power of Attorney filed 08/08/2008.

- The withdrawal as attorney in this application has been accepted. Future correspondence will be mailed to the new address of record. 37 CFR 1.33.

/tswilliams/

Office of Data Management, Application Assistance Unit (571) 272-4000, or (571) 272-4200, or 1-888-786-0101

UNITED STATES PATENT AND TRADEMARK OFFICE

Commissioner for Patents
United States Patent and Trademark Office
P.O. Box 1450
Alexandria, VA 22313-1450
www.uspto.gov

WATERS TECHNOLOGIES CORPORATION
C/O WATERS CORPORATION
34 MAPLE STREET - LG
MILFORD, MA 01757

MAILED

MAR 12 2009

OFFICE OF PETITIONS

In re Application of	:	
Chris **HUGHES**	:	
Application No. 12/056,762	:	DECISION ON PETITION
Filed: March 27, 2008	:	UNDER 37 CFR 1.137(b)
Attorney Docket No. **M-1274-03**	:	

This is a decision on the petition under 37 CFR 1.137(b), filed February 20, 2009, to revive the above-identified application.

The petition is **GRANTED**.

The application became abandoned for failure to reply in a timely manner to the Notice to File Corrected Application Papers mailed April 14, 2008. The Notice set a period for reply of two (2) months from the mail date of the Notice. No extensions of time under the provisions of 37 CFR 1.136(a) were obtained. Accordingly, the application became abandoned on June 15, 2008.

The petition satisfies the requirements of 37 CFR 1.137(b) in that petitioner has supplied (1) the reply in the form of corrected drawings; (2) the petition fee of $1620; and (3) an adequate statement of unintentional delay.

The application is being referred to the Office of Patent Application Processing for further pre-examination processing.

Telephone inquiries concerning this decision should be directed to Monica A. Graves at (571) 272-7253.

Brian W. Brown
Petitions Examiner
Office of Petitions

UNITED STATES PATENT AND TRADEMARK OFFICE

Commissioner for Patents
United States Patent and Trademark Office
P.O. Box 1450
Alexandria, VA 22313-1450
www.uspto.gov

MAILED

JUN 30 2010

OFFICE OF PETITIONS

WALL & TONG, LLP
IBM CORPORATION
595 SHREWSBURY AVE
SUITE 100
SHREWSBURY NJ 07702

In re Application of	:	
BULZACCHELLI et al.	:	
Application No. 12/056,788	:	DECISION ON PETITION
Filed: 03/27/2008	:	
Attorney Docket No. YOR920070086US1	:	

This is a decision on the "PETITION TO WITHDRAW HOLDING OF ABANDONMENT UNDER 38 C.F.R. §1.181(a) FOR FAILURE TO RECEIVE REQUIREMENT FOR STATEMENT UNDER §305(c) OF THE NATIONAL AERONAUTICS AND SPACE ACT" filed February 23, 2010. This is also a decision on the petition under 37 CFR 1.137(b), filed February 23, 2010, to revive the above-identified application.

On August 6, 2008, the Office mailed a REQUIREMENT FOR STATEMENT UNDER § 305(c) OF THE NATIONAL AERONAUTICS AND SPACE ACT, setting a period of thirty days from the mailing date of the letter to file the required statement under 42 U.S.C. § 2457(c) to avoid abandonment. The thirty-day period is fixed by § 2457(c) of the Act and cannot be extended. Thus, no extension of this period could be obtained under either 37 CFR § 1.136(a) or (b). As no timely reply was received in the USPTO, the application became abandoned and a Notice of Abandonment was mailed on October 29, 2008.

Petitioner asserts that the REQUIREMENT FOR STATEMENT UNDER § 305(c) OF THE NATIONAL AERONAUTICS AND SPACE ACT (Requirement) was not received at the correspondence address of record.

As to the petition under 37 CFR 1.181, a review of the written record indicates no irregularity in the mailing of the Requirement and in the absence of any irregularity, there is a strong presumption that the Office communication was properly mailed to the practitioner at the address of record on that date. This presumption may be overcome by a showing that the Requirement was not in fact received.

As stated in Section 711.03(c)(I)(A) of the Manual for Patent Examining Procedure:

> In Delgar v. Schulyer, 172 USPQ 513 (D.D.C. 1971), the court decided that the Office should mail a new Notice of Allowance in view of the evidence presented in support of the contention that the applicant's representative did not receive the original Notice of Allowance. Under the reasoning of Delgar, an allegation that an Office action was never received may be considered in a petition to withdraw the holding of abandonment. If adequately supported, the Office may grant the petition to withdraw the holding of abandonment and remail the Office action. That is, the reasoning of Delgar is applicable regardless of whether an application is held abandoned for failure to timely pay the issue fee (35 U.S.C. 151) or for failure to prosecute (35 U.S.C. 133).
>
> To minimize costs and burdens to practitioners and the Office, the Office has modified the showing required to establish nonreceipt of an Office action. The showing required to establish nonreceipt of an Office communication must include a statement from the practitioner describing the system used for recording an Office action received at the correspondence address of record with the USPTO. The statement should establish that the docketing system is sufficiently reliable. It is expected that the record would include, but not be limited to, the application number, attorney docket number, the mail date of the Office action and the due date for the response.
>
> Practitioner must state that the Office action was not received at the correspondence address of record, and that a search of the practitioner's record(s), including any file jacket or the equivalent, and the application contents, indicates that the Office action was not received. A copy of the record(s) used by the practitioner where the non-received Office action would have been entered had it been received is required.
>
> A copy of the practitioner's record(s) required to show non-receipt of the Office action should include the master docket for the firm. That is, if a three month period for reply was set in the nonreceived Office action, a copy of the master docket report showing all replies docketed for a date three months from the mail date of the nonreceived Office action must be submitted as documentary proof of nonreceipt of the Office action. If no such master docket exists, the practitioner should so state and provide other evidence such as, but not limited to, the following: the application file jacket; incoming mail log; calendar; reminder system; or the individual docket record for the application in question.
>
> The showing outlined above may not be sufficient if there are circumstances that point to a conclusion that the Office action may have been lost after receipt rather than a conclusion that the Office action was lost in the mail (e.g., if the practitioner has a history of not receiving Office actions).

On petition, petitioners submitted a declaration from the firm's Docketing Administrator, describing the system used for recording correspondence from the USTPO, and attesting to the fact that a search of the file jacket and docket records indicated that the Requirement was not received from the USPTO. However, the showing required to establish non-receipt of an Office communication must include a statement from the practitioner describing the system used for recording an Office action received at

the correspondence address of record with the USPTO. Furthermore, the practitioner must state that the Office action was not received at the correspondence address of record, and that a search of the practitioner's record(s), including any file jacket or the equivalent, and the application contents, indicates that the Office action was not received. Lastly, petitioners did not provide a copy of a master docket report nor did the practitioner state whether such a master docket report exists. As petitioners failed to meet the required showing under 37 CFR 1.181 to withdraw the holding of abandonment for non-receipt of an Office action, the petition is **dismissed**.

As to the petition under 37 CFR 1.137(b), petitioners have satisfied the requirements of 37 CFR 1.137(b) in that petitioners have supplied (1) the required reply, (2) an authorization to charge the petition fee, and (3) a proper statement of unintentional delay. Accordingly, the petition under 37 CFR 1.137(b) is **granted**.

The $1,620.00 fee for filing the present petition under 37 CFR 1.137(b) will be charged to the Deposit Account as authorized.

This application is being referred to Technology Center AU 2827 for appropriate action.

Telephone inquiries concerning this decision should be directed to the undersigned at (571) 272-3211.

Christina Tartera Donnell

Christina Tartera Donnell
Senior Petitions Attorney
Office of Petitions

UNITED STATES PATENT AND TRADEMARK OFFICE

Commissioner for Patents
United States Patent and Trademark Office
P.O. Box 1450
Alexandria, VA 22313-1450
www.uspto.gov

COPY MAILED

JAN 3 0 2009

OFFICE OF PETITIONS

LOWRIE, LANDO & ANASTASI, LLP
ONE MAIN STREET, SUITE 1100
CAMBRIDGE MA 02142

In re Application of
Daniel Patrick Leary
Application No. 12/056,791
Filed: March 27, 2008
Attorney Docket No. P2026-700070

DECISION ON PETITION

This is a decision on the petition under the unintentional provisions of 37 CFR 1.137(b), filed December 22, 2008, to revive the above-identified application.

The petition is **GRANTED**.

This application became abandoned for failure to timely file corrected drawings on or before June 16, 2008, as required by the Notice to File Corrected Application Papers, mailed April 16, 2008. Accordingly, the date of abandonment of this application is June 17, 2008.

The petition satisfies the requirements of 37 CFR 1.137(b) in that petitioner has supplied (1) the reply in the form of 13 sheets of replacement drawings (Figs 1-13); (2) the petition fee of $810; and (3) a proper statement of unintentional delay.

Telephone inquiries concerning this decision should be directed to Denise Williams at (571) 272-8930.

This application is being referred to the Office of Patent Application Processing for processing into a patent.

Brian W. Brown
Petitions Examiner
Office of Petitions

UNITED STATES PATENT AND TRADEMARK OFFICE

Commissioner for Patents
United States Patent and Trademark Office
P.O. Box 1450
Alexandria, VA 22313-1450
www.uspto.gov

ALLEMAN HALL MCCOY RUSSELL & TUTTLE, LLP
806 S.W. BROADWAY, SUITE 600
PORTLAND OR 97205

MAILED

JUN 28 2010

OFFICE OF PETITIONS

Applicants: Timothy Alan Mouch
Appl. No.: 12/056,821
Filing Date: March 27, 2008
Title: In-Line Electro-Mechanical Modulating Device to Modulate Fuel Flow in Fuel Rails to Reduce Noise
Attorney Docket: 81175060
Pub. No.: US 2009/0241901 A1
Pub. Date: October 1, 2009

This is a decision on the request for a corrected patent application publication under 37 CFR 1.221(b), received on November 30, 2009, for the above-identified application.

Applicant requests that the application be republished because the patent application publication contains a material error in the drawings wherein the application was published with the incorrect set of drawings.

The request is granted.

The corrected patent application publication will be published in due course, unless the patent issues before the application is republished.

It would greatly benefit the Office if **applicant did not provide copies of papers**, which were previously submitted and/or **a complete copy of the pre-grant publication**, as it unnecessarily increases the cost to the Office. See 37 CFR 1.4(b). A request for corrected publication need only point out what was printed incorrectly in the application, where the error occurs in the publication and where the correct text or drawing is found in the application papers, Marked up Relevant copies of the applications papers and the pre-grant publication may facilitate processing of the request, where it is not readily apparent where the error occurs. If it is not clear why the error is a material error, further explanation may be warranted.

The drawings received by the Office on April 16, 2008, which were scanned into this application and published have been removed.

Inquiries relating to this matter may be directed to Mark Polutta at (571) 272-7709.

Mark Polutta
Senior Legal Advisor
Office of Patent Legal Administration
Office of the Deputy Commissioner
for Patent Examination Policy

UNITED STATES PATENT AND TRADEMARK OFFICE

Commissioner for Patents
United States Patent and Trademark Office
P.O. Box 1450
Alexandria, VA 22313-1450
www.uspto.gov

Fitch Even Tabin & Flannery
120 South LaSalle Street
Suite 1600
Chicago, IL 60603-3406

MAILED

MAR 03 2010

OFFICE OF PETITIONS

In re Application of	:	
Matthew Carl Hamilton et al.	:	
Application No. 12/056,846	:	DECISION ON PETITION
Filed: March 27, 2008	:	TO WITHDRAW
Attorney Docket No. GUIDP008	:	FROM RECORD
	:	

This is a decision on the Request to Withdraw as attorney or agent of record under 37 C.F.R. § 1.36(b), filed December 23, 2009.

The request is **moot because a revocation of power of attorney has been filed**.

A review of the file record indicates that the power of attorney to Fitch Even Tabin & Flannery and all attorneys/agents associated with customer number 22242 have been revoked by the assignee of the patent application on February 12, 2010. Accordingly, the request to withdraw under 37 C.F.R. § 1.36(b) is moot.

All future communications from the Office will continue to be directed to the below listed until otherwise notified by applicant.

Telephone inquires concerning this decision should be directed to Kimberly Inabinet at 571-272-4618.

/Kimberly Inabinet/

Kimberly Inabinet
Petitions Examiner
Office of Petitions

cc: Van Pelt, Yi & James, LLP
10050 N. Foothill Boulevard #200
Cupertino, CA 95014

UNITED STATES PATENT AND TRADEMARK OFFICE

UNITED STATES DEPARTMENT OF COMMERCE
United States Patent and Trademark Office
Address: COMMISSIONER FOR PATENTS
P.O. Box 1450
Alexandria, Virginia 22313-1450
www.uspto.gov

APPLICATION NO.	FILING DATE	FIRST NAMED INVENTOR	ATTORNEY DOCKET NO.	CONFIRMATION NO.
12/056,900	03/27/2008	DANIEL COHEN	G-053US18DIV	1349

7590 12/09/2008
SALIWANCHIK LLOYD & SALIWANCHIK
A PROFESSIONAL ASSOCIATION
PO BOX 142950
GAINESVILLE, FL 32614-2950

EXAMINER
CHERNYSHEV, OLGA N

ART UNIT	PAPER NUMBER
1649	

MAIL DATE	DELIVERY MODE
12/09/2008	PAPER

DECISION GRANTING PETITION UNDER 37 CFR 1.138(d)

The declaration of express abandonment is recognized

This is in response to the petition under 37 CFR 1.138(d), requesting for a refund of any previously paid search fee and excess claims fee in the above-identified application.

The petition is granted.

The express abandonment is recognized. Any previously paid search fee and excess claims fee are hereby refunded.

Telephone inquiries should be directed to the Office of Data Management at (571) 272-4200.

Betty Powell

Patent Publication Branch
Office of Data Management

```
Adjustment date: 12/09/2008  BPOWELL
03/28/2008 INTEFSW  00001678 12056900
02 FC:1111                    -510.00 OP
05 FC:1201                    -210.00 OP
```

```
Refund Ref:
12/09/2008          0030064402
-----------------------------------------

Credit Card Refund Total:      $660.00

Am Exp..: XXXXXXXXXXX1003
```


FORM PET651G (Rev. 08/07)

UNITED STATES PATENT AND TRADEMARK OFFICE

UNITED STATES DEPARTMENT OF COMMERCE
United States Patent and Trademark Office
Address: COMMISSIONER FOR PATENTS
P.O. Box 1450
Alexandria, Virginia 22313-1450
www.uspto.gov

APPLICATION NO.	FILING DATE	FIRST NAMED INVENTOR	ATTORNEY DOCKET NO.	CONFIRMATION NO.
12/056,926	03/27/2008	George M. Blue	GB920080086US1 (3030)	1395

78290 7590 07/08/2008
Oppenheimer Wolff & Donnelly LLP
Plaza VII, Suite 3300
45 South Seventh Street
Minneapolis, MN 55402-1609

EXAMINER
CALDWELL, ANDREW T

ART UNIT	PAPER NUMBER
2142	

MAIL DATE	DELIVERY MODE
07/08/2008	PAPER

Please find below and/or attached an Office communication concerning this application or proceeding.

The time period for reply, if any, is set in the attached communication.

UNITED STATES PATENT AND TRADEMARK OFFICE

Commissioner for Patents
United States Patent and Trademark Office
P.O. Box 1450
Alexandria, VA 22313-1450
www.uspto.gov

Oppenheimer Wolff & Donnelly LLP
Plaza VII, Suite 3300
45 South Seventh Street
Minneapolis MN 55402-1609

In re Application of: George M. Blue et al. Serial No.: 12/056,926 Filed: March 27, 2008 Docket: GB920080086US1 (3030) Title: USING A PROXY TO REDIRECT DOWNLOADS	DECISION ON PETITION TO MAKE SPECIAL FOR NEW APPLICATION UNDER 37 C.F.R. § 1.102 & M.P.E.P. § 708.02

This is a decision on the petition filed on March 27, 2008 to make the above- identified application special for accelerated examination procedure under 37 C.F.R. § 1.102(d), and the Supplemental Examination Support document filed July 2, 2008.

The petition to make the application special is GRANTED.

The application is eligible for accelerated examination and the petition complies with the conditions for granting the application special status pursuant to the "Change to Practice for Petitions in Patent Applications to Make Special and for Accelerated Examination" published June 26, 2006, in the Federal Register. (71 Fed. Reg. 36323).

The prosecution of the instant application will be conducted expeditiously according to the following guidelines.

1. The application will be docketed to an examiner and taken up for action within two weeks of the date of this decision.

2. Restriction Practice:
   If the examiner determines that the claims are not directed to a single invention, a telephone request to elect one single invention will be made pursuant to MPEP 812.01. As a prerequisite to the grant of this petition, the applicant has agreed to make an oral election, by telephone, without traverse. If the applicant refuses to make an election without traverse, or the examiner cannot reach the applicant after a reasonable effort, the

examiner will treat the first claimed invention (invention defined by claim 1) as having being constructively elected without traverse for examination.

3. Office action:
If it is determined that, after appropriate consultation, there is a potential rejection or any other issue to be addressed, the examiner will telephone the applicant and arrange an interview to discuss and resolve the issue. An Office action, other than a Notice of Allowance and Fee(s) Due (Notice of Allowance), will not be issued unless either: 1) an interview was conducted but did not result in agreed to action that places the application in condition for allowance, or, 2) a determination is made that an interview would be unlikely to result in the application being placed in condition for allowance, and 3) an internal conference has been held to review any rejection of any claim.

4. Time for Reply:
An Office action other than a Notice of Allowance or a final Office action will set a shortened statutory period of one month or thirty days, whichever is longer, for reply with no extension of time available under 37 CFR 1.136(a). Failure to timely file a reply within this non-extendible period for reply will result in the abandonment of the application.

5. Reply by Applicant:
A timely reply to an Office action other than the Notice of Allowance must be submitted electronically via EFS or EFS-web and limited to addressing the rejections, objections and requirement made. Any amendment that attempts to: 1) add claims which would result in more than three pending independent claims or more than twenty pending total claims; 2) present claims not encompassed by the pre-examination search or an updated accelerated examination support document; or 3) present claims that are directed a non-elected invention or an invention other than that previously claimed and examined in the application, will be treated as not fully responsive and will not be entered.

   For any amendment to the claims (including any new claim) that is not encompassed by the accelerated examination support document, applicant must provide an updated accelerated examination support document that encompasses the amended or new claims at the time of filing of the amendment.

   To proceed expeditiously with the examination, it is recommended that a reply with amendments made to any claim or with any new claim being added be accompanied by an updated accelerated examination support document or a statement explaining how the amended or new claim is supported by the original accelerated examination support document.

6. Information Disclosure Statement (IDS):
Any IDS filed during prosecution must be submitted electronically via EFS or EFS-web, accompanied by an updated accelerated examination support document, and be in compliance with 37 CFR 1.97 and 1.98.

7. Post-Allowance Processing:
   To expedite processing of the allowed application into a patent, the applicant must: 1) pay the required fees within one month of the date of the Notice of Allowance, and 2) not file any post allowance papers not required by the Office. In no event may the issue fee be paid and accepted later than three months from the date of the Notice of Allowance.

8. After-Final and Appeal Procedures:
   To expedite prosecution, after receiving the final Office action, applicant must: 1) promptly file a notice of appeal, an appeal brief and appeal fees; and 2) not request a pre-appeal brief conference.

   Any amendment, affidavit or other evidence filed after final Office action must comply with applicable rules and the requirements outlined in numbered paragraphs 5 and 6 above.

   On appeal, the application will proceed according to normal appeal procedures. After appeal, the application will again be treated special.

9. Proceedings Outside the Normal Examination Process:
   If the application becomes involved in a proceeding that is outside the normal examination process (e.g., a secrecy order, national security review, interference proceeding, petitions under 37 CFR 1.181, 182 or 183), the application will be treated special before and after such proceeding.

10. Final Disposition:
    The twelve month goal of this accelerated examination procedure ends with a final disposition. The mailing of a final Office action, a Notice of Allowance, the filing of a Notice of Appeal, or the filing of a Request for Continued Examination (RCE) is the final disposition.

If, during prosecution, a paper is not filed electronically using EFS-web, a reply is filed but is not fully responsive, the application is involved in an appeal, or a proceeding outside normal examination process, the application will still be examined expeditiously, however, the final disposition may occur more than twelve months from the filing of the application.

Any inquiry regarding this decision should be directed to Kakali Chaki, Quality Assurance Specialist, at (571) 272-3719.

/Kakali Chaki/

Kakali Chaki, Quality Assurance Specialist
Technology Center 2100

UNITED STATES PATENT AND TRADEMARK OFFICE

Commissioner for Patents
United States Patent and Trademark Office
P.O. Box 1450
Alexandria, VA 22313-1450
www.uspto.gov

COPY MAILED
DEC 08 2009
OFFICE OF PETITIONS

J C PATENTS
4 VENTURE, SUITE 250
IRVINE CA 92618

In re Application of	:	
Chien-Hua CHU et al.	:	
Application No. 12/056,949	:	NOTICE
Filed: March 27, 2008	:	
Attorney Docket No. **JCLA25473**	:	

This is a notice regarding your request for acceptance of a fee deficiency submission under 37 CFR 1.28.

The Office no longer investigates or rejects original or reissue applications under 37 CFR 1.56. **1098 Off. Gaz. Pat. Office 502 (January 3, 1989)**. Therefore, nothing in this Notice is intended to imply that an investigation was done.

Your fee deficiency submission under 37 CFR 1.28 is hereby **ACCEPTED**.

This application is no longer entitled to small entity status. Accordingly, all future fees paid in this application must be paid at the large entity rate.

Inquiries related to this communication should be directed to Tredelle Jackson at (571) 272-2783.

Ramesh Krishnamurthy

Ramesh Krishnamurthy
Petitions Examiner
Office of Petitions

PTO/SB/130 (03-08)
Approved for use through 03/31/2008. OMB 0651- 0031
U.S. Patent and Trademark Office; U.S. DEPARTMENT OF COMMERCE
Under the Paperwork Reduction Act of 1995, no persons are required to respond to a collection of information unless it contains a valid OMB control number

PETITION TO MAKE SPECIAL BASED ON AGE FOR ADVANCEMENT OF EXAMINATION UNDER 37 CFR 1.102(c)(1)

Application Information

Application Number	12056965	Confirmation Number	1470	Filing Date	2008-03-27
Attorney Docket Number (optional)	RG71016-1	Art Unit		Examiner	
First Named Inventor	Gray, Ronald E.				
Title of Invention	Combination Digging Implement and Valuables Container				

Attention: Office of Petitions

An application may be made special for advancement of examination upon filing of a petition showing that the applicant is 65 years of age, or more. No fee is required with such a petition. See 37 CFR 1.102(c)(1) and MPEP 708.02 (IV).

APPLICANT HEREBY PETITIONS TO MAKE SPECIAL FOR ADVANCEMENT OF EXAMINATION IN THIS APPLICATION UNDER 37 CFR 1.102(c)(1) and MPEP 708.02 (IV) ON THE BASIS OF THE APPLICANT'S AGE.

A grantable petition requires one of the following items:
(1) Statement by one named inventor in the application that he/she is 65 years of age, or more; or
(2) Certification by a registered attorney/agent having evidence such as a birth certificate, passport, driver's license, etc. showing one named inventor in the application is 65 years of age, or more.

Name of Inventor who is 65 years of age, or older

Given Name	Middle Name	Family Name	Suffix
Ronald	E.	Gray	

A signature of the applicant or representative is required in accordance with 37 CFR 1.33 and 10.18.
Please see 37 CFR 1.4(d) for the format of the signature.

Select (1) or (2) :

○ (1) I am an inventor in this application and I am 65 years of age, or more.

◉ (2) I am an attorney or agent registered to practice before the Patent and Trademark Office, and I certify that I am in possession of evidence, and will retain such in the application file record, showing that the inventor listed above is 65 years of age, or more.

Signature	/Kevin Prince/	Date (YYYY-MM-DD)	2008-03-27
Name	Kevin Prince	Registration Number	57207

PTO/SB/130 (03-08)
Approved for use through 03/31/2008. OMB 0651- 0031
U.S. Patent and Trademark Office; U.S. DEPARTMENT OF COMMERCE
Under the Paperwork Reduction Act of 1995, no persons are required to respond to a collection of information unless it contains a valid OMB control number

Privacy Act Statement

The Privacy Act of 1974 (P.L. 93-579) requires that you be given certain information in connection with your submission of the attached form related to a patent application or patent. Accordingly, pursuant to the requirements of the Act, please be advised that: (1) the general authority for the collection of this information is 35 U.S.C. 2(b)(2); (2) furnishing of the information solicited is voluntary; and (3) the principal purpose for which the information is used by the U.S. Patent and Trademark Office is to process and/or examine your submission related to a patent application or patent. If you do not furnish the requested information, the U.S. Patent and Trademark Office may not be able to process and/or examine your submission, which may result in termination of proceedings or abandonment of the application or expiration of the patent.

The information provided by you in this form will be subject to the following routine uses:

1. The information on this form will be treated confidentially to the extent allowed under the Freedom of Information Act (5 U.S.C. 552) and the Privacy Act (5 U.S.C. 552a). Records from this system of records may be disclosed to the Department of Justice to determine whether the Fr eedom of Information Act requires disclosure of these records.

2. A record from this system of records may be disclosed, as a routine use, in the course of presenting evidence to a court, magistrate, or administrative tribunal, including disclosures to opposing counsel in the course of settlement negotiations.

3. A record in this system of records may be disclosed, as a routine use, to a Member of Congress submitting a request involving an individual, to whom the record pertains, when the individual has requested assistance from the Member with respect to the subject matter of the record.

4. A record in this system of records may be disclosed, as a routine use, to a contractor of the Agency having need for the information in order to perform a contract. Recipients of information shall be required to comply with the requirements of the Privacy Act of 1974, as amended, pursuant to 5 U.S.C. 552a(m).

5. A record related to an International Application filed under the Patent Cooperation Treaty in this system of records may be disclosed, as a routine use, to the International Bureau of the World Intellectual Property Organization, pursuant to the Patent Cooperation Treaty.

6. A record in this system of records may be disclosed, as a routine use, to another federal agency for purposes of National Security review (35 U.S.C. 181) and for review pursuant to the Atomic Energy Act (42 U.S.C. 218(c)).

7. A record from this system of records may be disclosed, as a routine use, to the Administrator, General Services, or his/her designee, during an inspection of records conducted by GSA as part of that agency's responsibility to recommend improvements in records management practices and programs, under authority of 44 U.S.C. 2904 and 2906. Such disclosure shall be made in accordance with the GSA regulations governing inspection of records for this purpose, and any other relevant (i.e., GSA or Commerce) directive. Such disclosure shall not be used to make determinations about indivi duals.

8. A record from this system of records may be disclosed, as a routine use, to the public after either publication of the application pursuant to 35 U.S.C. 122(b) or issuance of a patent pursuant to 35 U.S.C. 151. Further, a record may be disclosed, subject to the limitations of 37 CFR 1.14, as a routine use, to the public if the record was filed in an application which became abandoned or in which the proceedings were terminated and which application is referenced by either a published application, an application open to public inspections or an issued patent.

9. A record from this system of records may be disclosed, as a routine use, to a Federal, State, or local law enforcement agency, if the USPTO becomes aware of a violation or potential violation of law or regulation.

UNITED STATES PATENT AND TRADEMARK OFFICE

Commissioner for Patents
United States Patent and Trademark Office
P.O. Box 1450
Alexandria, VA 22313-1450
www.uspto.gov

In re Application of :
Ronald E. Gray :

Application No. 12056965 :DECISION ON PETITION TO MAKE SPECIAL
Filed: :UNDER 37 CFR 1.102(c)(1)
:

Attorney Docket No. RG71016-1

This is a decision on the electronic petition under 37 CFR 1.102 (c)(1) ,filed 27-MAR-2008 to make the above-identified application special based on applicant's age as set forth in MPEP § 708.02, Section IV.

The petition is **GRANTED**.

A grantable petition to make an application special under 37 CFR 1.102(c)(1), MPEP § 708.02, Section IV: Applicant's Age must include a statement by applicant or a registered practitioner having evidence that applicant is at least 65 years of age. No fee is required.

Accordingly, the above-identified application has been accorded “special” status and will be taken up for action by the examiner upon the completion of all pre-examination processing.

Telephone inquires concerning this electronic decision should be directed to the Electronic Business Center at 866-217-9197.

All other inquires concerning either the examination or status of the application should be directed to the Technology Center.

UNITED STATES PATENT AND TRADEMARK OFFICE

UNITED STATES DEPARTMENT OF COMMERCE
United States Patent and Trademark Office
Address: COMMISSIONER FOR PATENTS
P.O. Box 1450
Alexandria, Virginia 22313-1450
www.uspto.gov

APPLICATION NO.	FILING DATE	FIRST NAMED INVENTOR	ATTORNEY DOCKET NO.	CONFIRMATION NO.
12/056,974	03/27/2008	John J. R. Scott	GB920070120US1 (21582)	1489

48233 7590 07/08/2008
SCULLY, SCOTT, MURPHY & PRESSER, P.C.
400 GARDEN CITY PLAZA
SUITE 300
GARDEN CITY, NY 11530

EXAMINER

ART UNIT	PAPER NUMBER
2176	

MAIL DATE	DELIVERY MODE
07/08/2008	PAPER

Please find below and/or attached an Office communication concerning this application or proceeding.

The time period for reply, if any, is set in the attached communication.

UNITED STATES PATENT AND TRADEMARK OFFICE

Commissioner for Patents
United States Patent and Trademark Office
P.O. Box 1450
Alexandria, VA 22313-1450
www.uspto.gov

SCULLY, SCOTT, MURPHY & PRESSER, P.C.
400 GARDEN CITY PLAZA
SUITE 300
GARDEN CITY NY 11530

In re Application of: John J. R. Scott Serial No.: 12/056,974 Filed: March 27, 2008 Docket: GB920070120US1 (21582) Title: HIGHLIGHT LINKED-TO DOCUMENT SECTIONS FOR INCREASED READABILITY	DECISION ON PETITION TO MAKE SPECIAL FOR NEW APPLICATION UNDER 37 C.F.R. § 1.102 & M.P.E.P. § 708.02

This is a decision on the petition filed on March 27, 2008 to make the above- identified application special for accelerated examination procedure under 37 C.F.R. § 1.102(d).

The petition to make the application special is GRANTED.

The application is eligible for accelerated examination and the petition complies with the conditions for granting the application special status pursuant to the "Change to Practice for Petitions in Patent Applications to Make Special and for Accelerated Examination" published June 26, 2006, in the Federal Register. (71 Fed. Reg. 36323).

The prosecution of the instant application will be conducted expeditiously according to the following guidelines.

1. The application will be docketed to an examiner and taken up for action within two weeks of the date of this decision.

2. Restriction Practice:
   If the examiner determines that the claims are not directed to a single invention, a telephone request to elect one single invention will be made pursuant to MPEP 812.01. As a prerequisite to the grant of this petition, the applicant has agreed to make an oral election, by telephone, without traverse. If the applicant refuses to make an election without traverse, or the examiner cannot reach the applicant after a reasonable effort, the

examiner will treat the first claimed invention (invention defined by claim 1) as having being constructively elected without traverse for examination.

3. Office action:
If it is determined that, after appropriate consultation, there is a potential rejection or any other issue to be addressed, the examiner will telephone the applicant and arrange an interview to discuss and resolve the issue. An Office action, other than a Notice of Allowance and Fee(s) Due (Notice of Allowance), will not be issued unless either: 1) an interview was conducted but did not result in agreed to action that places the application in condition for allowance, or, 2) a determination is made that an interview would be unlikely to result in the application being placed in condition for allowance, and 3) an internal conference has been held to review any rejection of any claim.

4. Time for Reply:
An Office action other than a Notice of Allowance or a final Office action will set a shortened statutory period of one month or thirty days, whichever is longer, for reply with no extension of time available under 37 CFR 1.136(a). Failure to timely file a reply within this non-extendible period for reply will result in the abandonment of the application.

5. Reply by Applicant:
A timely reply to an Office action other than the Notice of Allowance must be submitted electronically via EFS or EFS-web and limited to addressing the rejections, objections and requirement made. Any amendment that attempts to: 1) add claims which would result in more than three pending independent claims or more than twenty pending total claims; 2) present claims not encompassed by the pre-examination search or an updated accelerated examination support document; or 3) present claims that are directed a non-elected invention or an invention other than that previously claimed and examined in the application, will be treated as not fully responsive and will not be entered.

   For any amendment to the claims (including any new claim) that is not encompassed by the accelerated examination support document, applicant must provide an updated accelerated examination support document that encompasses the amended or new claims at the time of filing of the amendment.

   To proceed expeditiously with the examination, it is recommended that a reply with amendments made to any claim or with any new claim being added be accompanied by an updated accelerated examination support document or a statement explaining how the amended or new claim is supported by the original accelerated examination support document.

6. Information Disclosure Statement (IDS):
Any IDS filed during prosecution must be submitted electronically via EFS or EFS-web, accompanied by an updated accelerated examination support document, and be in compliance with 37 CFR 1.97 and 1.98.

7. Post-Allowance Processing:
   To expedite processing of the allowed application into a patent, the applicant must: 1) pay the required fees within one month of the date of the Notice of Allowance, and 2) not file any post allowance papers not required by the Office. In no event may the issue fee be paid and accepted later than three months from the date of the Notice of Allowance.

8. After-Final and Appeal Procedures:
   To expedite prosecution, after receiving the final Office action, applicant must: 1) promptly file a notice of appeal, an appeal brief and appeal fees; and 2) not request a pre-appeal brief conference.

   Any amendment, affidavit or other evidence filed after final Office action must comply with applicable rules and the requirements outlined in numbered paragraphs 5 and 6 above.

   On appeal, the application will proceed according to normal appeal procedures. After appeal, the application will again be treated special.

9. Proceedings Outside the Normal Examination Process:
   If the application becomes involved in a proceeding that is outside the normal examination process (e.g., a secrecy order, national security review, interference proceeding, petitions under 37 CFR 1.181, 182 or 183), the application will be treated special before and after such proceeding.

10. Final Disposition:
    The twelve month goal of this accelerated examination procedure ends with a final disposition. The mailing of a final Office action, a Notice of Allowance, the filing of a Notice of Appeal, or the filing of a Request for Continued Examination (RCE) is the final disposition.

If, during prosecution, a paper is not filed electronically using EFS-web, a reply is filed but is not fully responsive, the application is involved in an appeal, or a proceeding outside normal examination process, the application will still be examined expeditiously, however, the final disposition may occur more than twelve months from the filing of the application.

Any inquiry regarding this decision should be directed to Kakali Chaki, Quality Assurance Specialist, at (571) 272-3719.

/Kakali Chaki/

Kakali Chaki, Quality Assurance Specialist
Technology Center 2100

UNITED STATES PATENT AND TRADEMARK OFFICE

UNITED STATES DEPARTMENT OF COMMERCE
United States Patent and Trademark Office
Address: COMMISSIONER FOR PATENTS
P.O. Box 1450
Alexandria, Virginia 22313-1450
www.uspto.gov

APPLICATION NO.	FILING DATE	FIRST NAMED INVENTOR	ATTORNEY DOCKET NO.	CONFIRMATION NO.
12/057,008	03/27/2008	Ming-Hung Huang	250351-1030	1553

7590 03/01/2010
THOMAS, KAYDEN, HORSTEMEYER & RISLEY, LLP
600 GALLERIA PARKWAY, S.E.
STE 1500
ATLANTA, GA 30339-5994

EXAMINER
CROWELL, ANNA M

ART UNIT	PAPER NUMBER
1792	

MAIL DATE	DELIVERY MODE
03/01/2010	PAPER

DECISION GRANTING PETITION UNDER 37 CFR 1.138(d)

The declaration of express abandonment is recognized

This is in response to the petition under 37 CFR 1.138(d), requesting for a refund of any previously paid search fee and excess claims fee in the above-identified application.

The petition is granted.

The express abandonment is recognized. Any previously paid search fee and excess claims fee are hereby refunded.

Telephone inquiries should be directed to the Office of Data Management at (571) 272-4200.

Niomi Farmer

Patent Publication Branch
Office of Data Management

Refund Ref:
03/01/2010 0032020526

Credit Card Refund Total: $510.00

Adjustment date: 03/01/2010 NFARMER
03/28/2008 INTEFSW 00302369 12057008
02 FC:1111 -510.00 OP

FORM PET651G (Rev. 08/07)

UNITED STATES PATENT AND TRADEMARK OFFICE

Commissioner for Patents
United States Patent and Trademark Office
P.O. Box 1450
Alexandria, VA 22313-1450
www.uspto.gov

STERNE, KESSLER, GOLDSTEIN & FOX P.L.L.C.
1100 NEW YORK AVENUE, N.W.
WASHINGTON DC 20005

COPY MAILED

SEP 23 2008

OFFICE OF PETITIONS

In re Application of
Garcia, et al. :
Application No.: 12/057,015 :
Filed: March 27, 2008 :
Attorney Docket No.: 2222.539000S :
For: METHODS AND SYSTEMS FOR PROVIDING ACCESS CONTROL TO SECURED DATA

ON PETITION

This is a decision on the petition under 37 CFR 1.47(a), filed August 18, 2008.

The petition is **DISMISSED**.

Any request for reconsideration of this decision must be submitted within TWO (2) MONTHS from the mail date of this decision. Extensions of time under 37 CFR 1.136(a) are permitted. Any response should be entitled "Request for Reconsideration of Petition Under 37 CFR 1.47(a)" and may include an oath or declaration executed by the inventor. **Failure to respond will result in abandonment of the application.**

A grantable petition under 37 CFR 1.47(a) requires:

(1) a petition including proof of the pertinent facts establishing that the joint inventor(s) refuses to join, or cannot be found or reached after diligent effort,
(2) a proper oath or Declaration executed by the available joint inventor(s),
(3) the petition fee of $200, and
(4) the last known address of the omitted inventor(s).

This petition lacks item (2) above.

As to item (2), an oath or declaration for the patent application in compliance with 37 CFR 1.63 and 1.64 still has not been presented. The declaration contains a non-dated, non-initialed alteration to information for Inventor Klimenty Vainstein. 37 CFR 1.52(c) states that "[a]ny interlineation, erasure, cancellation or other alteration of the application papers filed should be made on or before the signing of the accompanying oath or declaration pursuant to 1.63...." This

includes the oath or declaration. The Office will not consider whether non-initialed and/or non-dated alterations were made before or after signing of the oath or declaration but will require a new oath or declaration. MPEP605.04(a)

Fortunately, the alteration is to information for a signing inventor. Thus, pursuant to 37 CFR 1.67(a)(2), Inventor Vainstein may correct his/her information in a supplemental declaration identifying the entire inventive entity and their information, but signed only by him/her.

An oath or declaration in compliance with 37 CFR 1.63 and1.64 signed by the Rule 1.47 applicant on behalf of the non-signing inventor is REQUIRED. See MPEP 409.03(a).

Regarding fees, applicants submitted a petition for a one month extension of time on August 18, 2008. A Notice to File Missing Parts of Nonprovisional Application was mailed on April 17, 2008. It set a two month extendable period for response. Applicants responded to the Notice on August 18, 2008. Thus, a two month extension of time was required to make the August 18, 2008 reply timely filed. Deposit account no. 19-0036 will be charged $340.00. ($460.00 due - $120.00 previously paid.)

Further correspondence with respect to this matter should be addressed as follows:

By mail: Mail Stop PETITION
Commissioner for Patents
Post Office Box 1450
Alexandria, VA 22313-1450

By hand: U.S. Patent and Trademark Office
Customer Service Window, Mail Stop Petition
Randolph Building
401 Dulany Street
Alexandria, VA 22314

By FAX: (571) 273-8300 - ATTN: Office of Petitions

Telephone inquiries should be directed to the undersigned at (571) 272-3230.

Shirene Willis Brantley

Shirene Willis Brantley
Senior Petitions Attorney
Office of Petitions

UNITED STATES PATENT AND TRADEMARK OFFICE

Commissioner for Patents
United States Patent and Trademark Office
P.O. Box 1450
Alexandria, VA 22313-1450
www.uspto.gov

COPY MAILED

NOV 19 2008

OFFICE OF PETITIONS

STERNE, KESSLER, GOLDSTEIN & FOX P.L.L.C.
1100 NEW YORK AVENUE, N.W.
WASHINGTON DC 20005

In re Application of
Garcia, et al. :
Application No.: 12/057,015 :
Filed: March 27, 2008 :
Attorney Docket No.: 2222.539000S :
For: METHODS AND SYSTEMS FOR PROVIDING ACCESS CONTROL TO SECURED DATA

ON PETITION

This is a decision on the renewed petition under 37 CFR 1.47(a), filed October 24, 2008.

The petition is **GRANTED**.

Petitioners have shown that the non-signing inventors, Denis Jacques Paul Garcia, Michael Michio Ouye, Alain Rossmann, Steven Toye Crocker, and Weiqing Huang, have constructively or explicitly refused to join in the filing of the above-identified application.

The application and papers have been reviewed and found in compliance with 37 CFR 1.47(a). This application is hereby accorded Rule 1.47(a) status.

As provided in 37 CFR 1.47(c), this Office will forward notice of this application's filing to the non-signing inventors at the addresses given in the petition. Notice of the filing of this application will also be published in the Official Gazette.

This application is being referred to the Office of Patent Application Processing for further pre-examination processing.

Telephone inquiries should be directed to the undersigned at (571) 272-3230.

Shirene Willis Brantley
Senior Petitions Attorney
Office of Petitions

UNITED STATES PATENT AND TRADEMARK OFFICE

Commissioner for Patents
United States Patent and Trademark Office
P.O. Box 1450
Alexandria, VA 22313-1450
www.uspto.gov

DENIS JACQUES PAUL GARCIA
736 OAK CREEK DRIVE, #204
PALO ALTO CA 94304-2153

COPY MAILED

NOV 19 2008

OFFICE OF PETITIONS

In re Application of
Garcia, et al. : LETTER
Application No.: 12/057,015 :
Filed: March 27, 2008 :
Attorney Docket No.: 2222.539000S :
For: METHODS AND SYSTEMS FOR PROVIDING ACCESS CONTROL TO SECURED DATA

Dear Mr. Garcia:

You are named as a joint inventor in the above-identified United States patent application, filed under the provisions of 35 U.S.C. 116 (United States Code), and 37 CFR 1.47(a), Rules of Practice in Patent Cases. Should a patent be granted on the application you will be designated therein as a joint inventor.

As a named inventor you are entitled to inspect any paper in the file wrapper of the application, order copies of all or any part thereof (at a prepaid cost per 37 CFR 1.19) or make your position of record in the application. Alternatively, you may arrange to do any of the preceding through a registered patent attorney or agent presenting written authorization from you. If you care to join the application, counsel of record (see below) would presumably assist you. Joining the application would entail the filing of an appropriate oath or declaration by you pursuant to 37 CFR 1.63.

Telephone inquiries regarding this communication should be directed to the undersigned at (571) 272-3230. Requests for information regarding your application should be directed to the File Information Unit at (703) 308-2733. Information regarding how to pay for and order a copy of the application, or a specific paper in the application, should be directed to the Certification Division at (571) 272-3150 or 1 (800) 972-6382 (outside the Washington, DC area).

Shirene Willis Brantley

Shirene Willis Brantley
Senior Petitions Attorney
Office of Petitions

ATTORNEYS OF RECORD: STERNE, KESSLER, GOLDSTEIN & FOX P.L.L.C.
1100 NEW YORK AVENUE, N.W.
WASHINGTON DC 20005

UNITED STATES PATENT AND TRADEMARK OFFICE

Commissioner for Patents
United States Patent and Trademark Office
P.O. Box 1450
Alexandria, VA 22313-1450
www.uspto.gov

MICHAEL MICHIO OUYE
400 ORTEGA AVNUE, #123
MOUNTAIN VIEW CA 94040-1509

COPY MAILED

NOV 19 2008

OFFICE OF PETITIONS

In re Application of
Garcia, et al. : LETTER
Application No.: 12/057,015 :
Filed: March 27, 2008 :
Attorney Docket No.: 2222.539000S :
For: METHODS AND SYSTEMS FOR PROVIDING ACCESS CONTROL TO SECURED DATA

Dear Mr. Ouye:

You are named as a joint inventor in the above-identified United States patent application, filed under the provisions of 35 U.S.C. 116 (United States Code), and 37 CFR 1.47(a), Rules of Practice in Patent Cases. Should a patent be granted on the application you will be designated therein as a joint inventor.

As a named inventor you are entitled to inspect any paper in the file wrapper of the application, order copies of all or any part thereof (at a prepaid cost per 37 CFR 1.19) or make your position of record in the application. Alternatively, you may arrange to do any of the preceding through a registered patent attorney or agent presenting written authorization from you. If you care to join the application, counsel of record (see below) would presumably assist you. Joining the application would entail the filing of an appropriate oath or declaration by you pursuant to 37 CFR 1.63.

Telephone inquiries regarding this communication should be directed to the undersigned at (571) 272-3230. Requests for information regarding your application should be directed to the File Information Unit at (703) 308-2733. Information regarding how to pay for and order a copy of the application, or a specific paper in the application, should be directed to the Certification Division at (571) 272-3150 or 1 (800) 972-6382 (outside the Washington, DC area).

Shirene Willis Brantley

Shirene Willis Brantley
Senior Petitions Attorney
Office of Petitions

ATTORNEYS OF RECORD: STERNE, KESSLER, GOLDSTEIN & FOX P.L.L.C.
1100 NEW YORK AVENUE, N.W.
WASHINGTON DC 20005

UNITED STATES PATENT AND TRADEMARK OFFICE

Commissioner for Patents
United States Patent and Trademark Office
P.O. Box 1450
Alexandria, VA 22313-1450
www.uspto.gov

COPY MAILED

NOV 19 2008

OFFICE OF PETITIONS

ALAIN ROSSMANN
1247 COWPER STREET
PALO ALTO CA 94301-3220

In re Application of
Garcia, et al. : LETTER
Application No.: 12/057,015 :
Filed: March 27, 2008 :
Attorney Docket No.: 2222.539000S :
For: METHODS AND SYSTEMS FOR PROVIDING ACCESS CONTROL TO SECURED DATA

Dear Mr. Rossmann:

You are named as a joint inventor in the above-identified United States patent application, filed under the provisions of 35 U.S.C. 116 (United States Code), and 37 CFR 1.47(a), Rules of Practice in Patent Cases. Should a patent be granted on the application you will be designated therein as a joint inventor.

As a named inventor you are entitled to inspect any paper in the file wrapper of the application, order copies of all or any part thereof (at a prepaid cost per 37 CFR 1.19) or make your position of record in the application. Alternatively, you may arrange to do any of the preceding through a registered patent attorney or agent presenting written authorization from you. If you care to join the application, counsel of record (see below) would presumably assist you. Joining the application would entail the filing of an appropriate oath or declaration by you pursuant to 37 CFR 1.63.

Telephone inquiries regarding this communication should be directed to the undersigned at (571) 272-3230. Requests for information regarding your application should be directed to the File Information Unit at (703) 308-2733. Information regarding how to pay for and order a copy of the application, or a specific paper in the application, should be directed to the Certification Division at (571) 272-3150 or 1 (800) 972-6382 (outside the Washington, DC area).

Shirene Willis Brantley
Senior Petitions Attorney
Office of Petitions

ATTORNEYS OF RECORD: STERNE, KESSLER, GOLDSTEIN & FOX P.L.L.C.
1100 NEW YORK AVENUE, N.W.
WASHINGTON DC 20005

UNITED STATES PATENT AND TRADEMARK OFFICE

Commissioner for Patents
United States Patent and Trademark Office
P.O. Box 1450
Alexandria, VA 22313-1450
www.uspto.gov

COPY MAILED

NOV 19 2008

OFFICE OF PETITIONS

STEVEN TOYE CROCKER
1601 SHERMAN AVENUE
BURLINGAME CA 94010-4831

In re Application of
Garcia, et al. : LETTER
Application No.: 12/057,015 :
Filed: March 27, 2008 :
Attorney Docket No.: 2222.539000S :
For: METHODS AND SYSTEMS FOR PROVIDING ACCESS CONTROL TO SECURED DATA

Dear Mr. Crocker:

You are named as a joint inventor in the above-identified United States patent application, filed under the provisions of 35 U.S.C. 116 (United States Code), and 37 CFR 1.47(a), Rules of Practice in Patent Cases. Should a patent be granted on the application you will be designated therein as a joint inventor.

As a named inventor you are entitled to inspect any paper in the file wrapper of the application, order copies of all or any part thereof (at a prepaid cost per 37 CFR 1.19) or make your position of record in the application. Alternatively, you may arrange to do any of the preceding through a registered patent attorney or agent presenting written authorization from you. If you care to join the application, counsel of record (see below) would presumably assist you. Joining the application would entail the filing of an appropriate oath or declaration by you pursuant to 37 CFR 1.63.

Telephone inquiries regarding this communication should be directed to the undersigned at (571) 272-3230. Requests for information regarding your application should be directed to the File Information Unit at (703) 308-2733. Information regarding how to pay for and order a copy of the application, or a specific paper in the application, should be directed to the Certification Division at (571) 272-3150 or 1 (800) 972-6382 (outside the Washington, DC area).

Shirene Willis Brantley
Senior Petitions Attorney
Office of Petitions

ATTORNEYS OF RECORD: STERNE, KESSLER, GOLDSTEIN & FOX P.L.L.C.
1100 NEW YORK AVENUE, N.W.
WASHINGTON DC 20005

UNITED STATES PATENT AND TRADEMARK OFFICE

Commissioner for Patents
United States Patent and Trademark Office
P.O. Box 1450
Alexandria, VA 22313-1450
www.uspto.gov

COPY MAILED

NOV 19 2008

OFFICE OF PETITIONS

WEIQING HUANG
3705 APPALACHIAN WAY
FLOWER MOUND TX 75022-7821

In re Application of
Garcia, et al. : LETTER
Application No.: 12/057,015 :
Filed: March 27, 2008 :
Attorney Docket No.: 2222.539000S :
For: METHODS AND SYSTEMS FOR PROVIDING ACCESS CONTROL TO SECURED DATA

Dear Mr. Huang:

You are named as a joint inventor in the above-identified United States patent application, filed under the provisions of 35 U.S.C. 116 (United States Code), and 37 CFR 1.47(a), Rules of Practice in Patent Cases. Should a patent be granted on the application you will be designated therein as a joint inventor.

As a named inventor you are entitled to inspect any paper in the file wrapper of the application, order copies of all or any part thereof (at a prepaid cost per 37 CFR 1.19) or make your position of record in the application. Alternatively, you may arrange to do any of the preceding through a registered patent attorney or agent presenting written authorization from you. If you care to join the application, counsel of record (see below) would presumably assist you. Joining the application would entail the filing of an appropriate oath or declaration by you pursuant to 37 CFR 1.63.

Telephone inquiries regarding this communication should be directed to the undersigned at (571) 272-3230. Requests for information regarding your application should be directed to the File Information Unit at (703) 308-2733. Information regarding how to pay for and order a copy of the application, or a specific paper in the application, should be directed to the Certification Division at (571) 272-3150 or 1 (800) 972-6382 (outside the Washington, DC area).

Shirene Willis Brantley
Senior Petitions Attorney
Office of Petitions

ATTORNEYS OF RECORD: STERNE, KESSLER, GOLDSTEIN & FOX P.L.L.C.
1100 NEW YORK AVENUE, N.W.
WASHINGTON DC 20005

UNITED STATES PATENT AND TRADEMARK OFFICE

Commissioner for Patents
United States Patent and Trademark Office
P.O. Box 1450
Alexandria, VA 22313-1450
www.uspto.gov

BAKER BOTTS LLP
C/O INTELLECTUAL PROPERTY DEPARTMENT
THE WARNER, SUITE 1300
1299 PENNSYLVANIA AVE, NW
WASHINGTON, DC 20004-2400

MAILED

APR 27 2009

OFFICE OF PETITIONS

In re Application of	:	
Shimizu et al.	:	
Application No. 12/057,017	:	ON PETITION
Filed: March 27, 2008	:	
Attorney Docket No. 076376.1030	:	

This is a decision on the petition under the unintentional provisions of 37 CFR 1.137(b), filed January 6, 2009, to revive the above-identified application.

The petition is **GRANTED**.

The application became abandoned for failure to reply in a timely manner to the Notice to File Corrected Application Papers (Notice), mailed April 28, 2008. The Notice set a period for reply of two (2) months from the mail date of the Notice. No extensions of time under the provisions of 37 CFR 1.136(a) were obtained. Accordingly, the application became abandoned on June 29, 2008.

The petition satisfies the requirements of 37 CFR 1.137(b) in that petitioner has supplied (1) the reply in the form of replacement drawings, (2) the petition fee of $1,620, and (3) an adequate statement of unintentional delay.

The application is being referred to the Office of Patent Application Processing (OPAP) for further processing.

Telephone inquires related to this decision should be directed to Alicia Kelley at (571) 272-6059. Telephone inquiries related to processing at OPAP should be directed to their hotline at (571) 272-4000.

/SDB/

Sherry D. Brinkley
Petitions Examiner
Office of Petitions

UNITED STATES PATENT AND TRADEMARK OFFICE

Commissioner for Patents
United States Patent and Trademark Office
P.O. Box 1450
Alexandria, VA 22313-1450
www.uspto.gov

FERNANDEZ & ASSOCIATES LLP
1047 EL CAMINO REAL, SUITE 201
MENLO PARK, CA 94025

COPY MAILED

MAR 0 9 2009

OFFICE OF PETITIONS

In re Application of	:	
Dongyun LEE et al	:	
Application No. 12/057,051	:	DECISION ON PETITION
Filed March 27, 2008	:	TO WITHDRAW
Attorney Docket No. SYNER-P001	:	FROM RECORD
	:	

This is a decision on the Request to Withdraw as attorney or agent of record under 37 C.F.R. § 1.36(b), filed February 11, 2009.

The request is **APPROVED**.

A grantable request to withdraw as attorney/agent of record must be signed by every attorney/agent seeking to withdraw or contain a clear indication that one attorney is signing on behalf of another/others. The Office requires the practitioner(s) requesting withdrawal to certify that he, she, or they have: (1) given reasonable notice to the client, prior to the expiration of the response period, that the practitioner(s) intends to withdraw from employment; (2) delivered to the client or a duly authorized representative of the client all papers and property (including funds) to which the client is entitled; and (3) notified the client of any responses that may be due and the time frame within which the client must respond, pursuant 37 CFR 10.40(c).

The request was signed by Dennis S. Fernandez on behalf of the attorneys of record associated with Customer No. 22877.

The attorneys of record associated with Customer No. 22877 have been withdrawn.

Applicant is reminded that there is no attorney of record at this time.

The correspondence address of record has been changed and the new correspondence address is the address indicated below until otherwise properly notified by the applicant.

Telephone inquiries concerning this decision should be directed to the undersigned at 571-272-6735.

Diane Goodwyn
Petitions Examiner
Office of Petitions

cc: DONGYUN LEE
5039 LASSEN AVENUE
SAN JOSE, CA 95129

UNITED STATES PATENT AND TRADEMARK OFFICE

Commissioner for Patents
United States Patent and Trademark Office
P.O. Box 1450
Alexandria, VA 22313-1450
www.uspto.gov

BUSKOP LAW GROUP, P.C.
4511 DACOMA STREET
HOUSTON, TX 77092

COPY MAILED

MAY 13 2008

OFFICE OF PETITIONS

In re Application of	:	
Peter A. Rosa, et al.	:	
Application No. 12/057,061	:	DECISION ON PETITION
Filed: March 27, 2008	:	TO MAKE SPECIAL UNDER
Attorney Docket No. 1628.009	:	37 CFR 1.102(c)(1)
	:	

This is a decision on the petition under 37 CFR 1.102(c)(1), filed April 8, 2008, to make the above-identified application special based on applicant's health as set forth in M.P.E.P. § 708.02, Section III.

The petition is **GRANTED**.

A grantable petition to make an application special under 37 CFR 1.102(c)(1) and MPEP § 708.02, Section III: Applicant's Health, must be accompanied by evidence showing such as a doctor's certificate or other medical certificate that the state of health of the applicant is such that he or she might not be available to assist in the prosecution of the application if it were to run its normal course. No fee is required

The instant petition includes an official medical certificate. Accordingly, the above-identified application has been accorded "special" status.

Telephone inquiries concerning this decision should be directed to undersigned at 571-272-1642.

All other inquiries concerning either the examination or status of the application should be directed to the Technology Center.

The application is being referred back to the Office of Patent Application Processing for further processing. This application will be accorded "special" status once pre-examination processing is complete.

April M. Wise
Petitions Examiner
Office of Petitions

UNITED STATES PATENT AND TRADEMARK OFFICE

Commissioner for Patents
United States Patent and Trademark Office
P.O. Box 1450
Alexandria, VA 22313-1450
www.uspto.gov

FULBRIGHT & JAWORSKI, LLP
1301 MCKINNEY
SUITE 5100
HOUSTON, TX 77010-3095

COPY MAILED

OCT 29 2009

OFFICE OF PETITIONS

In re Application of	:	
Ali Azhdarinia, et al.	:	
Application No. 12/057,066	:	DECISION ON PETITION
Filed: March 27, 2008	:	TO WITHDRAW
Attorney Docket No. HO-P03420US1	:	FROM RECORD
	:	

This is a decision on the Request to Withdraw as attorney or agent of record under 37 C.F.R. § 1.36(b), filed June 8, 2009.

The request is **DISMISSED** as moot.

A review of the file record indicates that the power of attorney to Fulbright & Jaworski, LLP has been revoked by the assignee of the patent application on May 7, 2009. Accordingly, the request to withdraw under 37 C.F.R. § 1.36(b) is moot.

All future communications from the Office will continue to be directed to the below-listed address until otherwise notified by applicant.

Telephone inquires concerning this decision should be directed to undersigned at 571-272-1642. All other inquiries concerning the examination or status of this application should be directed to the Technology Center.

/AMW/
April M. Wise
Petitions Examiner
Office of Petitions

cc: OSHA LIANG, LLP
TWO HOUSTON CENTER
909 FANNIN, SUITE 3500
HOUSTON, TX 77010

UNITED STATES PATENT AND TRADEMARK OFFICE

UNITED STATES DEPARTMENT OF COMMERCE
United States Patent and Trademark Office
Address: COMMISSIONER FOR PATENTS
P.O. Box 1450
Alexandria, Virginia 22313-1450
www.uspto.gov

APPLICATION NUMBER	FILING OR 371(C) DATE	FIRST NAMED APPLICANT	ATTY. DOCKET NO./TITLE
12/057,066	03/27/2008	Ali Azhdarinia	HO-P03420US1

CONFIRMATION NO. 1653

POWER OF ATTORNEY NOTICE

26271
FULBRIGHT & JAWORSKI, LLP
1301 MCKINNEY
SUITE 5100
HOUSTON, TX 77010-3095

OC000000038495387

Date Mailed: 10/28/2009

NOTICE REGARDING CHANGE OF POWER OF ATTORNEY

This is in response to the Power of Attorney filed 05/07/2009.

- The Power of Attorney to you in this application has been revoked by the assignee who has intervened as provided by 37 CFR 3.71. Future correspondence will be mailed to the new address of record(37 CFR 1.33).

/amwise/

Office of Data Management, Application Assistance Unit (571) 272-4000, or (571) 272-4200, or 1-888-786-0101

UNITED STATES PATENT AND TRADEMARK OFFICE

Commissioner for Patents
United States Patent and Trademark Office
P.O. Box 1450
Alexandria, VA 22313-1450
www.uspto.gov

ANDREWS & KURTH, L.L.P.
600 TRAVIS, SUITE 4200
HOUSTON TX 77002

COPY MAILED

APR 2 2 2008

OFFICE OF PETITIONS

In re Application of	:	
DUNN, James L.	:	
Application No. 12/057,084	:	DECISION ON PETITION
Filed: March 27, 2008	:	TO MAKE SPECIAL UNDER
Attorney Docket No. **JLD002NP/181239**	:	37 CFR 1.102(c)(1)
	:	

This is a decision on the petition under 37 CFR 1.102(c)(1), filed March 27, 2008, to make the above-identified application special based on applicant's age as set forth in M.P.E.P. § 708.02, Section IV.

The petition is **GRANTED.**

A grantable petition to make an application special under 37 CFR 1.102(c)(1) and MPEP § 708.02, Section IV: Applicant's Age must be accompanied by evidence showing that at least one of the applicants is 65 years of age, or more, such as a birth certificate or a statement by applicant. No fee is required

The instant petition includes the declaration of inventor James L. Dunn, attesting to his age. Accordingly, the above-identified application will be accorded "special" status.

Inquiries concerning either the examination or status of the application should be directed to the Office of Patent Application Processing at 571-272-4000.

Telephone inquiries concerning this decision should be directed to the undersigned at 571-272-7253.

The application is being forwarded to the office of Initial Patent Examination for processing. This application will be accorded "special" status when pre-examination processing is done.

Monica A. Graves
Petitions Examiner
Office of Petitions

UNITED STATES PATENT AND TRADEMARK OFFICE

Commissioner for Patents
United States Patent and Trademark Office
P.O. Box 1450
Alexandria, VA 22313-1450
www.uspto.gov

ROBERT A. KENT
P.O. BOX 1431
DUNCAN, OK 73536

MAILED

MAR 25 2009

OFFICE OF PETITIONS

In re Application of :
Jim B. Surjaatmadja :
Application No. 12/057, 099 : DECISION ON PETITION
Filed: March 27, 2008 :
Attorney Docket No. HES 2008-IP-008668U1 :

This is a decision on the petition under the unintentional provisions of 37 CFR 1.137(b), filed February 18, 2009, to revive the above-identified application.

There is no indication that the petition is signed by a registered patent attorney or patent agent of record. However, in accordance with 37 CFR 1.34, the signature of Mr. Bradley Bowling appearing on the correspondence shall constitute a representation to the United States Patent and Trademark Office that he is authorized to represent the particular party in whose behalf he acts. If, Mr. Bowling desires to receive correspondence regarding this file, the appropriate power of attorney documents must be submitted. A courtesy copy of this decision is being mailed to Mr. Bowling, the petitioner herein. However, until otherwise instructed, all future correspondence regarding this application file will be directed solely to the above-noted correspondence address of record.

The petition is **GRANTED**.

The application became abandoned for failure to reply in a timely manner to the Notice to File Missing Parts of Nonprovisional Application (Notice), mailed April 17, 2008. The Notice set a period for reply of two (2) months from the mail date of the Notice. No extensions of time under the provisions of 37 CFR 1.136(a) were obtained. Accordingly, the application became abandoned on June 18, 2008.

It is not apparent whether the statement of unintentional delay was signed by a person who would have been in a position of knowing that the entire delay in filing the required reply from the due date for the reply until the filing of a grantable petition pursuant to 37 CFR 1.137(b) was unintentional. Nevertheless, in accordance with 37 CFR 10.18, the statement is accepted as constituting a certification of unintentional delay. However, in the event that petitioner has no knowledge that the delay was unintentional, petitioner must make such an inquiry to ascertain that, in fact, the delay was unintentional. If petitioner discovers that the delay was intentional, petitioner must notify the Office.

The petition satisfies the requirements of 37 CFR 1.137(b) in that petitioner has supplied (1) the reply in the form of a declaration in compliance with 37 CFR 1.63 and surcharge of $130 , (2) the petition fee of $1,620, and (3) an adequate statement of unintentional delay.

This application file is being referred to the Office of Patent Application Processing (OPAP) for further pre-examination processing using the declaration filed February 18, 2009.

Telephone inquiries concerning this decision should be directed to Alicia Kelley at (571) 272-6059. Telephone inquiries related to OPAP processing should be directed to their hotline at (271) 272-4000.

/SDB/

Sherry D. Brinkley
Petitions Examiner
Office of Petitions

cc: BRADLEY BOWLING
BAKER BOTTS, L.L.P.
910 LOUISIANA STREET
ONE SHELL PLAZA
HOUSTON, TX 77002

UNITED STATES PATENT AND TRADEMARK OFFICE

UNITED STATES DEPARTMENT OF COMMERCE
United States Patent and Trademark Office
Address: COMMISSIONER FOR PATENTS
P.O. Box 1450
Alexandria, Virginia 22313-1450
www.uspto.gov

APPLICATION NUMBER	FILING OR 371(C) DATE	FIRST NAMED APPLICANT	ATTY. DOCKET NO./TITLE
12/057,099	03/27/2008	Jim B. Surjaatmadja	HES 2008-IP-008668U1

CONFIRMATION NO. 1724

POA ACCEPTANCE LETTER

71407
ROBERT A. KENT
P.O. BOX 1431
DUNCAN, OK 73536

OC000000035131900

Date Mailed: 03/24/2009

NOTICE OF ACCEPTANCE OF POWER OF ATTORNEY

This is in response to the Power of Attorney filed 03/09/2009.

The Power of Attorney in this application is accepted. Correspondence in this application will be mailed to the above address as provided by 37 CFR 1.33.

/atkelley/

Office of Data Management, Application Assistance Unit (571) 272-4000, or (571) 272-4200, or 1-888-786-0101

UNITED STATES PATENT AND TRADEMARK OFFICE

Commissioner for Patents
United States Patent and Trademark Office
P.O. Box 1450
Alexandria, VA 22313-1450
www.uspto.gov

ROSENBAUM & ASSOCIATES PC
650 DUNDEE ROAD
SUITE #380
NORTHBROOK IL 60062

COPY MAILED

JUL 14 2009

OFFICE OF PETITIONS

In re Application of	:	
Priya, et al.	:	
Application No. 12/057,107	:	ON PETITION
Filed: March 27, 2008	:	
Attorney Docket No. 6129-022	:	

This is a decision on the petition to revive under 37 CFR 1.137(b), filed June 9, 2009.

The petition is **GRANTED**.

This application was held abandoned for failure to timely file a response to the non-final Office action mailed October 17, 2008. This Office action set an extendable period for reply of three (3) months. No reply having been received, the application became abandoned on January 18, 2009. A Notice of Abandonment was mailed on May 21, 2009.

With the instant petition, petitioner paid the petition fee, made the proper statement of unintentional delay, and submitted the required reply in the form of an Amendment.

The application is being forwarded to Group Art Unit 2834 for consideration of the Amendment, filed June 9, 2009.

Telephone inquiries regarding this decision should be directed to the undersigned at (571)272-3207.

Cliff Congo
Petitions Attorney
Office of Petitions

UNITED STATES PATENT AND TRADEMARK OFFICE

UNITED STATES DEPARTMENT OF COMMERCE
United States Patent and Trademark Office
Address: COMMISSIONER FOR PATENTS
P.O. Box 1450
Alexandria, Virginia 22313-1450
www.uspto.gov

APPLICATION NO.	FILING DATE	FIRST NAMED INVENTOR	ATTORNEY DOCKET NO.	CONFIRMATION NO.
12/057,117	03/27/2008	Bunji Mizuno	061282-0320	1759

53080 7590 05/02/2008
MCDERMOTT WILL & EMERY LLP
600 13TH STREET, NW
WASHINGTON, DC 20005-3096

EXAMINER

ART UNIT	PAPER NUMBER
2881	

MAIL DATE	DELIVERY MODE
05/02/2008	PAPER

Please find below and/or attached an Office communication concerning this application or proceeding.

The time period for reply, if any, is set in the attached communication.

UNITED STATES PATENT AND TRADEMARK OFFICE

Commissioner for Patents
United States Patent and Trademark Office
P.O. Box 1450
Alexandria, VA 22313-1450
www.uspto.gov

MCDERMOTT WILL & EMERY LLP
600 13TH STREET, NW
WASHINGTON DC 20005-3096

In re Application of: Bunji MIZUNO et al Serial No.: 12/057,117 Filed: March 27, 2008 Title: IMPURITY INTRODUCING APPARATUS AND IMPURITY INTRODUCING METHOD	DECISION ON PETITION TO MAKE SPECIAL FOR NEW APPLICATION UNDER 37 C.F.R. § 1.102 & M.P.E.P. § 708.02

This is a decision on the petition filed on March 27, 2008 to make the above-identified application special for accelerated examination procedure under 37 C.F.R. § 1.102(d).

The petition to make the application special is **DENIED**.

REGULATION AND PRACTICE

To be eligible for accelerated examination under 37 C.F.R. § 1.102(d) and pursuant to the "Change to Practice for Petitions in Patent Applications to Make Special and for Accelerated Examination" published in the Federal Register on June 26, 2006 (71 Fed. Reg. 36323), the following conditions must be satisfied:

1. The application must be a non-reissue utility or design application filed under 37 CFR 1.111(a);
2. The application, the petition and the required fees must be filed electronically using the USPTO's electronic filing system (EFS), or EFS-web; if not filed electronically, a statement asserting that EFS and EFS-web were not available during the normal business hours;
3. The application, at the time of filing, must be complete under 37 CFR 1.51 and in condition for examination;
4. The application must contain three or fewer independent claims and twenty or fewer total claims and the claims must be directed to a single invention.

The application as filed is not eligible for the accelerated examination under 37 C.F.R. § 1.102(d) because the application was not complete under 37 CFR § 1.51 and in condition for examination at the time of filing. The mailing of a Notice to File Missing Parts or a Notice to

File Corrected Application Papers is evidence that the application was not complete and in condition for examination at the time of filing. In this case, the additional claim fees as a non-small entity was not submitted as indicated in the Notice to File Missing Parts of Nonprovisional Application mailed on April 2, 2008.

For the above-stated reasons, the petition is **DENIED**. The application will therefore be taken up by the examiner for action in its regular turn.

Any inquiry regarding this decision should be directed to Quality Assurance Specialist Jose' G. Dees at (571) 272-1569.

Jose' G. Dees, Quality Assurance Specialist
Technology Center 2800
Semiconductors, Electrical and Optical
Systems and Components

UNITED STATES PATENT AND TRADEMARK OFFICE

Commissioner for Patents
United States Patent and Trademark Office
P.O. Box 1450
Alexandria, VA 22313-1450
www.uspto.gov

MCDERMOTT WILL & EMERY LLP
600 13TH STREET, NW
WASHINGTON DC 20005-3096

In re Application of: Bunji MIZUNO et al Serial No.: 12/057,117 Filed: March 27, 2008 Title: IMPURITY INTRODUCING APPARATUS AND IMPURITY INTRODUCING METHOD	DECISION ON PETITION TO MAKE SPECIAL FOR NEW APPLICATION UNDER 37 C.F.R. § 1.102 & M.P.E.P. § 708.02

This is a decision on the petition filed on March 27, 2008 to make the above-identified application special for accelerated examination procedure under 37 C.F.R. § 1.102(d).

The petition to make the application special is **DENIED**.

REGULATION AND PRACTICE

To be eligible for accelerated examination under 37 C.F.R. § 1.102(d) and pursuant to the "Change to Practice for Petitions in Patent Applications to Make Special and for Accelerated Examination" published in the Federal Register on June 26, 2006 (71 Fed. Reg. 36323), the following conditions must be satisfied:

1. The application must be a non-reissue utility or design application filed under 37 CFR 1.111(a);
2. The application, the petition and the required fees must be filed electronically using the USPTO's electronic filing system (EFS), or EFS-web; if not filed electronically, a statement asserting that EFS and EFS-web were not available during the normal business hours;
3. The application, at the time of filing, must be complete under 37 CFR 1.51 and in condition for examination;
4. The application must contain three or fewer independent claims and twenty or fewer total claims and the claims must be directed to a single invention.

The application as filed is not eligible for the accelerated examination under 37 C.F.R. § 1.102(d) because the application was not complete under 37 CFR § 1.51 and in condition for examination at the time of filing. The mailing of a Notice to File Missing Parts or a Notice to

File Corrected Application Papers is evidence that the application was not complete and in condition for examination at the time of filing. In this case, the additional claim fees as a non-small entity was not submitted as indicated in the Notice to File Missing Parts of Nonprovisional Application mailed on April 2, 2008.

For the above-stated reasons, the petition is **DENIED**. The application will therefore be taken up by the examiner for action in its regular turn.

Any inquiry regarding this decision should be directed to Quality Assurance Specialist Jose' G. Dees at (571) 272-1569.

Jose' G. Dees, Quality Assurance Specialist
Technology Center 2800
Semiconductors, Electrical and Optical
Systems and Components

UNITED STATES PATENT AND TRADEMARK OFFICE

Commissioner for Patents
United States Patent and Trademark Office
P.O. Box 1450
Alexandria, VA 22313-1450
www.uspto.gov

MAILED

MAY 27 2009

OFFICE OF PETITIONS

HAMILTON & TERRILE, LLP
IBM TUCSON, P.O. BOX 203518
AUSTIN, TX 78720

In re Application of	:	
Keith A. BELLO, et al	:	
Application No. 12/057,128	:	DECISION ON PETITION
Filed: March 27, 2008	:	
Attorney Docket No. TUC920070188US1	:	

This is a decision on the petition under the unintentional provisions of 37 CFR 1.137(b), filed March 2, 2009, to revive the above-identified application.

The petition is **GRANTED**.

The application became abandoned for failure to reply in a timely manner to the Notice to File Missing Parts of Nonprovisional Application (Notice), mailed April 17, 2008. The Notice set a period for reply of two (2) months from the mail date of the Notice. No extensions of time under the provisions of 37 CFR 1.136(a) were obtained. Accordingly, the application became abandoned on June 18, 2008.

The petition satisfies the requirements of 37 CFR 1.137(b) in that petitioner has supplied (1) the reply in the form replacement drawings; (2) the petition fee of $1620; and (3) a proper statement of unintentional delay.

Telephone inquiries concerning this decision should be directed to Diane Goodwyn at (571) 272-6735.

This application is being referred to the Office of Patent Application Processing for further processing in the normal course of business.

Thurman Page
Petitions Examiner
Office of Petitions

UNITED STATES PATENT AND TRADEMARK OFFICE

Commissioner for Patents
United States Patent and Trademark Office
P.O. Box 1450
Alexandria, VA 22313-1450
www.uspto.gov

Venable, LLP
P.O. Box 34385
Washington, DC 20043-9998

COPY MAILED
DEC 15 2008

In re Application of	:	
Emanuel F. Petricoin, III et al.	:	
Application No. 12/057,163	:	DECISION ON PETITION
Filed: March 27, 2008	:	TO WITHDRAW
Attorney Docket No. 65939-254850	:	FROM RECORD
	:	

This is a decision on the Request to Withdraw as attorney or agent under 37 C.F.R. § 1.36(b) or 37 C.F.R. § 10.40 filed November 17, 2008.

The request is **APPROVED**.

A grantable request to withdraw as attorney/agent of record must be signed by every attorney/agent seeking to withdraw or contain a clear indication that one attorney is signing on behalf of another/others. The Office requires the practitioner(s) requesting withdrawal to certify that he, she, or they have: (1) given reasonable notice to the client, prior to the expiration of the response period, that the practitioner(s) intends to withdraw from employment; (2) delivered to the client or a duly authorized representative of the client all papers and property (including funds) to which the client is entitled; and (3) notified the client of any responses that may be due and the time frame within which the client must respond, pursuant 37 CFR 10.40(c).

The request was signed by Michael A. Golin on behalf of all attorneys/agents associated with customer number 26694. All attorneys/agents associated with customer number 26694 have been withdrawn.

Applicant is reminded that there is no attorney of record at this time.

The correspondence address has been changed to the first signing inventor, since no assignee has properly intervened in this application. If an assignee would like to intervene in this application and receive future correspondence then the proper power of attorney documents and a statement under 37 CFR 3.73(b) must be submitted. The new address is copied below.

Telephone inquiries concerning this decision should be directed to Kimberly Inabinet at 571-272-4618.

Kimberly Inabinet
Petitions Examiner
Office of Petitions

cc: Emanuel F. Petricoin, III
7625 Great Dover Street
Gainesville, VA 20155

cc: Theranostics Health, LLC
15010 Broschart Road
Suite 200
Rockville, MD 20850

UNITED STATES PATENT AND TRADEMARK OFFICE

UNITED STATES DEPARTMENT OF COMMERCE
United States Patent and Trademark Office
Address: COMMISSIONER FOR PATENTS
P.O. Box 1450
Alexandria, Virginia 22313-1450
www.uspto.gov

APPLICATION NUMBER	FILING OR 371(C) DATE	FIRST NAMED APPLICANT	ATTY. DOCKET NO./TITLE
12/057,163	03/27/2008	Emanuel F. Petricoin III	65939-254850

CONFIRMATION NO. 1837

POWER OF ATTORNEY NOTICE

26694
VENABLE LLP
P.O. BOX 34385
WASHINGTON, DC 20043-9998

OC000000033618547

Date Mailed: 12/15/2008

NOTICE REGARDING CHANGE OF POWER OF ATTORNEY

This is in response to the Power of Attorney filed 11/17/2008.

- The withdrawal as attorney in this application has been accepted. Future correspondence will be mailed to the new address of record. 37 CFR 1.33.

/kainabinet/

Office of Data Management, Application Assistance Unit (571) 272-4000, or (571) 272-4200, or 1-888-786-0101

UNITED STATES PATENT AND TRADEMARK OFFICE

UNITED STATES DEPARTMENT OF COMMERCE
United States Patent and Trademark Office
Address: COMMISSIONER FOR PATENTS
P.O. Box 1450
Alexandria, Virginia 22313-1450
www.uspto.gov

CONLEY ROSE, P.C.
David A. Rose
P.O. BOX 3267
HOUSTON, TX 77253-3267

Mail Date: 04/21/2010

Applicant	: Charles I. Moffett	: DECISION ON REQUEST FOR
Patent Number	: 7588086	: RECALCULATION of PATENT
Issue Date	: 09/15/2009	: TERM ADJUSTMENT IN VIEW
Appliction No	: 12/057,165	: OF WYETH
Filed	: 03/27/2008	:
		:

The Patentee's Request for Recalculation is **DISMISSED.**

This Request is deemed ineligible for consideration for one or more of the following reasons:

(A). The patent for which PTA recalculation is requested is either a design or reissue application or is a reexamination proceeding;

(B). The patent for which PTA recalculation is requested resulted from a utility or plant application filed under 35 USC 111(a) before May 29, 2000 and no CPA filed in the application on/after May 29, 2000;

(C). The patent for which PTA recalculation is requested resulted from an international application in which the international filing date was before May 29, 2000 and no CPA filed in the application on/after May 29, 2000;

(D). The patent for which PTA recalculation is requested issued on/after March 2, 2010;

(E). The Request for Recalculation was filed more than 180 days after the grant date of the patent and the request was not filed within two months of a dismissal of a request for reconsideration of the of the patent term under 37 CFR 1.705(d);

(F). The Request for Recalculation is not solely limited to USPTO pre-Wyeth interpretation of 35 U.S.C. 154(b)(2)(A);

or

(G). A civil action was filed pursuant to 35 U.S.C. 154(b)(4)(A)concerning the same patent at issue in this request.

Patentee may file a reply to this decision dismissing the Request for Recalculation. Patentee must file such reply within one month or thirty days, whichever is longer, of the mail date of the decision dismissing the Request for Recalculation. No fee is required if patentee is asserting in the reply that the dismissal for ineligibility is improper.

Patentee should use document code PET.OP if electronically filing a reply to this dismissal. If the USPTO finds that the request was improperly deemed ineligible, the USPTO will mail applicant a recalculation determination.

Patentee should be aware that in order to preserve the right to review in the United States District Court for the District of Columbia of the USPTO patent term adjustment determination, patentee must ensure that he or she also take the steps required under 35 U.S.C. 154(b)(4)(A). Nothing in the request for recalculation should be construed as providing an alternative time frame for commencing a civil action under 35 U.S.C. 154 (b)(4)(A).

Any questions concerning this decision should be directed to the Office of Patent Legal Administration at 571-272-7702.

UNITED STATES PATENT AND TRADEMARK OFFICE

UNITED STATES DEPARTMENT OF COMMERCE
United States Patent and Trademark Office
Address: COMMISSIONER FOR PATENTS
P.O. Box 1450
Alexandria, Virginia 22313-1450
www.uspto.gov

APPLICATION NO.	FILING DATE	FIRST NAMED INVENTOR	ATTORNEY DOCKET NO.	CONFIRMATION NO.
12/057,200	03/27/2008	Takeshi Hongo	008073P374	1924

EXAMINER

7590 11/20/2009
BLAKELY SOKOLOFF TAYLOR & ZAFMAN LLP
1279 OAKMEAD PARKWAY
SUNNYVALE, CA 94085-4040

ART UNIT	PAPER NUMBER
3744	

MAIL DATE	DELIVERY MODE
11/20/2009	PAPER

DECISION GRANTING PETITION UNDER 37 CFR 1.138(d)

The declaration of express abandonment is recognized

This is in response to the petition under 37 CFR 1.138(d), requesting for a refund of any previously paid search fee and excess claims fee in the above-identified application.

The petition is granted.

The express abandonment is recognized. Any previously paid search fee and excess claims fee are hereby refunded.

Telephone inquiries should be directed to the Office of Data Management at (571) 272-4200.

Patent Publication Branch
Office of Data Management

Adjustment date: 11/20/2009 NFARMER
03/28/2008 INTEFSW 00003697 022666 12057200
02 FC:1111 510.00 CR

FORM PET651G (Rev. 08/07)

UNITED STATES PATENT AND TRADEMARK OFFICE

Commissioner for Patents
United States Patent and Trademark Office
P.O. Box 1450
Alexandria, VA 22313-1450
www.uspto.gov

CASCADIA INTELLECTUAL PROPERTY
500 UNION STREET, SUITE 1005
SEATTLE, WA 98101

COPY MAILED

APR 27 2009

OFFICE OF PETITIONS

In re Application of :
George D. JELATIS, et al. :
Application No. 12/057,272 :
Filed: March 27, 2008 :
Attorney Docket No. **115.0116US1/006-292** :

DECISION ON PETITION TO WITHDRAW FROM RECORD

This is a decision on the Request to Withdraw as attorney or agent of record under 37 C.F.R. § 1.36(b), filed January 26, 2009.

The request is **DISMISSED** as moot.

A review of the file record indicates that the power of attorney to **CASCADIA INTELLECTUAL PROPERTY** has been revoked by the assignee of the patent application on February 16, 2009. Accordingly, the request to withdraw under 37 C.F.R. § 1.36(b) is moot.

All future communications from the Office will continue to be directed to the below-listed address until otherwise notified by applicant.

Telephone inquires concerning this decision should be directed to the undersigned at 571-272-7253.

/Monica A. Graves/
Petitions Examiner, Office of Petitions

cc: **PAUL DEVRIES SMITH & DEFFNER, LLC**
45 S. SEVENTH STREET, PLAZA VII – SUITE 3000
MINNEAPOLIS, MN 55402-1630

UNITED STATES PATENT AND TRADEMARK OFFICE

UNITED STATES DEPARTMENT OF COMMERCE
United States Patent and Trademark Office
Address: COMMISSIONER FOR PATENTS
P.O. Box 1450
Alexandria, Virginia 22313-1450
www.uspto.gov

APPLICATION NO.	FILING DATE	FIRST NAMED INVENTOR	ATTORNEY DOCKET NO.	CONFIRMATION NO.
12/057,290	03/27/2008	Thomas A. Gray	10051721-4	1104

7590 12/11/2009
AGILENT TECHNOLOGIES INC.
INTELLECTUAL PROPERTY ADMINISTRATION,LEGAL DEPT.
MS BLDG. E P.O. BOX 7599
LOVELAND, CO 80537

EXAMINER
URBAN, EDWARD F

ART UNIT	PAPER NUMBER
2618	

NOTIFICATION DATE	DELIVERY MODE
12/11/2009	ELECTRONIC

DECISION GRANTING PETITION UNDER 37 CFR 1.138(d)

The declaration of express abandonment is recognized

This is in response to the petition under 37 CFR 1.138(d), requesting for a refund of any previously paid search fee and excess claims fee in the above-identified application.

The petition is granted.

The express abandonment is recognized. Any previously paid search fee and excess claims fee are hereby refunded.

Telephone inquiries should be directed to the Office of Data Management at (571) 272-4200.

Patent Publication Branch
Office of Data Management

FORM PET651G (Rev. 08/07)

UNITED STATES PATENT AND TRADEMARK OFFICE

UNITED STATES DEPARTMENT OF COMMERCE
United States Patent and Trademark Office
Address: COMMISSIONER FOR PATENTS
P.O. Box 1450
Alexandria, Virginia 22313-1450
www.uspto.gov

APPLICATION NO.	FILING DATE	FIRST NAMED INVENTOR	ATTORNEY DOCKET NO.	CONFIRMATION NO.
12/057,345	03/27/2008	Daniel Boyd Sullivan	BUR920070228US1	1184

76055 7590 08/04/2008
PRTSI, INC
4661 CARISBROOKE LN
FAIRFAX, VA 22030

EXAMINER

ART UNIT	PAPER NUMBER
2851	

MAIL DATE	DELIVERY MODE
08/04/2008	PAPER

Please find below and/or attached an Office communication concerning this application or proceeding.

The time period for reply, if any, is set in the attached communication.

UNITED STATES PATENT AND TRADEMARK OFFICE

Commissioner for Patents
United States Patent and Trademark Office
P.O. Box 1450
Alexandria, VA 22313-1450
www.uspto.gov

PRTSI, INC
4661 CARISBROOKE LN
FAIRFAX, VA 22030

In re Application of: Daniel Sullivan et al. Serial No.: 12/057,345 Filed: March 27, 2008 Attorney Docket No.: BUR920070228US1 Title: MULTIPLE PATTERN GENERATOR INTEGRATION WITH SINGLE POST EXPOSE BAKE STATION	: : : : : :	DECISION ON PETITION TO MAKE SPECIAL FOR NEW APPLICATION UNDER 37 C.F.R. § 1.102 & M.P.E.P. § 708.2

This is a decision on the petition filed on March 27, 2008 to make the above-identified application special for accelerated examination procedure under 37 C.F.R. § 1.102(d) and M.P.E.P. §708.02(a).

The petition to make the application special is **DISMISSED**.

REGULATION AND PRACTICE

A grantable petition to make special under 37 C.F.R. § 1.102(d), M.P.E.P. §708.02(a) and pursuant to the "Change to Practice for Petitions in Patent Applications to Make Special and for Accelerated Examination" published in the Federal Register on June 26, 2006 (71 Fed. Reg. 36323), must satisfy the following conditions:

I. Conditions Regarding the Application:

1. the application must be a non-reissue utility or design application filed under 37 CFR 1.111(a);
2. the application, the petition and the required fees must be filed electronically using the USPTO's electronic filing system (EFS), or EFS-web; if not filed electronically, a statement asserting that EFS and EFS-web were not available during the normal business hours.
3. at the time of filing, the application must be complete under 37 CFR 1.51 and in condition for examination;
4. the application must contain three or fewer independent claims and twenty or fewer total claims and the claims must be directed to a single invention.

II. Conditions Regarding the Petition:

The petition must:

1. be filed with the application;

2. include a statement that applicant agrees not to separately argue the patentability of any independent claim during any appeal in the application;

3. include a statement that applicant agrees to make an election without traverse in a telephone interview;

4. include a statement that applicant agrees to conduct such an interview when requested by the examiner; and

5. include a statement, made based on a good faith belief, that a preexamination search in compliance with the following requirements, was conducted, including an identification of the field of search by United States class and subclass, where applicable, and for database searches, the search logic or chemical structure or sequence used as a query, the name of the file(s) searched and the database service, and the date of the search.

The pre-examination search must:

5.1 involve U.S. patents and patent application publications, foreign patent documents, and non-patent literature, unless the applicant can justify with reasonable certainty that no references more pertinent than those already identified are likely to be found in the eliminated sources and includes such a justification with this statement;

5.2. be directed to the claimed invention and encompass all of the features of the claims, giving the claims the broadest reasonable interpretation; and

5.3. encompass the disclosed features that may be claimed.

6. must provide in support of the petition an accelerated examination support document. An accelerated examination support document must include:

6.1. an information disclosure statement (IDS) in compliance with 37 CFR 1.98 citing each reference deemed most closely related to the subject matter of each of the claims;

6.2. an identification of all the limitations in the claims that are disclosed by the reference specifying where the limitation is disclosed in the cited reference;

6.3. a detailed explanation of how each of the claims are patentable over the references cited with particularity required by 37 CFR 1.111(b) and (c);

6.4. a concise statement of the utility of the invention as defined in each of the independent claims (unless the application is a design application);

6.5. a showing of where each limitation of the claims finds support under 35 USC 112, first paragraph, in the written description of the specification. If applicable, the showing must also identify: (1) each means- (or step) plus-function claim element that invokes consideration under 35 USC 112, sixth paragraph; and (2) the structure, material, or acts in the specification that corresponds to each means- (or step) plus-function claim element that invokes consideration under 35 USC 112, sixth paragraph; if the application claims the benefit of one or more applications under title 35, United States Code, the showing must also include where each limitation of the claims finds support under 35 USC 112, first paragraph, in each such application in which such supports exists; and

6.6. an identification of any cited references that may be disqualified under 35 USC 103(c).

REVIEW OF FACTS

The application is eligible for the accelerated examination program as set forth in section I above.

The petition meets conditions II.1 through II.4; conditions II.6.1 and II.6.4-II.6.6 above. However, the petition does not meet conditions II.5, II.6.2 and II.6.3 above.

Regarding the conditions set forth in II.5.1 above, the field of search should properly include class 396, subclass 611, to cover the subject matter being claimed. It is also recommended that the pre-examination search include class 355, subclasses 27 and 77; class 430, subclass 311; and class 118, subclasses 724 and 725.

Regarding the condition set forth in II.6.2 above, the support document is required to identify all the limitations in the claims that are disclosed by the reference specifying where the limitation is disclosed in the cited reference. The support document, however, fails to clearly identify the claim limitations that are disclosed by each the references. For example, the "Identification of Limitations Disclosed by References" indicates that Van Den Nieuwelaar, et al. (US 7195407 B2) teaches "predicting times at which the lithographic exposure apparatus will be available to accept a prepared substrate for exposure from the track apparatus, and adjusting a rate at which the track apparatus (sic)." Such merely provides an abstract of the patent to Van Den Nieuwelaar and does not clearly identify the claim limitations that are disclosed by the reference. The claimed method recites several steps, beginning with "estimating the patterning time of each work piece to be patterned by the two or more exposure stations, based on pattern data and patterning tool parameters." It is not clear whether that step, or any other step, is disclosed by the reference. It should be made clear whether the reference teaches "estimating the patterning time of each work piece to be patterned by the two or more exposure stations, based on pattern data and patterning tool parameters" and, if so, the support document should specify where that limitation is disclosed in the cited reference.

Regarding the condition set forth in II.6.3 above, the petition fails to provide a detailed explanation of how the claim is patentable over the cited references with the particularity required by 37 C.F.R. §1.111(b) and (c). The support document fails to clearly explain how the claim is patentable over the cited references. For example, the "Detailed Explanation of Patentability" indicates that Van Den Nieuwelaar et al. neither teaches nor suggests "the prediction of the time duration of the exposure in order to schedule start of the exposure or the delivery to the bake station after exposure." However, the claim is directed to "scheduling the holding and release times of each work piece at the exposure station on which it was patterned based on a calculated range of post exposure delay time for each work piece." It is not apparent that the claim is directed to scheduling the start of the exposure or the delivery to the bake station after exposure based on the prediction of the time duration of the exposure. It should be made clear how the claim is patentable over the cited references.

Accordingly, the petition fails to meet conditions II.5, II.6.2 and II.6.3 for the reasons cited above.

DECISION

For the above-stated reasons, the petition is **dismissed**. The application will therefore be taken up by the examiner for action in its regular turn.

Petitioner is given a single opportunity to perfect the petition. Any request for reconsideration of this decision must be submitted within 1 (one) month or 30 (thirty) days, whichever is longer, (no extension of time under 37 CFR 1.136(a) is available) from the date of this decision in order to be considered timely. Any request for reconsideration must address the deficiencies indicated above.

Petitioner is reminded that, upon granting of the special status of the application on request for reconsideration, the application will be processed expeditiously. However, due to the dismissal of the instant petition, examination may not be completed within twelve months of the filing date of the application.

Any inquiry regarding this decision should be directed to the undersigned at (571) 272-1606.

Hien H. Phan, Quality Assurance Specialist
Technology Center 2800 - Semiconductors,
Electrical & Optical Systems & Components

HP/JC

UNITED STATES PATENT AND TRADEMARK OFFICE

UNITED STATES DEPARTMENT OF COMMERCE
United States Patent and Trademark Office
Address: COMMISSIONER FOR PATENTS
P.O. Box 1450
Alexandria, Virginia 22313-1450
www.uspto.gov

APPLICATION NO.	FILING DATE	FIRST NAMED INVENTOR	ATTORNEY DOCKET NO.	CONFIRMATION NO.
12/057,345	03/27/2008	Daniel Boyd Sullivan	BUR920070228US1	1184

76055 7590 09/25/2008
PRTSI, INC
4661 CARISBROOKE LN
FAIRFAX, VA 22030

EXAMINER
LEE, DIANE I

ART UNIT	PAPER NUMBER
2851	

MAIL DATE	DELIVERY MODE
09/25/2008	PAPER

Please find below and/or attached an Office communication concerning this application or proceeding.

The time period for reply, if any, is set in the attached communication.

UNITED STATES PATENT AND TRADEMARK OFFICE

Commissioner for Patents
United States Patent and Trademark Office
P.O. Box 1450
Alexandria, VA 22313-1450
www.uspto.gov

PRTSI, INC
4661 CARISBROOKE LN
FAIRFAX, VA 22030

In re Application of: Daniel Sullivan et al. Serial No.: 12/057,345 Filed: March 27, 2008 Docket No.: BUR920070228US1 Title: MULTIPLE PATTERN GENERATOR INTEGRATION WITH SINGLE POST EXPOSE BAKE STATION	DECISION ON PETITION TO MAKE SPECIAL FOR NEW APPLICATION UNDER 37 C.F.R. § 1.102 & M.P.E.P. § 708.02

This is a decision on the renewed petition filed on September 4, 2008 and supplemented on September 23, 2008, to make the above-identified application special for accelerated examination procedure under 37 C.F.R. §1.102.

The petition to make the application special is **GRANTED**.

The application is eligible for accelerated examination and the petition complies with the conditions for granting the application special status pursuant to the "Change to Practice for Petitions in Patent Applications to Make Special and for Accelerated Examination" published June 26, 2006, in the Federal Register. (71 Fed. Reg. 36323).

The prosecution of the instant application will be conducted expeditiously according to the following guidelines.

1. The application will be docketed to an examiner and taken up for action within two weeks of the date of this decision.

2. Restriction Practice:
   If the examiner determines that the claims are not directed to a single invention, a telephone request to elect one single invention will be made pursuant to MPEP 812.01. As a prerequisite to the grant of this petition, the applicant has agreed to make an oral election, by telephone, without traverse. If the applicant refuses to make an election without traverse, or the examiner cannot reach the applicant after a reasonable effort, the examiner will treat the first claimed invention (invention defined by claim 1) as having being constructively elected without traverse for examination.

3. Office action:
   If it is determined that, after appropriate consultation, there is a potential rejection or any other issue to be addressed, the examiner will telephone the applicant and arrange an interview to discuss and resolve the issue. An Office action, other than a Notice of Allowance and Fee(s) Due (Notice of Allowance), will not be issued unless either: 1) an interview was conducted but did not result in agreed to action that places the application in condition for allowance, or, 2) a determination is made that an interview would be unlikely to result in the application being placed in condition for allowance, and 3) an internal conference has been held to review any rejection of any claim.

4. Time for Reply:
   An Office action other than a Notice of Allowance or a final Office action will set a shortened statutory period of one month or thirty days, whichever is longer, for reply with no extension of time available under 37 C.F.R. §1.136(a). Failure to timely file a reply within this non-extendible period for reply will result in the abandonment of the application.

5. Reply by Applicant:
   A timely reply to an Office action other than the Notice of Allowance must be submitted electronically via EFS or EFS-web and limited to addressing the rejections, objections and requirement made. Any amendment that attempts to: 1) add claims which would result in more than three pending independent claims or more than twenty pending total claims; 2) present claims not encompassed by the pre-examination search or an updated accelerated examination support document; or 3) present claims that are directed a non-elected invention or an invention other than that previously claimed and examined in the application, will be treated as not fully responsive and will not be entered.

   For any amendment to the claims (including any new claim) that is not encompassed by the accelerated examination support document, applicant must provide an updated accelerated examination support document that encompasses the amended or new claims at the time of filing of the amendment.

   To proceed expeditiously with the examination, it is recommended that a reply with amendments made to any claim or with any new claim being added be accompanied by an updated accelerated examination support document or a statement explaining how the amended or new claim is supported by the original accelerated examination support document.

6. Information Disclosure Statement (IDS):
   Any IDS filed during prosecution must be submitted electronically via EFS or EFS-web, accompanied by an updated accelerated examination support document, and be in compliance with 37 C.F.R. §1.97 and §1.98.

7. Post-Allowance Processing:
   To expedite processing of the allowed application into a patent, the applicant must: 1) pay the required fees within one month of the date of the Notice of Allowance, and 2) not file any post allowance papers not required by the Office. In no event may the issue fee be paid and accepted later than three months from the date of the Notice of Allowance.

8. After-Final and Appeal Procedures:
   To expedite prosecution, after receiving the final Office action, applicant must: 1) promptly file a notice of appeal, an appeal brief and appeal fees; and 2) not request a pre-appeal brief conference.

   Any amendment, affidavit or other evidence filed after final Office action must comply with applicable rules and the requirements outlined in numbered paragraphs 5 and 6 above.

   On appeal, the application will proceed according to normal appeal procedures. After appeal, the application will again be treated special.

9. Proceedings Outside the Normal Examination Process:
   If the application becomes involved in a proceeding that is outside the normal examination process (e.g., a secrecy order, national security review, interference proceeding, petitions under 37 C.F.R. §1.181, §1.182 or §1.183), the application will be treated special before and after such proceeding.

10. Final Disposition:
    The twelve-month goal of this accelerated examination procedure ends with a final disposition. The mailing of a final Office action, a Notice of Allowance, the filing of a Notice of Appeal, or the filing of a Request for Continued Examination (RCE) is the final disposition.

If, during prosecution, a paper is not filed electronically using EFS-web, a reply is filed but is not fully responsive, the application is involved in an appeal, or a proceeding outside normal examination process, the application will still be examined expeditiously, however, the final disposition may occur more than twelve months from the filing of the application.

Any inquiry regarding this decision should be directed to the undersigned at (571) 272-1594.

Clayton Laballe, Quality Assurance Specialist
Technology Center 2800 - Semiconductors,
Electrical & Optical Systems & Components

CL/JC

UNITED STATES PATENT AND TRADEMARK OFFICE

Commissioner for Patents
United States Patent and Trademark Office
P.O. Box 1450
Alexandria, VA 22313-1450
www.uspto.gov

ADELI & TOLLEN, LLP
11940 San Vicente Blvd, Suite 100
LOS ANGELES CA 90049

MAILED

MAY 11 2009

OFFICE OF PETITIONS

In re Application of :
Moulin, et al :
Application No.: 12/057,367 :
Filed: March 27, 2008 :
Attorney Docket No.: REGM.P0003 :
For: METHOD FOR DETECTING SURFACE :
DEFECTS ON A SUBSTRATE AND DEVICE :
USING SAID METHOD :

ON PETITION

This is a decision on the petition filed March 18, 2009, entitled, "PETITION UNDER 37 CFR 1.47(a)." The petition will be treated as a petition under CFR 1.183, requesting waiver of 37 CFR 1.63 and 1.67, which requires all of the joint inventors to execute a supplemental declaration.[1]

The petition under 37 CFR 1.183 to waive 37 CFR 1.63 and 1.67 is **DISMISSED**.

The petition under 37 CFR 1.47(a) is **DISMISSED AS MOOT**.

Any request for reconsideration of this decision must be submitted within TWO (2) MONTHS from the mail date of this decision. Extensions of time under 37 CFR 1.136(a) are permitted. Any response should be entitled "Request for Reconsideration of Petition Under 37 CFR 1.183 to waive 37 CFR 1.63 and 1.67" and may include an oath or declaration executed by the inventor. **Failure to respond will result in abandonment of the application.**

While this waiver petition is not a petition under 37 CFR 1.47, it is evaluated in much the same way a Rule 47 petition is. Therefore, a grantable petition requires:

(1) a petition including proof of the pertinent facts establishing that the joint inventor(s) refuses to join, or cannot be found or reached after diligent effort,

[1] Once an application has received a fully executed oath or declaration and been placed on the files for examination, the provisions of 37 CFR 1.47 no longer apply. Rather, the remedy for treating an inventor's refusal or unavailability to sign a supplemental oath or declaration is waiver of 37 CFR 1.67. See MPEP 603.

(2) a proper oath or Declaration executed by the available joint inventor(s),
(3) a petition fee, and
(4) the last known address of the omitted inventor(s).

This petition lacks item (1).

Petitioners allege that Patrice Belin has constructively refused to execute the supplemental declaration. The statement of facts of Jerome Collin references a number of successful mailings to Mr. Belen as evidence of Mr. Belin's knowing constructive refusal to cooperate. However, none of the mailings are included as exhibits to the petition. The Office would like copies (and translations, if in a language other than English) of the December 12, 2008 reminder letter to Mr. Belen, the December 17, 2008 acknowledgement of receipt of the December 12, 2008 correspondence, the January 23, 2009 letter to Mr. Belen, and the January 30, 2009 acknowledgement of receipt of the January 23, 2008 correspondence. Per MPEP 409.03(d), Proof of Unavailability or Refusal, "...When it is concluded by the 37 CFR 1.47 applicant that a nonsigning inventor's conduct constitutes a refusal, all facts upon which that conclusion is based should be stated in the statement of facts in support of the petition or directly in the petition. If there is
documentary evidence to support facts alleged in the petition or in any statement of facts, such evidence should be submitted.

Regarding fees, petitioners submitted $200.00. The current Rule 183 petition fee is $400.00. Accordingly, deposit account no. 50-3804 will be charged the $200.00 balance due.

Further correspondence with respect to this matter should be addressed as follows:

By mail:
Mail Stop PETITION
Commissioner for Patents
Post Office Box 1450
Alexandria, VA 22313-1450

By hand:
U.S. Patent and Trademark Office
Customer Service Window, Mail Stop Petition
Randolph Building
401 Dulany Street
Alexandria, VA 22314

By FAX:
(571) 273-8300 - ATTN: Office of Petitions

Telephone inquiries should be directed to the undersigned at (571) 272-3230.

Shirene Willis Brantley

Shirene Willis Brantley
Senior Petitions Attorney
Office of Petitions

UNITED STATES PATENT AND TRADEMARK OFFICE

Commissioner for Patents
United States Patent and Trademark Office
P.O. Box 1450
Alexandria, VA 22313-1450
www.uspto.gov

COPY MAILED

AUG 24 2009

OFFICE OF PETITIONS

ADELI & TOLLEN, LLP
11940 San Vicente Blvd, Suite 100
LOS ANGELES CA 90049

In re Application of
Moulin, et al
Application No.: 12/057,367
Filed: March 27, 2008
Attorney Docket No.: REGM.P0003
For: METHOD FOR DETECTING SURFACE DEFECTS ON A SUBSTRATE AND DEVICE USING SAID METHOD

ON PETITION

This is a decision on the renewed petition under CFR 1.183, requesting waiver of 37 CFR 1.63 and 1.67, which requires all of the joint inventors to execute a supplemental declaration. The petition was filed on July 7, 2009.

The petition under 37 CFR 1.183 to waive 37 CFR 1.63 and 1.67 is **GRANTED**.

Petitioners have established that Patrice Belin has constructively refused to execute the supplemental declaration. The statement of facts of Jerome Collin references a number of successful mailings to Mr. Belen as evidence of Mr. Belin's constructive refusal to cooperate. Petitioners have provided translations of the mailings. It is agreed that justice would be served by waiving the requirement for his signature on the supplemental declaration filed on March 18, 2009.

The aforementioned supplemental declaration has been accepted, on petition, and placed in the file.

This application is being forwarded to Technology Center G.A.U. 2877 for examination in due course.

Telephone inquiries should be directed to the undersigned at (571) 272-3230.

Shirene Willis Brantley
Shirene Willis Brantley
Senior Petitions Attorney
Office of Petitions

UNITED STATES PATENT AND TRADEMARK OFFICE

UNITED STATES DEPARTMENT OF COMMERCE
United States Patent and Trademark Office
Address: COMMISSIONER FOR PATENTS
P.O. Box 1450
Alexandria, Virginia 22313-1450
www.uspto.gov

APPLICATION NO.	FILING DATE	FIRST NAMED INVENTOR	ATTORNEY DOCKET NO.	CONFIRMATION NO.
12/057,367	03/27/2008	Cecile Moulin	REGM.P0003	1219

48947 7590 07/07/2010
ADELI & TOLLEN, LLP
11940 San Vicente Blvd., Suite 100
LOS ANGELES, CA 90049

EXAMINER
UNDERWOOD, JARREAS C

ART UNIT	PAPER NUMBER
2877	

MAIL DATE	DELIVERY MODE
07/07/2010	PAPER

Please find below and/or attached an Office communication concerning this application or proceeding.

The time period for reply, if any, is set in the attached communication.

UNITED STATES PATENT AND TRADEMARK OFFICE

Commissioner for Patents
United States Patent and Trademark Office
P.O. Box 1450
Alexandria, VA 22313-1450
www.uspto.gov

Paper No. 20100706

ADELI & TOLLEN, LLP
11940 San Vicente Blvd., Suite 100
LOS ANGELES CA 90049

In re Application of:	:
Moulin ET AL.	: PETITION FOR CORRECTION OF
Serial No.: 12/057,367	: INVENTORSHIP
Filed: March 27, 2008	: UNDER 37 CFR § 1.48(a)
Attorney Docket No.: REGM.P0003	:

This is a decision on the petition filed April 30, 2010 to correct inventorship under 37 CFR 1.48 (a).

The petition is GRANTED.

In view of the papers filed April 30, 2010 it has been found that this nonprovisional application, as filed, through error and without deceptive intent, improperly set forth the inventorship, and accordingly, this application has been corrected in compliance with 37 CFR 1.48 (a). The inventorship of this application has been changed by adding the name:

Christophe Maleville

The application will be forwarded to the Office of Initial Patent Examination (OIPE) for issuance of a corrected filing receipt, and correction of Office records to reflect the inventorship as corrected.

Gregory J. Toatley, Jr.
Supervisory Patent Examiner,
Art Unit 2877

UNITED STATES PATENT AND TRADEMARK OFFICE

UNITED STATES DEPARTMENT OF COMMERCE
United States Patent and Trademark Office
Address: COMMISSIONER FOR PATENTS
P.O. Box 1450
Alexandria, Virginia 22313-1450
www.uspto.gov

APPLICATION NO.	FILING DATE	FIRST NAMED INVENTOR	ATTORNEY DOCKET NO.	CONFIRMATION NO.
12/057,431	03/28/2008	Yayoi Fujiwara	JP920080016US1 (163-229)	1338

49267 7590 07/23/2008
KEUSEY, TUTUNJIAN & BITETTO, P.C.
20 CROSSWAYS PARK NORTH, SUITE 210
WOODBURY, NY 11797

EXAMINER
ZHEN, WEI Y

ART UNIT	PAPER NUMBER
2191	

MAIL DATE	DELIVERY MODE
07/23/2008	PAPER

Please find below and/or attached an Office communication concerning this application or proceeding.

The time period for reply, if any, is set in the attached communication.

July 18, 2008

John G. Tutunjian
20 Crossways Park, North Suite 210
Woodbury, NY 11797

In re Application of:
Yayoi Fujiwara et al.
Serial No.: 12/057,431
Filed: March 28, 2008
Docket: JP920080016US1 (163-229)
Title: METHOD FOR AUTOMATING AN INTERNATIONALIZATION TEST IN A MULTILINGUAL WEB APPLICATION

DECISION ON PETITION TO MAKE SPECIAL FOR NEW APPLICATION UNDER 37 C.F.R. § 1.102 & M.P.E.P. § 708.02

This is a decision on the petition filed on March 28, 2008 to make the above-identified application special for accelerated examination procedure under 37 C.F.R. § 1.102(d).

The petition to make the application special is **DISMISSED**.

REGULATION AND PRACTICE

A grantable petition to make special under 37 C.F.R. § 1.102(d) and pursuant to the "Change to Practice for Petitions in Patent Applications to Make Special and for Accelerated Examination" published in the Federal Register on June 26, 2006 (71 Fed. Reg. 36323), must satisfy the following conditions:

I. Conditions Regarding the Application:

1. the application must be a non-reissue utility or design application filed under 37 CFR 1.111(a);
2. the application, the petition and the required fees must be filed electronically using the USPTO's electronic filing system (EFS), or EFS-web; if not filed electronically, a statement asserting that EFS and EFS-web were not available during the normal business hours.
3. at the time of filing, the application must be complete under 37 CFR 1.51 and in condition for examination;
4. the application must contain three or fewer independent claims and twenty or fewer total claims and the claims must be directed to a single invention.

II. Conditions Regarding the Petition:

The petition must:

1. be filed with the application;

2. include a statement that applicant agrees not to separately argue the patentability of any independent claim during any appeal in the application;

3. include a statement that applicant agrees to make an election without traverse in a telephone interview.

4. include a statement that applicant agrees to conduct such an interview when requested by the examiner. .

5. include a statement, made based on a good faith belief, that a preexamination search in compliance with the following requirements, was conducted, including an identification of the filed of search by United States class and subclass, where applicable, and for database searches, the search logic or chemical structure or sequence used as a query, the name of the file(s) searched and the database service, and the date of the search.

The preexamination search must:

5.1 involve U.S. patents and patent application publications, foreign patent documents, and non-patent literature, unless the applicant can justify with reasonable certainty that no references more pertinent than those already identified are likely to be found in the eliminated sources and includes such a justification with this statement;

5.2. be directed to the claimed invention and encompass all of the features of the claims, giving the claims the broadest reasonable expectation;

5.3. encompass the disclosed features that may be claimed.

6. must provide in support of the petition an accelerated examination support document. An accelerated examination support document must include:

6.1. an information disclosure statement (IDS) in compliance with 37 CFR 1.98 citing each reference deemed most closely related to the subject matter of each of the claims;

6.2. an identification of all the limitations in the claims that are disclosed by the reference specifying where the limitation is disclosed in the cited reference;

6.3. a detailed explanation of how each of the claims are patentable over the references cited with particularity required by 37 CFR 1.111(b) and (c);

6.4. a concise statement of the utility of the invention as defined in each of the independent claims (unless the application is a design application);

6.5. a showing of where each limitation of the claims finds support under 35 USC 112, first paragraph, in the written description of the specification. If applicable, the showing must also identify: (1) each means- (or step) plus-function claim element that invokes consideration under 35 UDC 112, sixth paragraph; and (2) the structure, material, or acts in the specification that corresponds to each means- (or step) plus-function claim element that invokes consideration under 35 UDC 112, sixth paragraph; if the application claims the benefit of one or more applications under title 35, United States Code, the showing must also include where each limitation of the claims finds support under 35 USC 112, first paragraph, in each such application in which such supports exists;

6.6. an identification of any cited references that may be disqualified under 35 USC 103(c).

REVIEW OF FACTS

The conditions I1-I4, II1-II4, II5.1, II5.3, II6.1, II6.3-II6.4, and II6.6 above are met. However, the petition fails to comply with conditions II5.2, II6.2, and II6.5 above. Therefore, the petition fails to meet the required conditions to be accorded special status under the accelerated examination procedure.

Deleted: ¶

Regarding the requirement of MPEP § 708.02(a)(I.)(H)[1] and items II.5.2 above, the pre-examination search must be directed to the (instant) claimed invention and encompass all of the features of the claims as well as encompass the disclosed features that may be claimed and must be implemented on the broadest reasonable interpretation of claims. Text searches of section (A) of the Pre-examination Search Document should cover individual features of the claims themselves as well as a combination of features. The text search for US and foreign documents as well as for non-patent literature should include appropriate terms, Boolean operators, truncations, and proximities if applicable.

The text search provided in the Statement of Pre-examination Search fails to use little if any synonyms, thus claims were not given their broadest reasonable interpretation. For example, the search was conducted using only the term "web" instead of including widely known synonyms such as "internet" or "network". In addition, the only proximity operator used was "and". Use of other proximity operators such as "nearN" , 'with" or "same" is suggested. In addition, the scope of the search for non-US patent documents appears to differ from that used for US patent documents.

With respect to the claimed invention, specific key features do not appear to have been included in the search. For example, key features of "comparing http...data in the base language with data in test object language...verifying..based on the comparing" or of " setting a base language...analyzing ...data in the base language...and preparing [a]request..." do not have appeared to have been included in the search. Failure to include these features in the search is particularly important, as they are at relied upon to distinguish the claimed invention over the closest prior art. While use of the terms "verify" and "verification" are noted, it is not clear how this search corresponds to those features discussed above.

As noted in MPEP 719.05, a classification search is a complete search of all documents in a particular subclass. In the application at issue, the class/subclass search appears to have been limited by a text search.

Clarification and/or correction are required.

Examples of various search strategies can be found on USPTO website, using the link http://www.uspto.gov/web/patents/accelerated/ and clicking on "Sample Accelerated Examination Support Document".

Regarding the requirement of MPEP § 708.02(a)(I.)(I)(3) and item II.6.2 above, the accelerated examination support document must include an identification of all the limitations in the claims that are disclosed by the reference specifying where the limitation is disclosed in the cited reference. Section 9(B) of the Examination Support Document addresses the prior art deemed

[1] MPEP 8th ed. rev 6 September 2007

most closely related. However, the discussion of the references does not include an identification of the specific limitations of the claims disclosed by the references nor does it specifically disclose where passages disclosing these limitations may be found. Instead, a general discussion of disclosures found in the reference as they related to the invention is provided. Correction is required

Finally, with respect to the requirement of MPEP § 708.02(a)(I.)(I)(5) and item II.6.5 above, the Accelerated Examination Support Document must provide a showing of where each limitation of the claims finds support under 35 USC 112, first paragraph, in the written description of the specification. Section 9(C) of the Examination Support Document makes a general allegation that support for claim 1 may be found in paragraphs 3-8, and 21-42. However, this section fails to show where support for each specific claim limitation may be found. Clarification and identification of support **for each claim limitation** is required.

DECISION

For the above-stated reasons, the petition is **Dismissed**. The application will therefore be taken up by the examiner for action in its regular turn.

Petitioner is given a single opportunity to perfect the petition. Any request for reconsideration of this decision must be submitted within 1 (one) month or 30 (thirty) days, whichever is longer, (no extension of time under 37 CFR 1.136(a)) from the date of this decision in order to be considered timely. Any request for reconsideration must address the deficiencies indicated above.

Petitioner is reminded that, upon granting of the special status of the application on request for reconsideration, the application will be processed expeditiously. However, due to the dismissal of the instant petition, examination may not be completed within twelve months of the filing date of the application.

Deleted: include: 1) a statement that if the Office determines that all the claims presented are not directed to a single invention, applicant will make an election without traverse as a prerequisite to the grant of special status; 2) a detailed discussion with the particularity required by 37 CFR § 1.111(b) and (c) of how the claims distinguish over each cited reference.¶

Any inquiry regarding this decision should be directed Gail Hayes, Quality Assurance Specialist, at (571) 272-3591.

/Gail Hayes/

Gail Hayes, Quality Assurance Specialist
Technology Center 2100

UNITED STATES PATENT AND TRADEMARK OFFICE

UNITED STATES DEPARTMENT OF COMMERCE
United States Patent and Trademark Office
Address: COMMISSIONER FOR PATENTS
P.O. Box 1450
Alexandria, Virginia 22313-1450
www.uspto.gov

APPLICATION NO.	FILING DATE	FIRST NAMED INVENTOR	ATTORNEY DOCKET NO.	CONFIRMATION NO.
12/057,431	03/28/2008	Yayoi Fujiwara	JP920080016US1 (163-229)	1338

49267 7590 09/29/2008
KEUSEY, TUTUNJIAN & BITETTO, P.C.
20 CROSSWAYS PARK NORTH, SUITE 210
WOODBURY, NY 11797

EXAMINER
ZHEN, WEI Y

ART UNIT	PAPER NUMBER
2191	

MAIL DATE	DELIVERY MODE
09/29/2008	PAPER

Please find below and/or attached an Office communication concerning this application or proceeding.

The time period for reply, if any, is set in the attached communication.

UNITED STATES PATENT AND TRADEMARK OFFICE

Commissioner for Patents
United States Patent and Trademark Office
P.O. Box 1450
Alexandria, VA 22313-1450
www.uspto.gov

September 25, 2008

John G. Tutunjian
Keusey, Tutunjian and Bitetto, PC
20 Crossways Park North, Suite 210
Woodbury, NY 11797

In re Application of: Yayoi Fujiwara et al. Serial No.: 12/057,431 Filed: March 28, 2008 Docket: JP920080016US1 (163-229) Title: METHOD FOR AUTOMATING AN INTERNATIONALIZATION TEST IN A MULTILINGUAL WEB APPLICATION	DECISION ON PETITION TO MAKE SPECIAL FOR NEW APPLICATION UNDER 37 C.F.R. § 1.102 & M.P.E.P. § 708.02

This is a decision on the petition filed on August 21, 2008 to make the above-identified application special for accelerated examination procedure under 37 C.F.R. § 1.102(d).

The petition to make the application special is **GRANTED**.

REGULATION AND PRACTICE

A grantable petition to make special under 37 C.F.R. § 1.102(d) and pursuant to the "Change to Practice for Petitions in Patent Applications to Make Special and for Accelerated Examination" published in the Federal Register on June 26, 2006 (71 Fed. Reg. 36323), must satisfy the following conditions:

I. Conditions Regarding the Application:

1. the application must be a non-reissue utility or design application filed under 37 CFR 1.111(a);
2. the application, the petition and the required fees must be filed electronically using the USPTO's electronic filing system (EFS), or EFS-web; if not filed electronically, a statement asserting that EFS and EFS-web were not available during the normal business hours.
3. at the time of filing, the application must be complete under 37 CFR 1.51 and in condition for examination;
4. the application must contain three or fewer independent claims and twenty or fewer total claims and the claims must be directed to a single invention.

II. Conditions Regarding the Petition:

The petition must:

1. be filed with the application;

2. include a statement that applicant agrees not to separately argue the patentability of any independent claim during any appeal in the application;

3. include a statement that applicant agrees to make an election without traverse in a telephone interview.

4. include a statement that applicant agrees to conduct such an interview when requested by the examiner.

5. include a statement, made based on a good faith belief, that a preexamination search in compliance with the following requirements, was conducted, including an identification of the filed of search by United States class and subclass, where applicable, and for database searches, the search logic or chemical structure or sequence used as a query, the name of the file(s) searched and the database service, and the date of the search.

The preexamination search must:

5.1 involve U.S. patents and patent application publications, foreign patent documents, and non-patent literature, unless the applicant can justify with reasonable certainty that no references more pertinent than those already identified are likely to be found in the eliminated sources and includes such a justification with this statement;

5.2. be directed to the claimed invention and encompass all of the features of the claims, giving the claims the broadest reasonable expectation;

5.3. encompass the disclosed features that may be claimed.

6. must provide in support of the petition an accelerated examination support document. An accelerated examination support document must include:

6.1. an information disclosure statement (IDS) in compliance with 37 CFR 1.98 citing each reference deemed most closely related to the subject matter of each of the claims;

6.2. an identification of all the limitations in the claims that are disclosed by the reference specifying where the limitation is disclosed in the cited reference;

6.3. a detailed explanation of how each of the claims are patentable over the references cited with particularity required by 37 CFR 1.111(b) and (c);

6.4. a concise statement of the utility of the invention as defined in each of the independent claims (unless the application is a design application);

6.5. a showing of where each limitation of the claims finds support under 35 USC 112, first paragraph, in the written description of the specification. If applicable, the showing must also identify: (1) each means- (or step) plus-function claim element that invokes consideration under 35 UDC 112, sixth paragraph; and (2) the structure, material, or acts in the specification that corresponds to each means- (or step) plus-function claim element that invokes consideration under 35 UDC 112, sixth paragraph; if the application claims the benefit of one or more applications under title 35, United States Code, the showing must also include where each limitation of the claims finds support under 35 USC 112, first paragraph, in each such application in which such supports exists;

6.6. an identification of any cited references that may be disqualified under 35 USC 103(c).

REVIEW OF FACTS

The conditions I1-I4, II1-II4, II5.1-II5.3, II.6.1-II6.6 above are met. Therefore, the petition meets the required conditions to make the above-identified application special for accelerated examination procedure under 37 C.F.R. § 1.102(d).

DECISION

For the above-stated reasons, the petition is **Granted**.

The application is eligible for accelerated examination and the petition complies with the conditions for granting the application special status pursuant to the "Change to Practice for Petitions in Patent Applications to Make Special and for Accelerated Examination" published June 26, 2006, in the Federal Register. (71 Fed. Reg. 36323).

The prosecution of the instant application will be conducted expeditiously according to the following guidelines.

1. The application will be docketed to an examiner and taken up for action within two weeks of the date of this decision.

2. Restriction Practice:
   If the examiner determines that the claims are not directed to a single invention, a telephone request to elect one single invention will be made pursuant to MPEP 812.01. As a prerequisite to the grant of this petition, the applicant has agreed to make an oral election, by telephone, without traverse. If the applicant refuses to make an election without traverse, or the examiner cannot reach the applicant after a reasonable effort, the examiner will treat the first claimed invention (invention defined by claim 1) as having being constructively elected without traverse for examination.

3. Office action:
   If it is determined that, after appropriate consultation, there is a potential rejection or any other issue to be addressed, the examiner will telephone the applicant and arrange an interview to discuss and resolve the issue. An Office action, other than a Notice of Allowance and Fee(s) Due (Notice of Allowance), will not be issued unless either: 1) an interview was conducted but did not result in agreed to action that places the application in condition for allowance, or, 2) a determination is made that an interview would be unlikely to result in the application being placed in condition for allowance, and 3) an internal conference has been held to review any rejection of any claim.

4. Time for Reply:
   An Office action other than a Notice of Allowance or a final Office action will set a shortened statutory period of one month or thirty days, whichever is longer, for reply with no extension of time available under 37 CFR 1.136(a). Failure to timely file a reply

within this non-extendible period for reply will result in the abandonment of the application.

5. Reply by Applicant:
A timely reply to an Office action other than the Notice of Allowance must be submitted electronically via EFS or EFS-web and limited to addressing the rejections, objections and requirement made. Any amendment that attempts to: 1) add claims which would result in more than three pending independent claims or more than twenty pending total claims; 2) present claims not encompassed by the pre-examination search or an updated accelerated examination support document; or 3) present claims that are directed a non-elected invention or an invention other than that previously claimed and examined in the application, will be treated as not fully responsive and will not be entered.

For any amendment to the claims (including any new claim) that is not encompassed by the accelerated examination support document, applicant must provide an updated accelerated examination support document that encompasses the amended or new claims at the time of filing of the amendment.

To proceed expeditiously with the examination, it is recommended that a reply with amendments made to any claim or with any new claim being added be accompanied by an updated accelerated examination support document or a statement explaining how the amended or new claim is supported by the original accelerated examination support document.

6. Information Disclosure Statement (IDS):
Any IDS filed during prosecution must be submitted electronically via EFS or EFS-web, accompanied by an updated accelerated examination support document, and be in compliance with 37 CFR 1.97 and 1.98.

7. Post-Allowance Processing:
To expedite processing of the allowed application into a patent, the applicant must: 1) pay the required fees within one month of the date of the Notice of Allowance, and 2) not file any post allowance papers not required by the Office. In no event may the issue fee be paid and accepted later than three months from the date of the Notice of Allowance.

8. After-Final and Appeal Procedures:
To expedite prosecution, after receiving the final Office action, applicant must: 1) promptly file a notice of appeal, an appeal brief and appeal fees; and 2) not request a pre-appeal brief conference.

Any amendment, affidavit or other evidence filed after final Office action must comply with applicable rules and the requirements outlined in numbered paragraphs 5 and 6 above.

On appeal, the application will proceed according to normal appeal procedures. After appeal, the application will again be treated special.

9. Proceedings Outside the Normal Examination Process:
   If the application becomes involved in a proceeding that is outside the normal examination process (e.g., a secrecy order, national security review, interference proceeding, petitions under 37 CFR 1.181, 182 or 183), the application will be treated special before and after such proceeding.

10. Final Disposition:
    The twelve-month goal of this accelerated examination procedure ends with a final disposition. The mailing of a final Office action, a Notice of Allowance, the filing of a Notice of Appeal, or the filing of a Request for Continued Examination (RCE) is the final disposition.

If, during prosecution, a paper is not filed electronically using EFS-web, a reply is filed but is not fully responsive, the application is involved in an appeal, or a proceeding outside normal examination process, the application will still be examined expeditiously, however, the final disposition may occur more than twelve months from the filing of the application.

Any inquiry regarding this decision should be directed Gail Hayes, Quality Assurance Specialist, at (571) 272-3591.

/Gail Hayes/

Gail Hayes, Quality Assurance Specialist
Technology Center 2100

UNITED STATES PATENT AND TRADEMARK OFFICE

Commissioner for Patents
United States Patent and Trademark Office
P.O. Box 1450
Alexandria, VA 22313-1450
www.uspto.gov

LEYDIG VOIT & MAYER, LTD
700 THIRTEENTH ST. NW
SUITE 300
WASHINGTON DC 20005-3960

MAILED

NOV 13 2009

OFFICE OF PETITIONS

In re Application of	:	
Joung Il Kim et al.	:	
Application No. 12/057,453	:	NOTICE
Filed: March 28, 2008	:	
Attorney Docket No. 404155	:	

This is a notice regarding your request for acceptance of a fee deficiency submission under 37 CFR 1.28.

The Office no longer investigates or rejects original or reissue applications under 37 CFR 1.56. **1098 Off. Gaz. Pat. Office 502 (January 3, 1989)**. Therefore, nothing in this Notice is intended to imply that an investigation was done.

Your fee deficiency submission under 37 CFR 1.28 is hereby **ACCEPTED**.

This application is no longer entitled to small entity status. Accordingly, all future fees paid in this application must be paid at the large entity rate.

Inquiries related to this communication should be directed to Terri Johnson at (571) 272-2991.

Chris Bottorff
Petitions Examiner
Office of Petitions

IN THE UNITED STATES PATENT AND TRADEMARK OFFICE

Patent Application No. 12/057,453

Applicant: KIM et al.

Filed: June 12, 2009

TC/AU: 1794

Examiner: V. Katz

Docket No.: 404155

Customer No.: 23548

Commissioner for Patents
U.S. Patent and Trademark Office
Randolph Building
401 Dulany Street
Alexandria, VA 22314

REQUEST FOR CORRECTION OF ENTITY STATUS

Dear Sir:

Through an error made in good faith, small entity status was claimed for the referenced patent application. Applicants now request, pursuant to 37 CFR 1.28(c), correction of the error by changing the status of the Applicants to large entity and submit the deficiency in fees previously paid, as itemized below.

TYPE OF FEE	AMOUNT PAID	DATE PAID	DEFICIENCY OWED
Basic Filing Fee	$75	March 28, 2008	$255
Search Fee	$255	March 28, 2008	$285
Examination Fee	$105	March 28, 2008	$115
Total			$655

11/12/2009 LDIEP1 00000001 121216 12057453
01 FC:2461 655.00 DA

The total fee deficiency of $655 should be charged to Deposit Account 12-1216. Any additional amount due should be charged to Deposit Account 12-1216.

Respectfully submitted,

Jeffrey A. Wyand, Reg. No. 29,458
LEYDIG, VOIT & MAYER
700 Thirteenth Street, N.W., Suite 300
Washington, DC 20005-3960
(202) 737-6770 (telephone)
(202) 737-6776 (facsimile)

Date: July 15, 2009
JAW:ves

UNITED STATES PATENT AND TRADEMARK OFFICE

Commissioner for Patents
United States Patent and Trademark Office
P.O. Box 1450
Alexandria, VA 22313-1450
www.uspto.gov

GIFFORD, KRASS, SPRINKLE,ANDERSON & CITKOWSKI, P.C
PO BOX 7021
TROY MI 48007-7021

COPY MAILED

JUN 0 9 2008

OFFICE OF PETITIONS

In re Application of	:
Marshall Graham Bailey	: DECISION GRANTING
Application No. 12/057,505	: PETITION
Filed: March 28, 2008	:
Attorney Docket No. CAF-34903/03	:

This is a decision on the filing date petition filed May 6, 2008, under 37 CFR 1.57 requesting that the above referenced application be accorded a filing date of March 28, 2008. The petition is being treated under 37 CFR 1.53 (e)(2)[1]

The application was filed on March 28, 2008. However, on April 16, 2007 the Office of Initial Patent Examination mailed a Notice of Incomplete Application stating that the application had not been filed with drawings and thus, the application could not be accorded a filing date.

In response, the present petition was filed. Petitioner admits that the drawings were inadvertently omitted but argues that the instant application claimed priority to a prior filed application which contained the drawings.

Petitioner's arguments and evidence have been considered. However, it is controlling that a review of the application confirms that as filed, the application contained at least one method claim. MPEP 601.01(f) provides that:

> It has been USPTO practice to treat an application that contains at least one process or method claim as an application for which a drawing is not necessary for an understanding of the invention under 35 U.S.C. 113 (first sentence).

Thus, pursuant to § 601.01(f), a drawing is not considered essential for a filing date. Thus, the application is entitled to a filing date without drawings present in the application.

---

[1] Any request for review of a notification pursuant to paragraph (e)(1) of this section, or a notification that the original application papers lack a portion of the specification or drawing(s), must be by way of a petition pursuant to this paragraph accompanied by the fee set forth in § 1.17(f). In the absence of a timely (§ 1.181(f)) petition pursuant to this paragraph, the filing date of an application in which the applicant was notified of a filing error pursuant to paragraph (e)(1) of this section will be the date the filing error is corrected.

Accordingly, the Office should have mailed a Notice of Omitted Items and not a Notice of Incomplete Nonprovisional Application. As stated in MPEP 601.01(g), if an application is entitled to a filing date, the mailing of a Notice of Omitted Items will permit *inter alia*:

> If an application was filed on or after September 21, 2004, and contains a claim under 37 CFR 1.55 for priority of a prior-filed foreign application, or a claim under 37 CFR 1.78 for the benefit of a prior-filed provisional, nonprovisional, or international application that was present on the filing date of the application, and the omitted portion of the drawing(s) was inadvertently omitted from the application and is completely contained in the prior-filed application, applicant may submit an amendment to include the inadvertently omitted portion of the drawing(s) pursuant to 37 CFR 1.57(a). The amendment should be submitted in response to the Office action and must comply with 37 CFR 1.57(a) and 37 CFR 1.121. See MPEP § 201.17.

No petition is required. The amendment to include the inadvertently omitted drawings will be considered by the examiner.

To the extent the instant petition requests a filing date of March 28, 2008 with no drawings present in the application, the petition is **GRANTED**.

Given the basis for granting this petition, the petition fee is being refunded to the credit card used.

The Office of Patent Application Processing (OPAP) has been advised of this decision. Pursuant to this decision, the application has been referred to OPAP for:

- correction of the filing date to March 28, 2008
- for indication in Office records, as appropriate, that "0" sheets of drawings were present on filing and
- for issuance of a filing receipt.

Entry of the amendment filed March 28, 2008 will be determined by the examiner.

Telephone inquiries concerning this matter should be directed to Senior Petitions Attorney Patricia Faison-Ball at (571) 272-3212.

Anthony Knight
Supervisory Petitions Examiner
Office of Petitions

UNITED STATES PATENT AND TRADEMARK OFFICE

Commissioner for Patents
United States Patent and Trademark Office
P.O. Box 1450
Alexandria, VA 22313-1450
www.uspto.gov

DAVIS & BUJOLD, P.L.L.C.
112 PLEASANT STREET
CONCORD, NH 03301

MAILED

AUG 12 2009

OFFICE OF PETITIONS

In re Application of	:	
Thomas Edward Coe	:	DECISION ON PETITION
Application No. 12/057,529	:	TO WITHDRAW
Filed: March 28, 2008	:	FROM RECORD
Attorney Docket No. COETHO P02AUSP1	:	

This is a decision on the Request to Withdraw as attorney or agent of record under 37 C.F.R. § 1.36(b), filed December 18, 2008.

The request is **NOT APPROVED**.

A grantable request to withdraw as attorney/agent of record must be signed by every attorney/agent seeking to withdraw or contain a clear indication that one attorney is signing on behalf of another/others.

The request was signed by Michael J. Bojold, Gary D. Clapp, Scott A. Daniels and Jay S. Franklin on behalf of all attorneys of record; however, the request does not include a Customer Number. Accordingly, since the practitioners were appointed by a Customer Number upon filing of the instant application, the Request must reflect withdrawal of practitioners associated with same Customer Number.

A review of the file record indicates that Scott Daniels does not have power of attorney in this patent application. *See* MPEP 403: Where an applicant appoints all of the practitioners associated with a Customer Number as well as a list of individually named practitioners, such action would be treated as only an appointment of all of the practitioners associated with a Customer Number due to the potential for confusion and data entry errors in entering registration numbers from plural sources. Furthermore, Office computer systems do not allow for entry of both a power of attorney to a list of practitioners associated with a Customer Number and a list of practitioners.

The Office will only accept correspondence address changes to the most current address information provided for the assignee of the entire interest *who properly became of record under 37 CFR 3.71,* or, if no assignee of the entire interest has properly been made of record, the most current address information provided for the first named inventor. 37 CFR 3.71(c) states:

> *An assignee becomes of record either in a national patent application or a reexamination proceeding by filing a statement in compliance with § 3.73(b) that is signed by a party who is authorized to act on behalf of the assignee.*

Further, the request cannot be approved since; the proper certifications were not made. Pursuant to 37 CFR 10.40, the Office will require the practitioner(s) to certify that he, she or they have: (1) given reasonable notice to the client, prior to the expiration of the reply period, that the practitioner(s) intends to withdraw from employment; (2) delivered to the client or a duly authorized representative of the client all papers and property (including funds) to which the client is entitled; and (3) notified the client of any replies that may be due and the time frame within which the client must respond.

All future communications from the Office will continue to be directed to the above-listed address until otherwise properly notified.

There are no outstanding Office actions that require a reply from the applicant.

Telephone inquires concerning this decision should be directed to Alicia Kelley at (571) 272-6059. All other inquires concerning either the examination or status of the application should be directed to the Technology Center.

/Liana Walsh/
Liana Walsh
Petitions Examiner
Office of Petitions

UNITED STATES PATENT AND TRADEMARK OFFICE

UNITED STATES DEPARTMENT OF COMMERCE
United States Patent and Trademark Office
Address: COMMISSIONER FOR PATENTS
P.O. Box 1450
Alexandria, Virginia 22313-1450
www.uspto.gov

APPLICATION NO.	FILING DATE	FIRST NAMED INVENTOR	ATTORNEY DOCKET NO.	CONFIRMATION NO.
12/057,575	03/28/2008	Margaret Ann Ruth Beynon	GB920080073US1 (3025)	1598

78290 7590 05/23/2008
Oppenheimer Wolff & Donnelly LLP
Plaza VII, Suite 3300
45 South Seventh Street
Minneapolis, MN 55402-1609

EXAMINER
CALDWELL, ANDREW T

ART UNIT	PAPER NUMBER
2142	

MAIL DATE	DELIVERY MODE
05/23/2008	PAPER

Please find below and/or attached an Office communication concerning this application or proceeding.

The time period for reply, if any, is set in the attached communication.

UNITED STATES PATENT AND TRADEMARK OFFICE

Commissioner for Patents
United States Patent and Trademark Office
P.O. Box 1450
Alexandria, VA 22313-1450
www.uspto.gov

OPPENHEIMER WOLFF & DONNELLY LLP
PLAZA VII, SUITE 3300
45 SOUTH SEVENTH STREET
MINNEAPOLIS MN 55402-1609

In re Application of: Margaret Beynon, et al. Serial No.: 12/057575 Filed: Mar 28, 2008 Docket: GB920080073US1 (3025) Title: ONE-RESPONDER EMAIL FEATURE	DECISION ON PETITION TO MAKE SPECIAL FOR NEW APPLICATION UNDER 37 C.F.R. § 1.102 & M.P.E.P. § 708.02

This is a decision on the petition filed on Mar 28, 2008 to make the above-identified application special for accelerated examination procedure under 37 C.F.R. § 1.102(d).

The petition to make the application special is **DISMISSED**.

REGULATION AND PRACTICE

A grantable petition to make special under 37 C.F.R. § 1.102(d) and pursuant to the "Change to Practice for Petitions in Patent Applications to Make Special and for Accelerated Examination" published in the Federal Register on June 26, 2006 (71 Fed. Reg. 36323), must satisfy the following conditions:

I. Conditions Regarding the Application:

1. the application must be a non-reissue utility or design application filed under 37 CFR 1.111(a);
2. the application, the petition and the required fees must be filed electronically using the USPTO's electronic filing system (EFS), or EFS-web; if not filed electronically, a statement asserting that EFS and EFS-web were not available during the normal business hours.
3. at the time of filing, the application must be complete under 37 CFR 1.51 and in condition for examination;
4. the application must contain three or fewer independent claims and twenty or fewer total claims and the claims must be directed to a single invention.

II. Conditions Regarding the Petition:

The petition must:

1. be filed with the application;

2. include a statement that applicant agrees not to separately argue the patentability of any independent claim during any appeal in the application;

3. include a statement that applicant agrees to make an election without traverse in a telephone interview.

4. include a statement that applicant agrees to conduct such an interview when requested by the examiner.

5. include a statement, made based on a good faith belief, that a preexamination search in compliance with the following requirements, was conducted, including an identification of the filed of search by United States class and subclass, where applicable, and for database searches, the search logic or chemical structure or sequence used as a query, the name of the file(s) searched and the database service, and the date of the search.

The preexamination search must:

5.1 involve U.S. patents and patent application publications, foreign patent documents, and non-patent literature, unless the applicant can justify with reasonable certainty that no references more pertinent than those already identified are likely to be found in the eliminated sources and includes such a justification with this statement;

5.2. be directed to the claimed invention and encompass all of the features of the claims, giving the claims the broadest reasonable interpretation;

5.3. encompass the disclosed features that may be claimed.

6. must provide in support of the petition an accelerated examination support document. An accelerated examination support document must include:

6.1. an information disclosure statement (IDS) in compliance with 37 CFR 1.98 citing each reference deemed most closely related to the subject matter of each of the claims;

6.2. an identification of all the limitations in the claims that are disclosed by the reference specifying where the limitation is disclosed in the cited reference;

6.3. a detailed explanation of how each of the claims is patentable over the references cited with particularity required by 37 CFR 1.111(b) and (c);

6.4. a concise statement of the utility of the invention as defined in each of the independent claims (unless the application is a design application);

6.5. a showing of where each limitation of the claims finds support under 35 USC 112, first paragraph, in the written description of the specification. If applicable, the showing must also identify: (1) each means- (or step) plus-function claim element that invokes consideration under 35 USC 112, sixth paragraph; and (2) the structure, material, or acts in the specification that corresponds to each means- (or step) plus-function claim element that invokes consideration under 35 USC 112, sixth paragraph; if the application claims the benefit of one or more applications under title 35, United States Code, the showing must also include where each limitation of the claims finds support under 35 USC 112, first paragraph, in each such application in which such supports exists;

6.6. an identification of any cited references that may be disqualified under 35 USC 103(c).

REVIEW OF FACTS

The conditions I.1 to II.4 above are considered to have been met. However, the petition fails to comply with conditions II.5 and II.6 above. Therefore, the petition fails to meet the required conditions to be accorded special status under the accelerated examination procedure.

Regarding item II.5.1 above, for classification searches, MPEP 719.05 states that a *classification search* is defined as a complete search of all the documents in a particular subclass, and it is not limited by any text query or other means. It appears that the database searches utilized the identified class/subclasses (***709/206, 707/10, 104.1, and 705/7-9***) in combination with the search logic in the database searches. Petitioner should clarify whether the classification search (***709/206, 707/10, 104.1, and 705/7-9***) was done separately from the database search per MPEP 719.05 or if the classification and database search were combined with the logic shown in the USPTO EAST database search. Clarification is required.

Regarding the requirement of MPEP § 708.02(a)(I.)(I)(2) and items 6.2-6.3 above; note item 6.2 requires an identification of all the limitations in the claims that are disclosed by the reference specifying where the limitation is disclosed in the cited reference and item 6.3 requires a detailed explanation of how each of the claims is patentable over the references cited with particularity required by 37 CFR 1.111(b) and (c). Though Discussion in Section 9(B) provides sufficient discussion of general teaching of the references with respect to the patentability discussion, the Accelerated Examination Support Document **does not** provide an identification of all the limitations in the claims that are disclosed by the reference specifying where the limitation is disclosed in the cited reference. Applicants should specify where in each of the cited references the particular claim limitations are found. This process is intended to be analogous to the analysis an examiner uses when locating a relevant prior art reference and then determining whether the reference contains the claimed limitation. Applicants should point out what are considered to be the relevant representations of the limitation in the reference. Petitioner is required to provide a detail discussion of ***each claim limitation as recited in the claim and corresponding disclosure*** within the reference, citing to specific relevant portions of each reference by way of figure, page, paragraph and line numbers, as appropriate. Correction is required.

Regarding to the requirement of MPEP § 708.02(a)(I.)(I)(5) and item II.6.5 above, the Accelerated Examination Support Document identifies at least paragraphs 0006-0010 and steps 201-207 of Fig. 2 of the instant specification as providing support for the sole claim 1. However, the requirement of MPEP § 708.02(a)(I.)(I)(5) and item II.6.5 above clearly states that the petitioner is required to **specifically identify what corresponding elements in the figures** and **specifically identify where the corresponding written description in the cited portions of the instant specification** can find support under 35 U.S.C. § 112, first paragraph **for each limitation of the claim 1**. It is pointed out that the written description requirement has several policy objectives. The essential goal of the description of the invention requirement is to clearly convey the information that an applicant has invented the subject matter which is claimed. Another objective is to put the examiner in possession of what the applicant claims as the invention – the written description requirement implements the principle that a patent application must describe

the technology that is sought to be patented; the requirement serves both to satisfy the inventor's obligation to disclose the technologic knowledge upon which the application is based and to demonstrate that the applicants were in possession of the invention that is claimed. Further, the written description requirement promotes the progress of expedite examination by ensuring that applicants adequately describe their inventions in sufficient detail in their applications in exchange for the right to take-up out of order of examination.

Thus, a general statement that all limitations of claim(s) can be found in at least 0006-0010 and steps 201-207 of Fig. 2 of the specification cannot be accepted to satisfy such a requirement of MPEP § 708.02(a)(I.)(I)(5) and item II.6.5 above. Petitioner is required to identify each claim limitations and the corresponding support in the cited portions ***(page, line, and corresponding element in the figures)*** where the instant claim language finds corresponding support.

DECISION

For the above-stated reasons, the petition is **DISMISSED**. The application will therefore be taken up by the examiner for action in its regular turn.

Petitioner is given a single opportunity to perfect the petition. Any request for reconsideration of this decision must be submitted within 1 (one) month or 30 (thirty) days, whichever is longer, (no extension of time under 37 CFR 1.136(a)) from the date of this decision in order to be considered timely. Any request for reconsideration must address the deficiencies indicated above.

Petitioner is reminded that, upon granting of the special status of the application on request for reconsideration, the application will be processed expeditiously. However, due to the dismissal of the instant petition, examination may not be completed within twelve months of the filing date of the application.

Any inquiry regarding this decision should be directed the undersigned whose telephone number is (571) 272-4147.

If attempts to reach the undersigned by telephone are unsuccessful, Tod Swann, Quality Assurance Specialist, can be reached at (571) 272-3612.

Kim Huynh,
Quality Assurance Specialist
Technology Center 2100
Computer Architecture, Software and Information Security

UNITED STATES PATENT AND TRADEMARK OFFICE

UNITED STATES DEPARTMENT OF COMMERCE
United States Patent and Trademark Office
Address: COMMISSIONER FOR PATENTS
P.O. Box 1450
Alexandria, Virginia 22313-1450
www.uspto.gov

APPLICATION NO.	FILING DATE	FIRST NAMED INVENTOR	ATTORNEY DOCKET NO.	CONFIRMATION NO.
12/057,575	03/28/2008	Margaret Ann Ruth Beynon	GB920080073US1 (3025)	1598

78290 7590 07/22/2008
Oppenheimer Wolff & Donnelly LLP
Plaza VII, Suite 3300
45 South Seventh Street
Minneapolis, MN 55402-1609

EXAMINER
COULTER, KENNETH R

ART UNIT	PAPER NUMBER
2141	

MAIL DATE	DELIVERY MODE
07/22/2008	PAPER

Please find below and/or attached an Office communication concerning this application or proceeding.

The time period for reply, if any, is set in the attached communication.

UNITED STATES PATENT AND TRADEMARK OFFICE

Commissioner for Patents
United States Patent and Trademark Office
P.O. Box 1450
Alexandria, VA 22313-1450
www.uspto.gov

OPPENHEIMER WOLFF & DONNELLY LLP
PLAZA VII, SUITE 3300
45 SOUTH SEVENTH STREET
MINNEAPOLIS MN 55402-1609

In re Application of: Margaret Beynon, et al. Serial No.: 12/057575 Filed: Mar 28, 2008 Docket: GB920080073US1 (3025) Title: ONE-RESPONDER EMAIL FEATURE	DECISION ON PETITION TO MAKE SPECIAL FOR NEW APPLICATION UNDER 37 C.F.R. § 1.102 & M.P.E.P. § 708.02

This is a decision on the renewed petition filed on June 19, 2008 to make the above-identified application special for accelerated examination procedure under 37 C.F.R. § 1.102(d). The original petition, submitted on Mar 28, 2008 was dismissed in the decision mailed on May 23, 2008.

In the explanation of patentability discussion, section 9(C) of the Accelerated Examination Support Document, the Petitioner indicates that the feature of "wherein the option presented to each of the group of recipients to accept the task request within the email clients operated by each of the group of recipients is automatically removed *responsive to the acceptance email message being received from the accepting recipient*" is not taught by any of the reference. It is deemed necessary to clarify that the Smith reference teaches that "the option presented... is automatically removed"; however, the act removal is NOT responsive to the acceptance of email messages.

The petition to make the application special is **GRANTED**.

The application is eligible for accelerated examination and the petition complies with the conditions for granting the application special status pursuant to the "Change to Practice for Petitions in Patent Applications to Make Special and for Accelerated Examination" published June 26, 2006, in the Federal Register: (71 Fed. Reg. 36323).

The prosecution of the instant application will be conducted expeditiously according to the following guidelines.

1. The application will be docketed to an examiner and taken up for action within two weeks of the date of this decision.

2. Restriction Practice:
   If the examiner determines that the claims are not directed to a single invention, a telephone request to elect one single invention will be made pursuant to MPEP 812.01. As a prerequisite to the grant of this petition, the applicant has agreed to make an oral election, by telephone, without traverse. If the applicant refuses to make an election without traverse, or the examiner cannot reach the applicant after a reasonable effort, the examiner will treat the first claimed invention (invention defined by claim 1) as having being constructively elected without traverse for examination.

3. Office action:
   If it is determined that, after appropriate consultation, there is a potential rejection or any other issue to be addressed, the examiner will telephone the applicant and arrange an interview to discuss and resolve the issue. An Office action, other than a Notice of Allowance and Fee(s) Due (Notice of Allowance), will not be issued unless either: 1) an interview was conducted but did not result in agreed to action that places the application in condition for allowance, or, 2) a determination is made that an interview would be unlikely to result in the application being placed in condition for allowance, and 3) an internal conference has been held to review any rejection of any claim.

4. Time for Reply:
   An Office action other than a Notice of Allowance or a final Office action will set a shortened statutory period of one month or thirty days, whichever is longer, for reply with no extension of time available under 37 CFR 1.136(a). Failure to timely file a reply within this non-extendible period for reply will result in the abandonment of the application.

5. Reply by Applicant:
   A timely reply to an Office action other than the Notice of Allowance must be submitted electronically via EFS or EFS-web and limited to addressing the rejections, objections and requirement made. Any amendment that attempts to: 1) add claims which would result in more than three pending independent claims or more than twenty pending total claims; 2) present claims not encompassed by the pre-examination search or an updated accelerated examination support document; or 3) present claims that are directed a non-elected invention or an invention other than that previously claimed and examined in the application, will be treated as not fully responsive and will not be entered.

   For any amendment to the claims (including any new claim) that is not encompassed by the accelerated examination support document, applicant must provide an updated accelerated examination support document that encompasses the amended or new claims at the time of filing of the amendment.

   To proceed expeditiously with the examination, it is recommended that a reply with amendments made to any claim or with any new claim being added be accompanied by an updated accelerated examination support document or a statement explaining how the amended or new claim is supported by the original accelerated examination support document.

6. Information Disclosure Statement (IDS):
   Any IDS filed during prosecution must be submitted electronically via EFS or EFS-web, accompanied by an updated accelerated examination support document, and be in compliance with 37 CFR 1.97 and 1.98.

7. Post-Allowance Processing:
   To expedite processing of the allowed application into a patent, the applicant must: 1) pay the required fees within one month of the date of the Notice of Allowance, and 2) not file any post allowance papers not required by the Office. In no event may the issue fee be paid and accepted later than three months from the date of the Notice of Allowance.

8. After-Final and Appeal Procedures:
   To expedite prosecution, after receiving the final Office action, applicant must: 1) promptly file a notice of appeal, an appeal brief and appeal fees; and 2) not request a pre-appeal brief conference.

   Any amendment, affidavit or other evidence filed after final Office action must comply with applicable rules and the requirements outlined in numbered paragraphs 5 and 6 above.

   On appeal, the application will proceed according to normal appeal procedures. After appeal, the application will again be treated special.

9. Proceedings Outside the Normal Examination Process:
   If the application becomes involved in a proceeding that is outside the normal examination process (e.g., a secrecy order, national security review, interference proceeding, petitions under 37 CFR 1.181, 182 or 183), the application will be treated special before and after such proceeding.

10. Final Disposition:
    The twelve-month goal of this accelerated examination procedure ends with a final disposition. The mailing of a final Office action, a Notice of Allowance, the filing of a Notice of Appeal, or the filing of a Request for Continued Examination (RCE) is the final disposition.

If, during prosecution, a paper is not filed electronically using EFS-web, a reply is filed but is not fully responsive, the application is involved in an appeal, or a proceeding outside normal examination process, the application will still be examined expeditiously, however, the final disposition may occur more than twelve months from the filing of the application. In addition, Applicant is reminded that due to the dismissal of the previous petition submission, examination may not be completed within twelve months of the filing date of the application.

Any inquiry regarding this decision should be directed the undersigned whose telephone number is (571) 272-4147.

If attempts to reach the undersigned by telephone are unsuccessful, Tod Swann, Quality Assurance Specialist, can be reached at (571) 272-3612.

Kim Huynh, Quality Assurance Specialist
Technology Center 2100
Computer Architecture, Software and Information Security

UNITED STATES PATENT AND TRADEMARK OFFICE

Commissioner for Patents
United States Patent and Trademark Office
P.O. Box 1450
Alexandria, VA 22313-1450
www.uspto.gov

KNOBBE MARTENS OLSON & BEAR LLP
2040 MAIN STREET
FOURTEENTH FLOOR
IRVINE CA 92614

COPY MAILED
JAN 08 2009

In re Application of	:	
Samuel M. Shaolian et al	:	DECISION REFUSING STATUS
Application No. 12/057,594	:	UNDER 37 CFR 1.47(a)
Filed: March 28, 2008	:	
Attorney Docket No. MICA.090A	:	

This is in response to the petition under 37 CFR 1.47(a), filed November 17, 2008.

The petition is dismissed.

Rule 47 applicant is given TWO MONTHS from the mailing date of this decision to reply, correcting the below-noted deficiencies. Any reply should be entitled "Request for Reconsideration of Petition Under 37 CFR 1.47(a)," and should only address the deficiencies noted below, except that the reply may include an oath or declaration executed by the non-signing inventor. **FAILURE TO RESPOND WILL RESULT IN ABANDONMENT OF THE APPLICATION.** Any extensions of time will be governed by 37 CFR 1.136(a).

A grantable petition under 37 CFR 1.47(a) requires: (1) proof that the non-signing inventor cannot be reached or refuses to sign the oath or declaration after having been presented with the application papers (specification, claims and drawings); (2) an acceptable oath or declaration in compliance with 35 U.S.C. §§ 115 and 116; (3) the petition fee; and (4) a statement of the last known address of the non-signing inventor. Applicant lacks items (1) and (4) set forth above.

As to item (1), rule 47 applicant must demonstrate with documented evidence that an inventor refuses to join in the application after having been presented with the application papers (specification, claims, drawings and oath or declaration). There is no indication herein that joint inventor Le Le was presented with a copy of the complete application papers for this application. If the joint inventors were not presented with a copy of the application papers for this application, then the joint inventors could not attest that they have "reviewed and understand the application

papers" and could not execute the declaration they were requested to sign. Did inventor Le receive a copy of the application papers? The fact that an application may contain proprietary information does not relieve the rule 47 applicant of the responsibility to present the application papers to the joint inventors if the inventors are willing to receive the papers in order to sign the oath or declaration. Unless petitioner can show that a copy of the application papers was presented to the joint inventors , then petitioner will have to mail a copy of the complete application papers (specification, claims and drawings) to the last known address of the joint inventors , return receipt requested. A cover letter of instructions should accompany the mailing of the application papers setting a deadline or a statement that no response will constitute a refusal. This sort of ultimatum lends support to a finding of refusal by conduct. **The proof of the pertinent events should be made by a statement of someone with firsthand knowledge of the events and should include documentary evidence, such as certified mail return receipt, cover letter of instructions, telegram, etc.** *See* MPEP 409.03(d).

Where there is an express or oral refusal, that fact, along with the time and place of the refusal, must be stated in an affidavit or declaration **by the party to whom the refusal was made.** Where there is a written refusal, a copy of the document(s) evidencing that refusal must be made part of the affidavit or declaration.

When it is concluded by the rule 47 applicant that an omitted inventor's conduct constitutes a refusal, all facts upon which that conclusion is based should be stated in an affidavit or declaration. If there is documentary evidence to support facts alleged in the affidavit or declaration, such evidence must be submitted.

Whenever an omitted inventor gives a reason for refusing to sign the application oath or declaration, that reason should be stated in the affidavit or declaration.

As to item (4), a statement of the inventor's last known address is missing and is required.

Further correspondence with respect to this matter should be addressed as follows:

By mail: Mail Stop PETITIONS
Commissioner for Patents
Post Office Box 1450
Alexandria, VA 22313-1450

By hand: Customer Service Window
Mail Stop Petitions
Randolph Building
401 Dulany Street
Alexandria, VA 22314

By fax: (571) 273-8300
ATTN: Office of Petitions

Telephone inquiries should be directed to the undersigned at (571) 272-3208.

Karen Creasy
Petitions Examiner
Office of Petitions

UNITED STATES PATENT AND TRADEMARK OFFICE

Commissioner for Patents
United States Patent and Trademark Office
P.O. Box 1450
Alexandria, VA 22313-1450
www.uspto.gov

KNOBBE MARTENS OLSON & BEAR LLP
2040 MAIN STREET
FOURTEENTH FLOOR
IRVINE CA 92614

MAILED

MAY 07 2009

OFFICE OF PETITIONS

In re Application of	:	
Samuel M. Shaolian et al	:	DECISION GRANTING STATUS
Application No. 12/057,594	:	UNDER 37 CFR 1.47(a)
Filed: March 28, 2008	:	
Attorney Docket No. MICA.090A	:	

This is in response to the renewed petition under 37 CFR 1.47(a), filed April 16, 2009.

The petition is **GRANTED.**

Petitioner has shown that the non-signing inventor has refused to join in the filing of the above-identified application.

The application and papers have been reviewed and found in compliance with 37 CFR 1.47(a). This application is hereby accorded Rule 1.47(a) status.

As provided in 37 CFR 1.47(c), this Office will forward notice of this application's filing to the non-signing inventor at the address given in the petition. Notice of the filing of this application will also be published in the Official Gazette.

This application is being referred to the Office of Patent Application Processing for pre-examination processing.

Telephone inquiries regarding this decision should be directed to the undersigned at (571) 272-3208.

Karen Creasy

Karen Creasy
Petitions Examiner
Office of Petitions

UNITED STATES PATENT AND TRADEMARK OFFICE

UNITED STATES DEPARTMENT OF COMMERCE
United States Patent and Trademark Office
Address: COMMISSIONER FOR PATENTS
P.O. Box 1450
Alexandria, Virginia 22313-1450
www.uspto.gov

APPLICATION NO.	FILING DATE	FIRST NAMED INVENTOR	ATTORNEY DOCKET NO.	CONFIRMATION NO.
12/057,610	03/28/2008	Hideya KASAHARA	324510US26	1657

7590 08/10/2009
OBLON, SPIVAK, MCCLELLAND MAIER & NEUSTADT, P.C.
1940 DUKE STREET
ALEXANDRIA, VA 22314

EXAMINER
HEITBRINK, TIMOTHY W

ART UNIT	PAPER NUMBER
1791	

NOTIFICATION DATE	DELIVERY MODE
08/10/2009	ELECTRONIC

DECISION GRANTING PETITION UNDER 37 CFR 1.138(d)

The declaration of express abandonment is recognized

This is in response to the petition under 37 CFR 1.138(d), requesting for a refund of any previously paid search fee and excess claims fee in the above-identified application.

The petition is granted.

The express abandonment is recognized. Any previously paid search fee and excess claims fee are hereby refunded.

Telephone inquiries should be directed to the Office of Data Management at (571) 272-4200.

Patent Publication Branch
Office of Data Management

08/07/2009 KPOWELL
03/28/2008 INTEFSW 00007833 12057610
02 FC:1111 -510.00 OP

08/07/2009 KPOWELL
03/28/2008 INTEFSW 00007833 12057610
01 FC:1111 -510.00 OP

FORM PET651G (Rev. 08/07)

Refund Ref:
08/07/2009 0030073119

Credit Card Refund Total: $510.00

Am Exp..: XXXXXXXXXXX1009

UNITED STATES PATENT AND TRADEMARK OFFICE

Commissioner for Patents
United States Patent and Trademark Office
P.O. Box 1450
Alexandria, VA 22313-1450
www.uspto.gov

BANNER & WITCOFF, LTD.
1100 13TH STREET, N.W.
SUITE 1200
WASHINGTON DC 20005-4051

COPY MAILED
FEB 01 2010

In re Application of	:	
Mark F. MOSSER, et al	:	
Application No. 12/057,620	:	DECISION ON PETITION
Filed: March 28, 2008	:	TO MAKE SPECIAL UNDER
Attorney Docket No. 007397.00002	:	37 CFR 1.102(c)(1)
	:	

This is a decision on the petition under 37 CFR 1.102(c)(1), filed November 10, 2009, to make the above-identified application special based on applicant's age as set forth in M.P.E.P. § 708.02, Section IV.

The petition is **GRANTED**.

A grantable petition to make an application special under 37 CFR 1.102(c)(1) and MPEP § 708.02, Section IV: Applicant's Age must be accompanied by evidence showing that at least one of the applicants is 65 years of age, or more, such as a birth certificate or a statement by applicant. No fee is required

The instant petition includes a copy of Applicant Mark F. Mosser drivers license. Accordingly, the above-identified application has been accorded "special" status.

Telephone inquiries concerning this decision should be directed to the undersigned at 571-272-6735.

All other inquiries concerning either the examination or status of the application should be directed to the Technology Center.

The application is being forwarded to Technology Center Art Unit 1792 for action on the merits commensurate with this decision.

/DCG/
Diane C. Goodwyn
Petitions Examiner
Office of Petitions

UNITED STATES PATENT AND TRADEMARK OFFICE

Commissioner for Patents
United States Patent and Trademark Office
P.O. Box 1450
Alexandria, VA 22313-1450
www.uspto.gov

CANTOR COLBURN LLP
IBM Yorktown
20 Church Street, 22nd Floor
Hartford, CT 06103

APR 22 2008

In re Application of:	:	
Veeraraghaven S. Basker et al.	:	
Serial No.: 12/057,688	:	DECISION ON PETITION TO
Filed: March 28, 2008	:	MAKE SPECIAL FOR NEW
Docket No.: YOR920070646US1	:	APPLICATION UNDER 37
Title: SELECTIVE SILICIDE FORMATION BY	:	C.F.R. § 1.102 & M.P.E.P. § 708.2
ELECTRODEPOSITION DISPLACEMENT	:	
REACTION	:	

This is a decision on the petition filed on March 28, 2008 to make the above-identified application special for accelerated examination procedure under 37 C.F.R. §1.102(d).

The petition to make the application special is GRANTED.

The application is eligible for accelerated examination and the petition complies with the conditions for granting the application special status pursuant to the "Change to Practice for Petitions in Patent Applications to Make Special and for Accelerated Examination" published June 26, 2006, in the Federal Register. (71 Fed. Reg. 36323).

The prosecution of the instant application will be conducted expeditiously according to the following guidelines.

1. The application will be docketed to an examiner and taken up for action within two weeks of the date of this decision.

2. Restriction Practice:
   If the examiner determines that the claims are not directed to a single invention, a telephone request to elect one single invention will be made pursuant to MPEP 812.01. As a prerequisite to the grant of this petition, the applicant has agreed to make an oral election, by telephone, without traverse. If the applicant refuses to make an election without traverse, or the examiner cannot reach the applicant after a reasonable effort, the examiner will treat the first claimed invention (invention defined by claim 1) as having being constructively elected without traverse for examination.

3. Office action:
   If it is determined that, after appropriate consultation, there is a potential rejection or any

other issue to be addressed, the examiner will telephone the applicant and arrange an interview to discuss and resolve the issue. An Office action, other than a Notice of Allowance and Fee(s) Due (Notice of Allowance), will not be issued unless either: 1) an interview was conducted but did not result in agreed to action that places the application in condition for allowance, or, 2) a determination is made that an interview would be unlikely to result in the application being placed in condition for allowance, and 3) an internal conference has been held to review any rejection of any claim.

4. Time for Reply:
An Office action other than a Notice of Allowance or a final Office action will set a shortened statutory period of one month or thirty days, whichever is longer, for reply with no extension of time available under 37 C.F.R. §1.136(a). Failure to timely file a reply within this non-extendible period for reply will result in the abandonment of the application.

5. Reply by Applicant:
A timely reply to an Office action other than the Notice of Allowance must be submitted electronically via EFS or EFS-web and limited to addressing the rejections, objections and requirement made. Any amendment that attempts to: 1) add claims which would result in more than three pending independent claims or more than twenty pending total claims; 2) present claims not encompassed by the pre-examination search or an updated accelerated examination support document; or 3) present claims that are directed a non-elected invention or an invention other than that previously claimed and examined in the application, will be treated as not fully responsive and will not be entered.

For any amendment to the claims (including any new claim) that is not encompassed by the accelerated examination support document, applicant must provide an updated accelerated examination support document that encompasses the amended or new claims at the time of filing of the amendment.

To proceed expeditiously with the examination, it is recommended that a reply with amendments made to any claim or with any new claim being added be accompanied by an updated accelerated examination support document or a statement explaining how the amended or new claim is supported by the original accelerated examination support document.

6. Information Disclosure Statement (IDS):
Any IDS filed during prosecution must be submitted electronically via EFS or EFS-web, accompanied by an updated accelerated examination support document, and be in compliance with 37 C.F.R. §1.97 and §1.98. mpliance with 37 C.F.R. §1.97 and §1.98.

7. Post-Allowance Processing:
To expedite processing of the allowed application into a patent, the applicant must: 1) pay the required fees within one month of the date of the Notice of Allowance, and 2) not

file any post allowance papers not required by the Office. In no event may the issue fee be paid and accepted later than three months from the date of the Notice of Allowance.

8. After-Final and Appeal Procedures:
   To expedite prosecution, after receiving the final Office action, applicant must: 1) promptly file a notice of appeal, an appeal brief and appeal fees; and 2) not request a pre-appeal brief conference.

   Any amendment, affidavit or other evidence filed after final Office action must comply with applicable rules and the requirements outlined in numbered paragraphs 5 and 6 above.

   On appeal, the application will proceed according to normal appeal procedures. After appeal, the application will again be treated special.

9. Proceedings Outside the Normal Examination Process:
   If the application becomes involved in a proceeding that is outside the normal examination process (e.g., a secrecy order, national security review, interference proceeding, petitions under 37 C.F.R. §1.181, §1.182 or §1.183), the application will be treated special before and after such proceeding.

10. Final Disposition:
    The twelve-month goal of this accelerated examination procedure ends with a final disposition. The mailing of a final Office action, a Notice of Allowance, the filing of a Notice of Appeal, or the filing of a Request for Continued Examination (RCE) is the final disposition.

If, during prosecution, a paper is not filed electronically using EFS-web, a reply is filed but is not fully responsive, the application is involved in an appeal, or a proceeding outside normal examination process, the application will still be examined expeditiously, however, the final disposition may occur more than twelve months from the filing of the application.

Any inquiry regarding this decision should be directed to the undersigned at (571) 272-1638.

Edward Westin

Edward Westin, Quality Assurance Specialist
Technology Center 2800
Semiconductors, Electrical and Optical
Systems and Components

UNITED STATES PATENT AND TRADEMARK OFFICE

UNITED STATES DEPARTMENT OF COMMERCE
United States Patent and Trademark Office
Address: COMMISSIONER FOR PATENTS
P.O. Box 1450
Alexandria, Virginia 22313-1450
www.uspto.gov

APPLICATION NO.	FILING DATE	FIRST NAMED INVENTOR	ATTORNEY DOCKET NO.	CONFIRMATION NO.
12/057,705	03/28/2008	Marta Blumenfeld	GEN-T114XCZD1	1826

EXAMINER

7590 05/04/2009
SALIWANCHIK LLOYD & SALIWANCHIK
A PROFESSIONAL ASSOCIATION
PO Box 142950
GAINESVILLE, FL 32614

ART UNIT	PAPER NUMBER
1645	

MAIL DATE	DELIVERY MODE
05/04/2009	PAPER

DECISION GRANTING PETITION UNDER 37 CFR 1.138(d)

The declaration of express abandonment is recognized

This is in response to the petition under 37 CFR 1.138(d), requesting for a refund of any previously paid search fee and excess claims fee in the above-identified application.

The petition is granted.

The express abandonment is recognized. Any previously paid search fee and excess claims fee are hereby refunded.

Telephone inquiries should be directed to the Office of Data Management at (571) 272-4200.

Nimi Farmer

Patent Publication Branch
Office of Data Management

Refund Ref:
05/05/2009 0030069702

Credit Card Refund Total: $560.00

An Exp..: XXXXXXXXXXX1003

Adjustment date: 05/05/2009 NFARMER
03/28/2008 INTEFSW 00008493 12057705
02 FC:1111 -510.00 OP
05 FC:1202 -50.00 OP

FORM PET651G (Rev. 08/07)

UNITED STATES PATENT AND TRADEMARK OFFICE

UNITED STATES DEPARTMENT OF COMMERCE
United States Patent and Trademark Office
Address: COMMISSIONER FOR PATENTS
P.O. Box 1450
Alexandria, Virginia 22313-1450
www.uspto.gov

APPLICATION NO.	FILING DATE	FIRST NAMED INVENTOR	ATTORNEY DOCKET NO.	CONFIRMATION NO.
12/057,737	03/28/2008	Aruna Yedavilli	AUS920071037US1	1888

78038 7590 05/21/2008
LEVEQUE INTELLECTUAL PROPERTY LAW, P.C.
221 E. CHURCH STREET
FREDERICK, MD 21701

EXAMINER
CALDWELL, ANDREW T

ART UNIT	PAPER NUMBER
2142	

MAIL DATE	DELIVERY MODE
05/21/2008	PAPER

Please find below and/or attached an Office communication concerning this application or proceeding.

The time period for reply, if any, is set in the attached communication.

UNITED STATES PATENT AND TRADEMARK OFFICE

Commissioner for Patents
United States Patent and Trademark Office
P.O. Box 1450
Alexandria, VA 22313-1450
www.uspto.gov

LEVEQUE INTELLECTUAL PROPERTY LAW, P.C.
221 E. CHURCH STREET
FREDERICK MD 21701

In re Application of: Aruna YEDAVILLI, et al. Serial No.: 12/057,737 Filed: Mar 28, 2008 Docket: AUS920071037US1 Title: INSTANT MESSAGE SESSION TRANSFERS	DECISION ON PETITION TO MAKE SPECIAL FOR NEW APPLICATION UNDER 37 C.F.R. § 1.102 & M.P.E.P. § 708.02

This is a decision on the petition filed on Mar 28, 2008 to make the above-identified application special for accelerated examination procedure under 37 C.F.R. § 1.102(d).

The petition to make the application special is **DISMISSED**.

REGULATION AND PRACTICE

A grantable petition to make special under 37 C.F.R. § 1.102(d) and pursuant to the "Change to Practice for Petitions in Patent Applications to Make Special and for Accelerated Examination" published in the Federal Register on June 26, 2006 (71 Fed. Reg. 36323), must satisfy the following conditions:

I. Conditions Regarding the Application:

1. the application must be a non-reissue utility or design application filed under 37 CFR 1.111(a);
2. the application, the petition and the required fees must be filed electronically using the USPTO's electronic filing system (EFS), or EFS-web; if not filed electronically, a statement asserting that EFS and EFS-web were not available during the normal business hours.
3. at the time of filing, the application must be complete under 37 CFR 1.51 and in condition for examination;
4. the application must contain three or fewer independent claims and twenty or fewer total claims and the claims must be directed to a single invention.

II. Conditions Regarding the Petition:

The petition must:

1. be filed with the application;

2. include a statement that applicant agrees not to separately argue the patentability of any independent claim during any appeal in the application;

3. include a statement that applicant agrees to make an election without traverse in a telephone interview.

4. include a statement that applicant agrees to conduct such an interview when requested by the examiner.

5. include a statement, made based on a good faith belief, that a preexamination search in compliance with the following requirements, was conducted, including an identification of the filed of search by United States class and subclass, where applicable, and for database searches, the search logic or chemical structure or sequence used as a query, the name of the file(s) searched and the database service, and the date of the search.

The preexamination search must:

5.1 involve U.S. patents and patent application publications, foreign patent documents, and non-patent literature, unless the applicant can justify with reasonable certainty that no references more pertinent than those already identified are likely to be found in the eliminated sources and includes such a justification with this statement;

5.2. be directed to the claimed invention and encompass all of the features of the claims, giving the claims the broadest reasonable interpretation;

5.3. encompass the disclosed features that may be claimed.

6. must provide in support of the petition an accelerated examination support document. An accelerated examination support document must include:

6.1. an information disclosure statement (IDS) in compliance with 37 CFR 1.98 citing each reference deemed most closely related to the subject matter of each of the claims;

6.2. an identification of all the limitations in the claims that are disclosed by the reference specifying where the limitation is disclosed in the cited reference;

6.3. a detailed explanation of how each of the claims is patentable over the references cited with particularity required by 37 CFR 1.111(b) and (c);

6.4. a concise statement of the utility of the invention as defined in each of the independent claims (unless the application is a design application);

6.5. a showing of where each limitation of the claims finds support under 35 USC 112, first paragraph, in the written description of the specification. If applicable, the showing must also identify: (1) each means- (or step) plus-function claim element that invokes consideration under 35 USC 112, sixth paragraph; and (2) the structure, material, or acts in the specification that corresponds to each means- (or step) plus-function claim element that invokes consideration under 35 USC 112, sixth paragraph; if the application claims the benefit of one or more applications under title 35, United States Code, the showing must also include where each limitation of the claims finds support under 35 USC 112, first paragraph, in each such application in which such supports exists;

6.6. an identification of any cited references that may be disqualified under 35 USC 103(c).

REVIEW OF FACTS

The conditions I.1 to II.4 above are considered to have been met. However, the petition fails to comply with conditions II.5 and II.6 above. Therefore, the petition fails to meet the required conditions to be accorded special status under the accelerated examination procedure.

Regarding item II.5.1 above, for classification searches, MPEP 719.05 states that a *classification search* is defined as a complete search of **all** the documents in a particular subclass, and it is not limited by any text query or other means. The petitioner indicates in the Classification Search that "All subclasses 370, 455, 709" along with "709/220, 227, 230, 232, 238". It is unclear if petitioner intends to indicate that all subclasses of classes 370, 455 and 709 along with the specified subclasses (220, 227, 230, 232, and 238) of class 709 were searched under the guidelines of MPEP 719.05. Furthermore, the petitioner is requested to clarify whether the text search logic used was utilized in combination with the identified field of search or separate therefrom (i.e. **the identified classes and subclasses were searched in their entirety**); and if they were combined, how the combination of searches were performed. Corrections/Clarification required.

Regarding the requirement of MPEP § 708.02(a)(I.)(H) and items II.5.2 and II5.3 above, the pre-examination search must involve U.S. patents and patent application publications, foreign patent documents, and non-patent literature and the pre-examination search must be directed to the (instant) claimed invention and encompass all of the features of the claims, giving the claim the broadest reasonable interpretation. The search logic does not seems to include the inventive concept or features included in the in the claim language that covers the subject matter of the claims using terms recognized in the art given their broadest reasonable interpretation.

The search should consider individual features by themselves and combinations of features. The search should cover the **broadest scope** encompassed by the claims **as well as** claims of **narrow and intermediate breadth**. It is noted that search logic does not include the relevant search terms for claimed features listed below; some of these features have been identified as key features in the Detailed Explanation of Patentability by applicant to distinguishing the instant claimed subject matter from the cited prior art references deemed most closely related to the claimed invention in the Examination Support Document:

1) if the instant message service supports simultaneous active instant message sessions for the user and there is a plurality of simultaneous active instant message sessions for the user, further:

determining a protocol for an instant message server of the instant message service to transfer session messages of the plurality of simultaneous active instant message sessions to the new instant message session;

the instant message server retrieving the session messages of the plurality of simultaneous active instant message sessions;

the instant message server transferring content and sender information of one or more of the session messages of the plurality of simultaneous active instant message sessions to the new instant message session of the user in accordance with the protocol;

2) if the instant message service does not support simultaneous active instant message sessions or if there are no simultaneous active instant messages sessions...,

if there is an active instant message session of the user, the instant message server retrieving a session message of the active instant message session and transferring content and sender information of the session message of the active instant message session to the new instant message session being established; and

disconnecting the active instant message session of the user in favor of the new instant message session.

It is noted that no search terms related to the concepts of *determining if the instant message service supports simultaneous active instant message sessions, determining a protocol, server retrieving the session messages and transferring content and sender information accordance with the protocol, and if service does not support disconnecting the active instant message session in favor of the new session* is found in the search logic. It is further noticed that the search logic uses only logical AND and OR operators. Such search logic does not appear to embrace the inventive concept or features of the claims and should be expanded to include relevant and related words coupled with search operators (i.e. WITH, SAME, NEARN, ADJN) to better cover the concept of the claimed features.

The Petitioner is advised to review the all claim limitations, especially those asserted as patentable distinctions from the cited references to ensure the preexamination search covers these concepts, and update the search and/or provide any clarification if deemed necessary.

Regarding the requirement of MPEP § 708.02(a)(I.)(I)(3) and item 6.3 above, the Accelerated Examination Support Document (AESD) requires a detailed explanation of how the claim is patentable with the **particularity** required by 37 CFR 1.111(b) and (c).

In section 9C) of the AESD, the petitioner identifies the limitations of claim 1 that are not taught by the sole reference of Moore indicated as most closely related and concludes that the claim is therefore patentably distinguished over "each of the references alone or in combination". As such, the petitioner fails clearly point out the

patentable novelty which he or she thinks the claims present in view of the state of the art disclosed by the references cited. Petitioner is requested to clearly point out claim limitations not taught by any of the references and limitations which patentably distinguish each claim over the references cited alone or in combination in view of the state of the art. Correction/clarification required.

Petitioner is also reminded to update sections 9 (B) and 9 (C) of the AESD with respect to any additional references resulted from the updated search with the particularity required by 37 CFR 1.111(b) and (c).

Regarding to the requirement of MPEP § 708.02(a)(I.)(I)(5) and item II.6.5 above, the Accelerated Examination Support Document identifies at least FIGs. 1-3, and paragraphs 9-14 of the instant specification as providing support for the sole claim 1. However, the requirement of MPEP § 708.02(a)(I.)(I)(5) and item II.6.5 above clearly states that the petitioner is required to **specifically identify what corresponding elements in the figures** and **specifically identify where the corresponding written description in the cited portions of the instant specification** can find support under 35 U.S.C. § 112, first paragraph **for each limitation of the claim 1**.

It is pointed out that the written description requirement has several policy objectives. The essential goal of the description of the invention requirement is to clearly convey the information that an applicant has invented the subject matter which is claimed. Another objective is to put the examiner in possession of what the applicant claims as the invention – the written description requirement implements the principle that a patent application must describe the technology that is sought to be patented; the requirement serves both to satisfy the inventor's obligation to disclose the technologic knowledge upon which the application is based and to demonstrate that the applicants were in possession of the invention that is claimed. Further, the written description requirement promotes the progress of expedite examination by ensuring that applicants adequately describe their inventions in sufficient detail in their applications in exchange for the right to take-up out of order of examination.

Thus, a general statement that all limitations of claim(s) can be found in all the figures of the application and their corresponding discussions cannot be accepted to satisfy such a requirement of MPEP § 708.02(a)(I.)(I)(5) and item II.6.5 above. Petitioner is required to identify each claim limitations and the corresponding support in the cited portions (**page, line, and corresponding element in the figures**) where the instant claim language finds corresponding support

DECISION

For the above-stated reasons, the petition is **DISMISSED**. The application will therefore be taken up by the examiner for action in its regular turn.

Petitioner is given a single opportunity to perfect the petition. Any request for reconsideration of this decision must be submitted within 1 (one) month or 30 (thirty) days, whichever is longer, (no extension of time under 37 CFR 1.136(a)) from the date of this decision in order to be considered timely. Any request for reconsideration must address the deficiencies indicated above.

Petitioner is reminded that, upon granting of the special status of the application on request for reconsideration, the application will be processed expeditiously. However, due to the dismissal of the instant petition, examination may not be completed within twelve months of the filing date of the application.

Any inquiry regarding this decision should be directed the undersigned whose telephone number is (571) 272-4147.

If attempts to reach the undersigned by telephone are unsuccessful, Tod Swann, Quality Assurance Specialist, can be reached at (571) 272-3612.

Kim Huynh,
Quality Assurance Specialist
Technology Center 2100
Computer Architecture, Software and Information Security

UNITED STATES PATENT AND TRADEMARK OFFICE

UNITED STATES DEPARTMENT OF COMMERCE
United States Patent and Trademark Office
Address: COMMISSIONER FOR PATENTS
P.O. Box 1450
Alexandria, Virginia 22313-1450
www.uspto.gov

APPLICATION NO.	FILING DATE	FIRST NAMED INVENTOR	ATTORNEY DOCKET NO.	CONFIRMATION NO.
12/057,737	03/28/2008	Aruna Yedavilli	AUS920071037US1	1888

78038 7590 09/29/2008
LEVEQUE INTELLECTUAL PROPERTY LAW, P.C.
221 E. CHURCH STREET
FREDERICK, MD 21701

EXAMINER
CALDWELL, ANDREW T

ART UNIT	PAPER NUMBER
2142	

MAIL DATE	DELIVERY MODE
09/29/2008	PAPER

Please find below and/or attached an Office communication concerning this application or proceeding.

The time period for reply, if any, is set in the attached communication.

UNITED STATES PATENT AND TRADEMARK OFFICE

Commissioner for Patents
United States Patent and Trademark Office
P.O. Box 1450
Alexandria, VA 22313-1450
www.uspto.gov

LEVEQUE INTELLECTUAL PROPERTY LAW, P.C.
221 E. CHURCH STREET
FREDERICK MD 21701

In re Application of: Aruna YEDAVILLI, et al. Serial No.: 12/057,737 Filed: Mar 28, 2008 Docket: AUS920071037US1 Title: INSTANT MESSAGE SESSION TRANSFERS	DECISION ON PETITION TO MAKE SPECIAL FOR NEW APPLICATION UNDER 37 C.F.R. § 1.102 & M.P.E.P. § 708.02

This is a decision on the renewed petition filed on June 20, 2008 (and supplemental filed 9/25/08) to make the above-identified application special for accelerated examination procedure under 37 C.F.R. § 1.102(d). The original petition, submitted on Mar 24, 2008 was dismissed in the decision mailed on May 21, 2008.

The renewed petition adequately addresses all the concerns raised in the dismissal; it not noted that no additional references submitted as the resulted of the updated search. The petition to make the application special is **GRANTED**.

The application is eligible for accelerated examination and the petition complies with the conditions for granting the application special status pursuant to the "Change to Practice for Petitions in Patent Applications to Make Special and for Accelerated Examination" published June 26, 2006, in the Federal Register. (71 Fed. Reg. 36323).

The prosecution of the instant application will be conducted expeditiously according to the following guidelines.

1. The application will be docketed to an examiner and taken up for action within two weeks of the date of this decision.

2. Restriction Practice:
   If the examiner determines that the claims are not directed to a single invention, a telephone request to elect one single invention will be made pursuant to MPEP 812.01. As a prerequisite to the grant of this petition, the applicant has agreed to make an oral election, by telephone, without traverse. If the applicant refuses to make an election without traverse, or the examiner cannot reach the applicant after a reasonable effort, the examiner will treat the first claimed invention

(invention defined by claim 1) as having being constructively elected without traverse for examination.

3. Office action:
If it is determined that, after appropriate consultation, there is a potential rejection or any other issue to be addressed, the examiner will telephone the applicant and arrange an interview to discuss and resolve the issue. An Office action, other than a Notice of Allowance and Fee(s) Due (Notice of Allowance), will not be issued unless either: 1) an interview was conducted but did not result in agreed to action that places the application in condition for allowance, or, 2) a determination is made that an interview would be unlikely to result in the application being placed in condition for allowance, and 3) an internal conference has been held to review any rejection of any claim.

4. Time for Reply:
An Office action other than a Notice of Allowance or a final Office action will set a shortened statutory period of one month or thirty days, whichever is longer, for reply with no extension of time available under 37 CFR 1.136(a). Failure to timely file a reply within this non-extendible period for reply will result in the abandonment of the application.

5. Reply by Applicant:
A timely reply to an Office action other than the Notice of Allowance must be submitted electronically via EFS or EFS-web and limited to addressing the rejections, objections and requirement made. Any amendment that attempts to: 1) add claims which would result in more than three pending independent claims or more than twenty pending total claims; 2) present claims not encompassed by the pre-examination search or an updated accelerated examination support document; or 3) present claims that are directed a non-elected invention or an invention other than that previously claimed and examined in the application, will be treated as not fully responsive and will not be entered.

For any amendment to the claims (including any new claim) that is not encompassed by the accelerated examination support document, applicant must provide an updated accelerated examination support document that encompasses the amended or new claims at the time of filing of the amendment.

To proceed expeditiously with the examination, it is recommended that a reply with amendments made to any claim or with any new claim being added be accompanied by an updated accelerated examination support document or a statement explaining how the amended or new claim is supported by the original accelerated examination support document.

6. Information Disclosure Statement (IDS):

Any IDS filed during prosecution must be submitted electronically via EFS or EFS-web, accompanied by an updated accelerated examination support document, and be in compliance with 37 CFR 1.97 and 1.98.

7. Post-Allowance Processing:
   To expedite processing of the allowed application into a patent, the applicant must: 1) pay the required fees within one month of the date of the Notice of Allowance, and 2) not file any post allowance papers not required by the Office. In no event may the issue fee be paid and accepted later than three months from the date of the Notice of Allowance.

8. After-Final and Appeal Procedures:
   To expedite prosecution, after receiving the final Office action, applicant must: 1) promptly file a notice of appeal, an appeal brief and appeal fees; and 2) not request a pre-appeal brief conference.

   Any amendment, affidavit or other evidence filed after final Office action must comply with applicable rules and the requirements outlined in numbered paragraphs 5 and 6 above.

   On appeal, the application will proceed according to normal appeal procedures. After appeal, the application will again be treated special.

9. Proceedings Outside the Normal Examination Process:
   If the application becomes involved in a proceeding that is outside the normal examination process (e.g., a secrecy order, national security review, interference proceeding, petitions under 37 CFR 1.181, 182 or 183), the application will be treated special before and after such proceeding.

10. Final Disposition:
    The twelve-month goal of this accelerated examination procedure ends with a final disposition. The mailing of a final Office action, a Notice of Allowance, the filing of a Notice of Appeal, or the filing of a Request for Continued Examination (RCE) is the final disposition.

If, during prosecution, a paper is not filed electronically using EFS-web, a reply is filed but is not fully responsive, the application is involved in an appeal, or a proceeding outside normal examination process, the application will still be examined expeditiously, however, the final disposition may occur more than twelve months from the filing of the application. In addition, Applicant is reminded that due to the dismissal of the previous petition submission, examination may not be completed within twelve months of the filing date of the application.

Any inquiry regarding this decision should be directed the undersigned whose telephone number is (571) 272-4147.

If attempts to reach the undersigned by telephone are unsuccessful, Tod Swann, Quality Assurance Specialist, can be reached at (571) 272-3612.

/Kim Huynh/

Kim Huynh,
Quality Assurance Specialist
Technology Center 2100
Computer Architecture, Software and Information Security

UNITED STATES PATENT AND TRADEMARK OFFICE

Commissioner for Patents
United States Patent and Trademark Office
P.O. Box 1450
Alexandria, VA 22313-1450
www.uspto.gov

SAWYER LAW GROUP LLP
2465 E. BAYSHORE ROAD, SUITE 406
PALO ALTO, CA 94303

COPY MAILED

APR 27 2009

OFFICE OF PETITIONS

In re Application of
Andrew P. PERR, et al.
Application No. 12/057,772
Filed: March 28, 2008
Attorney Docket No. **8-02-12909/4223P**

DECISION ON PETITION TO WITHDRAW FROM RECORD

This is a decision on the Request to Withdraw as attorney or agent of record under 37 C.F.R. § 1.36(b), filed January 23, 2009.

The request is **APPROVED**.

A grantable request to withdraw as attorney/agent of record must be signed by every attorney/agent seeking to withdraw or contain a clear indication that one attorney is signing on behalf of another/others.

The request was signed by Joseph A. Sawyer, Jr. on behalf of all attorneys of record. All attorneys/agents have been withdrawn. Applicant is reminded that there is no attorney of record at this time.

All future communications from the Office will be directed to the assignee of the entire interest CUMMINS INC., at the address below until otherwise properly notified by the applicant.

Telephone inquiries concerning this decision should be directed to the undersigned at 571-272-7253.

/Monica A. Graves/
Petitions Examiner, Office of Petitions

cc: **CUMMINS, INC.**
ATTN: INTELLECTUAL PROPERY GROUP
500 JACKSON STREET
COLUMBUS, IN 47201

UNITED STATES PATENT AND TRADEMARK OFFICE

Commissioner for Patents
United States Patent and Trademark Office
P.O. Box 1450
Alexandria, VA 22313-1450
www.uspto.gov

JAN 0 4 2010

OBLON, SPIVAK, MCCLELLAND MAIER &
NEUSTADT, L.L.P.
1940 DUKE STREET
ALEXANDRIA, VA 22314

In re application of Masakuni Suzuki et al. Application No. 12/057,821 Filed: March 28, 2008 For: HYDRAULIC BRAKE SYSTEM	: DECISION ON REQUEST TO : PARTICIPATE IN PATENT : PROSECUTION HIGHWAY : PROGRAM AND PETITION : TO MAKE SPECIAL UNDER : 37 CFR 1.102(d)

This is a decision on the request to participate in the Patent Prosecution Highway (PPH) program and the petition under 37 CFR 1.102(d), filed December 22, 2009, to make the above-identified application special.

The request and petition are **GRANTED**.

A grantable request to participate in the PPH pilot program and petition to make special require:

(1) The U.S. application must validly claim priority under 35 U.S.C. 119(a) to one or more applications filed in the JPO;
(2) Applicant must submit a copy of the allowable/patentable claim(s) from the JPO application(s) along with an English translation thereof and a statement that the English translation is accurate;
(3) All the claims in the U.S. application must sufficiently correspond or be amended to sufficiently correspond to the allowable/patentable claim(s) in the JPO application(s);
(4) Examination of the U.S. application has not begun;
(5) Applicant must submit a copy of the Office action from the JPO application just prior to the "Decision to Grant a Patent" (e.g., the latest "Notification of Reasons for Refusal") from each of the JPO application(s) containing the allowable/patentable claims that are the basis for the request along with an English translation thereof and a statement that the English translation is accurate;
(6) Applicant must submit an IDS listing the documents cited by the JPO examiner in the JPO Office action along with copies of documents except U.S. patents or U.S. patent application publications; and
(7) The required petition fee under 37 CFR 1.17(h).

The request to participate in the PPH program complies with the above requirements. Therefore, the above-identified application has been accorded "special" status.

Telephone inquires concerning this decision should be directed to Teri P. Luu at 571-272-7045. All other inquiries concerning the examination or status of the application should be directed to the Patent Application Information Retrieval (PAIR) system.

The application is being forwarded to the examiner for action on the merits commensurate with this decision.

/Teri P. Luu/

Teri P. Luu
Quality Assurance Specialist
Technology Center 3600

tpl: 12/23/09

UNITED STATES PATENT AND TRADEMARK OFFICE

Commissioner for Patents
United States Patent and Trademark Office
P.O. Box 1450
Alexandria, VA 22313-1450
www.uspto.gov

ROSSI, KIMMS & McDOWELL LLP.
20609 Gordon Park Square, Suite 150
Ashburn VA 20147

MAIL

JUL 16 2010

DIRECTOR'S OFFICE
TECHNOLOGY CENTER 2600

In re Application of	:	
MATSUEDA, KAZUTAKA	:	DECISION ON REQUEST TO
Application No. 12/057,858	:	PARTICIPATE IN PATENT
Filed: March 28, 2008	:	PROSECUTION HIGHWAY
Attorney Docket No. CANO-0688	:	PROGRAM AND PETITION
	:	TO MAKE SPECIAL UNDER
	:	37 CFR 1.102(d)

This is a decision on the request to participate in the Patent Prosecution Highway (PPH) program and the petition under 37 CFR 1.102(d), filed May 27, 2010, to make the above-identified application special.

The request and petition are **DISMISSED**.

A grantable request to participate in the PPH program and petition to make special require:

(1) The U.S. application must validly claim priority under 35 U.S.C. 119(a) to one or more applications filed in the JPO;
(2) Applicant must submit a copy of the allowable/patentable claim(s) from the JPO application(s) along with an English translation thereof and a statement that the English translation is accurate;
(3) All the claims in the U.S. application must sufficiently correspond or be amended to sufficiently correspond to the allowable/patentable claim(s) in the JPO application(s);
(4) Examination of the U.S. application has not begun;
(5) Applicant must submit a copy of all the office actions from each of the JPO application(s) containing the allowable/patentable claim(s) along with an English translation thereof and a statement that the English translation is accurate;
(6) Applicant must submit an IDS listing the documents cited by the JPO examiner in the JPO office action along with copies of documents except U.S. patents or U.S. patent application publications; and

The request to participate in the PPH program and petition is deficient as follows:

Petitioner has not complied with item 2 above in that although a translation of the claims has been submitted, the petition fails to include a copy of the actual allowable/patentable claims from the JPO application. It is noted that a copy of the Japanese patent 4372175 appears to have been submitted to show a copy of the actual allowable/patentable claims. However, upon review of the patent scanned into IFW, only pages 1 and 11-15 appear to be legible. From these pages it cannot be confirmed that a copy of all of the actual allowable/patentable claims have been filed. Therefore, a legible copy of all the actual allowable/patentable claims is required.

Applicant is given a time period of **ONE MONTH or THIRTY DAYS**, whichever is longer, from the mailing date of this decision to correct the deficiencies. **NO EXTENSION OF TIME UNDER 37 CFR 1.136 IS PERMITTED.** If the deficiencies are not corrected with the time period given, the application will await action in its regular turn.

Any response must be submitted via EFS-web.

Telephone inquiries concerning this decision should be directed to Michael Horabik at 571-272-3068.

Pursuant to the "Notice regarding the Elimination of the Fee for Petitions To Make Special Filed Under the Patent Prosecution Highway (PPH) Programs" published in the Federal Register on May 25, 2010 (75 Fed. Reg. 29312), the fee under 37 CFR 1.17(h) for the petition to make special under the Patent Prosecution Highway (PPH) programs has been eliminated. The application is being forwarded to the TC Tech Support staff to process a refund of $130.00.

All other inquiries concerning the examination or status of the application should be directed to Patent Application Information Retrieval (PAIR) system.

/Michael Horabik/

Michael Horabik
Quality Assurance Specialist
Technology Center 2600
Communications

UNITED STATES PATENT AND TRADEMARK OFFICE

UNITED STATES DEPARTMENT OF COMMERCE
United States Patent and Trademark Office
Address: COMMISSIONER FOR PATENTS
P.O. Box 1450
Alexandria, Virginia 22313-1450
www.uspto.gov

APPLICATION NO.	FILING DATE	FIRST NAMED INVENTOR	ATTORNEY DOCKET NO.	CONFIRMATION NO.
12/057,868	03/28/2008	Johnny M. Shieh	AUS920071005US1 / 9659	2099

75780 7590 08/04/2008
PATENTEC
2001 JEFFERSON DAVIS HWY #301
ARLINGTON, VA 22202

EXAMINER
HONG, STEPHEN S

ART UNIT	PAPER NUMBER
2178	

MAIL DATE	DELIVERY MODE
08/04/2008	PAPER

Please find below and/or attached an Office communication concerning this application or proceeding.

The time period for reply, if any, is set in the attached communication.

UNITED STATES PATENT AND TRADEMARK OFFICE

Commissioner for Patents
United States Patent and Trademark Office
P.O. Box 1450
Alexandria, VA 22313-1450
www.uspto.gov

PATENTEC
2001 JEFFERSON DAVIS HWY #301
ARLINGTON VA 22202

In re Application of: Johnny M. Shieh, et al. Serial No.: 12/057,868 Filed: March 28, 2008 Docket: AUS920071005US1 / 9659 Title: METHOD TO DISPLAY MULTIPLE CACHED WEBPAGES RELATED TO A BOOKMARK	DECISION ON PETITION TO MAKE SPECIAL FOR NEW APPLICATION UNDER 37 C.F.R. § 1.102 & M.P.E.P. § 708.02

This is a decision on the petition filed on March 28, 2008 to make the above-identified application special for accelerated examination procedure under 37 C.F.R. § 1.102(d).

The petition to make the application special is **DISMISSED**.

REGULATION AND PRACTICE

A grantable petition to make special under 37 C.F.R. § 1.102(d) and pursuant to the "Change to Practice for Petitions in Patent Applications to Make Special and for Accelerated Examination" published in the Federal Register on June 26, 2006 (71 Fed. Reg. 36323), must satisfy the following conditions:

I. Conditions Regarding the Application:

1. the application must be a non-reissue utility or design application filed under 37 CFR 1.111(a);
2. the application, the petition and the required fees must be filed electronically using the USPTO's electronic filing system (EFS), or EFS-web; if not filed electronically, a statement asserting that EFS and EFS-web were not available during the normal business hours.
3. at the time of filing, the application must be complete under 37 CFR 1.51 and in condition for examination;
4. the application must contain three or fewer independent claims and twenty or fewer total claims and the claims must be directed to a single invention.

II. Conditions Regarding the Petition:

The petition must:

1. be filed with the application;
2. include a statement that applicant agrees not to separately argue the patentability of any dependent claim during any appeal in the application;

3. include a statement that applicant agrees to make an election without traverse in a telephone interview.

4. include a statement that applicant agrees to conduct such an interview when requested by the examiner.

5. include a statement, made based on a good faith belief, that a preexamination search in compliance with the following requirements, was conducted, including an identification of the field of search by United States class and subclass, where applicable, and for database searches, the search logic or chemical structure or sequence used as a query, the name of the file(s) searched and the database service, and the date of the search.

The preexamination search must:

5.1 involve U.S. patents and patent application publications, foreign patent documents, and non-patent literature, unless the applicant can justify with reasonable certainty that no references more pertinent than those already identified are likely to be found in the eliminated sources and includes such a justification with this statement;

5.2. be directed to the claimed invention and encompass all of the features of the claims, giving the claims the broadest reasonable interpretation;

5.3. encompass the disclosed features that may be claimed.

6. must provide in support of the petition an accelerated examination support document. An accelerated examination support document must include:

6.1. an information disclosure statement (IDS) in compliance with 37 CFR 1.98 citing each reference deemed most closely related to the subject matter of each of the claims;

6.2. an identification of all the limitations in the claims that are disclosed by the reference specifying where the limitation is disclosed in the cited reference;

6.3. a detailed explanation of how each of the claims is patentable over the references cited with particularity required by 37 CFR 1.111(b) and (c);

6.4. a concise statement of the utility of the invention as defined in each of the independent claims (unless the application is a design application);

6.5. a showing of where each limitation of the claims finds support under 35 USC 112, first paragraph, in the written description of the specification. If applicable, the showing must also identify: (1) each means- (or step) plus-function claim element that invokes consideration under 35 USC 112, sixth paragraph; and (2) the structure, material, or acts in the specification that corresponds to each means- (or step) plus-function claim element that invokes consideration under 35 USC 112, sixth paragraph; if the application claims the benefit of one or more applications under title 35, United States Code, the showing must also include where each limitation of the claims finds support under 35 USC 112, first paragraph, in each such application in which such supports exists;

6.6. an identification of any cited references that may be disqualified under 35 USC 103(c).

REVIEW OF FACTS

The conditions I.1 – I.4, II.5.3, II.6.3, II.6.4, II.6.5, and II.6.6 above are considered to have been met. However, the petition fails to comply with conditions II.5.1, II.5.2, II.6.1, and II.6.2 above. Therefore, the petition fails to meet the required conditions to be accorded special status under the accelerated examination procedure.

Regarding item **II.5.1** above, the Pre-Examination Search Document does not appear to indicate any of the foreign patent documents were searched as required, nor was any justification provided regarding a reasonable certainty that no references more pertinent than those already identified are likely to be found.

Regarding the requirement of MPEP § 708.02(a)(I.)(H)[1] and item II.5.2 above, the preexamination search must be directed to the claimed invention and encompass all of the features of the claims, giving the claims the broadest reasonable interpretation.

With respect to item **II.5.2** above, several of the claim limitations asserted as patentable features distinguishing the claimed invention from the cited prior art do not appear to have been included in any of the searches. For example, none of the limitations of "displaying a **numeral** alongside said bookmark...; ... displaying a **number count menu** including at least one **cache-count number** indicating the number of **desired cached webpages** that are to be displayed within the browser window;..." (emphasis added) nor any similar or equivalent search terms (by using "OR" between the terms) have been searched. Thus, the search does not appear to be proper by not encompassing all the features of the claim, giving the claim broadest reasonable interpretation, as required above.

Regarding item **II.6.1** above, the information disclosure statement (IDS) submitted cites many more references than that is listed on the Accelerated Examination Support Document (AESD) as references deemed most closely related to the claimed subject matter. Petitioner is required to include a discussion of all documents listed on the IDS but not discussed in the Support Document, or if the documents omitted from the Support Documents are deemed not required in the Support Document, submit these documents in a separate IDS in compliance with 37 CFR 1.97 and 1.98. Applicant should clearly identify the IDS of the AESD that is in support of the petition to make special and, similarly, Applicant should clearly identify the separate IDS that is not in support of the petition. It is noted that any reference submitted in a separate IDS that is not part of an IDS will be treated as representation by applicant to the USPTO that no reference submitted in the separate IDS is deemed closer to the subject matter of at least one claim than the references provided in the IDS of the AESD. Correction is required.

Regarding item **II.6.2** above, the AESD does not clearly identify the **limitations in the claim** that are disclosed and **where the limitations are disclosed** in each of the cited reference as required. Correction is required.

DECISION

For the above-stated reasons, the petition is **dismissed**. The application will therefore be taken up by the examiner for action in its regular turn.

---

[1] MPEP 8th ed. rev 5 August 2006

Petitioner is given a single opportunity to perfect the petition. Any request for reconsideration of this decision must be submitted within 1 (one) month or 30 (thirty) days, whichever is longer, (no extension of time under 37 CFR 1.136(a)) from the date of this decision in order to be considered timely. Any request for reconsideration must address the deficiencies indicated above.

Petitioner is reminded that, upon granting of the special status of the application on request for reconsideration, the application will be processed expeditiously. However, due to the dismissal of the instant petition, examination may not be completed within twelve months of the filing date of the application.

Any inquiry regarding this decision should be directed to the undersigned at (571) 272-3719. If attempts to reach the undersigned are unsuccessful, Mano Padmanabhan, Quality Assurance Specialist, Technology Center 2100 can be reached at (571)272-4210.

/Kakali Chaki/

Kakali Chaki, Quality Assurance Specialist
TC2100

UNITED STATES PATENT AND TRADEMARK OFFICE

UNITED STATES DEPARTMENT OF COMMERCE
United States Patent and Trademark Office
Address: COMMISSIONER FOR PATENTS
P.O. Box 1450
Alexandria, Virginia 22313-1450
www.uspto.gov

APPLICATION NO.	FILING DATE	FIRST NAMED INVENTOR	ATTORNEY DOCKET NO.	CONFIRMATION NO.
12/057,868	03/28/2008	Johnny M. Shieh	AUS920071005US1 / 9659	2099

75780 7590 12/15/2008
PATENTEC
2001 JEFFERSON DAVIS HWY #301
ARLINGTON, VA 22202

EXAMINER
HONG, STEPHEN S

ART UNIT	PAPER NUMBER
2178	

MAIL DATE	DELIVERY MODE
12/15/2008	PAPER

Please find below and/or attached an Office communication concerning this application or proceeding.

The time period for reply, if any, is set in the attached communication.

UNITED STATES PATENT AND TRADEMARK OFFICE

Commissioner for Patents
United States Patent and Trademark Office
P.O. Box 1450
Alexandria, VA 22313-1450
www.uspto.gov

PATENTEC
2001 JEFFERSON DAVIS HWY #301
ARLINGTON VA 22202

In re Application of: Johnny M. Shieh, et al. Serial No.: 12/057,868 Filed: March 28, 2008 Docket: AUS920071005US1 / 9659 Title: METHOD TO DISPLAY MULTIPLE CACHED WEBPAGES RELATED TO A BOOKMARK	DECISION ON PETITION TO MAKE SPECIAL FOR NEW APPLICATION UNDER 37 C.F.R. § 1.102 & M.P.E.P. § 708.02

This is a decision on the renewed petition filed on September 5, 2008 to make the above-identified application special for accelerated examination procedure under 37 C.F.R. § 1.102(d). The original petition, filed on March 28, 2008 was dismissed on August 4, 2008.

The petition to make the application special is GRANTED.

The application is eligible for accelerated examination and the petition complies with the conditions for granting the application special status pursuant to the "Change to Practice for Petitions in Patent Applications to Make Special and for Accelerated Examination" published June 26, 2006, in the Federal Register. (71 Fed. Reg. 36323).

The prosecution of the instant application will be conducted expeditiously according to the following guidelines.

1. The application will be docketed to an examiner and taken up for action within two weeks of the date of this decision.

2. Restriction Practice:
   If the examiner determines that the claims are not directed to a single invention, a telephone request to elect one single invention will be made pursuant to MPEP 812.01. As a prerequisite to the grant of this petition, the applicant has agreed to make an oral election, by telephone, without traverse. If the applicant refuses to make an election without traverse, or the examiner cannot reach the applicant after a reasonable effort, the examiner will treat the first claimed invention (invention defined by claim 1) as having being constructively elected without traverse for examination.

3. Office action:
   If it is determined that, after appropriate consultation, there is a potential rejection or any other issue to be addressed, the examiner will telephone the applicant and arrange an

interview to discuss and resolve the issue. An Office action, other than a Notice of Allowance and Fee(s) Due (Notice of Allowance), will not be issued unless either: 1) an interview was conducted but did not result in agreed to action that places the application in condition for allowance, or, 2) a determination is made that an interview would be unlikely to result in the application being placed in condition for allowance, and 3) an internal conference has been held to review any rejection of any claim.

4. Time for Reply:
An Office action other than a Notice of Allowance or a final Office action will set a shortened statutory period of one month or thirty days, whichever is longer, for reply with no extension of time available under 37 CFR 1.136(a). Failure to timely file a reply within this non-extendible period for reply will result in the abandonment of the application.

5. Reply by Applicant:
A timely reply to an Office action other than the Notice of Allowance must be submitted electronically via EFS or EFS-web and limited to addressing the rejections, objections and requirement made. Any amendment that attempts to: 1) add claims which would result in more than three pending independent claims or more than twenty pending total claims; 2) present claims not encompassed by the pre-examination search or an updated accelerated examination support document; or 3) present claims that are directed a non-elected invention or an invention other than that previously claimed and examined in the application, will be treated as not fully responsive and will not be entered.

   For any amendment to the claims (including any new claim) that is not encompassed by the accelerated examination support document, applicant must provide an updated accelerated examination support document that encompasses the amended or new claims at the time of filing of the amendment.

   To proceed expeditiously with the examination, it is recommended that a reply with amendments made to any claim or with any new claim being added be accompanied by an updated accelerated examination support document or a statement explaining how the amended or new claim is supported by the original accelerated examination support document.

6. Information Disclosure Statement (IDS):
Any IDS filed during prosecution must be submitted electronically via EFS or EFS-web, accompanied by an updated accelerated examination support document, and be in compliance with 37 CFR 1.97 and 1.98.

7. Post-Allowance Processing:
To expedite processing of the allowed application into a patent, the applicant must: 1) pay the required fees within one month of the date of the Notice of Allowance, and 2) not file any post allowance papers not required by the Office. In no event may the issue fee be paid and accepted later than three months from the date of the Notice of Allowance.

8. After-Final and Appeal Procedures:
   To expedite prosecution, after receiving the final Office action, applicant must: 1) promptly file a notice of appeal, an appeal brief and appeal fees; and 2) not request a pre-appeal brief conference.

   Any amendment, affidavit or other evidence filed after final Office action must comply with applicable rules and the requirements outlined in numbered paragraphs 5 and 6 above.

   On appeal, the application will proceed according to normal appeal procedures. After appeal, the application will again be treated special.

9. Proceedings Outside the Normal Examination Process:
   If the application becomes involved in a proceeding that is outside the normal examination process (e.g., a secrecy order, national security review, interference proceeding, petitions under 37 CFR 1.181, 182 or 183), the application will be treated special before and after such proceeding.

10. Final Disposition:
    The twelve month goal of this accelerated examination procedure ends with a final disposition. The mailing of a final Office action, a Notice of Allowance, the filing of a Notice of Appeal, or the filing of a Request for Continued Examination (RCE) is the final disposition.

If, during prosecution, a paper is not filed electronically using EFS-web, a reply is filed but is not fully responsive, the application is involved in an appeal, or a proceeding outside normal examination process, the application will still be examined expeditiously, however, the final disposition may occur more than twelve months from the filing of the application.

Any inquiry regarding this decision should be directed to Kakali Chaki, Quality Assurance Specialist, at (571) 272-3719.

/Kakali Chaki/

Kakali Chaki, Quality Assurance Specialist
Technology Center 2100

UNITED STATES PATENT AND TRADEMARK OFFICE

UNITED STATES DEPARTMENT OF COMMERCE
United States Patent and Trademark Office
Address: COMMISSIONER FOR PATENTS
P.O. Box 1450
Alexandria, Virginia 22313-1450
www.uspto.gov

APPLICATION NO.	FILING DATE	FIRST NAMED INVENTOR	ATTORNEY DOCKET NO.	CONFIRMATION NO.
12/057,939	03/28/2008	William H. Eby	1421-330	2224

32905 7590 08/28/2009
JONDLE & ASSOCIATES P.C.
858 HAPPY CANYON ROAD SUITE 230
CASTLE ROCK, CO 80108

EXAMINER
KUBELIK, ANNE R

ART UNIT	PAPER NUMBER
1638	

MAIL DATE	DELIVERY MODE
08/28/2009	PAPER

Please find below and/or attached an Office communication concerning this application or proceeding.

The time period for reply, if any, is set in the attached communication.

UNITED STATES PATENT AND TRADEMARK OFFICE

Commissioner for Patents
United States Patent and Trademark Office
P.O. Box 1450
Alexandria, VA 22313-1450
www.uspto.gov

AUG 2 8 2009

JONDLE & ASSOCIATES P.C.
858 HAPPY CANYON ROAD SUITE 230
CASTLE ROCK CO 80108

In re Application of:	:
William H. Eby	:
Serial No.: 12/057,939	: PETITION DECISION
Filed: March 28, 2008	:
Attorney Docket No.: **1421-330**	

This is in response to the petition under 37 CFR § 1.59(b), filed August 20, 2009, to expunge information from the above identified application. This application has not been allowed.

Petitioner requests that the Reply to Request for Information under 37 CFR 1.105, and attachment thereto, submitted to the Patent Office on August 20, 2009, be expunged from the record. Petitioner states either: (A) that the information contains trade secret material, proprietary material and/or material that is subject to a protective order which has not been made public; or (B) that the information submitted was unintentionally submitted and the failure to obtain its return would cause irreparable harm to the party who submitted the information or to the party in interest on whose behalf the information was submitted, and the information has not otherwise been made public. The petition fee set forth in 37 CFR § 1.17(g) has been paid.

This is an examined application which is currently under non-final rejection. As such the information provided has been reviewed, in part, but proceedings in the application have not been terminated. As stated in M.P.E.P. 724, upon allowance or other action closing prosecution in an application, petition may be made for return of Proprietary information. The information cannot be expunged at this time.

The petition is **DISMISSED**. Petitioner may resubmit the petition subsequent to a Notice of Allowability or *ex parte Quayle* action being mailed in the application. No additional petition fee will be required at that time.

Should there be any questions about this decision please contact Marianne C. Seidel by letter addressed to Director, TC 1600, at the address listed above, or by telephone at 571-272-0584 or by facsimile sent to the general Office facsimile number, 703-872-9306.

Marianne C. Seidel
Quality Assurance Specialist
Technology Center 1600

UNITED STATES PATENT AND TRADEMARK OFFICE

UNITED STATES DEPARTMENT OF COMMERCE
United States Patent and Trademark Office
Address: COMMISSIONER FOR PATENTS
P.O. Box 1450
Alexandria, Virginia 22313-1450
www.uspto.gov

APPLICATION NO.	FILING DATE	FIRST NAMED INVENTOR	ATTORNEY DOCKET NO.	CONFIRMATION NO.
12/057,953	03/28/2008	Norio Yoshie	YKI-0002	2248

7590 03/06/2009

MILLS & ONELLO LLP
ELEVEN BEACON STREET
SUITE 605
BOSTON, MA 02108

EXAMINER
PHAN, THO GIA

ART UNIT	PAPER NUMBER
2821	

MAIL DATE	DELIVERY MODE
03/06/2009	PAPER

DECISION GRANTING PETITION UNDER 37 CFR 1.138(d)

The declaration of express abandonment is recognized

This is in response to the petition under 37 CFR 1.138(d), requesting for a refund of any previously paid search fee and excess claims fee in the above-identified application.

The petition is granted.

The express abandonment is recognized. Any previously paid search fee and excess claims fee are hereby refunded.

Telephone inquiries should be directed to the Office of Data Management at (571) 272-4200.

Patent Publication Branch
Office of Data Management

Adjustment date: 03/06/2009 BPOWELL
03/31/2008 INTEFSW 00000001 12057953
02 FC:1111 -510.00 OP

Adjustment date: 03/06/2009 BPOWELL
03/31/2008 INTEFSW 00000001 12057953
02 FC:1111 -510.00 OP

FORM PET651G (Rev. 08/07)

Refund Ref:
03/06/2009 0030067405

Credit Card Refund Total: $510.00

Am Exp..: XXXXXXXXXXX1008

UNITED STATES PATENT AND TRADEMARK OFFICE

Commissioner for Patents
United States Patent and Trademark Office
P.O. Box 1450
Alexandria, VA 22313-1450
www.uspto.gov

SCULLY SCOTT MURPHY & PRESSER, PC
400 GARDEN CITY PLAZA
SUITE 300
GARDEN CITY NY 11530

COPY MAILED

JAN 2 1 2009

In re Application of	:	
Mikkaichi et al.	:	
Application No. 12/057,971	:	DECISION ON PETITION
Filed: March 28, 2008	:	
Attorney Docket No. 22621	:	

This is a decision on the petition under the unintentional provisions of 37 CFR 1.137(b), filed January 6, 2009, to revive the above-identified application.

The petition is **GRANTED**.

The application became abandoned for failure to reply in a timely manner to the Notice to File Missing Parts of Nonprovisional Application (Notice), mailed April 16, 2008. The Notice set a period for reply of two (2) months from the mail date of the Notice. No extensions of time under the provisions of 37 CFR 1.136(a) were obtained. Accordingly, the application became abandoned on June 17, 2008. A Notice of Abandonment was mailed December 17, 2008.

The petition satisfies the requirements of 37 CFR 1.137(b) in that petitioner has supplied (1) the reply in the form of an Oath/Declaration with $130.00 surcharge fee, (2) the petition fee of $1,620.00, and (3) a proper statement of unintentional delay.

Telephone inquiries concerning this decision should be directed to Joan Olszewski at (571) 272-7751.

This application is being referred to the Office of Patent Application Processing for further processing in accordance with this decision on petition.

/Liana Walsh/
Liana Walsh
Petitioner Examiner
Office of Petitions

UNITED STATES PATENT AND TRADEMARK OFFICE

UNITED STATES DEPARTMENT OF COMMERCE
United States Patent and Trademark Office
Address: COMMISSIONER FOR PATENTS
P.O. Box 1450
Alexandria, Virginia 22313-1450
www.uspto.gov

APPLICATION NO.	FILING DATE	FIRST NAMED INVENTOR	ATTORNEY DOCKET NO.	CONFIRMATION NO.
12/057,992	03/28/2008	Antoon van der Reijden	1493-010	2321

32905 7590 07/24/2009
JONDLE & ASSOCIATES P.C.
858 HAPPY CANYON ROAD SUITE 230
CASTLE ROCK, CO 80108

EXAMINER
COLLINS, CYNTHIA E

ART UNIT	PAPER NUMBER
1638	

MAIL DATE	DELIVERY MODE
07/24/2009	PAPER

Please find below and/or attached an Office communication concerning this application or proceeding.

The time period for reply, if any, is set in the attached communication.

UNITED STATES PATENT AND TRADEMARK OFFICE

Commissioner for Patents
United States Patent and Trademark Office
P.O. Box 1450
Alexandria, VA 22313-1450
www.uspto.gov

JONDLE & ASSOCIATES P.C.
858 HAPPY CANYON ROAD SUITE 230
CASTLE ROCK CO 80108

JUL 2 4 2009

In re Application of:
Antoon van der Reijden
Serial No.: 12/057,992
Filed: March 28, 2008
Attorney Docket No.: **1493-010**

: PETITION DECISION

This is in response to the petition under 37 CFR § 1.59(b), filed July 20, 2009, to expunge information from the above identified application. This application has not been allowed.

Petitioner requests that the Reply to Request for Information under 37 CFR 1.105, and attachment thereto, submitted to the Patent Office on July 20, 2009, be expunged from the record. Petitioner states either: (A) that the information contains trade secret material, proprietary material and/or material that is subject to a protective order which has not been made public; or (B) that the information submitted was unintentionally submitted and the failure to obtain its return would cause irreparable harm to the party who submitted the information or to the party in interest on whose behalf the information was submitted, and the information has not otherwise been made public. The petition fee set forth in 37 CFR § 1.17(g) has been paid.

This is an examined application which is currently under non-final rejection. As such the information provided has been reviewed, in part, but proceedings in the application have not been terminated. As stated in M.P.E.P. 724, upon allowance or other action closing prosecution in an application, petition may be made for return of Proprietary information. The information cannot be expunged at this time.

The petition is **DISMISSED**. Petitioner may resubmit the petition subsequent to a Notice of Allowability or *ex parte Quayle* action being mailed in the application. No additional petition fee will be required at that time.

Should there be any questions about this decision please contact Marianne C. Seidel by letter addressed to Director, TC 1600, at the address listed above, or by telephone at 571-272-0584 or by facsimile sent to the general Office facsimile number, 703-872-9306.

Marianne C. Seidel
Quality Assurance Specialist
Technology Center 1600

UNITED STATES PATENT AND TRADEMARK OFFICE

DEC 16 2009

Commissioner for Patents
United States Patent and Trademark Office
P.O. Box 1450
Alexandria, VA 22313-1450
www.uspto.gov

JONDLE & ASSOCIATES P.C.
858 HAPPY CANYON ROAD SUITE 230
CASTLE ROCK CO 80108

In re Application of:	:
Antoon Van Der Reijden	: PETITION DECISION
Serial No.: 12/057,992	:
Filed: March 28, 2008	:
Attorney Docket No.: **1493-010**	

This is in response to the renewed petition under 37 CFR § 1.59(b), filed December 7, 2009, to expunge information from the above identified application. This application has been allowed.

Petitioner requests that the Reply to Request for Information Under 37 CFR 1.105, and all attachments thereto, submitted to the Patent Office on July 20, 2009 be expunged from the record. Petitioner states either: (A) that the information contains trade secret material, proprietary material and/or material that is subject to a protective order which has not been made public; or (B) that the information submitted was unintentionally submitted and the failure to obtain its return would cause irreparable harm to the party who submitted the information or to the party in interest on whose behalf the information was submitted, and the information has not otherwise been made public. The petition fee set forth in 37 CFR § 1.17(g) has been paid.

The reasons set forth in this petition establishes to the satisfaction of the Director that expungement of the information is appropriate. The file entry for this document has been closed and as such the document is no longer publicly available, which is the IFW equivalent to removal of a paper document from a paper file wrapper.

Therefore, petitioner's petition is GRANTED.

Should there be any questions about this decision please contact Marianne C. Seidel by letter addressed to Director, TC 1600, at the address listed above, or by telephone at 571-272-0584 or by facsimile sent to the general Office facsimile number, 703-872-9306.

Marianne C. Seidel
Quality Assurance Specialist
Technology Center 1600

UNITED STATES PATENT AND TRADEMARK OFFICE

Commissioner for Patents
United States Patent and Trademark Office
P.O. Box 1450
Alexandria, VA 22313-1450
www.uspto.gov

JONDLE & ASSOCIATES P.C.
858 HAPPY CANYON ROAD SUITE 230
CASTLE ROCK CO 80108

mailed 12/16/09

In re Application of:
Antoon Van Der Reijden
Serial No.: 12/057,992
Filed: March 28, 2008
Attorney Docket No.: **1493-010**

: PETITION DECISION

This is in response to the renewed petition under 37 CFR § 1.59(b), filed December 7, 2009, to expunge information from the above identified application. This application has been allowed.

Petitioner requests that the Reply to Request for Information Under 37 CFR 1.105, and all attachments thereto, submitted to the Patent Office on July 20, 2009 be expunged from the record. Petitioner states either: (A) that the information contains trade secret material, proprietary material and/or material that is subject to a protective order which has not been made public; or (B) that the information submitted was unintentionally submitted and the failure to obtain its return would cause irreparable harm to the party who submitted the information or to the party in interest on whose behalf the information was submitted, and the information has not otherwise been made public. The petition fee set forth in 37 CFR § 1.17(g) has been paid.

The reasons set forth in this petition establishes to the satisfaction of the Director that expungement of the information is appropriate. The file entry for this document has been closed and as such the document is no longer publicly available, which is the IFW equivalent to removal of a paper document from a paper file wrapper.

Therefore, petitioner's petition is GRANTED.

Should there be any questions about this decision please contact Marianne C. Seidel by letter addressed to Director, TC 1600, at the address listed above, or by telephone at 571-272-0584 or by facsimile sent to the general Office facsimile number, 703-872-9306.

Marianne C. Seidel
Quality Assurance Specialist
Technology Center 1600

UNITED STATES PATENT AND TRADEMARK OFFICE

UNITED STATES DEPARTMENT OF COMMERCE
United States Patent and Trademark Office
Address: COMMISSIONER FOR PATENTS
P.O. Box 1450
Alexandria, Virginia 22313-1450
www.uspto.gov

APPLICATION NO.	FILING DATE	FIRST NAMED INVENTOR	ATTORNEY DOCKET NO.	CONFIRMATION NO.
12/058,022	03/28/2008	Steven H. Schuetz	1493-011	2371

32905 7590 07/24/2009
JONDLE & ASSOCIATES P.C.
858 HAPPY CANYON ROAD SUITE 230
CASTLE ROCK, CO 80108

EXAMINER
COLLINS, CYNTHIA E

ART UNIT	PAPER NUMBER
1638	

MAIL DATE	DELIVERY MODE
07/24/2009	PAPER

Please find below and/or attached an Office communication concerning this application or proceeding.

The time period for reply, if any, is set in the attached communication.

UNITED STATES PATENT AND TRADEMARK OFFICE

Commissioner for Patents
United States Patent and Trademark Office
P.O. Box 1450
Alexandria, VA 22313-1450
www.uspto.gov

JONDLE & ASSOCIATES P.C.
858 HAPPY CANYON ROAD SUITE 230
CASTLE ROCK CO 80108

JUL 2 4 2009

In re Application of:
Steven H. Schuetz
Serial No.: 12/058,022
Filed: March 28, 2008
Attorney Docket No.: **1493-011**

: PETITION DECISION

This is in response to the petition under 37 CFR § 1.59(b), filed July 20, 2009, to expunge information from the above identified application. This application has not been allowed.

Petitioner requests that the Reply to Request for Information under 37 CFR 1.105, and attachment thereto, submitted to the Patent Office on July 20, 2009, be expunged from the record. Petitioner states either: (A) that the information contains trade secret material, proprietary material and/or material that is subject to a protective order which has not been made public; or (B) that the information submitted was unintentionally submitted and the failure to obtain its return would cause irreparable harm to the party who submitted the information or to the party in interest on whose behalf the information was submitted, and the information has not otherwise been made public. The petition fee set forth in 37 CFR § 1.17(g) has been paid.

This is an examined application which is currently under non-final rejection. As such the information provided has been reviewed, in part, but proceedings in the application have not been terminated. As stated in M.P.E.P. 724, upon allowance or other action closing prosecution in an application, petition may be made for return of Proprietary information. The information cannot be expunged at this time.

The petition is **DISMISSED**. Petitioner may resubmit the petition subsequent to a Notice of Allowability or *ex parte Quayle* action being mailed in the application. No additional petition fee will be required at that time.

Should there be any questions about this decision please contact Marianne C. Seidel by letter addressed to Director, TC 1600, at the address listed above, or by telephone at 571-272-0584 or by facsimile sent to the general Office facsimile number, 703-872-9306.

Marianne C. Seidel
Quality Assurance Specialist
Technology Center 1600

UNITED STATES PATENT AND TRADEMARK OFFICE

DEC 1 6 2009

Commissioner for Patents
United States Patent and Trademark Office
P.O. Box 1450
Alexandria, VA 22313-1450
www.uspto.gov

JONDLE & ASSOCIATES P.C.
858 HAPPY CANYON ROAD SUITE 230
CASTLE ROCK CO 80108

In re Application of:	:
Steven H. Schuetz	: PETITION DECISION
Serial No.: 12/058,022	:
Filed: March 28, 2008	:
Attorney Docket No.: **1493-011**	

This is in response to the renewed petition under 37 CFR § 1.59(b), filed December 7, 2009, to expunge information from the above identified application. This application has been allowed.

Petitioner requests that the Reply to Request for Information Under 37 CFR 1.105, and all attachments thereto, submitted to the Patent Office on July 20, 2009 be expunged from the record. Petitioner states either: (A) that the information contains trade secret material, proprietary material and/or material that is subject to a protective order which has not been made public; or (B) that the information submitted was unintentionally submitted and the failure to obtain its return would cause irreparable harm to the party who submitted the information or to the party in interest on whose behalf the information was submitted, and the information has not otherwise been made public. The petition fee set forth in 37 CFR § 1.17(g) has been paid.

The reasons set forth in this petition establishes to the satisfaction of the Director that expungement of the information is appropriate. The file entry for this document has been closed and as such the document is no longer publicly available, which is the IFW equivalent to removal of a paper document from a paper file wrapper.

Therefore, petitioner's petition is GRANTED.

Should there be any questions about this decision please contact Marianne C. Seidel by letter addressed to Director, TC 1600, at the address listed above, or by telephone at 571-272-0584 or by facsimile sent to the general Office facsimile number, 703-872-9306.

Marianne C. Seidel
Quality Assurance Specialist
Technology Center 1600

UNITED STATES PATENT AND TRADEMARK OFFICE

Commissioner for Patents
United States Patent and Trademark Office
P.O. Box 1450
Alexandria, VA 22313-1450
www.uspto.gov

JONDLE & ASSOCIATES P.C.
858 HAPPY CANYON ROAD SUITE 230
CASTLE ROCK CO 80108

mailed 12/10/09

In re Application of:	
Steven H. Schuetz	PETITION DECISION
Serial No.: 12/058,022	
Filed: March 28, 2008	
Attorney Docket No.: **1493-011**	

This is in response to the renewed petition under 37 CFR § 1.59(b), filed December 7, 2009, to expunge information from the above identified application. This application has been allowed.

Petitioner requests that the Reply to Request for Information Under 37 CFR 1.105, and all attachments thereto, submitted to the Patent Office on July 20, 2009 be expunged from the record. Petitioner states either: (A) that the information contains trade secret material, proprietary material and/or material that is subject to a protective order which has not been made public; or (B) that the information submitted was unintentionally submitted and the failure to obtain its return would cause irreparable harm to the party who submitted the information or to the party in interest on whose behalf the information was submitted, and the information has not otherwise been made public. The petition fee set forth in 37 CFR § 1.17(g) has been paid.

The reasons set forth in this petition establishes to the satisfaction of the Director that expungement of the information is appropriate. The file entry for this document has been closed and as such the document is no longer publicly available, which is the IFW equivalent to removal of a paper document from a paper file wrapper.

Therefore, petitioner's petition is GRANTED.

Should there be any questions about this decision please contact Marianne C. Seidel by letter addressed to Director, TC 1600, at the address listed above, or by telephone at 571-272-0584 or by facsimile sent to the general Office facsimile number, 703-872-9306.

Marianne C. Seidel
Quality Assurance Specialist
Technology Center 1600

UNITED STATES PATENT AND TRADEMARK OFFICE

Commissioner for Patents
United States Patent and Trademark Office
P.O. Box 1450
Alexandria, VA 22313-1450
www.uspto.gov

SMART & BIGGAR
P.O. BOX 2999, STATION D
900-55 METCALFE STREET
OTTAWA ON K1P 5Y6 CA CANADA

MAILED

MAY 27 2010

OFFICE OF PETITIONS

In re Application of	:	
John Bradley Morris, et al.	:	
Application No. 12/058,027	:	DECISION GRANTING PETITION
Filed: March 28, 2008	:	UNDER 37 CFR 1.313(c)(2)
Attorney Docket No. 77682-589	:	

This is a decision on the petition under 37 CFR 1.313(c)(2), filed, May 26, 2010 to withdraw the above-identified application from issue after payment of the issue fee.

The petition is **GRANTED**.

The above-identified application is withdrawn from issue for consideration of a submission under 37 CFR 1.114 (request for continued examination). *See* 37 CFR 1.313(c)(2).

Petitioner is advised that the issue fee paid on May 13, 2010 cannot be refunded. If, however, this application is again allowed, petitioner may request that it be applied towards the issue fee required by the new Notice of Allowance.[1]

Telephone inquiries should be directed to Terri Johnson at (571) 272-2991.

This application is being referred to Technology Center AU 2817 for processing of the request for continued examination under 37 CFR 1.114 and for consideration of the concurrently filed information disclosure statement.

Terri Johnson
Petitions Examiner
Office of Petitions

---

[1] *The request to apply the issue fee to the new Notice may be satisfied by completing and returning the new Part B – Fee(s) Transmittal Form (along with any balance due at the time of submission). Petitioner is advised that the Issue Fee Transmittal Form must be completed and timely submitted to avoid abandonment of the application.*

UNITED STATES PATENT AND TRADEMARK OFFICE

UNITED STATES DEPARTMENT OF COMMERCE
United States Patent and Trademark Office
Address: COMMISSIONER FOR PATENTS
P.O. Box 1450
Alexandria, Virginia 22313-1450
www.uspto.gov

APPLICATION NO.	FILING DATE	FIRST NAMED INVENTOR	ATTORNEY DOCKET NO.	CONFIRMATION NO.
12/058,043	03/28/2008	Harry Barowski	DE920080017US1	2420

48150 7590 06/13/2008
MCGINN INTELLECTUAL PROPERTY LAW GROUP, PLLC
8321 OLD COURTHOUSE ROAD
SUITE 200
VIENNA, VA 22182-3817

EXAMINER
CHAN, EDDIE P

ART UNIT	PAPER NUMBER
2183	

MAIL DATE	DELIVERY MODE
06/13/2008	PAPER

Please find below and/or attached an Office communication concerning this application or proceeding.

The time period for reply, if any, is set in the attached communication.

UNITED STATES PATENT AND TRADEMARK OFFICE

Commissioner for Patents
United States Patent and Trademark Office
P.O. Box 1450
Alexandria, VA 22313-1450
www.uspto.gov

MCGINN INTELLECTUAL PROPERTY LAW GROUP, PLLC
8321 OLD COURTHOUSE ROAD
SUITE 200
VIENNA VA 22182-3817

In re Application of: Barowski et al. Serial No.: 12/058043 Filed: March 28, 2008 Docket: DE920080017US1 Title: MULTI-CYCLE REGISTER FILE BYPASS	DECISION ON PETITION TO MAKE SPECIAL FOR NEW APPLICATION UNDER 37 C.F.R. § 1.102 & M.P.E.P. § 708.02

This is a decision on the petition filed on March 28, 2008 to make the above-identified application special for accelerated examination procedure under 37 C.F.R. § 1.102(d).

The petition to make the application special is **DISMISSED**.

REGULATION AND PRACTICE

A grantable petition to make special under 37 C.F.R. § 1.102(d) and pursuant to the "Change to Practice for Petitions in Patent Applications to Make Special and for Accelerated Examination" published in the Federal Register on June 26, 2006 (71 Fed. Reg. 36323), must satisfy the following conditions:

I. Conditions Regarding the Application:

1. the application must be a non-reissue utility or design application filed under 37 CFR 1.111(a);

2. the application, the petition and the required fees must be filed electronically using the USPTO's electronic filing system (EFS), or EFS-web; if not filed electronically, a statement asserting that EFS and EFS-web were not available during the normal business hours.

3. at the time of filing, the application must be complete under 37 CFR 1.51 and in condition for examination;

4. the application must contain three or fewer independent claims and twenty or fewer total claims and the claims must be directed to a single invention.

II. Conditions Regarding the Petition:

The petition must:

1. be filed with the application;

2. include a statement that applicant agrees not to separately argue the patentability of any independent claim during any appeal in the application;

3. include a statement that applicant agrees to make an election without traverse in a telephone interview.

4. include a statement that applicant agrees to conduct such an interview when requested by the examiner.

5. include a statement, made based on a good faith belief, that a preexamination search in compliance with the following requirements, was conducted, including an identification of the filed of search by United States class and subclass, where applicable, and for database searches, the search logic or chemical structure or sequence used as a query, the name of the file(s) searched and the database service, and the date of the search.

The preexamination search must:

5.1 involve U.S. patents and patent application publications, foreign patent documents, and non-patent literature, unless the applicant can justify with reasonable certainty that no references more pertinent than those already identified are likely to be found in the eliminated sources and includes such a justification with this statement;

5.2. be directed to the claimed invention and encompass all of the features of the claims, giving the claims the broadest reasonable expectation;

5.3. encompass the disclosed features that may be claimed.

6. must provide in support of the petition an accelerated examination support document. An accelerated examination support document must include:

6.1. an information disclosure statement (IDS) in compliance with 37 CFR 1.98 citing each reference deemed most closely related to the subject matter of each of the claims;

6.2. an identification of all the limitations in the claims that are disclosed by the reference specifying where the limitation is disclosed in the cited reference;

6.3. a detailed explanation of how each of the claims are patentable over the references cited with particularity required by 37 CFR 1.111(b) and (c);

6.4. a concise statement of the utility of the invention as defined in each of the independent claims (unless the application is a design application);

6.5. a showing of where each limitation of the claims finds support under 35 USC 112, first paragraph, in the written description of the specification. If applicable, the showing must also identify: (1) each means- (or step) plus-function claim element that invokes consideration under 35 UDC 112, sixth paragraph; and (2) the structure, material, or acts in the specification that corresponds to each means- (or step) plus-function claim element that invokes consideration under 35 UDC 112, sixth paragraph; if the application claims the benefit of one or more applications under title 35, United States Code, the showing must also include where each limitation of the claims finds support under 35 USC 112, first paragraph, in each such application in which such supports exists;

6.6. an identification of any cited references that may be disqualified under 35 USC 103(c).

REVIEW OF FACTS

The conditions I.1 – I.4, II.1 – II.4, II.5, II.5.3, and II.6.6 above are considered to have been met. However, the petition fails to comply with conditions II.5.1 and II.5.2, II.6.1, II.6.2, II.6.3, II.6.4 and II.6.5 above. Therefore, the petition fails to meet the required conditions to be accorded special status under the accelerated examination procedure.

With respect to item **II.5.1 and II.5.2** above, petitioner is required to provide keywords and phrases encompassing limitations of each claim including those deemed by the applicant as patentable features distinguishing the claimed invention from the cited prior art used in any database search. The preexam search must be directed to the (instant) claimed invention and encompass all of the disclosed features of the (instant) claims.

The guidelines for Applicants under the New Accelerated Exam Proc states as follows in Part I item 8 section 2.: A text search of the US patents and published patent applications that covers the subject matter of the independent claims using terms recognized in the art given their broadest reasonable interpretation. The search should consider **individual features by themselves and combinations of features**. The search should cover the **broadest scope encompassed by the claims as well as claims of narrow and intermediate breadth**.

With respect to items 5.1 - 5.2 above, on the class/subclass search, given the total number of patents in all the class/subclasses listed as searched, **Petitioner should clarify if a limited classified search was conducted, and if so, how it was limited. Otherwise, a mere listing of class/subclass will be taken as a representation that all of the documents were reviewed in their entirety.**

Regarding the requirement of MPEP § 708.02(a)(I.)(I)(1) and item **6.1** above, the IDS submitted with the application lists a reference to Buti et al. However, the AESD does not provide an identification of how the claim limitations are taught by the Buti reference. Nor is there an explanation of how the instant application distinguishes over the Buti reference. Hence the IDS is deemed insufficient. If applicant wishes to cite references that are not required in an AESD for the examiner to consider, applicant may submit such references in a separate information disclosure statement (IDS) in compliance with 37 CFR 1.98. Applicant should clearly identify the IDS of the AESD that is in support of the petition to make special, and applicant should clearly identify the separate IDS containing references not discussed in the accelerated examination support document, and that is not in support of the petition to make special. Consistent with 37 CFR 10.18, any reference submitted in a separate IDS that is not part of an AESD is a representation by applicant to the USPTO that no reference submitted in the separate IDS is deemed closer to the subject matter of at least one claim than the references provided in the AESD. If applicant deems references found after the initial filing to be closer to the subject matter of at least one claim than the references provided in the AESD, then applicant needs to supplement the AESD to account for these references.

Regarding the requirement of MPEP § 708.02(a)(I.)(I)(3) and item **6.2 above**, applicant only makes a nominal discussion of the Lee, Johnson, Hinton, and Nguyen references cited by applicant in the AESD. Applicant should provide a claim-by-claim mapping of the pertinent subject matter

disclosed in each of the references, specifically identifying each claim limitation and corresponding disclosure within the reference, citing to specific relevant portions of each reference. Examples can be found on USPTO website, using the link http://www.uspto.gov/web/patents/accelerated/ and clicking on "Sample Accelerated Examination Support Document".

Further, the limitations "system including ... a plurality of execution units, wherein at least one of the plurality of execution units depends on data from at least one other of the plurality of execution units, said method comprising:
calculating a result of a first execution unit of the plurality of execution units;
storing the result of the first execution unit of the plurality of execution units in an output latch of the first execution unit;
storing the result of the first execution unit in the register file;" have not been recited to be taught by any of the cited references. However, they are not listed in the "Explanation of patentability" section as being features that distinguish the claimed invention over the cited prior art. Hence it is not clear if the above claim limitations are taught by the cited references or not.

Furthermore, limitations of claims are compared as a whole to the reference. It is not clear if the references teach a portion of the limitation being addressed. **Any reference which teaches any portion of the limitation must be so identified even if the reference does not teach the entirety of the limitation. Petitioner should review all claim limitations, especially those believed to be patentable distinctions from the cited references to ensure that the search covered these concepts, and update the search and/or provide any clarifications.** Examples of a properly documented search are available at
http://www.uspto.gov/web/patents/accelerated/ae_presearch_sample.doc

In addition, petitioner should **review the Identification of Limitations disclosed by References and the Detailed Explanation of Patentability** sections **in view of updated search, and changes and clarifications, and provide clarifications, as necessary, to ensure compliance with the requirement of items 6.2 and 6.3 above.**

Regarding the requirement of MPEP § 708.02(a)(I.)(I) and item II 6.3; the Accelerated Examination Support Document (AESD) does not provide a detailed explanation of how each of the claims are patentable with the particularity required by 37 CFR 1.111(b) and (c). In section 9(C) of the AESD, petitioner asserts that "all of the references" whether considered singularly or in reasonable combination, fail to teach or suggest the identified limitations; thus concluded that the claims are patentably distinguished over the references alone or in combination.

By identifying all limitations as those limitations that the reference(s) do not show or suggest, the petition fails to discuss the claimed limitations with respect to the references in accordance with the requirements of 37 CFR 1.111 (b) and (c). That is, the petition does not specifically properly compare/contrast the claimed invention with respect to the relevant teachings in the prior art in the identified references. A general allegation that "all of the references fail to at least teach ... and therefore patentably distinguish over each of the references alone or in combination" does not comply with the requirements. Petitioner fails clearly point out the patentable novelty which he or she thinks the claims present in view of the state of the art

disclosed by the references cited. The Office cannot infer or guess what petitioner believes the differences between the claims and the teachings of the prior art to be. For these reasons, the petition does not meet the requirement of MPEP § 708.02(a)(I.)(I)(3).

Petitioner is requested to clearly point out claim limitations not taught by any of the references and how the limitations are patentably distinguished over the references cited alone or in combination.

With regard to the requirement of MPEP § 708.02(a)(I.)(I)(4) and item 6.4 above, the concise statement of the utility ***must be of the invention as defined in each of the independent claims***.

Finally, with respect to the requirement of MPEP § 708.02(a)(I.)(I)(5) and item **6.5** above, the Accelerated Examination Support Document is **required to show where each limitation of the claims finds support under 35 USC 112, first paragraph, in the written description of the specification**. The AESD only identifies paragraph [0008] and Figure 3 to teach all the claim limitations of the only claim, without identifying any claim limitation and corresponding support in the cited portions of the specification/drawing. A review of the paragraph 8 indicates that the description on this paragraph is identical to the claimed language of claim 1; a general statement that all limitations of claim(s) can be found in all of the cited figure and pointing to the specification having a verbatim of the claim language cannot be accepted to satisfy such a requirement of MPEP § 708.02(a)(I.)(I)(5) and item II.6.5 above. **Applicant must identify portions of text in the specification by page and line number, and specific elements of figure instead of referring to the whole figure, for each of the claim limitations, as providing support under 35 U.S.C. 112, First paragraph**. A clarification and identification of support for each limitation of each claim is required.

DECISION

For the above-stated reasons, the petition is **dismissed**. The application will therefore be taken up by the examiner for action in its regular turn.

Petitioner is given a single opportunity to perfect the petition. Any request for reconsideration of this decision must be submitted within 1 (one) month or 30 (thirty) days, whichever is longer, (no extension of time under 37 CFR 1.136(a)) from the date of this decision in order to be considered timely. Any request for reconsideration must address the deficiencies indicated above.

Petitioner is reminded that, upon granting of the special status of the application on request for reconsideration, the application will be processed expeditiously. However, due to the dismissal of the instant petition, examination may not be completed within twelve months of the filing date of the application.

Any inquiry regarding this decision should be directed to Mano Padmanabhan, at (571) 272-4210.

Mano Padmanabhan

MANO PADMANABHAN
WQAS, TC2100, WG2180

UNITED STATES PATENT AND TRADEMARK OFFICE

UNITED STATES DEPARTMENT OF COMMERCE
United States Patent and Trademark Office
Address: COMMISSIONER FOR PATENTS
P.O. Box 1450
Alexandria, Virginia 22313-1450
www.uspto.gov

APPLICATION NO.	FILING DATE	FIRST NAMED INVENTOR	ATTORNEY DOCKET NO.	CONFIRMATION NO.
12/058,043	03/28/2008	Harry Barowski	DE920080017US1	2420

48150 7590 10/01/2008
MCGINN INTELLECTUAL PROPERTY LAW GROUP, PLLC
8321 OLD COURTHOUSE ROAD
SUITE 200
VIENNA, VA 22182-3817

EXAMINER
CHAN, EDDIE P

ART UNIT	PAPER NUMBER
2183	

MAIL DATE	DELIVERY MODE
10/01/2008	PAPER

Please find below and/or attached an Office communication concerning this application or proceeding.

The time period for reply, if any, is set in the attached communication.

UNITED STATES PATENT AND TRADEMARK OFFICE

Commissioner for Patents
United States Patent and Trademark Office
P.O. Box 1450
Alexandria, VA 22313-1450
www.uspto.gov

MCGINN INTELLECTUAL PROPERTY LAW GROUP, PLLC
8321 OLD COURTHOUSE ROAD
SUITE 200
VIENNA VA 22182-3817

In re Application of: Barowski et al. Serial No.: 12/058043 Filed: March 28, 2008 Docket: DE920080017US1 Title: MULTI-CYCLE REGISTER FILE BYPASS	DECISION ON PETITION TO MAKE SPECIAL FOR NEW APPLICATION UNDER 37 C.F.R. § 1.102 & M.P.E.P. § 708.02

This is a decision on the renewed petition filed on July 14, 2008, to make the above-identified application special for accelerated examination procedure under 37 C.F.R. § 1.102(d). The original petition, submitted on March 20, 2008, was dismissed in the decision mailed on June 13, 2008.

The petition to make the application special is **GRANTED**.

The application is eligible for accelerated examination and the petition complies with the conditions for granting the application special status pursuant to the "Change to Practice for Petitions in Patent Applications to Make Special and for Accelerated Examination" published June 26, 2006, in the Federal Register. (71 Fed. Reg. 36323).

The prosecution of the instant application will be conducted expeditiously according to the following guidelines.

1. The application will be docketed to an examiner and taken up for action within two weeks of the date of this decision.

2. Restriction Practice:
   If the examiner determines that the claims are not directed to a single invention, a telephone request to elect one single invention will be made pursuant to MPEP 812.01. As a prerequisite to the grant of this petition, the applicant has agreed to make an oral election, by telephone, without traverse. If the applicant refuses to make an election without traverse, or the examiner cannot reach the applicant after a reasonable effort, the examiner

will treat the first claimed invention (invention defined by claim 1) as having being constructively elected without traverse for examination.

3. Office action:
If it is determined that, after appropriate consultation, there is a potential rejection or any other issue to be addressed, the examiner will telephone the applicant and arrange an interview to discuss and resolve the issue. An Office action, other than a Notice of Allowance and Fee(s) Due (Notice of Allowance), will not be issued unless either: 1) an interview was conducted but did not result in agreed to action that places the application in condition for allowance, or, 2) a determination is made that an interview would be unlikely to result in the application being placed in condition for allowance, and 3) an internal conference has been held to review any rejection of any claim.

4. Time for Reply:
An Office action other than a Notice of Allowance or a final Office action will set a shortened statutory period of one month or thirty days, whichever is longer, for reply with no extension of time available under 37 CFR 1.136(a). Failure to timely file a reply within this non-extendible period for reply will result in the abandonment of the application.

5. Reply by Applicant:
A timely reply to an Office action other than the Notice of Allowance must be submitted electronically via EFS or EFS-web and limited to addressing the rejections, objections and requirement made. Any amendment that attempts to: 1) add claims which would result in more than three pending independent claims or more than twenty pending total claims; 2) present claims not encompassed by the pre-examination search or an updated accelerated examination support document; or 3) present claims that are directed a non-elected invention or an invention other than that previously claimed and examined in the application, will be treated as not fully responsive and will not be entered.

For any amendment to the claims (including any new claim) that is not encompassed by the accelerated examination support document, applicant must provide an updated accelerated examination support document that encompasses the amended or new claims at the time of filing of the amendment.

To proceed expeditiously with the examination, it is recommended that a reply with amendments made to any claim or with any new claim being added be accompanied by an updated accelerated examination support document or a statement explaining how the amended or new claim is supported by the original accelerated examination support document.

6. Information Disclosure Statement (IDS):
Any IDS filed during prosecution must be submitted electronically via EFS or EFS-web, accompanied by an updated accelerated examination support document, and be in compliance with 37 CFR 1.97 and 1.98.

7. Post-Allowance Processing:

To expedite processing of the allowed application into a patent, the applicant must: 1) pay the required fees within one month of the date of the Notice of Allowance, and 2) not file any post allowance papers not required by the Office. In no event may the issue fee be paid and accepted later than three months from the date of the Notice of Allowance.

8. After-Final and Appeal Procedures:
   To expedite prosecution, after receiving the final Office action, applicant must: 1) promptly file a notice of appeal, an appeal brief and appeal fees; and 2) not request a pre-appeal brief conference.

   Any amendment, affidavit or other evidence filed after final Office action must comply with applicable rules and the requirements outlined in numbered paragraphs 5 and 6 above.

   On appeal, the application will proceed according to normal appeal procedures. After appeal, the application will again be treated special.

9. Proceedings Outside the Normal Examination Process:
   If the application becomes involved in a proceeding that is outside the normal examination process (e.g., a secrecy order, national security review, interference proceeding, petitions under 37 CFR 1.181, 182 or 183), the application will be treated special before and after such proceeding.

10. Final Disposition:
    The twelve-month goal of this accelerated examination procedure ends with a final disposition. The mailing of a final Office action, a Notice of Allowance, the filing of a Notice of Appeal, or the filing of a Request for Continued Examination (RCE) is the final disposition.

If, during prosecution, a paper is not filed electronically using EFS-web, a reply is filed but is not fully responsive, the application is involved in an appeal, or a proceeding outside normal examination process, the application will still be examined expeditiously, however, the final disposition may occur more than twelve months from the filing of the application. In addition, Applicant is reminded that due to the dismissal of the previous petition submission, examination may not be completed within twelve months of the filing date of the application.

Any inquiry regarding this decision should be directed to Mano Padmanabhan at (571) 272-4210. If attempts to reach the undersigned by telephone are unsuccessful, Kakali Chaki, Quality Assurance Specialist, can be reached at (571) 272-3719.

/Mano Padmanabhan/

Mano Padmanabhan
WQAS Technology Center 2100
Computer Architecture, Software, and Information Security

UNITED STATES PATENT AND TRADEMARK OFFICE

UNITED STATES DEPARTMENT OF COMMERCE
United States Patent and Trademark Office
Address: COMMISSIONER FOR PATENTS
P.O. Box 1450
Alexandria, Virginia 22313-1450
www.uspto.gov

SHUMAKER & SIEFFERT , P.A
1625 RADIO DRIVE , SUITE 300
WOODBURY, MN 55125

Mail Date: 04/20/2010

Applicant	: Timothy J. Denison	: DECISION ON REQUEST FOR
Patent Number	: 7622988	: RECALCULATION of PATENT
Issue Date	: 11/24/2009	: TERM ADJUSTMENT IN VIEW
Appliction No	: 12/058,066	: OF WYETH AND NOTICE OF INTENT TO
Filed	: 03/28/2008	: ISSUE CERTIFICATE OF CORRECTION
		:

The Request for Recalculation is **GRANTED** to the extent indicated.

The patent term adjustment has been determined to be **0** days. The USPTO will *sua sponte* issue a certificate of correction reflecting the amount of PTA days determined by the recalculation.

Prior to the issuance of the certificate of correction, the USPTO will afford patentee an opportunity to be heard and request reconsideration. Accordingly, patentee has **one month or thirty (30) days**, whichever is longer, to file a request for reconsideration of this patent term adjustment calculation. See 35 U.S.C. 154(b)(3)(B)(ii) and 37 CFR 1.322(a)(4). No extensions of time will be granted under 37 CFR 1.136.

Patentee should use document code PET.OP if electronically filing a request for reconsideration of this patent term adjustment calculation. The patentee must also include the information required by 37 CFR 1.705(b)(2) and the fee required by 37 CFR 1.18(e). If patentee does not file a timely request for reconsideration of this patent term adjustment calculation including the information required by 37 CFR 1.705(b)(2) and the fee required by 37 CFR 1.18(e), the USPTO will issue a certificate of correction reflecting the PTA determination noted above.

Patentee should be aware that in order to preserve the right to review in the United States District Court for the District of Columbia of the USPTO patent term adjustment determination, patentee must ensure that he or she also take the steps required under 35 U.S.C. 154(b)(4)(A) in a timely manner. Nothing in the request for recalculation should be construed as providing an alternative time frame for commencing a civil action under 35 U.S.C. 154(b)(4)(A).

Any questions concerning this decision should be directed to the Office of Patent Legal Administration at 571-272-7702.

UNITED STATES PATENT AND TRADEMARK OFFICE

Commissioner for Patents
United States Patent and Trademark Office
P.O. Box 1450
Alexandria, VA 22313-1450
www.uspto.gov

PATTERSON & SHERIDAN L.L.P. NJ Office
595 SHREWSBURY AVE, STE 100
FIRST FLOOR
SHREWSBURY, NJ 07702

COPY MAILED

MAY 21 2008

OFFICE OF PETITIONS

In re Application of	:	
SCHOOR, Howard M.	:	
Application No. 12/058,099	:	DECISION ON PETITION
Filed: March 28, 2008	:	TO MAKE SPECIAL UNDER
Attorney Docket No. **SCHR/002**	:	37 CFR 1.102(c)(1)
	:	

This is a decision on the petition under 37 CFR 1.102(c)(1), filed April 28, 2008, to make the above-identified application special based on applicant's age as set forth in M.P.E.P. § 708.02, Section IV.

The petition is **GRANTED**.

A grantable petition to make an application special under 37 CFR 1.102(c)(1) and MPEP § 708.02, Section IV: Applicant's Age must be accompanied by evidence showing that at least one of the applicants is 65 years of age, or more, such as a birth certificate or a statement by applicant. No fee is required

The instant petition includes a statement by Howard M. Schoor attesting that he is over 65 years of age. Accordingly, the above-identified application has been accorded "special" status.

Telephone inquiries concerning this decision should be directed to Michelle R. Eason at 571-272-4231.

All other inquiries concerning either the examination or status of the application should be directed to the Technology Center.

This application is being referred to the Office of Initial Patent Examination for processing. This application will be accorded "special" status when pre-examination processing is done.

Michelle R. Eason
Paralegal Specialist
Office of Petitions

UNITED STATES PATENT AND TRADEMARK OFFICE

UNITED STATES DEPARTMENT OF COMMERCE
United States Patent and Trademark Office
Address: COMMISSIONER FOR PATENTS
P.O. Box 1450
Alexandria, Virginia 22313-1450
www.uspto.gov

DORITY & MANNING, P.A.
POST OFFICE BOX 1449
GREENVILLE, SC 29602-1449

Mail Date: 04/21/2010

Applicant	: Joachim Clauss	: DECISION ON REQUEST FOR
Patent Number	: 7655726	: RECALCULATION of PATENT
Issue Date	: 02/02/2010	: TERM ADJUSTMENT IN VIEW
Appliction No	: 12/058,124	: OF WYETH AND NOTICE OF INTENT TO
Filed	: 03/28/2008	: ISSUE CERTIFICATE OF CORRECTION
		:

The Request for Recalculation is **GRANTED** to the extent indicated.

The patent term adjustment has been determined to be **0** days. The USPTO will *sua sponte* issue a certificate of correction reflecting the amount of PTA days determined by the recalculation.

Prior to the issuance of the certificate of correction, the USPTO will afford patentee an opportunity to be heard and request reconsideration. Accordingly, patentee has **one month or thirty (30) days**, whichever is longer, to file a request for reconsideration of this patent term adjustment calculation. See 35 U.S.C. 154(b)(3)(B)(ii) and 37 CFR 1.322(a)(4). No extensions of time will be granted under 37 CFR 1.136.

Patentee should use document code PET.OP if electronically filing a request for reconsideration of this patent term adjustment calculation. The patentee must also include the information required by 37 CFR 1.705(b)(2) and the fee required by 37 CFR 1.18(e). If patentee does not file a timely request for reconsideration of this patent term adjustment calculation including the information required by 37 CFR 1.705(b)(2) and the fee required by 37 CFR 1.18(e), the USPTO will issue a certificate of correction reflecting the PTA determination noted above.

Patentee should be aware that in order to preserve the right to review in the United States District Court for the District of Columbia of the USPTO patent term adjustment determination, patentee must ensure that he or she also take the steps required under 35 U.S.C. 154(b)(4)(A) in a timely manner. Nothing in the request for recalculation should be construed as providing an alternative time frame for commencing a civil action under 35 U.S.C. 154(b)(4)(A).

Any questions concerning this decision should be directed to the Office of Patent Legal Administration at 571-272-7702.

UNITED STATES PATENT AND TRADEMARK OFFICE

Commissioner for Patents
United States Patent and Trademark Office
P.O. Box 1450
Alexandria, VA 22313-1450
www.uspto.gov

MAILED

MAY 17 2010

OFFICE OF PETITIONS

SPRINKLE IP LAW GROUP
1301 W. 25TH STREET
SUITE 408
AUSTIN, TX 78705

In re Application of	:	
Wilkinson et al.	:	DECISION ON PETITION
Application No. 12/058,157	:	TO WITHDRAW
Filed: March 28, 2008	:	FROM RECORD
Attorney Docket No. INIT1260-1	:	

This is a decision on the Request to Withdraw as attorney or agent of record under 37 C.F.R. § 1.36(b), filed on April 1, 2010.

The request is **NOT APPROVED**.

The Office no longer accepts address changes to a new practitioner or law firm filed with requests under 37 C.F.R. § 1.36(b). The Office will only accept correspondence address changes to the most current address information provided for the assignee of the entire interest *who properly became of record under 37 CFR 3.71,* or, if no assignee of the entire interest has properly been made of record, the most current address information provided for the first named inventor. 37 CFR 3.71(c) states:

> *An assignee becomes of record either in a national patent application or a reexamination proceeding by filing a statement in compliance with § 3.73(b) that is signed by a party who is authorized to act on behalf of the assignee.*

Further, The Office will require the practitioner(s) to certify that he, she or they have: (1) given reasonable notice to the client, prior to the expiration of the reply period, which the practitioner(s) intends to withdraw from employment; (2) delivered to the client or a duly authorized representative of the client all papers and property (including funds) to which the client is entitled; and (3) notified the client of any replies that may be due and the time frame within which the client must respond, pursuant to 37 CFR 10.40 (c).

The current request does not state the proper certifications. Accordingly, any subsequent requests must include all of the above listed certifications pursuant to 37 CFR 10.40.

All future communications from the Office will be directed to above-listed address until otherwise properly notified by the applicant or a proper change of correspondence address have been submitted.

There are no outstanding Office actions that require a reply from the applicant.

Telephone inquires concerning this decision should be directed to the undersigned at (571) 272-6059. All other inquires concerning either the examination or status of the application should be directed to the Technology Center.

A. Kelley

Alicia Kelley
Petitions Examiner
Office of Petitions

UNITED STATES PATENT AND TRADEMARK OFFICE

Commissioner for Patents
United States Patent and Trademark Office
P.O. Box 1450
Alexandria, VA 22313-1450
www.uspto.gov

BC

April 12, 2010

In re application of Kenji Sato Serial No. 12/058,215 Filed: March 28, 2008 For: PLASMA PROCESSING APPARATUS, RADIO FREQUENCY GENERATOR AND CORRECTION METHOD THEREFOR	: : : : : : :	DECISION ON REQUEST TO PARTICIPATE IN PATENT PROSECUTION HIGHWAY PROGRAM AND PETITION TO MAKE SPECIAL UNDER 37 CFR 1.102(d)

This is a decision on the request to participate in the Patent Prosecution Highway (PPH) program and the petition under 37 CFR 1.102(d) to make the above-identified application special filed March 12, 2010.

The request and petition are **GRANTED**.

A grantable request to participate in the PPH program and petition to make special require:

(1) The U.S. application must validly claim priority under 35 U.S.C. 119(a) to one or more applications filed in the KIPO, note where the KIPO application with similar claims is not the same application from which the U.S. application claims priority that the applicant must identify the relationship between the KIPO application with similar claims and the KIPO priority application;

(2) Applicant must submit a copy of:
   a. The allowable/patentable claim(s) from the KIPO application(s);
   b. An English translation of the allowable/ patentable claim(s); and
   c. A statement that the English translation is accurate;

(3) Applicant must:
   a. Ensure all the claims in the U.S. application must sufficiently correspond or be amended to sufficiently correspond to the allowable/patentable claim(s) in the KIPO application(s); and
   b. Submit a claims correspondence table in English;

(4) Examination of the U.S. application has not begun;

(5) Applicant must submit a copy of:
   a. All of the Office actions from each of the KIPO application(s) containing the allowable/patentable claim(s) that are the basis for the request;

b. An English language translation of the KIPO Office actions from (5)(a) above; and
c. A statement that the English translation is accurate;

(6) Applicant must submit:
a. An IDS listing the documents cited by the KIPO examiner in the KIPO office action (unless already submitted in this application)
b. Copies of documents except U.S. patents or U.S. patent application publications (unless already submitted in this application); and

(7) The required petition fee under 37 CFR 1.17(h).

The request to participate in the PPH program and petition comply with the above requirements. Accordingly, the above-identified application has been accorded "special" status.

The application is being forwarded to the examiner for action on the merits commensurate with this decision.

Any inquiry regarding this decision should be directed to Blaine Copenheaver, Quality Assurance Specialist, at (571) 272-1156.

All other inquiries concerning the examination or status of the application is accessible in the PAIR system at http://www.uspto.gov/ebc/index.html.

/Blaine Copenheaver/

Blaine Copenheaver
Quality Assurance Specialist
Technology Center 1700

UNITED STATES PATENT AND TRADEMARK OFFICE

UNITED STATES DEPARTMENT OF COMMERCE
United States Patent and Trademark Office
Address: COMMISSIONER FOR PATENTS
P.O. Box 1450
Alexandria, Virginia 22313-1450
www.uspto.gov

ALLERGAN, INC.
2525 DUPONT DRIVE, T2-7H
IRVINE, CA 92612-1599

Mail Date: 04/21/2010

Applicant	: Ken Chow	: DECISION ON REQUEST FOR
Patent Number	: 7598417	: RECALCULATION of PATENT
Issue Date	: 10/06/2009	: TERM ADJUSTMENT IN VIEW
Appliction No	: 12/058,219	: OF WYETH AND NOTICE OF INTENT TO
Filed	: 03/28/2008	: ISSUE CERTIFICATE OF CORRECTION
		:

The Request for Recalculation is **GRANTED** to the extent indicated.

The patent term adjustment has been determined to be **0** days. The USPTO will *sua sponte* issue a certificate of correction reflecting the amount of PTA days determined by the recalculation.

Prior to the issuance of the certificate of correction, the USPTO will afford patentee an opportunity to be heard and request reconsideration. Accordingly, patentee has **one month or thirty (30) days**, whichever is longer, to file a request for reconsideration of this patent term adjustment calculation. See 35 U.S.C. 154(b)(3)(B)(ii) and 37 CFR 1.322(a)(4). No extensions of time will be granted under 37 CFR 1.136.

Patentee should use document code PET.OP if electronically filing a request for reconsideration of this patent term adjustment calculation. The patentee must also include the information required by 37 CFR 1.705(b)(2) and the fee required by 37 CFR 1.18(e). If patentee does not file a timely request for reconsideration of this patent term adjustment calculation including the information required by 37 CFR 1.705(b)(2) and the fee required by 37 CFR 1.18(e), the USPTO will issue a certificate of correction reflecting the PTA determination noted above.

Patentee should be aware that in order to preserve the right to review in the United States District Court for the District of Columbia of the USPTO patent term adjustment determination, patentee must ensure that he or she also take the steps required under 35 U.S.C. 154(b)(4)(A) in a timely manner. Nothing in the request for recalculation should be construed as providing an alternative time frame for commencing a civil action under 35 U.S.C. 154(b)(4)(A).

Any questions concerning this decision should be directed to the Office of Patent Legal Administration at 571-272-7702.

UNITED STATES PATENT AND TRADEMARK OFFICE

Commissioner for Patents
United States Patent and Trademark Office
P.O. Box 1450
Alexandria, VA 22313-1450
www.uspto.gov

AKIN GUMP STRAUSS HAUER & FELD LLP
1111 Louisiana Street
44th Floor
Houston TX 77002

MAILED

NOV 05 2009

OFFICE OF PETITIONS

In re Application of	:	
Aijaz ANWAR et al.	:	
Application No. 12/058,249	:	DECISION ON PETITION
Filed: March 28, 2008	:	
Attorney Docket No. 684356.0003	:	

This is a decision on the petition under the unintentional provisions of 37 CFR 1.137(b), filed September 22, 2009, to revive the above-identified application and the petition under 37 CFR 1.182, filed on November 02, 2009 to expedite the decision.

The petition under 37 CFR 1.137(b) is **GRANTED**.

The petition under 37 CFR 1.182 is **GRANTED**.

This application became abandoned for failure to timely pay the issue and publication fees on or before September 17, 2009, as required by the Notice of Allowance and Fee(s) Due, mailed June 17, 2009. Accordingly, the date of abandonment of this application is September 17, 2009.

The petition satisfies the requirements of 37 CFR 1.137(b) in that petitioner has supplied (1) the reply in the form of payment of the issue fee of $1,510.00 and the publication fee of $300.00, (2) the petition fee of $1,620.00; and (3) a proper statement of unintentional delay.

Telephone inquiries concerning this decision should be directed to Niketa I. Patel at 571-272-4156 or in her absence, the undersigned at 571-272-7099.

The application file is being referred to the Office of Patent Publication.

David A. Bucci
Petitions Examiner
Office of Petitions

UNITED STATES PATENT AND TRADEMARK OFFICE

UNITED STATES DEPARTMENT OF COMMERCE
United States Patent and Trademark Office
Address: COMMISSIONER FOR PATENTS
P.O. Box 1450
Alexandria, Virginia 22313-1450
www.uspto.gov

APPLICATION NO.	FILING DATE	FIRST NAMED INVENTOR	ATTORNEY DOCKET NO.	CONFIRMATION NO.
12/058,256	03/28/2008	Harry Barowski	YOR920080018US1	2788

48150 7590 06/13/2008
MCGINN INTELLECTUAL PROPERTY LAW GROUP, PLLC
8321 OLD COURTHOUSE ROAD
SUITE 200
VIENNA, VA 22182-3817

EXAMINER
CHAN, EDDIE P

ART UNIT	PAPER NUMBER
2183	

MAIL DATE	DELIVERY MODE
06/13/2008	PAPER

Please find below and/or attached an Office communication concerning this application or proceeding.

The time period for reply, if any, is set in the attached communication.

UNITED STATES PATENT AND TRADEMARK OFFICE

Commissioner for Patents
United States Patent and Trademark Office
P.O. Box 1450
Alexandria, VA 22313-1450
www.uspto.gov

MCGINN INTELLECTUAL PROPERTY LAW GROUP, PLLC
8321 OLD COURTHOUSE ROAD
SUITE 200
VIENNA VA 22182-3817

In re Application of: Barowski et al. Serial No.: 12/058256 Filed: March 28, 2008 Docket: YOR920080018US1 Title: METHOD AND SYSTEM FOR DATA DEPENDENT PERFORMANCE INCREMENT AND POWER REDUCTION	DECISION ON PETITION TO MAKE SPECIAL FOR NEW APPLICATION UNDER 37 C.F.R. § 1.102 & M.P.E.P. § 708.02

This is a decision on the petition filed on March 28, 2008 to make the above-identified application special for accelerated examination procedure under 37 C.F.R. § 1.102(d).

The petition to make the application special is **DISMISSED**.

REGULATION AND PRACTICE

A grantable petition to make special under 37 C.F.R. § 1.102(d) and pursuant to the "Change to Practice for Petitions in Patent Applications to Make Special and for Accelerated Examination" published in the Federal Register on June 26, 2006 (71 Fed. Reg. 36323), must satisfy the following conditions:

I. Conditions Regarding the Application:

1. the application must be a non-reissue utility or design application filed under 37 CFR 1.111(a);

2. the application, the petition and the required fees must be filed electronically using the USPTO's electronic filing system (EFS), or EFS-web; if not filed electronically, a statement asserting that EFS and EFS-web were not available during the normal business hours.

3. at the time of filing, the application must be complete under 37 CFR 1.51 and in condition for examination;

4. the application must contain three or fewer independent claims and twenty or fewer total claims and the claims must be directed to a single invention.

II. Conditions Regarding the Petition:

The petition must:

1. be filed with the application;

2. include a statement that applicant agrees not to separately argue the patentability of any independent claim during any appeal in the application;

3. include a statement that applicant agrees to make an election without traverse in a telephone interview.

4. include a statement that applicant agrees to conduct such an interview when requested by the examiner.

5. include a statement, made based on a good faith belief, that a preexamination search in compliance with the following requirements, was conducted, including an identification of the filed of search by United States class and subclass, where applicable, and for database searches, the search logic or chemical structure or sequence used as a query, the name of the file(s) searched and the database service, and the date of the search.

The preexamination search must:

5.1 involve U.S. patents and patent application publications, foreign patent documents, and non-patent literature, unless the applicant can justify with reasonable certainty that no references more pertinent than those already identified are likely to be found in the eliminated sources and includes such a justification with this statement;

5.2. be directed to the claimed invention and encompass all of the features of the claims, giving the claims the broadest reasonable expectation;

5.3. encompass the disclosed features that may be claimed.

6. must provide in support of the petition an accelerated examination support document. An accelerated examination support document must include:

6.1. an information disclosure statement (IDS) in compliance with 37 CFR 1.98 citing each reference deemed most closely related to the subject matter of each of the claims;

6.2. an identification of all the limitations in the claims that are disclosed by the reference specifying where the limitation is disclosed in the cited reference;

6.3. a detailed explanation of how each of the claims are patentable over the references cited with particularity required by 37 CFR 1.111(b) and (c);

6.4. a concise statement of the utility of the invention as defined in each of the independent claims (unless the application is a design application);

6.5. a showing of where each limitation of the claims finds support under 35 USC 112, first paragraph, in the written description of the specification. If applicable, the showing must also identify: (1) each means- (or step) plus-function claim element that invokes consideration under 35 UDC 112, sixth paragraph; and (2) the structure, material, or acts in the specification that corresponds to each means- (or step) plus-function claim element that invokes consideration under 35 UDC 112, sixth paragraph; if the application claims the benefit of one or more applications under title 35, United States Code, the showing must also include where each limitation of the claims finds support under 35 USC 112, first paragraph, in each such application in which such supports exists;

6.6. an identification of any cited references that may be disqualified under 35 USC 103(c).

REVIEW OF FACTS

The conditions I.1 – I.4, II.1 – II.4, II.5, II.5.3, and II.6.6 above are considered to have been met. However, the petition fails to comply with conditions II.5.1 and II.5.2, II.6.1, II.6.2, II.6.3, II.6.4 and II.6.5 above. Therefore, the petition fails to meet the required conditions to be accorded special status under the accelerated examination procedure.

With respect to item **II.5.1 and II.5.2** above, petitioner is required to provide keywords and phrases encompassing limitations of each claim including those deemed by the applicant as patentable features distinguishing the claimed invention from the cited prior art used in any database search. The preexam search must be directed to the (instant) claimed invention and encompass all of the disclosed features of the (instant) claims.

The guidelines for Applicants under the New Accelerated Exam Proc states as follows in Part I item 8 section 2.: A text search of the US patents and published patent applications that covers the subject matter of the independent claims using terms recognized in the art given their broadest reasonable interpretation. The search should consider **individual features by themselves and combinations of features**. The search should cover the **broadest scope encompassed by the claims as well as claims of narrow and intermediate breadth**.

With respect to items 5.1 - 5.2 above, on the class/subclass search, given the total number of patents in all the class/subclasses listed as searched, **Petitioner should clarify if a limited classified search was conducted, and if so, how it was limited. Otherwise, a mere listing of class/subclass will be taken as a representation that all of the documents were reviewed in their entirety.**

Regarding the requirement of MPEP § 708.02(a)(I.)(I)(1) and item **6.1** above, the IDS submitted with the application lists a reference to Buti et al "Organization and implementation of ....IBM POWER4 Processors". However, the AESD does not provide an identification of how the claim limitations are taught by this Buti reference. Nor is there an explanation of how the instant application distinguishes over this Buti reference. Hence the IDS is deemed insufficient. If applicant wishes to cite references that are not required in an AESD for the examiner to consider, applicant may submit such references in a separate information disclosure statement (IDS) in compliance with 37 CFR 1.98. Applicant should clearly identify the IDS of the AESD that is in support of the petition to make special, and applicant should clearly identify the separate IDS containing references not discussed in the accelerated examination support document, and that is not in support of the petition to make special. Consistent with 37 CFR 10.18, any reference submitted in a separate IDS that is not part of an AESD is a representation by applicant to the USPTO that no reference submitted in the separate IDS is deemed closer to the subject matter of at least one claim than the references provided in the AESD. If applicant deems references found after the initial filing to be closer to the subject matter of at least one claim than the references provided in the AESD, then applicant needs to supplement the AESD to account for these references.

Regarding the requirement of MPEP § 708.02(a)(I.)(I)(3) and item **6.2 above**, applicant makes a general discussion of the 5 references cited by applicant in the AESD. Applicant should provide a

claim-by-claim mapping of the pertinent subject matter disclosed in each of the references, specifically identifying each claim limitation and corresponding disclosure within the reference, citing to specific relevant portions of each reference, even if a reference teaches only part of the limitation. Examples can be found on USPTO website, using the link http://www.uspto.gov/web/patents/accelerated/ and clicking on "Sample Accelerated Examination Support Document".

Further, the limitations "
wherein if a bitvector, consisting of the original instruction and the explicit bits, matches a pattern stored in the internal operation code exchange table, the original instruction is replaced by the simplified instruction;" have not been recited to be taught by any of the cited references. However, they are not listed in the "Explanation of patentability" section as being features that distinguish the claimed invention over the cited prior art. Hence it is not clear if the above claim limitations are taught by the cited references or not.

Furthermore, limitations of claims are compared as a whole to the reference. It is not clear if the references teach a portion of the limitation being addressed. **Any reference which teaches any portion of the limitation must be so identified even if the reference does not teach the entirety of the limitation. Petitioner should review all claim limitations, especially those believed to be patentable distinctions from the cited references to ensure that the search covered these concepts, and update the search and/or provide any clarifications.** Examples of a properly documented search are available at
http://www.uspto.gov/web/patents/accelerated/ae_presearch_sample.doc

In addition, petitioner should **review the Identification of Limitations disclosed by References and the Detailed Explanation of Patentability** sections **in view of updated search, and changes and clarifications, and provide clarifications, as necessary, to ensure compliance with the requirement of items 6.2 and 6.3 above.**

Regarding the requirement of MPEP § 708.02(a)(I.)(I) and item II 6.3; the Accelerated Examination Support Document (AESD) does not provide a detailed explanation of how each of the claims are patentable with the particularity required by 37 CFR 1.111(b) and (c). In section 9(C) of the AESD, petitioner asserts that "all of the references" whether considered singularly or in reasonable combination, fail to teach or suggest the identified limitations; thus concluded that the claims are patentably distinguished over the references alone or in combination.

By identifying all limitations as those limitations that the reference(s) do not show or suggest, the petition fails to discuss the claimed limitations with respect to the references in accordance with the requirements of 37 CFR 1.111 (b) and (c). That is, the petition does not specifically properly compare/contrast the claimed invention with respect to the relevant teachings in the prior art in the identified references. A general allegation that "all of the references fail to at least teach ... and therefore patentably distinguish over each of the references alone or in combination" does not comply with the requirements. Petitioner fails clearly point out the patentable novelty which he or she thinks the claims present in view of the state of the art disclosed by the references cited. The Office cannot infer or guess what petitioner believes the

differences between the claims and the teachings of the prior art to be. For these reasons, the petition does not meet the requirement of MPEP § 708.02(a)(I.)(I)(3).

Petitioner is requested to clearly point out claim limitations not taught by any of the references and how the limitations are patentably distinguished over the references cited alone or in combination.

With regard to the requirement of MPEP § 708.02(a)(I.)(I)(4) and item 6.4 above, the concise statement of the utility ***must be of the invention as defined in (each of) the independent claim(s).***

Finally, with respect to the requirement of MPEP § 708.02(a)(I.)(I)(5) and item **6.5** above, the Accelerated Examination Support Document is **required to show where each limitation of the claims finds support under 35 USC 112, first paragraph, in the written description of the specification**. The AESD only identifies paragraph [0004] and Figure 1 to teach all the claim limitations of the only claim, without identifying any claim limitation and corresponding support in the cited portions of the specification/drawing. A review of the paragraph 4 indicates that the description on this paragraph is identical to the claimed language of claim 1; a general statement that all limitations of claim(s) can be found in all of the cited figure and pointing to the specification having a verbatim of the claim language cannot be accepted to satisfy such a requirement of MPEP § 708.02(a)(I.)(I)(5) and item II.6.5 above. **Applicant must identify portions of text in the specification by page and line number, and specific elements of figure instead of referring to the whole figure, for each of the claim limitations, as providing support under 35 U.S.C. 112, First paragraph**. A clarification and identification of support for each limitation of each claim is required.

DECISION

For the above-stated reasons, the petition is **dismissed**. The application will therefore be taken up by the examiner for action in its regular turn.

Petitioner is given a single opportunity to perfect the petition. Any request for reconsideration of this decision must be submitted within 1 (one) month or 30 (thirty) days, whichever is longer, (no extension of time under 37 CFR 1.136(a)) from the date of this decision in order to be considered timely. Any request for reconsideration must address the deficiencies indicated above.

Petitioner is reminded that, upon granting of the special status of the application on request for reconsideration, the application will be processed expeditiously. However, due to the dismissal of the instant petition, examination may not be completed within twelve months of the filing date of the application.

Any inquiry regarding this decision should be directed to Mano Padmanabhan, at (571) 272-4210.

Mano Padmanabhan

Mano Padmanabhan, WQAS Technology Center 2100

UNITED STATES PATENT AND TRADEMARK OFFICE

UNITED STATES DEPARTMENT OF COMMERCE
United States Patent and Trademark Office
Address: COMMISSIONER FOR PATENTS
P.O. Box 1450
Alexandria, Virginia 22313-1450
www.uspto.gov

APPLICATION NO.	FILING DATE	FIRST NAMED INVENTOR	ATTORNEY DOCKET NO.	CONFIRMATION NO.
12/058,256	03/28/2008	Harry Barowski	DE20080018US1	2788

48150 7590 09/30/2008
MCGINN INTELLECTUAL PROPERTY LAW GROUP, PLLC
8321 OLD COURTHOUSE ROAD
SUITE 200
VIENNA, VA 22182-3817

EXAMINER
CHAN, EDDIE P

ART UNIT	PAPER NUMBER
2183	

MAIL DATE	DELIVERY MODE
09/30/2008	PAPER

Please find below and/or attached an Office communication concerning this application or proceeding.

The time period for reply, if any, is set in the attached communication.

UNITED STATES PATENT AND TRADEMARK OFFICE

Commissioner for Patents
United States Patent and Trademark Office
P.O. Box 1450
Alexandria, VA 22313-1450
www.uspto.gov

MCGINN INTELLECTUAL PROPERTY LAW GROUP, PLLC
8321 OLD COURTHOUSE ROAD
SUITE 200
VIENNA VA 22182-3817

In re Application of: Barowski et al. Serial No.: 12/058256 Filed: March 28, 2008 Docket: YOR920080018US1 Title: METHOD AND SYSTEM FOR DATA DEPENDENT PERFORMANCE INCREMENT AND POWER REDUCTION	DECISION ON PETITION TO MAKE SPECIAL FOR NEW APPLICATION UNDER 37 C.F.R. § 1.102 & M.P.E.P. § 708.02

This is a decision on the renewed petition filed on July 14, 2008, to make the above-identified application special for accelerated examination procedure under 37 C.F.R. § 1.102(d). The original petition, submitted on March 28, 2008, was dismissed in the decision mailed on June 13, 2008.

The petition to make the application special is **GRANTED**.

The application is eligible for accelerated examination and the petition complies with the conditions for granting the application special status pursuant to the "Change to Practice for Petitions in Patent Applications to Make Special and for Accelerated Examination" published June 26, 2006, in the Federal Register. (71 Fed. Reg. 36323).

The prosecution of the instant application will be conducted expeditiously according to the following guidelines.

1. The application will be docketed to an examiner and taken up for action within two weeks of the date of this decision.

2. Restriction Practice:
   If the examiner determines that the claims are not directed to a single invention, a telephone request to elect one single invention will be made pursuant to MPEP 812.01. As a prerequisite to the grant of this petition, the applicant has agreed to make an oral election, by telephone, without traverse. If the applicant refuses to make an election without traverse, or the examiner cannot reach the applicant after a reasonable effort, the examiner

will treat the first claimed invention (invention defined by claim 1) as having being constructively elected without traverse for examination.

3. Office action:
If it is determined that, after appropriate consultation, there is a potential rejection or any other issue to be addressed, the examiner will telephone the applicant and arrange an interview to discuss and resolve the issue. An Office action, other than a Notice of Allowance and Fee(s) Due (Notice of Allowance), will not be issued unless either: 1) an interview was conducted but did not result in agreed to action that places the application in condition for allowance, or, 2) a determination is made that an interview would be unlikely to result in the application being placed in condition for allowance, and 3) an internal conference has been held to review any rejection of any claim.

4. Time for Reply:
An Office action other than a Notice of Allowance or a final Office action will set a shortened statutory period of one month or thirty days, whichever is longer, for reply with no extension of time available under 37 CFR 1.136(a). Failure to timely file a reply within this non-extendible period for reply will result in the abandonment of the application.

5. Reply by Applicant:
A timely reply to an Office action other than the Notice of Allowance must be submitted electronically via EFS or EFS-web and limited to addressing the rejections, objections and requirement made. Any amendment that attempts to: 1) add claims which would result in more than three pending independent claims or more than twenty pending total claims; 2) present claims not encompassed by the pre-examination search or an updated accelerated examination support document; or 3) present claims that are directed a non-elected invention or an invention other than that previously claimed and examined in the application, will be treated as not fully responsive and will not be entered.

   For any amendment to the claims (including any new claim) that is not encompassed by the accelerated examination support document, applicant must provide an updated accelerated examination support document that encompasses the amended or new claims at the time of filing of the amendment.

   To proceed expeditiously with the examination, it is recommended that a reply with amendments made to any claim or with any new claim being added be accompanied by an updated accelerated examination support document or a statement explaining how the amended or new claim is supported by the original accelerated examination support document.

6. Information Disclosure Statement (IDS):
Any IDS filed during prosecution must be submitted electronically via EFS or EFS-web, accompanied by an updated accelerated examination support document, and be in compliance with 37 CFR 1.97 and 1.98.

7. Post-Allowance Processing:

To expedite processing of the allowed application into a patent, the applicant must: 1) pay the required fees within one month of the date of the Notice of Allowance, and 2) not file any post allowance papers not required by the Office. In no event may the issue fee be paid and accepted later than three months from the date of the Notice of Allowance.

8. After-Final and Appeal Procedures:
   To expedite prosecution, after receiving the final Office action, applicant must: 1) promptly file a notice of appeal, an appeal brief and appeal fees; and 2) not request a pre-appeal brief conference.

   Any amendment, affidavit or other evidence filed after final Office action must comply with applicable rules and the requirements outlined in numbered paragraphs 5 and 6 above.

   On appeal, the application will proceed according to normal appeal procedures. After appeal, the application will again be treated special.

9. Proceedings Outside the Normal Examination Process:
   If the application becomes involved in a proceeding that is outside the normal examination process (e.g., a secrecy order, national security review, interference proceeding, petitions under 37 CFR 1.181, 182 or 183), the application will be treated special before and after such proceeding.

10. Final Disposition:
    The twelve-month goal of this accelerated examination procedure ends with a final disposition. The mailing of a final Office action, a Notice of Allowance, the filing of a Notice of Appeal, or the filing of a Request for Continued Examination (RCE) is the final disposition.

If, during prosecution, a paper is not filed electronically using EFS-web, a reply is filed but is not fully responsive, the application is involved in an appeal, or a proceeding outside normal examination process, the application will still be examined expeditiously, however, the final disposition may occur more than twelve months from the filing of the application. In addition, Applicant is reminded that due to the dismissal of the previous petition submission, examination may not be completed within twelve months of the filing date of the application.

Any inquiry regarding this decision should be directed to Mano Padmanabhan at (571) 272-4210. If attempts to reach the undersigned by telephone are unsuccessful, Kakali Chaki, Quality Assurance Specialist, can be reached at (571) 272-3719.

/Mano Padmanabhan/

Mano Padmanabhan
WQAS Technology Center 2100
Computer Architecture, Software, and Information Security

UNITED STATES PATENT AND TRADEMARK OFFICE

UNITED STATES DEPARTMENT OF COMMERCE
United States Patent and Trademark Office
Address: COMMISSIONER FOR PATENTS
P.O. Box 1450
Alexandria, Virginia 22313-1450
www.uspto.gov

APPLICATION NO.	FILING DATE	FIRST NAMED INVENTOR	ATTORNEY DOCKET NO.	CONFIRMATION NO.
12/058,290	03/28/2008	Vinicio Bombacino	FR920080027US1	2853

78148 7590 05/21/2008
KING & SPALDING
1180 PEACHTREE ST.
ATLANTA, GA 30309

EXAMINER
CALDWELL, ANDREW T

ART UNIT	PAPER NUMBER
2142	

MAIL DATE	DELIVERY MODE
05/21/2008	PAPER

Please find below and/or attached an Office communication concerning this application or proceeding.

The time period for reply, if any, is set in the attached communication.

UNITED STATES PATENT AND TRADEMARK OFFICE

Commissioner for Patents
United States Patent and Trademark Office
P.O. Box 1450
Alexandria, VA 22313-1450
www.uspto.gov

KING & SPALDING
1180 PEACHTREE ST.
ATLANTA GA 30309

In re Application of: Vinicio BOMBACINO, et al. Serial No.: 12/058290 Filed: Mar 28, 2008 Docket: FR920080027US1 Title: MAIL SERVER RECIPIENT CHECK SPACE	DECISION ON PETITION TO MAKE SPECIAL FOR NEW APPLICATION UNDER 37 C.F.R. § 1.102 & M.P.E.P. § 708.02

This is a decision on the petition filed on Mar 28, 2008 to make the above-identified application special for accelerated examination procedure under 37 C.F.R. § 1.102(d).

The petition to make the application special is **DISMISSED**.

REGULATION AND PRACTICE

A grantable petition to make special under 37 C.F.R. § 1.102(d) and pursuant to the "Change to Practice for Petitions in Patent Applications to Make Special and for Accelerated Examination" published in the Federal Register on June 26, 2006 (71 Fed. Reg. 36323), must satisfy the following conditions:

I. Conditions Regarding the Application:

1. the application must be a non-reissue utility or design application filed under 37 CFR 1.111(a);

2. the application, the petition and the required fees must be filed electronically using the USPTO's electronic filing system (EFS), or EFS-web; if not filed electronically, a statement asserting that EFS and EFS-web were not available during the normal business hours.

3. at the time of filing, the application must be complete under 37 CFR 1.51 and in condition for examination;

4. the application must contain three or fewer independent claims and twenty or fewer total claims and the claims must be directed to a single invention.

II. Conditions Regarding the Petition:

The petition must:

1. be filed with the application;

2. include a statement that applicant agrees not to separately argue the patentability of any independent claim during any appeal in the application;

3. include a statement that applicant agrees to make an election without traverse in a telephone interview.

4. include a statement that applicant agrees to conduct such an interview when requested by the examiner.

5. include a statement, made based on a good faith belief, that a preexamination search in compliance with the following requirements, was conducted, including an identification of the filed of search by United States class and subclass, where applicable, and for database searches, the search logic or chemical structure or sequence used as a query, the name of the file(s) searched and the database service, and the date of the search.

The preexamination search must:

5.1 involve U.S. patents and patent application publications, foreign patent documents, and non-patent literature, unless the applicant can justify with reasonable certainty that no references more pertinent than those already identified are likely to be found in the eliminated sources and includes such a justification with this statement;

5.2. be directed to the claimed invention and encompass all of the features of the claims, giving the claims the broadest reasonable interpretation;

5.3. encompass the disclosed features that may be claimed.

6. must provide in support of the petition an accelerated examination support document. An accelerated examination support document must include:

6.1. an information disclosure statement (IDS) in compliance with 37 CFR 1.98 citing each reference deemed most closely related to the subject matter of each of the claims;

6.2. an identification of all the limitations in the claims that are disclosed by the reference specifying where the limitation is disclosed in the cited reference;

6.3. a detailed explanation of how each of the claims is patentable over the references cited with particularity required by 37 CFR 1.111(b) and (c);

6.4. a concise statement of the utility of the invention as defined in each of the independent claims (unless the application is a design application);

6.5. a showing of where each limitation of the claims finds support under 35 USC 112, first paragraph, in the written description of the specification. If applicable, the showing must also identify: (1) each means- (or step) plus-function claim element that invokes consideration under 35 USC 112, sixth paragraph; and (2) the structure, material, or acts in the specification that corresponds to each means- (or step) plus-function claim element that invokes consideration under 35 USC 112, sixth paragraph; if the application claims the benefit of one or more applications under title 35, United States Code, the showing must also include where each limitation of the claims finds support under 35 USC 112, first paragraph, in each such application in which such supports exists;

6.6. an identification of any cited references that may be disqualified under 35 USC 103(c).

REVIEW OF FACTS

The conditions I.1 to II.4 above are considered to have been met. However, the petition fails to comply with conditions II.5 and II.6 above. Therefore, the petition fails to meet the required conditions to be accorded special status under the accelerated examination procedure.

Regarding item II.5.1 above, for classification searches, MPEP 719.05 states that a *classification search* is defined as a complete search of all the documents in a particular subclass, and it is not limited by any text query or other means. Petitioner should clarify whether the text search logic used was utilized in combination with the identified field of search (***709/226, 232***) or separate therefrom (i.e. the identified classes and subclasses were searched in their entirety); and if they were combined, the specific search logic combination. Clarification/correction required.

Regarding the requirement of MPEP § 708.02(a)(I.)(H) and items II.5.2 and II5.3 above, the pre-examination search must involve U.S. patents and patent application publications, foreign patent documents, and non-patent literature and the pre-examination search must be directed to the (instant) claimed invention and encompass all of the features of the claims, giving the claim the broadest reasonable interpretation. The search logic does not seems to include the inventive concept or features included in the in the claim language that covers the subject matter of the claims using terms recognized in the art given their broadest reasonable interpretation. The search should consider individual features by themselves and combinations of features. The search should cover the **broadest scope** encompassed by the claims **as well as** claims of **narrow and intermediate breadth**.

The petitioner indicates that the cited references do not disclose the features of:

1) creating a fake e-mail containing size information relating to the size of the original e-mail

2) transmitting the fake e-mail

3) determining whether an intended recipient has the capacity to receive the original e-mail by using said size information and recipient's quota

However, it is noted that no search terms related to the concepts cited above is found in the search logic. The Petitioner is advised to review the all claim limitations, especially those asserted as patentable distinctions from the cited references to ensure the preexamination search covers these concepts, and update the search and/or provide any clarification if deemed necessary.

Regarding the requirement of MPEP § 708.02(a)(I.)(I)(2) and item 6.2 above, the Discussion in Section 9(B) of the Accelerated Examination Support Document does not provide a detailed explanation of how each of the claim features is disclosed by the reference (i.e. correlate the limitation to the portion of reference which best characterizes the limitation by page, line, and corresponding element in the figures). Petitioner is required to provide a detail discussion of the pertinent subject matter disclosed in each of the references, specifically identifying *each claim*

limitation and *corresponding disclosure* within the reference, ***citing to specific relevant portions of each reference by way of figure, page, paragraph and line numbers,*** as appropriate . Correction is required.

Regarding the requirement of MPEP § 708.02(a)(I.)(I)(3) and item 6.3 above, in section 9(C) of the Accelerated Examination Support Document (AESD), petitioner states that because "*all of references*" fail to teach or suggest the identified limitations and therefore claim 1 is seen to be "patentably distinguished over each of these references alone or in combination". However, since the alleged patentable features do not appear to have been searched, the petitioner is reminded to update sections 9 (B) and 9 (C) of the AESD with respect to any additional references resulted from the updated search to properly compare/contrast the claimed invention with respect to the relevant teachings in the prior art in the identified references alone or in combination with the particularity required by 37 CFR 1.111(b) and (c) as required by MPEP § 708.02.

Regarding to the requirement of MPEP § 708.02(a)(I.)(I)(5) and item II.6.5 above, the Accelerated Examination Support Document identifies at least in Figs 2-4, and paragraphs [0014]-[0021] of the instant specification as providing support for the sole claim 1. However, the requirement of MPEP § 708.02(a)(I.)(I)(5) and item II.6.5 above clearly states that the petitioner is required to **specifically identify what corresponding elements in the figures** and **specifically identify where the corresponding written description in the cited portions of the instant specification** can find support under 35 U.S.C. § 112, first paragraph **for each limitation of the claim 1**. It is pointed out that the written description requirement has several policy objectives. The essential goal of the description of the invention requirement is to clearly convey the information that an applicant has invented the subject matter which is claimed. Another objective is to put the examiner in possession of what the applicant claims as the invention – the written description requirement implements the principle that a patent application must describe the technology that is sought to be patented; the requirement serves both to satisfy the inventor's obligation to disclose the technologic knowledge upon which the application is based and to demonstrate that the applicants were in possession of the invention that is claimed. Further, the written description requirement promotes the progress of expedite examination by ensuring that applicants adequately describe their inventions in sufficient detail in their applications in exchange for the right to take-up out of order of examination.

Thus, a general statement that all limitations of claim(s) can be found in at least figures 2-4 and large portion of the specification cannot be accepted to satisfy such a requirement of MPEP § 708.02(a)(I.)(I)(5) and item II.6.5 above. Petitioner is required to identify each claim limitations and the corresponding support in the cited portions ***(page, line, and corresponding element in the figures)*** where the instant claim language finds corresponding support.

DECISION

For the above-stated reasons, the petition is **DISMISSED**. The application will therefore be taken up by the examiner for action in its regular turn.

Petitioner is given a single opportunity to perfect the petition. Any request for reconsideration of this decision must be submitted within 1 (one) month or 30 (thirty) days, whichever is longer, (no extension of time under 37 CFR 1.136(a)) from the date of this decision in order to be considered timely. Any request for reconsideration must address the deficiencies indicated above.

Petitioner is reminded that, upon granting of the special status of the application on request for reconsideration, the application will be processed expeditiously. However, due to the dismissal of the instant petition, examination may not be completed within twelve months of the filing date of the application.

Any inquiry regarding this decision should be directed the undersigned whose telephone number is (571) 272-4147.

If attempts to reach the undersigned by telephone are unsuccessful, Tod Swann, Quality Assurance Specialist, can be reached at (571) 272-3612.

Kim Huynh,
Quality Assurance Specialist
Technology Center 2100
Computer Architecture, Software and Information Security

UNITED STATES PATENT AND TRADEMARK OFFICE

UNITED STATES DEPARTMENT OF COMMERCE
United States Patent and Trademark Office
Address: COMMISSIONER FOR PATENTS
P.O. Box 1450
Alexandria, Virginia 22313-1450
www.uspto.gov

APPLICATION NO.	FILING DATE	FIRST NAMED INVENTOR	ATTORNEY DOCKET NO.	CONFIRMATION NO.
12/058,290	03/28/2008	Vinicio Bombacino	FR920080027US1 (105072)	2853

78148 7590 10/01/2008
KING & SPALDING
1180 PEACHTREE ST.
ATLANTA, GA 30309

EXAMINER
CALDWELL, ANDREW T

ART UNIT	PAPER NUMBER
2142	

MAIL DATE	DELIVERY MODE
10/01/2008	PAPER

Please find below and/or attached an Office communication concerning this application or proceeding.

The time period for reply, if any, is set in the attached communication.

UNITED STATES PATENT AND TRADEMARK OFFICE

Commissioner for Patents
United States Patent and Trademark Office
P.O. Box 1450
Alexandria, VA 22313-1450
www.uspto.gov

KING & SPALDING
1180 PEACHTREE ST.
ATLANTA GA 30309

In re Application of: Vinicio BOMBACINO, et al. Serial No.: 12/058290 Filed: Mar 28, 2008 Docket: FR920080027US1 Title: MAIL SERVER RECIPIENT CHECK SPACE	DECISION ON PETITION TO MAKE SPECIAL FOR NEW APPLICATION UNDER 37 C.F.R. § 1.102 & M.P.E.P. § 708.02

This is a decision on the renewed petition filed on June 13, 2008 to make the above-identified application special for accelerated examination procedure under 37 C.F.R. § 1.102(d). The original petition, submitted on Mar 28, 2008 was dismissed in the decision mailed on May 21, 2008.

The renewed petition adequately addresses all the concerns raised in the dismissal, the petition to make the application special is **GRANTED**.

The application is eligible for accelerated examination and the petition complies with the conditions for granting the application special status pursuant to the "Change to Practice for Petitions in Patent Applications to Make Special and for Accelerated Examination" published June 26, 2006, in the Federal Register. (71 Fed. Reg. 36323).

The prosecution of the instant application will be conducted expeditiously according to the following guidelines.

1. The application will be docketed to an examiner and taken up for action within two weeks of the date of this decision.

2. Restriction Practice:
   If the examiner determines that the claims are not directed to a single invention, a telephone request to elect one single invention will be made pursuant to MPEP 812.01. As a prerequisite to the grant of this petition, the applicant has agreed to make an oral election, by telephone, without traverse. If the applicant refuses to make an election without traverse, or the examiner cannot reach the applicant after a reasonable effort, the

examiner will treat the first claimed invention (invention defined by claim 1) as having being constructively elected without traverse for examination.

3. Office action:
If it is determined that, after appropriate consultation, there is a potential rejection or any other issue to be addressed, the examiner will telephone the applicant and arrange an interview to discuss and resolve the issue. An Office action, other than a Notice of Allowance and Fee(s) Due (Notice of Allowance), will not be issued unless either: 1) an interview was conducted but did not result in agreed to action that places the application in condition for allowance, or, 2) a determination is made that an interview would be unlikely to result in the application being placed in condition for allowance, and 3) an internal conference has been held to review any rejection of any claim.

4. Time for Reply:
An Office action other than a Notice of Allowance or a final Office action will set a shortened statutory period of one month or thirty days, whichever is longer, for reply with no extension of time available under 37 CFR 1.136(a). Failure to timely file a reply within this non-extendible period for reply will result in the abandonment of the application.

5. Reply by Applicant:
A timely reply to an Office action other than the Notice of Allowance must be submitted electronically via EFS or EFS-web and limited to addressing the rejections, objections and requirement made. Any amendment that attempts to: 1) add claims which would result in more than three pending independent claims or more than twenty pending total claims; 2) present claims not encompassed by the pre-examination search or an updated accelerated examination support document; or 3) present claims that are directed a non-elected invention or an invention other than that previously claimed and examined in the application, will be treated as not fully responsive and will not be entered.

   For any amendment to the claims (including any new claim) that is not encompassed by the accelerated examination support document, applicant must provide an updated accelerated examination support document that encompasses the amended or new claims at the time of filing of the amendment.

   To proceed expeditiously with the examination, it is recommended that a reply with amendments made to any claim or with any new claim being added be accompanied by an updated accelerated examination support document or a statement explaining how the amended or new claim is supported by the original accelerated examination support document.

6. Information Disclosure Statement (IDS):
Any IDS filed during prosecution must be submitted electronically via EFS or EFS-web, accompanied by an updated accelerated examination support document, and be in compliance with 37 CFR 1.97 and 1.98.

7. Post-Allowance Processing:
   To expedite processing of the allowed application into a patent, the applicant must: 1) pay the required fees within one month of the date of the Notice of Allowance, and 2) not file any post allowance papers not required by the Office. In no event may the issue fee be paid and accepted later than three months from the date of the Notice of Allowance.

8. After-Final and Appeal Procedures:
   To expedite prosecution, after receiving the final Office action, applicant must: 1) promptly file a notice of appeal, an appeal brief and appeal fees; and 2) not request a pre-appeal brief conference.

   Any amendment, affidavit or other evidence filed after final Office action must comply with applicable rules and the requirements outlined in numbered paragraphs 5 and 6 above.

   On appeal, the application will proceed according to normal appeal procedures. After appeal, the application will again be treated special.

9. Proceedings Outside the Normal Examination Process:
   If the application becomes involved in a proceeding that is outside the normal examination process (e.g., a secrecy order, national security review, interference proceeding, petitions under 37 CFR 1.181, 182 or 183), the application will be treated special before and after such proceeding.

10. Final Disposition:
    The twelve-month goal of this accelerated examination procedure ends with a final disposition. The mailing of a final Office action, a Notice of Allowance, the filing of a Notice of Appeal, or the filing of a Request for Continued Examination (RCE) is the final disposition.

If, during prosecution, a paper is not filed electronically using EFS-web, a reply is filed but is not fully responsive, the application is involved in an appeal, or a proceeding outside normal examination process, the application will still be examined expeditiously, however, the final disposition may occur more than twelve months from the filing of the application. In addition, Applicant is reminded that due to the dismissal of the previous petition submission, examination may not be completed within twelve months of the filing date of the application.

Any inquiry regarding this decision should be directed the undersigned whose telephone number is (571) 272-4147.

If attempts to reach the undersigned by telephone are unsuccessful, Tod Swann, Quality Assurance Specialist, can be reached at (571) 272-3612.

/Kim Huynh/

Kim Huynh,
Quality Assurance Specialist
Technology Center 2100
Computer Architecture, Software and Information Security

UNITED STATES PATENT AND TRADEMARK OFFICE

Commissioner for Patents
United States Patent and Trademark Office
P.O. Box 1450
Alexandria, VA 22313-1450
www.uspto.gov

SMITH IP SERVICES, P.C.
P.O. Box 997
Rockwall TX 75087

COPY MAILED

AUG 07 2008

In re Application of	:	
THEMIG, DANIEL JON	:	DECISION ACCORDING STATUS
Application No. 12/058,337	:	UNDER 37 CFR 1.47(b)
Filed: 03/28/2008	:	
Attorney Docket No. 2008-IP-010158 U1 US	:	
Title: HYDRAULIC OPEN HOLE PACKER	:	

This is in response to the petition under 37 CFR 1.47(b), filed May 2, 2008.

The petition is **granted**.

Applicant showed that the non-signing inventor refused to execute the application papers after applicant provided him with a copy of the application and declaration for his signature. Applicant established that it has a proprietary interest in the above-identified application by way of an assignment recorded in the USPTO. Applicant asserted that the filing was necessary to preserve the rights of the parties and prevent irreparable damage. Lastly, applicant provided the Office with the last known address of the inventor, an acceptable declaration and the requisite fees.

The Office has reviewed this application and paper and have found them in compliance with 37 CFR 1.47(b). This application is hereby accorded Rule 1.47(b) status. As provided in Rule 1.47(c), this Office will forward notice of this application's filing to the non-signing inventor at the addresses given in the petition. Notice of the filing of this application will also be published in the Official Gazette.

This matter is being referred to the Office of Patent Application Processing for pre-examination processing.

Telephone inquiries related to this decision should be directed to the undersigned at (571) 272-3211.

C. T. Donnell

Christina Tartera Donnell
Senior Petitions Attorney
Office of Petitions

UNITED STATES PATENT AND TRADEMARK OFFICE

Commissioner for Patents
United States Patent and Trademark Office
P.O. Box 1450
Alexandria, VA 22313-1450
www.uspto.gov

Daniel Jon Themig
52 Glenhill Drive
Cochrane, Alberta T4C 1G9
CANADA

COPY MAILED

AUG 07 2008

In re Application of	:	
THEMIG, DANIEL JON	:	
Application No. 12/058,337	:	LETTER
Filed: 03/28/2008	:	
Attorney Docket No. 2008-IP-010158 U1 US	:	
Title: HYDRAULIC OPEN HOLE PACKER	:	

Dear Mr. Themig:

You are named as the sole inventor in the above-identified United States patent application, filed under the provisions of 35 U.S.C. 116 (United States Code), and 37 CFR 1.47(b), Rules of Practice in Patent Cases. Should a patent be granted on the application you will be designated therein as the sole inventor.

As a named inventor you are entitled to inspect any paper in the file wrapper of the application, order copies of all or any part thereof (at a prepaid cost per 37 CFR 1.19) or make your position of record in the application. Alternatively, you may arrange to do any of the preceding through a registered patent attorney or agent presenting written authorization from you. If you care to join the application, counsel of record (see below) would presumably assist you. Joining the application would entail the filing of an appropriate oath or declaration by you pursuant to 37 CFR 1.63.

Requests for information regarding your application should be directed to the File Information Unit at (703) 308-2733. Information regarding how to pay for and order a copy of the application, or a specific paper in the application should be directed to the Certification Division at (571) 272-3150 or (800) 972-6382 (outside the Washington, DC area).

C. T. Donnell

Christina Tartera Donnell
Senior Petitions Attorney
Office of Petitions

SMITH IP SERVICES, P.C.
P.O. Box 997
Rockwall TX 75087

UNITED STATES PATENT AND TRADEMARK OFFICE

Commissioner for Patents
United States Patent and Trademark Office
P.O. Box 1450
Alexandria, VA 22313-1450
www.uspto.gov

August 27, 2009

Marlin R. Smith
P.O. Box 997
Rockwall, TX 75087

Patent No.: 7,571,765 B2
Application No.: 12/058,337
Inventor (s): Daniel Jon Themig
Issued: August 11, 2009
Title: **HYDRAULIC OPEN HOLE PACKER**

Re: Request for Certificate of Correction

Consideration has been given your request for the issuance of a certificate of correction for the above-identified patent under the provisions of Rule(s) 1.322 and/or 1.323.

Assignees' names and addresses (assignment data) printed in a patent, are based *solely* on information supplied in the appropriate space for identifying the assignment data, i.e., item 3 of the Issue Fee Transmittal Form PTOL-85B. Granting of a request under 37 CFR 3.81(b) is required to correct applicant's error providing ***incorrect or erroneous*** assignment data, *before* issuance of a Certificate of Correction, under 37 CFR 1.323 *(see Manual of Patent Examining Procedures (M.P.E.P) Chp.1400, sect. 1481).* This procedure is required *at any time after the issue fee is paid*, including after issuance of the patent.

In view of the foregoing, your request, in this matter, is hereby denied.

A request to correct the Assignee under 37 CFR 3.81(b) should include:

A. **the processing fee set forth in 37 CFR 1.117(h) (currently $130);**
B. a statement that the failure to include the correct assignee name on the PTOL-85B was inadvertent; and
C. a copy of the Notice of Recordation of Assignment Document, reflecting the reel and frame number where the assignment(s) is recorded and/or reflecting proof of *the date* the assignment was submitted for recordation.

In the Request, Applicant(s) may request that the file be forwarded to Certificates of Correction Branch, for issuance of a Certificate of Correction, if the Request is granted.

Any request under 37 CFR 3.81(b) should be directed to the following address or facsimile number:

By mail:	Mail Stop PETITIONS Commissioner for Patents Post Office Box 1450 Alexandria, VA 22313-1450
By hand:	Customer Service Window Mail Stop Petitions Randolph Building 401 Dulany Street Alexandria, VA 22314
By fax:	(571) 273-0025 ATTN: Office of Petitions

If a fee (currently $100) was previously submitted for consideration of a Request for Certificate of Correction, under CFR 1.323, to correct assignment data, no additional fee is required.

/Virginia Tolbert/
Virginia Tolbert
For Mary Diggs, Supervisor
Decisions & Certificate of Correction Branch
(703) 756-1591

vt

UNITED STATES PATENT AND TRADEMARK OFFICE

Commissioner for Patents
United States Patent and Trademark Office
P.O. Box 1450
Alexandria, VA 22313-1450
www.uspto.gov

Fitch, Even, Tabin & Flannery
120 South LaSalle Street
Suite 1600
Chicago, IL 60603-3406

MAILED

MAR 03 2010

OFFICE OF PETITIONS

In re Application of	:	
John Lorne Campbell Seybold et al.	:	
Application No. 12/058,342	:	DECISION ON PETITION
Filed: March 28, 2008	:	TO WITHDRAW
Attorney Docket No. GUIDP012	:	FROM RECORD
	:	

This is a decision on the Request to Withdraw as attorney or agent of record under 37 C.F.R. § 1.36(b), filed December 23, 2009.

The request is **NOT APPROVED.**

The Office will no longer accept address changes to a new practitioner or law firm filed with a Request, absent the filing of a power of attorney to the new representative. The Office will either change the correspondence address of record to the most current address information provided for the assignee of the entire interest who properly became of record under 37 CFR 3.71 or, if no assignee of the entire interest has properly been made of record under 37 CFR 3.71, the most current address information provided for the first named inventor. This change has been made in order to avoid subsequent correspondence being directed to an incorrect address or to a practitioner who has not been appointed as practitioner of record by the applicant.

Accordingly, the request to withdraw from record cannot be approved because the change of correspondence address is not that of : (1) the first named inventor; or (2) an assignee of the entire interest under 37 C.F.R 3.71, who has properly intervened. The file record indicates that an assignment had been filed with the Assignment Branch. In order to update the application, a copy of the actual assignment and/or a Statement under 37 CFR 3.73(b) must be submitted with any renewed request.

All future communications from the Office will continue to be directed to the above-identified address until otherwise properly notified.

Telephone inquiries concerning this decision should be directed to the undersigned at 571-272-4618.

/Kimberly Inabinet/

Kimberly Inabinet
Petitions Examiner
Office of Petitions

cc: Van Pelt, Y & James, LLP
10050 N. Foothill Boulevard
#200
Cupertino, CA 95014

UNITED STATES PATENT AND TRADEMARK OFFICE

Commissioner for Patents
United States Patent and Trademark Office
P.O. Box 1450
Alexandria, VA 22313-1450
www.uspto.gov

DAVIS WRIGHT TREMAINE LLP -
SAN FRANCISCO
505 MONTGOMERY STREET
SUITE 800
SAN FRANCISCO CA 94111

MAILED

MAY 26 2009

OFFICE OF PETITIONS

In re Application of	:	
Essam Enan	:	DECISION ON PETITION
Application No. 12/058,402	:	
Filed: March 28, 2008	:	
Attorney Docket No. **40000213-0200-054**	:	

This is a decision on the petition under 37 CFR 1.57(a), filed March 16, 2009, requesting that the above-referenced application be accorded a filing date of March 28, 2008 with a complete set of formal drawings.

On March 28, 2008, applicants filed the above-identified application. On January 16, 2009, the Office of Data Management mailed a Notice to File Corrected Application Papers which also noted that while the application had been accorded a filing date of March 28, 2008, Figure(s) 31a-b,32a-b and 33a-b, as described in the specification, appeared to have been omitted.

In response thereof, the instant petition and a complete set of drawings, including Figure(s) 31a-b,32a-b and 33a-b, previously omitted from the original application papers filed March 28, 2008, were filed. Applicants state that the present application claims the benefit of non-provisional application 10/832,022 filed April 26, 2004, and that a proper priority claim was timely filed.

37 CFR 1.57(a) provides:

> [I]f all or a portion of the specification or drawing(s) is inadvertently omitted from an application, but the application contains a claim under 37 CFR 1.55 for priority of a prior-filed foreign application, or a claim under 37 CFR 1.78 for the benefit of a prior-filed provisional, nonprovisional, or international application, that was present on the filing date of the application, and the inadvertently omitted portion of the specification or drawing(s) is completely contained in the prior-filed application, the claim for priority or benefit shall be considered an incorporation by reference of the prior-filed application as to the inadvertently omitted portion of the specification or drawings. MPEP 201.17.

Therefore, if an application, as originally filed on or after September 21, 2004, does not include an explicit incorporation by reference statement in the specification, and is entitled to a filing date despite the inadvertent omission of a portion of the prior filed application(s), an applicant may be permitted to add the omitted material by filing an amendment under 37 CFR 1.57(a) within the time period set by the Office. See 37 CFR 1.57(a)(1) and MPEP 201.06(c)(IV).

A review of the record indicates that the above-identified application as originally filed on March 28, 2008 did in fact include an explicit incorporation by reference statement in the specification.

The inclusion of an incorporation by reference of the prior filed application(s) will permit an applicant to amend the continuing application to include any subject matter in such prior application(s), without the need for a petition. See MPEP 201.06(c). A review of the application-as-filed reveals that the specification, filed concurrently with the instant application, contained such a statement.

Obviously, in view of the incorporation by reference, Figure(s) 31a-b,32a-b and 33a-b as described in the specification is not new matter if it was a part of the disclosure of the prior filed non-provisional application.

Accordingly, the petition is **DISMISSED**.

The petition fee in the amount of $400.00 will be refunded to deposit account no. 04-0258.

This application is being forwarded to the Office of Patent Application Processing (OPAP) for further processing with a filing date of March 28, 2008, using the application papers received in the Office on that date and with an indication in Office records that Figure(s) 31a-b,32a-b and 33a-b as described in the specification while not included with the application papers upon filing, were a part of the original disclosure.

Telephone inquiries concerning this matter should be directed to Senior Petitions Attorney Patricia Faison-Ball at (571) 272-3212.

Anthony Knight
Supervisor
Office of Petitions

PTO/SB/130 (03-08)
Approved for use through 03/31/2008. OMB 0651- 0031
U.S. Patent and Trademark Office; U.S. DEPARTMENT OF COMMERCE
Under the Paperwork Reduction Act of 1995, no persons are required to respond to a collection of information unless it contains a valid OMB control number

PETITION TO MAKE SPECIAL BASED ON AGE FOR ADVANCEMENT OF EXAMINATION UNDER 37 CFR 1.102(c)(1)

Application Information

Application Number	12058405	Confirmation Number	3073	Filing Date	2008-03-28
Attorney Docket Number (optional)	08-MAN/102 CIP	Art Unit	1797	Examiner	not yet assigned
First Named Inventor	Manno, Joseph J.				
Title of Invention	CEMENT SLURRY COLLECTION CHUTE BASIN				

Attention: Office of Petitions

An application may be made special for advancement of examination upon filing of a petition showing that the applicant is 65 years of age, or more. No fee is required with such a petition. See 37 CFR 1.102(c)(1) and MPEP 708.02 (IV).

APPLICANT HEREBY PETITIONS TO MAKE SPECIAL FOR ADVANCEMENT OF EXAMINATION IN THIS APPLICATION UNDER 37 CFR 1.102(c)(1) and MPEP 708.02 (IV) ON THE BASIS OF THE APPLICANT'S AGE.

A grantable petition requires one of the following items:
(1) Statement by one named inventor in the application that he/she is 65 years of age, or more; or
(2) Certification by a registered attorney/agent having evidence such as a birth certificate, passport, driver's license, etc. showing one named inventor in the application is 65 years of age, or more.

Name of Inventor who is 65 years of age, or older

Given Name	Middle Name	Family Name	Suffix
Joseph	J.	Manno	

A signature of the applicant or representative is required in accordance with 37 CFR 1.33 and 10.18.
Please see 37 CFR 1.4(d) for the format of the signature.

Select (1) or (2) :

○ (1) I am an inventor in this application and I am 65 years of age, or more.

◉ (2) I am an attorney or agent registered to practice before the Patent and Trademark Office, and I certify that I am in possession of evidence, and will retain such in the application file record, showing that the inventor listed above is 65 years of age, or more.

Signature	/Richard D. Clarke/	Date (YYYY-MM-DD)	2008-04-01
Name	Richard D. Clarke	Registration Number	38846

PTO/SB/130 (03-08)
Approved for use through 03/31/2008. OMB 0651- 0031
U.S. Patent and Trademark Office; U.S. DEPARTMENT OF COMMERCE
Under the Paperwork Reduction Act of 1995, no persons are required to respond to a collection of information unless it contains a valid OMB control number

Privacy Act Statement

The Privacy Act of 1974 (P.L. 93-579) requires that you be given certain information in connection with your submission of the attached form related to a patent application or patent. Accordingly, pursuant to the requirements of the Act, please be advised that: (1) the general authority for the collection of this information is 35 U.S.C. 2(b)(2); (2) furnishing of the information solicited is voluntary; and (3) the principal purpose for which the information is used by the U.S. Patent and Trademark Office is to process and/or examine your submission related to a patent application or patent. If you do not furnish the requested information, the U.S. Patent and Trademark Office may not be able to process and/or examine your submission, which may result in termination of proceedings or abandonment of the application or expiration of the patent.

The information provided by you in this form will be subject to the following routine uses:

1. The information on this form will be treated confidentially to the extent allowed under the Freedom of Information Act (5 U.S.C. 552) and the Privacy Act (5 U.S.C. 552a). Records from this system of records may be disclosed to the Department of Justice to determine whether the Fr eedom of Information Act requires disclosure of these records.

2. A record from this system of records may be disclosed, as a routine use, in the course of presenting evidence to a court, magistrate, or administrative tribunal, including disclosures to opposing counsel in the course of settlement negotiations.

3. A record in this system of records may be disclosed, as a routine use, to a Member of Congress submitting a request involving an individual, to whom the record pertains, when the individual has requested assistance from the Member with respect to the subject matter of the record.

4. A record in this system of records may be disclosed, as a routine use, to a contractor of the Agency having need for the information in order to perform a contract. Recipients of information shall be required to comply with the requirements of the Privacy Act of 1974, as amended, pursuant to 5 U.S.C. 552a(m).

5. A record related to an International Application filed under the Patent Cooperation Treaty in this system of records may be disclosed, as a routine use, to the International Bureau of the World Intellectual Property Organization, pursuant to the Patent Cooperation Treaty.

6. A record in this system of records may be disclosed, as a routine use, to another federal agency for purposes of National Security review (35 U.S.C. 181) and for review pursuant to the Atomic Energy Act (42 U.S.C. 218(c)).

7. A record from this system of records may be disclosed, as a routine use, to the Administrator, General Services, or his/her designee, during an inspection of records conducted by GSA as part of that agency's responsibility to recommend improvements in records management practices and programs, under authority of 44 U.S.C. 2904 and 2906. Such disclosure shall be made in accordance with the GSA regulations governing inspection of records for this purpose, and any other relevant (i.e., GSA or Commerce) directive. Such disclosure shall not be used to make determinations about indivi duals.

8. A record from this system of records may be disclosed, as a routine use, to the public after either publication of the application pursuant to 35 U.S.C. 122(b) or issuance of a patent pursuant to 35 U.S.C. 151. Further, a record may be disclosed, subject to the limitations of 37 CFR 1.14, as a routine use, to the public if the record was filed in an application which became abandoned or in which the proceedings were terminated and which application is referenced by either a published application, an application open to public inspections or an issued patent.

9. A record from this system of records may be disclosed, as a routine use, to a Federal, State, or local law enforcement agency, if the USPTO becomes aware of a violation or potential violation of law or regulation.

UNITED STATES PATENT AND TRADEMARK OFFICE

Commissioner for Patents
United States Patent and Trademark Office
P.O. Box 1450
Alexandria, VA 22313-1450
www.uspto.gov

In re Application of
Joseph J. Manno

Application No. 12058405

Filed:

Attorney Docket No. 08-MAN/102 CIP

:DECISION ON PETITION TO MAKE SPECIAL
:UNDER 37 CFR 1.102(c)(1)

This is a decision on the electronic petition under 37 CFR 1.102 (c)(1) ,filed 02-APR-2008 to make the above-identified application special based on applicant's age as set forth in MPEP § 708.02, Section IV.

The petition is **GRANTED**.

A grantable petition to make an application special under 37 CFR 1.102(c)(1), MPEP § 708.02, Section IV: Applicant's Age must include a statement by applicant or a registered practitioner having evidence that applicant is at least 65 years of age. No fee is required.

Accordingly, the above-identified application has been accorded “special” status and will be taken up for action by the examiner upon the completion of all pre-examination processing.

Telephone inquires concerning this electronic decision should be directed to the Electronic Business Center at 866-217-9197.

All other inquires concerning either the examination or status of the application should be directed to the Technology Center.

UNITED STATES PATENT AND TRADEMARK OFFICE

Commissioner for Patents
United States Patent and Trademark Office
P.O. Box 1450
Alexandria, VA 22313-1450
www.uspto.gov

DICKINSON WRIGHT, PLLC
1875 EYE STREET, NW
SUITE 1200
WASHINGTON, DC 20006

MAILED

JUL 08 2010

OFFICE OF PETITIONS

In re Application of
Joachim Charzinski, et al.
Application No. 12/058,415
Filed: March 28, 2008
Attorney Docket No. 39090-7

DECISION ON PETITION
TO WITHDRAW
FROM RECORD

This is a decision on the Request to Withdraw as attorney or agent of record under 37 C.F.R. § 1.36(b), filed May 27, 2010

The request is **DISMISSED** as moot.

A review of the file record indicates that the power of attorney to Dickinson Wright, PLLC has been revoked by the assignee of the patent application on June 10, 2010. Accordingly, the request to withdraw under 37 C.F.R. § 1.36(b) is moot.

All future communications from the Office will continue to be directed to the below-listed address until otherwise notified by applicant.

Telephone inquires concerning this decision should be directed to undersigned at 571-272-1642. All other inquiries concerning the examination or status of this application should be directed to the Technology Center.

/AMW/
April M. Wise
Petitions Examiner
Office of Petitions

cc: NOKIA SIEMENS NETWORKS GMBH & CO. KG
CTO RTP IPR/PATENT ADMINISTRATION
MUNICH 80240 GERMANY

UNITED STATES PATENT AND TRADEMARK OFFICE

UNITED STATES DEPARTMENT OF COMMERCE
United States Patent and Trademark Office
Address: COMMISSIONER FOR PATENTS
P.O. Box 1450
Alexandria, Virginia 22313-1450
www.uspto.gov

APPLICATION NUMBER	FILING OR 371(C) DATE	FIRST NAMED APPLICANT	ATTY. DOCKET NO./TITLE
12/058,415	03/28/2008	Joachim Charzinski	39090-7

CONFIRMATION NO. 3087

POWER OF ATTORNEY NOTICE

87133
Dickinson Wright, PLLC
1875 Eye Street, NW
Suite 1200
Washington, DC 20006

OC000000042422664

Date Mailed: 07/06/2010

NOTICE REGARDING CHANGE OF POWER OF ATTORNEY

This is in response to the Power of Attorney filed 06/10/2010.

- The Power of Attorney to you in this application has been revoked by the assignee who has intervened as provided by 37 CFR 3.71. Future correspondence will be mailed to the new address of record(37 CFR 1.33).

/amwise/

Office of Data Management, Application Assistance Unit (571) 272-4000, or (571) 272-4200, or 1-888-786-0101

UNITED STATES PATENT AND TRADEMARK OFFICE

UNITED STATES DEPARTMENT OF COMMERCE
United States Patent and Trademark Office
Address: COMMISSIONER FOR PATENTS
P.O. Box 1450
Alexandria, Virginia 22313-1450
www.uspto.gov

APPLICATION NO.	FILING DATE	FIRST NAMED INVENTOR	ATTORNEY DOCKET NO.	CONFIRMATION NO.
12/058,468	03/28/2008	George M. Blue	GB920080047US1 (105084)	3197

78148 7590 10/06/2008
KING & SPALDING
1180 PEACHTREE ST.
ATLANTA, GA 30309

EXAMINER
BASHORE, WILLIAM L

ART UNIT	PAPER NUMBER
2175	

MAIL DATE	DELIVERY MODE
10/06/2008	PAPER

Please find below and/or attached an Office communication concerning this application or proceeding.

The time period for reply, if any, is set in the attached communication.

UNITED STATES PATENT AND TRADEMARK OFFICE

Commissioner for Patents
United States Patent and Trademark Office
P.O. Box 1450
Alexandria, VA 22313-1450
www.uspto.gov

KING & SPALDING
1180 PEACHTREE ST.
ATLANTA GA 30309

In re Application of: George Blue Serial No.: 12/058468 Filed: March 28, 2008 Docket: : GB920080047US1 (105084) Title: COMMAND LINE COMPLETION USING INVOKED COMMAND	DECISION ON PETITION TO MAKE SPECIAL FOR NEW APPLICATION UNDER 37 C.F.R. § 1.102 & M.P.E.P. § 708.02

This is a decision on the petition filed on March 28, 2008 to make the above-identified application special for accelerated examination procedure under 37 C.F.R. § 1.102(d) and the supplemental documents filed in support thereof on August 14, 2008. The supplemental documents were filed in response to a request for further clarification on the original petition by the undersigned during a telephone interview with Steven Snyder, attorney for Applicant, on August 11, 2008.

The petition to make the application special is **GRANTED**.

The application is eligible for accelerated examination and the petition complies with the conditions for granting the application special status pursuant to the "Change to Practice for Petitions in Patent Applications to Make Special and for Accelerated Examination" published June 26, 2006, in the Federal Register. (71 Fed. Reg. 36323).

The prosecution of the instant application will be conducted expeditiously according to the following guidelines.

1. The application will be docketed to an examiner and taken up for action within two weeks of the date of this decision.

2. Restriction Practice:
   If the examiner determines that the claims are not directed to a single invention, a telephone request to elect one single invention will be made pursuant to MPEP 812.01. As a prerequisite to the grant of this petition, the applicant has agreed to make an oral election, by telephone, without traverse. If the applicant refuses to make an election without traverse, or the examiner cannot reach the applicant after a reasonable effort, the examiner

will treat the first claimed invention (invention defined by claim 1) as having being constructively elected without traverse for examination.

3. Office action:
If it is determined that, after appropriate consultation, there is a potential rejection or any other issue to be addressed, the examiner will telephone the applicant and arrange an interview to discuss and resolve the issue. An Office action, other than a Notice of Allowance and Fee(s) Due (Notice of Allowance), will not be issued unless either: 1) an interview was conducted but did not result in agreed to action that places the application in condition for allowance, or, 2) a determination is made that an interview would be unlikely to result in the application being placed in condition for allowance, and 3) an internal conference has been held to review any rejection of any claim.

4. Time for Reply:
An Office action other than a Notice of Allowance or a final Office action will set a shortened statutory period of one month or thirty days, whichever is longer, for reply with no extension of time available under 37 CFR 1.136(a). Failure to timely file a reply within this non-extendible period for reply will result in the abandonment of the application.

5. Reply by Applicant:
A timely reply to an Office action other than the Notice of Allowance must be submitted electronically via EFS or EFS-web and limited to addressing the rejections, objections and requirement made. Any amendment that attempts to: 1) add claims which would result in more than three pending independent claims or more than twenty pending total claims; 2) present claims not encompassed by the pre-examination search or an updated accelerated examination support document; or 3) present claims that are directed a non-elected invention or an invention other than that previously claimed and examined in the application, will be treated as not fully responsive and will not be entered.

For any amendment to the claims (including any new claim) that is not encompassed by the accelerated examination support document, applicant must provide an updated accelerated examination support document that encompasses the amended or new claims at the time of filing of the amendment.

To proceed expeditiously with the examination, it is recommended that a reply with amendments made to any claim or with any new claim being added be accompanied by an updated accelerated examination support document or a statement explaining how the amended or new claim is supported by the original accelerated examination support document.

6. Information Disclosure Statement (IDS):
Any IDS filed during prosecution must be submitted electronically via EFS or EFS-web, accompanied by an updated accelerated examination support document, and be in compliance with 37 CFR 1.97 and 1.98.

7. Post-Allowance Processing:

To expedite processing of the allowed application into a patent, the applicant must: 1) pay the required fees within one month of the date of the Notice of Allowance, and 2) not file any post allowance papers not required by the Office. In no event may the issue fee be paid and accepted later than three months from the date of the Notice of Allowance.

8. After-Final and Appeal Procedures:
   To expedite prosecution, after receiving the final Office action, applicant must: 1) promptly file a notice of appeal, an appeal brief and appeal fees; and 2) not request a pre-appeal brief conference.

   Any amendment, affidavit or other evidence filed after final Office action must comply with applicable rules and the requirements outlined in numbered paragraphs 5 and 6 above.

   On appeal, the application will proceed according to normal appeal procedures. After appeal, the application will again be treated special.

9. Proceedings Outside the Normal Examination Process:
   If the application becomes involved in a proceeding that is outside the normal examination process (e.g., a secrecy order, national security review, interference proceeding, petitions under 37 CFR 1.181, 182 or 183), the application will be treated special before and after such proceeding.

10. Final Disposition:
    The twelve-month goal of this accelerated examination procedure ends with a final disposition. The mailing of a final Office action, a Notice of Allowance, the filing of a Notice of Appeal, or the filing of a Request for Continued Examination (RCE) is the final disposition.

If, during prosecution, a paper is not filed electronically using EFS-web, a reply is filed but is not fully responsive, the application is involved in an appeal, or a proceeding outside normal examination process, the application will still be examined expeditiously, however, the final disposition may occur more than twelve months from the filing of the application. In addition, Applicant is reminded that due to the dismissal of the previous petition submission, examination may not be completed within twelve months of the filing date of the application.

Any inquiry regarding this decision should be directed to Kakali Chaki at (571) 272-3719.

/Kakali Chaki/

Kakali Chaki, Quality Assurance Specialist
Technology Center 2100

UNITED STATES PATENT AND TRADEMARK OFFICE

Commissioner for Patents
United States Patent and Trademark Office
P.O. Box 1450
Alexandria, VA 22313-1450
www.uspto.gov

MAILED

APR 06 2009

OFFICE OF PETITIONS

Weaver Austin Villeneuve & Sampson, LLP
P.O. Box 70250
Oakland, CA 94612-0250

In re Application of	:	
Ernest G. Hope et al.	:	
Application No. 12/058,483	:	DECISION ON PETITION
Filed: March 28, 2008	:	TO WITHDRAW
Attorney Docket No. HOPEP001D1	:	FROM RECORD
	:	

This is a decision on the Request to Withdraw as attorney or agent of record under 37 C.F.R. § 1.36(b), filed March 16, 2009.

The request is **APPROVED**.

A grantable request to withdraw as attorney/agent of record must be signed by every attorney/agent seeking to withdraw or contain a clear indication that one attorney is signing on behalf of another/others. A request to withdraw will not be approved unless at least 30 (thirty) days would remain between the date of approval and the later of the expiration date of a time to file a response or the expiration date of the maximum time period which can be extended under 37 C.F.R. § 1.136(a).

The request was signed by Emily M. Haliday on behalf of all attorneys/agents associated with customer number 22434. All attorneys/agents associated with customer number 22434 have been withdrawn.

Applicant is reminded that there is no attorney of record at this time.

The correspondence address has been changed. All future correspondence will be mailed to the address of the first signing inventor.

Telephone inquiries concerning this decision should be directed to Kimberly Inabinet at 571-272-4618.

Kimberly Inabinet
Petitions Examiner
Office of Petitions

cc: Ernest G. Hope
3130 Alpine Road
Suite 288-602
Oakland, CA 94607

UNITED STATES PATENT AND TRADEMARK OFFICE

UNITED STATES DEPARTMENT OF COMMERCE
United States Patent and Trademark Office
Address: COMMISSIONER FOR PATENTS
P.O. Box 1450
Alexandria, Virginia 22313-1450
www.uspto.gov

APPLICATION NUMBER	FILING OR 371(C) DATE	FIRST NAMED APPLICANT	ATTY. DOCKET NO./TITLE
12/058,483	03/28/2008	Ernest G. Hope	HOPEP001D1

CONFIRMATION NO. 3226

POWER OF ATTORNEY NOTICE

22434
Weaver Austin Villeneuve & Sampson LLP
P.O. BOX 70250
OAKLAND, CA 94612-0250

OC000000035341547

Date Mailed: 04/06/2009

NOTICE REGARDING CHANGE OF POWER OF ATTORNEY

This is in response to the Power of Attorney filed 03/16/2009.

- The withdrawal as attorney in this application has been accepted. Future correspondence will be mailed to the new address of record. 37 CFR 1.33.

/kainabinet/

Office of Data Management, Application Assistance Unit (571) 272-4000, or (571) 272-4200, or 1-888-786-0101

UNITED STATES PATENT AND TRADEMARK OFFICE

Commissioner for Patents
United States Patent and Trademark Office
P.O. Box 1450
Alexandria, VA 22313-1450
www.uspto.gov

BEYER LAW GROUP LLP
P.O. BOX 1687
CUPERTINO CA 95015-1687

COPY MAILED

MAR 2 7 2009

OFFICE OF PETITIONS

In re Application of	:	
BEVIRT, Joeben	:	
Application No. 12/058,519	:	DECISION ON PETITION
Filed: March 28, 2008	:	TO WITHDRAW
Attorney Docket No. **JOBYP004**	:	FROM RECORD
	:	

This is a decision on the Request to Withdraw as attorney or agent of record under 37 C.F.R. § 1.36(b), filed January 16, 2009.

The request is **APPROVED**.

A grantable request to withdraw as attorney/agent of record must be signed by every attorney/agent seeking to withdraw or contain a clear indication that one attorney is signing on behalf of another/others. The Office requires the practitioner(s) requesting withdrawal to certify that he, she, or they have: (1) given reasonable notice to the client, prior to the expiration of the response period, that the practitioner(s) intends to withdraw from employment; (2) delivered to the client or a duly authorized representative of the client all papers and property (including funds) to which the client is entitled; and (3) notified the client of any responses that may be due and the time frame within which the client must respond, pursuant 37 CFR 10.40(c).

The request was signed by Francis Kalinski, II on behalf of all attorneys of record who are associated with customer No. 58766. All attorneys/agents associated with the Customer Number 58766 have been withdrawn. Applicant is reminded that there is no attorney of record at this time.

All future correspondence will be directed to the first named inventor Joeben Bevirt at the address indicated below.

Telephone inquiries concerning this decision should be directed to Tredelle Jackson at 571-272-2783.

Tredelle D. Jackson
Paralegal Specialist
Office of Petitions

cc: **JOEBEN BEVIRT**
C/O MICHAEL A. GUTH, ESQ.
2-2905 EAST CLIFF DRIVE
SANTA CRUZ CA 95062

UNITED STATES PATENT AND TRADEMARK OFFICE

Commissioner for Patents
United States Patent and Trademark Office
P.O. Box 1450
Alexandria, VA 22313-1450
www.uspto.gov

WEAVER AUSTIN VILLENEUVE & SAMPSON LLP
P.O. BOX 70250
OAKLAND CA 94612-0250

COPY MAILED

APR 27 2009

OFFICE OF PETITIONS

In re Application of :
HOPE, Ernest G. :
Application No. 12/058,524 :
Filed: March 28, 2008 :
Attorney Docket No. HOPEP002D1 :

DECISION ON PETITION
TO WITHDRAW
FROM RECORD

This is a decision on the Request to Withdraw as attorney or agent of record under 37 C.F.R. § 1.36(b), filed March 16, 2009.

The request is **APPROVED**.

A grantable request to withdraw as attorney/agent of record must be signed by every attorney/agent seeking to withdraw or contain a clear indication that one attorney is signing on behalf of another/others. The Office requires the practitioner(s) requesting withdrawal to certify that he, she, or they have: (1) given reasonable notice to the client, prior to the expiration of the response period, that the practitioner(s) intends to withdraw from employment; (2) delivered to the client or a duly authorized representative of the client all papers and property (including funds) to which the client is entitled; and (3) notified the client of any responses that may be due and the time frame within which the client must respond, pursuant 37 CFR 10.40(c).

The request was signed by Emily Haliday on behalf of all attorneys of record who are associated with customer No. 22434. All attorneys/agents associated with the Customer Number 22434 have been withdrawn. Applicant is reminded that there is no attorney of record at this time.

All future correspondence will be directed to the first named inventor Ernest Hope at the address indicated below.

Telephone inquiries concerning this decision should be directed to Tredelle Jackson at 571-272-2783.

Tredelle D. Jackson
Paralegal Specialist
Office of Petitions

cc: **ENERST G. HOPE**
3130 ALPINE ROAD
SUITE 288-602
PORTOLA VALEY CA 94028

UNITED STATES PATENT AND TRADEMARK OFFICE

Commissioner for Patents
United States Patent and Trademark Office
P.O. Box 1450
Alexandria, VA 22313-1450
www.uspto.gov

FISH & RICHARDSON PC
PO BOX 1022
MINNEAPOLIS, MN 55440-1022

COPY MAILED

APR 30 2009

OFFICE OF PETITIONS

In re Application of	:	
Junesok Hwang	:	
Application No. 12/058,536	:	DECISION ON PETITION
Filed: March 28, 2008	:	TO WITHDRAW
Attorney Docket No. 22214-003001	:	FROM RECORD
	:	

This is a decision on the Request to Withdraw as attorney or agent of record under 37 C.F.R. § 1.36(b), filed March 26, 2009.

The request is **NOT APPROVED**.

A grantable request to withdraw as attorney/agent of record must be signed by every attorney/agent seeking to withdraw or contain a clear indication that one attorney is signing on behalf of another/others.

The request cannot be approved because petitioner did not provide the customer number they wish to have withdrawn.

All future communications from the Office will continue to be directed to the above-listed address until otherwise notified by applicant.

Telephone inquiries concerning this decision should be directed to undersigned at 571-272-1642.

/AMW/
April M. Wise
Petitions Examiner
Office of Petitions

cc: JUNESOK JACOB HWANG
R & D OFFICE
37-317 SEOUL NATIONAL UNIVERSITY
SEOUL, KOREA

UNITED STATES PATENT AND TRADEMARK OFFICE

Commissioner for Patents
United States Patent and Trademark Office
P.O. Box 1450
Alexandria, VA 22313-1450
www.uspto.gov

FISH & RICHARDSON P.C.
PO BOX 1022
MINNEAPOLIS MN 55440-1022

MAILED

JUN 22 2009

OFFICE OF PETITIONS

In re Application of	:	
Junseok Hwang	:	
Application No. 12/058,536	:	DECISION ON PETITION
Filed: March 28, 2008	:	TO WITHDRAW
Attorney Docket No. 22214-0031001	:	FROM RECORD
	:	

This is a decision on the renewed Request to Withdraw as attorney or agent of record under 37 C.F.R. § 1.36(b), filed May 7, 2009.

The request is **APPROVED**.

A grantable request to withdraw as attorney/agent of record must be signed by every attorney/agent seeking to withdraw or contain a clear indication that one attorney is signing on behalf of another/others.

The request was signed by Kirk A. Gottlieb on behalf of all attorneys of record who are associated with customer No. 26181. All attorneys/agents associated with the Customer Number 26181 have been withdrawn. Applicant is reminded that there is no attorney of record at this time.

The correspondence address of record has been changed and the new correspondence address is the address indicated below.

There are no pending Office actions at the present time.

Telephone inquiries concerning this decision should be directed to undersigned at 571-272-1642. All other inquiries concerning the examination or status of this application should be directed to the Technology Center.

/AMW/
April M. Wise
Petitions Examiner
Office of Petitions

cc: JACOB JUNESOK HWANG
R & D OFFICE
37-317, SEOUL NATIONAL UNIVERSITY
SEOUL, KOREA

UNITED STATES PATENT AND TRADEMARK OFFICE

Commissioner for Patents
United States Patent and Trademark Office
P.O. Box 1450
Alexandria, VA 22313-1450
www.uspto.gov

Weaver Austin Villeneuve & Sampson LLP
P.O. BOX 70250
OAKLAND CA 94612-0250

COPY MAILED

APR 23 2009

OFFICE OF PETITIONS

In re Application of Ernest G. Hope Application No. 12/058,538 Filed: March 28, 2008 Attorney Docket No. HOPEP002D2	:	DECISION ON PETITION TO WITHDRAW FROM RECORD

This is a decision on the Request to Withdraw as attorney or agent of record under 37 C.F.R. § 1.36(b), filed March 16, 2009.

The request is **APPROVED**.

A grantable request to withdraw as attorney/agent of record must be signed by every attorney/agent seeking to withdraw or contain a clear indication that one attorney is signing on behalf of another/others.

The request was signed by Emily M. Haliday on behalf of all attorneys of record who are associated with Customer No. 22434.

All attorneys/agents associated with the Customer No. 22434 have been withdrawn.

Applicant is reminded that there is no attorney of record at this time.

All future correspondence will be directed to the first named inventor Ernest G. Hope at the address indicated in the request.

There is an outstanding Office action mailed March 6, 2009, that requires a reply from the applicant.

Telephone inquiries concerning this decision should be directed to JoAnne Burke at (571)272-4584.

Ramesh Krishnamurthy
Petitions Examiner
Office of Petitions

cc: Ernest G. Hope
3130 Alpine Road
Suite 288-602
Portola Valley, CA 94028

UNITED STATES PATENT AND TRADEMARK OFFICE

UNITED STATES DEPARTMENT OF COMMERCE
United States Patent and Trademark Office
Address: COMMISSIONER FOR PATENTS
P.O. Box 1450
Alexandria, Virginia 22313-1450
www.uspto.gov

APPLICATION NUMBER	FILING OR 371(C) DATE	FIRST NAMED APPLICANT	ATTY. DOCKET NO./TITLE
12/058,538	03/28/2008	Ernest G. Hope	HOPEP002D2

CONFIRMATION NO. 3351

POWER OF ATTORNEY NOTICE

22434
Weaver Austin Villeneuve & Sampson LLP
P.O. BOX 70250
OAKLAND, CA 94612-0250

OC000000035509341

Date Mailed: 04/15/2009

NOTICE REGARDING CHANGE OF POWER OF ATTORNEY

This is in response to the Power of Attorney filed 03/16/2009.

- The withdrawal as attorney in this application has been accepted. Future correspondence will be mailed to the new address of record. 37 CFR 1.33.

/jlburke/

Office of Data Management, Application Assistance Unit (571) 272-4000, or (571) 272-4200, or 1-888-786-0101

UNITED STATES PATENT AND TRADEMARK OFFICE

UNITED STATES DEPARTMENT OF COMMERCE
United States Patent and Trademark Office
Address: COMMISSIONER FOR PATENTS
P.O. Box 1450
Alexandria, Virginia 22313-1450
www.uspto.gov

APPLICATION NO.	FILING DATE	FIRST NAMED INVENTOR	ATTORNEY DOCKET NO.	CONFIRMATION NO.
12/058,592	03/28/2008	Tadayuki YOSHIMOTO	Q106736	3471

7590 03/01/2010
SUGHRUE MION, PLLC
2100 Pennsylvania Avenue, N.W.
Washington, DC 20037

EXAMINER
LUU, MATTHEW

ART UNIT	PAPER NUMBER
2861	

NOTIFICATION DATE	DELIVERY MODE
03/01/2010	ELECTRONIC

DECISION GRANTING PETITION UNDER 37 CFR 1.138(d)

The declaration of express abandonment is recognized

This is in response to the petition under 37 CFR 1.138(d), requesting for a refund of any previously paid search fee and excess claims fee in the above-identified application.

The petition is granted.

The express abandonment is recognized. Any previously paid search fee and excess claims fee are hereby refunded.

Telephone inquiries should be directed to the Office of Data Management at (571) 272-4200.

Patent Publication Branch
Office of Data Management

Adjustment date: 03/01/2010 NFARMER
03/31/2008 INTERGW 00004297 194080 12058592
02 FC:1111 510.00 CR

FORM PET651G (Rev. 08/07)

CLAIMS

1. (Currently amended) Digital amplifier for amplifying a digital input signal, comprising:

   a) a digital modulator for converting the digital input signal into an amplitude-discrete and temporally analogue signal;

   b) an error correction circuit which modulates the pulse widths of the amplitude-discrete and temporally analogue signal in dependence on an analogue error signal;

   c) a power switching stage, the input of which receives the signal modulated by the error correction circuit (5) and which delivers the modulated signal amplified on an output line; and comprising

   d) an analogue integrator circuit with a first signal input, at which a reference signal is present, and a second signal input which is connected to the output line of the power switching stage, wherein the integrator circuit integrates the deviation between the reference signal and the amplified signal present at the output line for calculating the analogue error signal<u>, wherein a reference switching stage is provided which receives the output signal of the modulator and generates from this the reference signal for the analogue integrator circuit</u>.

2. (Original) Digital amplifier according to Claim 1, wherein the analogue integrator circuit has an operational amplifier.

3. (Cancelled)

4. (Original) Digital amplifier according to Claim ~~3,~~ 1 wherein the reference switching stage has at least one inverter stage.

5. (Original) Digital amplifier according to Claim 4, wherein the reference switching stage is supplied with a smoothed supply voltage.

6. (Currently amended) Digital amplifier ~~according to Claim 1, wherein~~ for amplifying a digital input signal, comprising:

a) a digital modulator for converting the digital input signal into an amplitude-discrete and temporally analogue signal;

b) an error correction circuit which modulates the pulse widths of the amplitude-discrete and temporally analogue signal in dependence on an analogue error signal, the error correction circuit ~~has~~ having delay elements which are adjustable by analogue means;

c) a power switching stage, the input of which receives the signal modulated by the error correction circuit (5) and which delivers the modulated signal amplified on an output line; and comprising

d) an analogue integrator circuit with a first signal input, at which a reference signal is present, and a second signal input which is connected to the output

line of the power switching stage, wherein the integrator circuit integrates the deviation between the reference signal and the amplified signal present at the output line for calculating the analogue error signal.

7. (Original) Digital amplifier according to Claim 6, wherein the output signal of the modulator is branched at a branching node of the error correction circuit to form a first signal and to form a second signal, wherein the branched first signal is supplied to a first delay element of the error correction circuit with adjustable signal delay and the branched second signal is supplied to a second delay element of the error correction circuit with fixed signal delay.

8. (Original) Digital amplifier according to Claim 7, wherein the error correction circuit has a flip flop which is driven by the signals delayed by the two delay elements for generating the modulated signal.

9. (Original) Digital amplifier according to Claim 8, wherein a signal output of the flip flop is connected to the input of the power switching stage.

10. (Original) Digital amplifier according to Claim 6, wherein the delay elements of the error correction circuit are formed by inverter stages having a capacitive load.

11. (Original) Digital amplifier according to Claim 10, wherein the signal delay of the first delay element of the error correction circuit is adjusted by adjusting the capacitive load of the inverter stage.

12. (Original) Digital amplifier according to Claim 10, wherein the signal delay of the first delay element of the error correction circuit is adjusted by adjusting shunt currents of the inverter stage.

13. (Original) Digital amplifier according to Claim 7, wherein the error correction circuit has a logic circuit which logically combines the signals delayed by the two delay elements for generating the modulated signal.

14. (Original) Digital amplifier according to Claim 13, wherein the logic circuit is formed by an EXOR logic.

15. (Original) Digital amplifier according to Claim 1, wherein the digital input signal is an N-bit-wide PCM signal.

16. (Original) Digital amplifier according to Claim 1, wherein the amplitude-discrete and temporally analogue signal is a pulse-width modulated signal or a pulse-density modulated signal.

17. (Original) Digital amplifier according to Claim 1, wherein the amplitude-discrete signal is a binary 1-bit signal or a ternary 1.5-bit signal.

18. (Currently amended) Method for amplifying a digital input signal, comprising the following steps:

a) converting a digital input signal into an amplitude-discrete and temporally analogue signal;

b) modulating the amplitude-discrete and temporally analogue signal in dependence on an analogue error signal;

c) amplifying the modulated signal; ~~and~~

d) integrating a deviation between a reference signal and the amplified signal for calculating the analogue error signal; and

e) receiving the amplitude-discrete and temporally analogue signal by a reference switching stage and using the amplitude-discrete and temporally analogue signal to generate the reference signal.

UNITED STATES PATENT AND TRADEMARK OFFICE

UNITED STATES DEPARTMENT OF COMMERCE
United States Patent and Trademark Office
Address: COMMISSIONER FOR PATENTS
P.O. Box 1450
Alexandria, Virginia 22313-1450
www.uspto.gov

APPLICATION NO.	FILING DATE	FIRST NAMED INVENTOR	ATTORNEY DOCKET NO.	CONFIRMATION NO.
12/058,609	03/28/2008	Terrence P. Kane	6122-015	3508

29335 7590 04/01/2010
ROSENBAUM & SILVERT, P.C.
1480 TECHNY ROAD
NORTHBROOK, IL 60062

EXAMINER
HRUSKOCI, PETER A

ART UNIT	PAPER NUMBER
1797	

NOTIFICATION DATE	DELIVERY MODE
04/01/2010	ELECTRONIC

Please find below and/or attached an Office communication concerning this application or proceeding.

The time period for reply, if any, is set in the attached communication.

Notice of the Office communication was sent electronically on above-indicated "Notification Date" to the following e-mail address(es):

scotugno@biopatentlaw.com

UNITED STATES PATENT AND TRADEMARK OFFICE

Commissioner for Patents
United States Patent and Trademark Office
P.O. Box 1450
Alexandria, VA 22313-1450
www.uspto.gov

4/1/10

CST

In re application of Terrence Kane et al Serial No. 12/058,609 Filed: March 28, 2008 For: ELEMENT REMOVAL PROCESS AND APPARATUS	: : : : : :	DECISION ON PETITION TO MAKE SPECIAL

This is a decision on the petition filed on July 10, 2008 to make the above-identified application special based on materially enhancing the environment.

The petition to make the application special is **DENIED.**

REGULATION AND PRACTICE

Pursuant to the "Changes to Practice for Petitions in Patent Applications to Make Special and for Accelerated Examination" published in the Federal Register on June 26, 2006 (71 Fed. Reg. 36323), all petitions to make special, except those based on applicant's health or age or the PPH pilot, filed on or after August 25, 2006 are required to comply with the requirements of petitions to make special under the accelerated examination program. Note that any petition to make special under MPEP § 708.02, based solely on subsection V (environment) was required to be filed prior to August 25, 2006.

To be eligible for accelerated examination under 37 C.F.R. § 1.102(d) and pursuant to the "Changes to Practice for Petitions in Patent Applications to Make Special and for Accelerated Examination" published in the Federal Register on June 26, 2006 (71 Fed. Reg. 36323), the following conditions must be satisfied:

1. The application must be a non-reissue utility or design application filed under 37 CFR 1.111(a);
2. The application, the petition and the required fees must be filed electronically using the USPTO's electronic filing system (EFS), or EFS-web; if not filed electronically, a statement asserting that EFS and EFS-web were not available during the normal business hours;
3. The application, at the time of filing, must be complete under 37 CFR 1.51 and in condition for examination;

4. The application must contain three or fewer independent claims and twenty or fewer total claims and the claims must be directed to a single invention.

The application as filed is not eligible for accelerated examination under 37 C.F.R. § 1.102(d) because the application contains greater than twenty claims (there are 24 claims).

Furthermore, the application as filed is not eligible for accelerated examination under 37 C.F.R. § 1.102(d) because the application, at the time of filing, was not in condition for examination. Note, specifically, the NOTICE TO FILE MISSING PARTS OF NONPROVISIONAL APPLICATION mailed on May 7, 2008, which indicates that the application was not in condition for examination at the time of filing.

MPEP 708.02(a), section VIII further states:

> The petition to make special will be dismissed if the application omits an item or includes a paper that causes the Office of Initial Patent Examination (OIPE) to mail a notice during the formality review (e.g., a notice of incomplete application, notice to file missing parts, notice to file corrected application papers, notice of omitted items, or notice of informal application). The opportunity to perfect a petition (subsection II above) does not apply to applications that are not in condition for examination on filing.

Additionally, the petition to make special was not filed concurrently with the application as required by MPEP § 708.02(a).

For the above-stated reasons, the petition is denied. The application will therefore be taken up by the examiner for action in its regular turn.

Any inquiry regarding this decision should be directed to Christine Tierney, Quality Assurance Specialist, at (571) 272-1055.

/Christine Tierney/

Christine Tierney
Quality Assurance Specialist
Technology Center 1700

UNITED STATES PATENT AND TRADEMARK OFFICE

Commissioner for Patents
United States Patent and Trademark Office
P.O. Box 1450
Alexandria, VA 22313-1450
www.uspto.gov

DLA PIPER LLP (US)
4365 EXECUTIVE DRIVE
SUITE 1100
SAN DIEGO, CA 92121-2133

COPY MAILED

DEC 1 1 2008

OFFICE OF PETITIONS

In re Application of Gomurashvili et al. :
Application No. 12/058,613 :
Filing Date: March 28, 2008 :
Attorney Docket No. MEDIV3080-2 :

Decision on Petition

This is a decision in response to the petition filed July 17, 2008, requesting, in effect, that page 33 of the specification filed on July 17, 2008, be entered as part of the original disclosure.

The petition is **dismissed**.

The application was filed March 28, 2008.

The Office of Initial Patent Examination mailed a Notice to File Missing Parts on April 18, 2007. The Notice stated page 33 of the specification did not appear to be part of the application as filed.

In response, the present petition was filed. Petitioner alleges page 33 of the specification was filed with the original application papers.

Petitioner asserts the Electronic Acknowledgement Receipt ("Receipt") supports a conclusion that page 33 of the specification was filed with the original application papers. However, the Receipt does not support such a conclusion.

The Receipt can constitute proof a paper has been filed. In the instant case, the Receipt indicates 83 pages of specification (excluding claims and abstract) were received by the Office. The file record includes 83 pages of specification labeled 1 to 32 and 34 to 84. Therefore, the file is not proof page 33 of the specification was part of the application papers filed March 28, 2008.

Since applicants have not filed a petition under 37 CFR 1.182 requesting July 17, 2008, the date the missing page was filed, become the new filing date, page 33 of the specification filed on July 17, 2008, will <u>not</u> be entered.

Unless a request for reconsideration is filed, an amendment to the specification deleting references to the missing Figure should be filed prior to the first USPTO action in order to avoid further delays in the examination of the application. In the alternative, if some of the material in

the missing Figure is not new matter, petitioner may wish to submit the missing material in the form of an amendment.

Page 33 of the specification was not present in the Office on March 28, 2008. Therefore, the page is not part of the original disclosure of the present application and will not be used when processing the application.

The original application papers will include only those application papers present on the date of deposit.

Any request for reconsideration must be submitted within TWO (2) MONTHS from the mail date of this decision. No further petition fee is required for the request. Extensions of time under 37 CFR 1.136(a) are NOT permitted. The reconsideration request should include a cover letter entitled "Renewed Petition under 37 CFR 1.53(e)." This is **not** final agency action within the meaning of 5 U.S.C. § 704.

Unless filed by EFS Web, further correspondence with respect to this matter should be addressed as follows:

By mail: Mail Stop Petition
Commissioner for Patents
P.O. Box 1450
Alexandria, VA 22313-1450

By facsimile: (571) 273-8300
Attn: Office of Petitions

By hand: U.S. Patent and Trademark Office
Customer Service Window
Randolph Building
401 Dulany Street
Alexandria, VA 22314

Telephone inquiries regarding this communication should be directed to Petitions Attorney Steven Brantley at (571) 272-3203.

Charles Steven Brantley
Senior Petitions Attorney
Office of Petitions

UNITED STATES PATENT AND TRADEMARK OFFICE

Commissioner for Patents
United States Patent and Trademark Office
P.O. Box 1450
Alexandria, VA 22313-1450
www.uspto.gov

DLA PIPER LLP (US)
4365 EXECUTIVE DRIVE
SUITE 1100
SAN DIEGO, CA 92121-2133

MAILED

MAY 07 2009

OFFICE OF PETITIONS

In re Application of Gomurashvili et al. :
Application No. 12/058,613 :
Filing Date: March 28, 2008 :
Attorney Docket No. MEDIV3080-2 :

Decision on Petition

This is a decision in response to the petition filed February 11, 2009, requesting entry of page 33 of the specification filed on February 11, 2009.

The petition is **dismissed**.

Facts

The application was filed March 28, 2008.

The Office of Patent Examination Processing mailed a Notice to File Missing Parts on April 18, 2008. The Notice indicated the application had been accorded a filing date of March 28, 2008, and indicated page 33 of the specification did not appear to be part of the application as filed.

A petition under 37 CFR 1.53(e) was filed July 17, 2008. The petition alleged page 33 of the specification was filed as part of the original application papers.

A decision dismissing the petition was mailed December 11, 2008.

On February 11, 2009, petitioner filed an amendment pursuant to 37 CFR 1.57(a), the instant petition, and a petition fee of $400. Petitioner requests the application be amended to include inadvertently omitted page 33 of the specification on the basis that the application as filed contained a proper priority claim under 37 CFR 1.78.

Discussion

When an application has been accorded a filing date, an amendment under 37 CFR 1.57(a) does *not* need to be accompanied by a petition. A petition is only necessary if the application has not been accorded a filing date. See 37 CFR 1.57(a)(3).

The petition is unnecessary and is hereby dismissed.

Although the petition is dismissed, the amendment to add page 33 of the specification will be considered by the examiner in due course.

Since the present petition was not necessitated by any error on the part of the Office, the $400 petition fee will not be refunded.

The Office of Patent Examination Processing will be informed of the instant decision and will process the application with a filing date of March 28, 2008, using only the application papers filed March 28, 2008.

Entry of the amendment filed February 11, 2009, will be determined by the examiner in due course.

Telephone inquiries regarding this communication should be directed to Petitions Attorney Steven Brantley at (571) 272-3203.

Anthony Knight
Supervisory Petitions Examiner
Office of Petitions

UNITED STATES PATENT AND TRADEMARK OFFICE

UNITED STATES DEPARTMENT OF COMMERCE
United States Patent and Trademark Office
Address: COMMISSIONER FOR PATENTS
P.O. Box 1450
Alexandria, Virginia 22313-1450
www.uspto.gov

APPLICATION NO.	FILING DATE	FIRST NAMED INVENTOR	ATTORNEY DOCKET NO.	CONFIRMATION NO.
12/058,629	03/28/2008	Kamal Kishore Goundar	ASMJP.241AUS	3545

7590 01/15/2010
KNOBBE MARTENS OLSON & BEAR LLP
2040 MAIN STREET
FOURTEENTH FLOOR
IRVINE, CA 92614

EXAMINER
GAMBETTA, KELLY M

ART UNIT	PAPER NUMBER
1792	

NOTIFICATION DATE	DELIVERY MODE
01/15/2010	ELECTRONIC

DECISION GRANTING PETITION UNDER 37 CFR 1.138(d)

The declaration of express abandonment is recognized

This is in response to the petition under 37 CFR 1.138(d), requesting for a refund of any previously paid search fee and excess claims fee in the above-identified application.

The petition is granted.

The express abandonment is recognized. Any previously paid search fee and excess claims fee are hereby refunded.

Telephone inquiries should be directed to the Office of Data Management at (571) 272-4200.

Nioni Farmer

Patent Publication Branch
Office of Data Management

Refund Ref:
01/14/2010 0033070879

Credit Card Refund Total: [illegible]

Payer [illegible]

Adjustment date: 01/14/2010 NFARMER
05/29/2008 INTEFSW 00003409 12058629
02 FC:1111 -513.00 OP
04 FC:1202 -250.00 OP

FORM PET651G (Rev. 08/07)

UNITED STATES PATENT AND TRADEMARK OFFICE

UNITED STATES DEPARTMENT OF COMMERCE
United States Patent and Trademark Office
Address: COMMISSIONER FOR PATENTS
P.O. Box 1450
Alexandria, Virginia 22313-1450
www.uspto.gov

APPLICATION NO.	FILING DATE	FIRST NAMED INVENTOR	ATTORNEY DOCKET NO.	CONFIRMATION NO.
12/058,690	03/29/2008	Nils Haustein	DE920080024US1	3672

48150 7590 04/28/2008
MCGINN INTELLECTUAL PROPERTY LAW GROUP, PLLC
8321 OLD COURTHOUSE ROAD
SUITE 200
VIENNA, VA 22182-3817

EXAMINER

ART UNIT	PAPER NUMBER
2612	

MAIL DATE	DELIVERY MODE
04/28/2008	PAPER

Please find below and/or attached an Office communication concerning this application or proceeding.

The time period for reply, if any, is set in the attached communication.

UNITED STATES PATENT AND TRADEMARK OFFICE

Commissioner for Patents
United States Patent and Trademark Office
P.O. Box 1450
Alexandria, VA 22313-1450
www.uspto.gov

MCGINN INTELLECTUAL PROPERTY LAW GROUP, PLLC
8321 OLD COURTHOUSE ROAD
SUITE 200
VIENNA VA 22182-3817

In re Application of: Nils HAUSTEIN, et al. Serial No.: 12/058,690 Filed: March 29, 2008 Title: **MEDIA PASSPORT SYSTEM**	DECISION ON PETITION TO MAKE SPECIAL FOR NEW APPLICATION UNDER 37 C.F.R. § 1.102 & M.P.E.P. § 708.02

This is a decision on the petition filed on March 29, 2008 to make the above-identified application special for accelerated examination procedure under 37 C.F.R. § 1.102(d).

The petition to make the application special is **DENIED**.

REGULATION AND PRACTICE

To be eligible for accelerated examination under 37 C.F.R. § 1.102(d) and pursuant to the "Change to Practice for Petitions in Patent Applications to Make Special and for Accelerated Examination" published in the Federal Register on June 26, 2006 (71 Fed. Reg. 36323), the following conditions must be satisfied:

1. The application must be a non-reissue utility or design application filed under 37 CFR 1.111(a);
2. The application, the petition and the required fees must be filed electronically using the USPTO's electronic filing system (EFS), or EFS-web; if not filed electronically, a statement asserting that EFS and EFS-web were not available during the normal business hours;
3. The application, at the time of filing, must be complete under 37 CFR 1.51 and in condition for examination;
4. The application must contain three or fewer independent claims and twenty or fewer total claims and the claims must be directed to a single invention.

The application as filed is not eligible for accelerated examination under 37 C.F.R. § 1.102(d) because the application was not complete at the time of filing, as set forth in condition 3. above. A Notice to File Corrected Application Papers was mailed on April 4, 2008.

For the above-stated reason, the petition is denied. After the application is considered complete by the Office of Initial Patent Examination (OIPE), it will be taken up by the examiner for action in its regular turn.

/Krista Zele/

Krista Zele
Quality Assurance Specialist
Technology Center 2600
Communications

UNITED STATES PATENT AND TRADEMARK OFFICE

UNITED STATES DEPARTMENT OF COMMERCE
United States Patent and Trademark Office
Address: COMMISSIONER FOR PATENTS
P.O. Box 1450
Alexandria, Virginia 22313-1450
www.uspto.gov

APPLICATION NO.	FILING DATE	FIRST NAMED INVENTOR	ATTORNEY DOCKET NO.	CONFIRMATION NO.
12/058,705	03/29/2008	BRETT BRACEWELL BONNER	2007001CIP	3711

73301 7590 04/29/2008
Theodore P. Cummings, Attorney at law
1600 Scripps Center, 312 Walnut Street
Cincinnati, OH 45202

EXAMINER

ART UNIT	PAPER NUMBER
3628	

MAIL DATE	DELIVERY MODE
04/29/2008	PAPER

Please find below and/or attached an Office communication concerning this application or proceeding.

The time period for reply, if any, is set in the attached communication.

UNITED STATES PATENT AND TRADEMARK OFFICE

Commissioner for Patents
United States Patent and Trademark Office
P.O. Box 1450
Alexandria, VA 22313-1450
www.uspto.gov

MAILED
FROM DIRECTORS OFFICE

APR 28 2008

TECHNOLOGY CENTER 3600

THEODORE P. CUMMINGS, ATTORNEY AT LAW
1600 SCRIPPS CENTER, 312 WALNUT STREET
CINCINNATI, OH 45202

In re application of
Bonner et al.
Application No. 12/058,705
Filed: March 29, 2008
For: A SYSTEM FOR SHOPPING IN A STORE

DECISION ON PETITION TO MAKE SPECIAL FOR NEW APPLICATION UNDER 37 CFR 1.102

This is a decision on the petition filed on March 29, 2008 to make the above-identified application special for accelerated examination procedure under 37 C.F.R. § 1.102(d).

The petition to make the application special is **DENIED**.

REGULATION AND PRACTICE

A grantable petition to make special under 37 C.F.R. § 1.102(d) and pursuant to the "Change to Practice for Petitions in Patent Applications to Make Special and for Accelerated Examination (AE)" published in the Federal Register on June 26, 2006 (71 Fed. Reg. 36323), must satisfy the following conditions:

I. Conditions Regarding the Application:

1. the application must be a non-reissue utility or design application filed under 37 CFR 1.111(a);

2. the application, the petition and the required fees must be filed electronically using the USPTO's electronic filing system (EFS), or EFS-web; if not filed electronically, a statement asserting that EFS and EFS-web were not available during the normal business hours.

3. at the time of filing, the application must be complete under 37 CFR 1.51 and in condition for examination;

4. the application must contain three or fewer independent claims and twenty or fewer total claims and the claims must be directed to a single invention.

II. Conditions Regarding the Petition:

The petition must:

1. be filed with the application;

2. include a statement that applicant agrees not to separately argue the patentability of any independent claim during any appeal in the application;

3. include a statement that applicant agrees to make an election without traverse in a telephone interview.

4. include a statement that applicant agrees to conduct such an interview when requested by the examiner.

5. include a statement, made based on a good faith belief, that a preexamination search in compliance with the following requirements, was conducted, including an identification of the field of search by United States class and subclass, where applicable, and for database searches, the search logic or chemical structure or sequence used as a query, the name of the file(s) searched and the database service, and the date of the search.

The preexamination search must:

5.1 involve U.S. patents and patent application publications, foreign patent documents, and non-patent literature, unless the applicant can justify with reasonable certainty that no references more pertinent than those already identified are likely to be found in the eliminated sources and includes such a justification with this statement;

5.2. be directed to the claimed invention and encompass all of the features of the claims, giving the claims the broadest reasonable interpretation;

5.3. encompass the disclosed features that may be claimed.

6. must provide in support of the petition an accelerated examination support document.

An accelerated examination support document must include:

6.1. an information disclosure statement (IDS) in compliance with 37 CFR 1.98 citing each reference deemed most closely related to the subject matter of each of the claims;

6.2. an identification of all the limitations in the claims that are disclosed by the reference specifying where the limitation is disclosed in the cited reference;

6.3. a detailed explanation of how each of the claims is patentable over the references cited with particularity required by 37 CFR 1.111(b) and (c);

6.4. a concise statement of the utility of the invention as defined in each of the independent claims (unless the application is a design application);

6.5. a showing of where each limitation of the claims finds support under 35 USC 112, first paragraph, in the written description of the specification. If applicable, the showing must also identify: (1) each means- (or step) plus-function claim element that invokes consideration under 35 USC 112, sixth paragraph; and (2) the structure, material, or acts in the specification that corresponds to each means- (or step) plus-

function claim element that invokes consideration under 35 USC 112, sixth paragraph; if the application claims the benefit of one or more applications under title 35, United States Code, the showing must also include where each limitation of the claims finds support under 35 USC 112, first paragraph, in each such application in which such supports exists;

6.6. an identification of any cited references that may be disqualified under 35 USC 103(c).

REVIEW OF FACTS

The petition in this case fails to comply with condition I.3, at the time of filing, the application must be complete under 37 CFR 1.51 and in condition for examination. At the time of filing, the oath was missing.

Given the above failure of conformance, which cannot now be remedied, the petition is denied.

The petition fails to meet the required conditions to be accorded special status under the accelerated examination procedure.

DECISION

For the above stated reason, the petition is **DENIED**. The application will therefore be taken up by the examiner for action in its regular turn.

Any inquiry regarding this decision should be directed to Robert Weinhardt, Business Practice Specialist, at (571) 272-6633. Inquiries may also be directed to Michael Cuff at (571) 272-6778.

Robert A. Weinhardt,
Business Practice Specialist
Technology Center 3600

RW/MAC/04/25/08

UNITED STATES PATENT AND TRADEMARK OFFICE

Commissioner for Patents
United States Patent and Trademark Office
P.O. Box 1450
Alexandria, VA 22313-1450
www.uspto.gov

MAILED

JUN 07 2010

OFFICE OF PETITIONS

LATIMER INTELLECTUAL PROPERTY LAW, LLP
P.O. BOX 711200
HERNDON, VA 20171

In re Application of	:	
Jean **PECCOUD** et al.	:	
Application No. 12/058,712	:	DECISION ON PETITION
Filed: March 30, 2008	:	TO WITHDRAW
Attorney Docket No. **VTIP-128**	:	FROM RECORD
	:	

This is a decision on the Request to Withdraw as attorney or agent of record under 37 C.F.R. § 1.36(b), filed April 21, 2010.

The request is **NOT APPROVED** as moot.

A review of the file record indicates that the power of attorney to Latimer Intellectual Property Law, LLP has been revoked by the assignee of the patent application on April 22, 2010. Accordingly, the request to withdraw under 37 C.F.R. § 1.36(b) is moot.

All future communications from the Office will continue to be directed to the below-listed address until otherwise notified by applicant.

Telephone inquires concerning this decision should be directed to the undersigned at 571-272- 4231.

Michelle R. Eason
Paralegal Specialist
Office of Petitions

cc: **NEW RIVER VALLEY INTELLECTUAL PROPERTY LAW**
P.O. BOX 10944
BLACKSBURG VA 24062

UNITED STATES PATENT AND TRADEMARK OFFICE

UNITED STATES DEPARTMENT OF COMMERCE
United States Patent and Trademark Office
Address: COMMISSIONER FOR PATENTS
P.O. Box 1450
Alexandria, Virginia 22313-1450
www.uspto.gov

APPLICATION NO.	FILING DATE	FIRST NAMED INVENTOR	ATTORNEY DOCKET NO.	CONFIRMATION NO.
12/058,724	03/30/2008	Nancy Chenxin Zhou	BUR920070242US1	3754

76055 7590 05/28/2008
PRTSI, INC
4661 CARISBROOKE LN
FAIRFAX, VA 22030

EXAMINER

ART UNIT	PAPER NUMBER
1795	

MAIL DATE	DELIVERY MODE
05/28/2008	PAPER

Please find below and/or attached an Office communication concerning this application or proceeding.

The time period for reply, if any, is set in the attached communication.

UNITED STATES PATENT AND TRADEMARK OFFICE

Commissioner for Patents
United States Patent and Trademark Office
P.O. Box 1450
Alexandria, VA 22313-1450
www.uspto.gov

CST

5-28-08

In re application of Nancy Chenxin Zhou et al Serial No. 12/058,724 Filed: March 30, 2008 For: METHOD FOR REDUCING PHOTO-MASK DISTORTION	: : : : : :	DECISION ON PETITION TO MAKE SPECIAL

This is a decision on the petition filed on March 30, 2008 to make the above-identified application special under the accelerated examination program.

The petition to make the application special is **DISMISSED.**

REGULATION AND PRACTICE

A grantable petition to make special under 37 C.F.R. § 1.102(d) and pursuant to the "Change to Practice for Petitions in Patent Applications to Make Special and for Accelerated Examination" published in the Federal Register on June 26, 2006 (71 Fed. Reg. 36323), must satisfy the following conditions:

I. Conditions Regarding the Application:

1. the application must be a non-reissue utility or design application filed under 37 CFR 1.111(a);
2. the application, the petition and the required fees must be filed electronically using the USPTO's electronic filing system (EFS), or EFS-web; if not filed electronically, a statement asserting that EFS and EFS-web were not available during the normal business hours;
3. at the time of filing, the application must be complete under 37 CFR 1.51 and in condition for examination;
4. the application must contain three or fewer independent claims and twenty or fewer total claims and the claims must be directed to a single invention.

II. Conditions Regarding the Petition:

The petition must:

1. be filed with the application;
2. include a statement that applicant agrees not to separately argue the patentability of any dependent claim during any appeal in the application;

3. include a statement that applicant agrees to make an election without traverse in a telephone interview;

4. include a statement that applicant agrees to conduct such an interview when requested by the examiner;

5. include a statement, made based on a good faith belief, that a preexamination search in compliance with the following requirements, was conducted, including an identification of the field of search by United States class and subclass, where applicable, and for database searches, the search logic or chemical structure or sequence used as a query, the name of the file(s) searched and the database service, and the date of the search.

The preexamination search must:

5.1 involve U.S. patents and patent application publications, foreign patent documents, and non-patent literature, unless the applicant can justify with reasonable certainty that no references more pertinent than those already identified are likely to be found in the eliminated sources and includes such a justification with this statement;

5.2. be directed to the claimed invention and encompass all of the features of the claims, giving the claims the broadest reasonable interpretation;

5.3. encompass the disclosed features that may be claimed.

6. must provide in support of the petition an accelerated examination support document.

An accelerated examination support document must include:

6.1. an information disclosure statement (IDS) in compliance with 37 CFR 1.98 citing each reference deemed most closely related to the subject matter of each of the claims;

6.2. an identification of all the limitations in the claims that are disclosed by the reference specifying where the limitation is disclosed in the cited reference;

6.3. a detailed explanation of how each of the claims are patentable over the references cited with particularity required by 37 CFR 1.111(b) and (c);

6.4. a concise statement of the utility of the invention as defined in each of the independent claims (unless the application is a design application);

6.5. a showing of where each limitation of the claims finds support under 35 USC 112, first paragraph, in the written description of the specification. If applicable, the showing must also identify: (1) each means- (or step) plus-function claim element that invokes consideration under 35 USC 112, sixth paragraph; and (2) the structure, material, or acts in the specification that corresponds to each means- (or step) plus-function claim element that invokes consideration under 35 USC 112, sixth paragraph; if the application claims the benefit of one or more applications under title 35, United States Code, the showing must also include where each limitation of the claims finds support under 35 USC 112, first paragraph, in each such application in which such supports exists;

6.6. an identification of any cited references that may be disqualified under 35 USC 103(c).

REVIEW OF FACTS

The conditions regarding the application (section I, subsections 1-4) discussed above are considered to have been met. Additionally, the conditions regarding the petition, section II, subsections 1-5, are considered to have been met. However, the petition fails to comply with condition II, subsection 6.

With respect to the references discussed in the Accelerated Examination Support Document (AESD) on pages 2-3, petitioner has failed to identify where each and every limitation of the claims are disclosed in the cited references, for example by column and line. Applicant is required to show how the cited references correspond to the present claims, for example by mapping each and every claim limitation to the corresponding teaching in the cited reference.

Therefore, the petition fails to meet the required conditions to be accorded special status under the accelerated examination procedure.

DECISION

For the above-stated reasons, the petition is dismissed. The application will therefore be taken up by the examiner in its regular turn.

Petitioner is given a single opportunity to perfect the petition. Any request for reconsideration of this decision must be submitted within 1 (one) month or 30 (thirty) days, whichever is longer, (no extension of time under 37 CFR 1.136(a)) from the date of this decision in order to be considered timely. Any request for reconsideration must address the deficiencies indicated above.

Petitioner is reminded that, upon granting of the special status of the application on request for reconsideration, the application will be processed expeditiously. However, due to the dismissal of the instant petition, examination may not be completed within twelve months of the filing date of the application.

Any inquiry regarding this decision should be directed to Christine Tierney, Quality Assurance Specialist, at (571) 272-1055.

/Christine Tierney/

Christine Tierney
Quality Assurance Specialist
Technology Center 1700

UNITED STATES PATENT AND TRADEMARK OFFICE

UNITED STATES DEPARTMENT OF COMMERCE
United States Patent and Trademark Office
Address: COMMISSIONER FOR PATENTS
P.O. Box 1450
Alexandria, Virginia 22313-1450
www.uspto.gov

APPLICATION NO.	FILING DATE	FIRST NAMED INVENTOR	ATTORNEY DOCKET NO.	CONFIRMATION NO.
12/058,724	03/30/2008	Nancy Chenxin Zhou	BUR920070242US1	3754

76055 7590 07/10/2008
PRTSI, INC
4661 CARISBROOKE LN
FAIRFAX, VA 22030

EXAMINER

ART UNIT	PAPER NUMBER
1795	

MAIL DATE	DELIVERY MODE
07/10/2008	PAPER

Please find below and/or attached an Office communication concerning this application or proceeding.

The time period for reply, if any, is set in the attached communication.

UNITED STATES PATENT AND TRADEMARK OFFICE

Commissioner for Patents
United States Patent and Trademark Office
P.O. Box 1450
Alexandria, VA 22313-1450
www.uspto.gov

CST

7-10-08

In re application of Nancy Chenxin Zhou et al Serial No. 12/058,724 Filed: March 30, 2008 For: METHOD FOR REDUCING PHOTO-MASK DISTORTION	DECISION ON PETITION TO MAKE SPECIAL

This is a decision on the Request for Reconsideration of Petition to Make Special under the Accelerated Examination Program filed on June 27, 2008 to make the above-identified application special.

The petition to make the application special is **GRANTED.**

The application is eligible for accelerated examination and the petition complies with the conditions for granting the application special status pursuant to the "Change to Practice for Petitions in Patent Applications to Make Special and for Accelerated Examination" published June 26, 2006, in the Federal Register. (71 Fed. Reg. 36323).

The prosecution of the instant application will be conducted expeditiously according to the following guidelines.

1. The application will be docketed to an examiner and taken up for action within two weeks of the date of this decision.

2. Restriction Practice:
   If the examiner determines that the claims are not directed to a single invention, a telephone request to elect one single invention will be made pursuant to MPEP 812.01. As a prerequisite to the grant of this petition, the applicant has agreed to make an oral election, by telephone, without traverse. If the applicant refuses to make an election without traverse, or the examiner cannot reach the applicant after a reasonable effort, the examiner will treat the first claimed invention (invention defined by claim 1) as having being constructively elected without traverse for examination.

3. Office action:
   If it is determined that, after appropriate consultation, there is a potential rejection or any other issue to be addressed, the examiner will telephone the applicant and arrange an interview to discuss and resolve the issue. An Office action, other than a Notice of Allowance and Fee(s) Due (Notice of Allowance), will not be issued unless either: 1) an interview was conducted but did not result in agreed to action that places the application in condition for allowance, or, 2) a determination is made that an interview would be unlikely to result in the application being placed in condition for allowance, and 3) an internal conference has been held to review any rejection of any claim.

4. Time for Reply:
   An Office action other than a Notice of Allowance or a final Office action will set a shortened statutory period of one month or thirty days, whichever is longer, for reply with no extension of time available under 37 CFR 1.136(a). Failure to timely file a reply within this non-extendible period for reply will result in the abandonment of the application.

5. Reply by Applicant:
   A timely reply to an Office action other than the Notice of Allowance must be submitted electronically via EFS or EFS-web and limited to addressing the rejections, objections and requirement made. Any amendment that attempts to: 1) add claims which would result in more than three pending independent claims or more than twenty pending total claims; 2) present claims not encompassed by the pre-examination search or an updated accelerated examination support document; or 3) present claims that are directed a non-elected invention or an invention other than that previously claimed and examined in the application, will be treated as not fully responsive and will not be entered.

   For any amendment to the claims (including any new claim) that is not encompassed by the accelerated examination support document, applicant must provide an updated accelerated examination support document that encompasses the amended or new claims at the time of filing of the amendment.

   To proceed expeditiously with the examination, it is recommended that a reply with amendments made to any claim or with any new claim being added be accompanied by an updated accelerated examination support document or a statement explaining how the amended or new claim is supported by the original accelerated examination support document.

6. Information Disclosure Statement (IDS):
   Any IDS filed during prosecution must be submitted electronically via EFS or EFS-web, accompanied by an updated accelerated examination support document, and be in compliance with 37 CFR 1.97 and 1.98.

7. Post-Allowance Processing:
   To expedite processing of the allowed application into a patent, the applicant must: 1) pay the required fees within one month of the date of the Notice of Allowance, and 2) not file any post allowance papers not required by the Office. In no event may the issue fee be paid and accepted later than three months from the date of the Notice of Allowance.

8. After-Final and Appeal Procedures:
   To expedite prosecution, after receiving the final Office action, applicant must: 1) promptly file a notice of appeal, an appeal brief and appeal fees; and 2) not request a pre-appeal brief conference.

   Any amendment, affidavit or other evidence filed after final Office action must comply with applicable rules and the requirements outlined in numbered paragraphs 5 and 6 above.

   On appeal, the application will proceed according to normal appeal procedures. After appeal, the application will again be treated special.

9. Proceedings Outside the Normal Examination Process:
   If the application becomes involved in a proceeding that is outside the normal examination process (e.g., a secrecy order, national security review, interference proceeding, petitions under 37 CFR 1.181, 182 or 183), the application will be treated special before and after such proceeding.

10. Final Disposition:
    The twelve month goal of this accelerated examination procedure ends with a final disposition. The mailing of a final Office action, a Notice of Allowance, the filing of a Notice of Appeal, or the filing of a Request for Continued Examination (RCE) is the final disposition.

If, during prosecution, a paper is not filed electronically using EFS-web, a reply is filed but is not fully responsive, the application is involved in an appeal, or a proceeding outside normal examination process, the application will still be examined expeditiously, however, the final disposition may occur more than twelve months from the filing of the application.

Any inquiry regarding this decision should be directed to Christine Tierney, Quality Assurance Specialist, at (571) 272-1055.

/Christine Tierney/

Christine Tierney
Quality Assurance Specialist
Technology Center 1700

UNITED STATES PATENT AND TRADEMARK OFFICE

UNITED STATES DEPARTMENT OF COMMERCE
United States Patent and Trademark Office
Address: COMMISSIONER FOR PATENTS
P.O. Box 1450
Alexandria, Virginia 22313-1450
www.uspto.gov

APPLICATION NO.	FILING DATE	FIRST NAMED INVENTOR	ATTORNEY DOCKET NO.	CONFIRMATION NO.
12/058,739	03/30/2008	Patrick Govang	94182.115707-US2	3788

23469 7590 02/16/2010
Jaekle Fleischmann & Mugel, LLP
12 Fountain Plaza
Buffalo, NY 14202-2292

EXAMINER
KHATRI, PRASHANT J

ART UNIT	PAPER NUMBER
1794	

NOTIFICATION DATE	DELIVERY MODE
02/16/2010	ELECTRONIC

Please find below and/or attached an Office communication concerning this application or proceeding.

The time period for reply, if any, is set in the attached communication.

Notice of the Office communication was sent electronically on above-indicated "Notification Date" to the following e-mail address(es):

plavoie@jaeckle.com
patents@jaeckle.com
mvorndran@jaeckle.com

UNITED STATES PATENT AND TRADEMARK OFFICE

Commissioner for Patents
United States Patent and Trademark Office
P.O. Box 1450
Alexandria, VA 22313-1450
www.uspto.gov

Jaekle Fleischmann & Mugel, LLP
12 Fountain Plaza
Buffalo NY 14202-2292

FEB 16 2010

In re Application of	:	
Govang et al.	:	DECISION ON PETITION
Application No. 12/058,739	:	TO MAKE SPECIAL UNDER
Filed: 3/30/2008	:	THE GREEN TECHNOLOGY
Attorney Docket No. **94182.115707-US2**	:	PILOT PROGRAM

This is a decision on the petition under 37 CFR 1.102, filed 1/7/2010, to make the above-identified application special under the pilot program for applications pertaining to Green Technologies as set forth 74 Federal Register Notice 64666 (December 8, 2009).

The petition is **DISMISSED**.

If reconsideration of this decision is desired, a petition for reconsideration must be filed within ONE (1) MONTH OR THIRTY (30) DAYS from the mail date of this decision, whichever is longer. No extension of this time limit can be granted under 37 CFR 1.136(a) or (b). The petition for reconsideration should include an exhaustive attempt to provide the lacking item(s) noted below, since, after a decision on the petition for reconsideration, no further reconsideration or review of the matter will be undertaken by the Director.

A grantable petition to make an application special under 37 CFR 1.102 and the pilot program as set forth in 74 FR 64666 must be directed to a nonprovisional application filed under 35 USC 111(a) or be a national stage entry under 35 USC 371, exclusive of any reissue applications and be filed prior to the date of the notice, December 8, 2009.

In order to qualify for special status, the following requirements must be met. 1) The application must be classified in one of the eligible US classifications listed in section VI of the notice. 2) The application must have no more than 3 independent claims and no more than 20 total claims. 3) The application must not contain any multiple dependent claims. 4) The petition must state the basis for seeking special status, i.e., the claimed invention either: A) materially enhances the quality of the environment or B) materially contributes to: i) the discovery or development of renewable energy resources, ii) the more efficient utilization and conservation of energy resources, or iii) greenhouse gas emission reduction. 5) If the disclosure is not clear on its face that the claimed invention materially contributes under category (A) or (B), the petition must be accompanied by a statement by the applicant, assignee, or an attorney/agent registered to practice

before the Office explaining how the materiality standard is met. 6) A statement that applicant will agree to make an election without traverse in a telephonic interview if a restriction requirement is made by the examiner. 7) The petition to make special must be filed electronically. 8) The petition must be filed at least one day prior to the date that a first Office Action appears in the Patent Application Information Retrieval (PAIR) system. 9) The petition must be accompanied by a request for early publication in compliance with 37 CFR 1.219 and include the publication fee as set forth in 37 CFR 1.18(d).

The requirement for a fee for consideration of the petition to make special for applications pertaining to Green Technologies has been waived.

The petition lacks item(s) 1.

In regard to item 1, petitioner should note that this application has been classified in an area (USPC 428/220.000) that is not one of the eligible US classifications listed in section VI of the notice. Therefore, this application is not eligible for the Pilot Program. The classification limitations are purposefully made to be narrow for the Pilot Program; however, these may be expanded based upon the success of the Pilot Program. Petitioner may file a preliminary amendment that would cause this application to be classified elsewhere. However, while petitioner may suggest a classification (see, e.g., MPEP 708.02(a)(VII)(C)), the application will be assigned to the most appropriate classification based upon current U.S. classification guidelines. Furthermore, a petition for the Pilot Program should not be filed until and unless all of the requirements set forth in the Notice are met; i.e., a petition should not be filed for an application that is currently classified outside the eligible classifications set forth in the Notice.

Any reconsideration of this decision should be submitted through the USPTO electronic filing system, EFS-Web, and selecting the document description of "Petition for Green Tech Pilot" on the EFS-Web screen.

Telephone inquiries concerning this decision should be directed to Tom Dunn at 571-272-1171.

The application is being forwarded to the Technology Center Art Unit 1794 for action in its regular turn.

/Tom Dunn/

Tom Dunn
Quality Assurance Specialist
Technology Center 1700

UNITED STATES PATENT AND TRADEMARK OFFICE

UNITED STATES DEPARTMENT OF COMMERCE
United States Patent and Trademark Office
Address: COMMISSIONER FOR PATENTS
P.O. Box 1450
Alexandria, Virginia 22313-1450
www.uspto.gov

APPLICATION NO.	FILING DATE	FIRST NAMED INVENTOR	ATTORNEY DOCKET NO.	CONFIRMATION NO.
12/058,739	03/30/2008	Patrick Govang	94182.115707-US2	3788

23469 7590 06/28/2010
Jaekle Fleischmann & Mugel, LLP
12 Fountain Plaza
Buffalo, NY 14202-2292

EXAMINER
KHATRI, PRASHANT J

ART UNIT	PAPER NUMBER
1783	

NOTIFICATION DATE	DELIVERY MODE
06/28/2010	ELECTRONIC

Please find below and/or attached an Office communication concerning this application or proceeding.

The time period for reply, if any, is set in the attached communication.

Notice of the Office communication was sent electronically on above-indicated "Notification Date" to the following e-mail address(es):

plavoie@jaeckle.com
patents@jaeckle.com
mvorndran@jaeckle.com

UNITED STATES PATENT AND TRADEMARK OFFICE

Commissioner for Patents
United States Patent and Trademark Office
P.O. Box 1450
Alexandria, VA 22313-1450
www.uspto.gov

Jaekle Fleischmann & Mugel, LLP
12 Fountain Plaza
Buffalo NY 14202-2292

JUN 28 2010

In re Application of	:	
Govang et al.	:	DECISION ON PETITION
Application No. 12/058,739	:	TO MAKE SPECIAL UNDER
Filed: 3/30/2008	:	THE GREEN TECHNOLOGY
Attorney Docket No. **94182.115707-US2**	:	PILOT PROGRAM

This is a decision on the petition under 37 CFR 1.102, filed 6/15/2010, to make the above-identified application special under the pilot program for applications pertaining to Green Technologies as set forth 74 Federal Register Notice 64666 (December 8, 2009).

The petition is **GRANTED**.

A grantable petition to make an application special under 37 CFR 1.102 and the pilot program as set forth in 74 FR 64666 must be directed to a nonprovisional application filed under 35 USC 111(a) or be a national stage entry under 35 USC 371, exclusive of any reissue applications and be filed prior to the date of the notice, December 8, 2009.

In order to qualify for special status, the following requirements must be met. 1) The application must have no more than 3 independent claims and no more than 20 total claims. 2) The application must not contain any multiple dependent claims. 3) The petition must state the basis for seeking special status, i.e., the claimed invention either: A) materially enhances the quality of the environment or B) materially contributes to: i) the discovery or development of renewable energy resources, ii) the more efficient utilization and conservation of energy resources, or iii) greenhouse gas emission reduction. 4) If the disclosure is not clear on its face that the claimed invention materially contributes under category (A) or (B), the petition must be accompanied by a statement by the applicant, assignee, or an attorney/agent registered to practice before the Office explaining how the materiality standard is met. 5) A statement that applicant will agree to make an election without traverse in a telephonic interview if a restriction requirement is made by the examiner. 6) The petition to make special must be filed electronically. 7) The petition must be filed at least one day prior to the date that a first Office Action appears in the Patent Application Information Retrieval (PAIR) system. 8) The petition must be accompanied by a request for early publication in compliance with 37 CFR 1.219 and include the publication fee as set forth in 37 CFR 1.18(d).

The requirement for a fee for consideration of the petition to make special for applications pertaining to Green Technologies has been waived.

The instant petition complies with items 1 – 8 above. Accordingly, the above-identified application has been accorded "special" status.

Telephone inquires concerning this decision should be directed to Tom Dunn at 571-272-1171.

The application is being forwarded to the Technology Center Art Unit 1783 for action on the merits commensurate with this decision.

/Tom Dunn/

Tom Dunn
Quality Assurance Specialist
Technology Center 1700

UNITED STATES PATENT AND TRADEMARK OFFICE

UNITED STATES DEPARTMENT OF COMMERCE
United States Patent and Trademark Office
Address: COMMISSIONER FOR PATENTS
P.O. Box 1450
Alexandria, Virginia 22313-1450
www.uspto.gov

APPLICATION NO.	FILING DATE	FIRST NAMED INVENTOR	ATTORNEY DOCKET NO.	CONFIRMATION NO.
12/058,740	03/30/2008	Makoto Nagao	Q106950	3789

7590 01/04/2010
SUGHRUE MION, PLLC
2100 PENNSYLVANIA AVENUE, N.W.
SUITE 800
WASHINGTON, DC 20037

EXAMINER
YOUNG, WAYNE R

ART UNIT	PAPER NUMBER
2627	

NOTIFICATION DATE	DELIVERY MODE
01/04/2010	ELECTRONIC

DECISION GRANTING PETITION UNDER 37 CFR 1.138(d)

The declaration of express abandonment is recognized

This is in response to the petition under 37 CFR 1.138(d), requesting for a refund of any previously paid search fee and excess claims fee in the above-identified application.

The petition is granted.

The express abandonment is recognized. Any previously paid search fee and excess claims fee are hereby refunded.

Telephone inquiries should be directed to the Office of Data Management at (571) 272-4200.

Nimi Farmer

Patent Publication Branch
Office of Data Management

Adjustment date: 12/31/2009 NFARMER
03/31/2008 INTEFSJ 00000425 194800 12058740
02 FC:1111 510.00 CR
04 FC:1201 420.00 CR

FORM PET651G (Rev. 08/07)

UNITED STATES PATENT AND TRADEMARK OFFICE

Commissioner for Patents
United States Patent and Trademark Office
P.O. Box 1450
Alexandria, VA 22313-1450
www.uspto.gov

SHERMAN D. PERNIA, ESQ, P.C.
950 GEMINI DRIVE, SUITE 5
HOUSTON TX 77058-2730

MAILED

MAR 25 2009

OFFICE OF PETITIONS

In re Application of
Maria A. Navarro et al
Application No. 12/058,741
Filed: March 30, 2008
Attorney Docket No. PUS-N001-269

DECISION ON PETITION

This is a decision on the petition under the unintentional provisions of 37 CFR 1.137(b), filed February 27, 2009, to revive the above-identified application.

The petition is **GRANTED**.

The petition satisfies the conditions for revival pursuant to the provisions of 37 CFR 1.137(b) in that (1) the reply in the form of an executed declaration/surcharge; (2) the petition fee; and (3) the required statement of unintentional delay have been received. Accordingly, the reply to the Notice mailed April 21, 2008, is accepted as having been unintentionally delayed.

Telephone inquiries concerning this decision should be directed to the undersigned at (571) 272-3208.

This application is being referred to the Office of Patent Application Processing for pre-examination processing.

Karen Creasy
Petitions Examiner
Office of Petitions

UNITED STATES PATENT AND TRADEMARK OFFICE

Commissioner for Patents
United States Patent and Trademark Office
P.O. Box 1450
Alexandria, VA 22313-1450
www.uspto.gov

MAIL

MAY 01 2008
DIRECTOR'S OFFICE
TECHNOLOGY CENTER 2600

JEROME D. JACKSON (JACKSON PATENT LAW OFFICE)
211 N. UNION STREET, SUITE 100
ALEXANDRIA VA 22314

In re Application of: NADEHARA, SHUHEI Serial No.: 12/058,744 Filed: March 30, 2008 Title: **HEAD POSITION DETECTOR WITH OPTICAL SLIT PATTERN**	DECISION ON PETITION TO MAKE SPECIAL FOR NEW APPLICATION UNDER 37 C.F.R. § 1.102 & M.P.E.P. § 708.02

This is a decision on the petition filed on March 30, 2008 to make the above-identified application special for accelerated examination procedure under 37 C.F.R. § 1.102(d).

The petition to make the application special is **DISMISSED**.

REGULATION AND PRACTICE

A grantable petition to make special under 37 C.F.R. § 1.102(d) and pursuant to the "Change to Practice for Petitions in Patent Applications to Make Special and for Accelerated Examination" published in the Federal Register on June 26, 2006 (71 Fed. Reg. 36323), must satisfy the following conditions:

I. Conditions Regarding the Application:

1. the application must be a non-reissue utility or design application filed under 37 CFR 1.111(a);
2. the application, the petition and the required fees must be filed electronically using the USPTO's electronic filing system (EFS), or EFS-web; if not filed electronically, a statement asserting that EFS and EFS-web were not available during the normal business hours.
3. at the time of filing, the application must be complete under 37 CFR 1.51 and in condition for examination;
4. the application must contain three or fewer independent claims and twenty or fewer total claims and the claims must be directed to a single invention.

II. Conditions Regarding the Petition:

The petition must:

1. be filed with the application;

2. include a statement that applicant agrees not to separately argue the patentability of any independent claim during any appeal in the application;

3. include a statement that applicant agrees to make an election without traverse in a telephone interview.

4. include a statement that applicant agrees to conduct such an interview when requested by the examiner.

5. include a statement, made based on a good faith belief, that a preexamination search in compliance with the following requirements, was conducted, including an identification of the filed of search by United States class and subclass, where applicable, and for database searches, the search logic or chemical structure or sequence used as a query, the name of the file(s) searched and the database service, and the date of the search.

The preexamination search must:

5.1 involve U.S. patents and patent application publications, foreign patent documents, and non-patent literature, unless the applicant can justify with reasonable certainty that no references more pertinent than those already identified are likely to be found in the eliminated sources and includes such a justification with this statement;

5.2. be directed to the claimed invention and encompass all of the features of the claims, giving the claims the broadest reasonable interpretation;

5.3. encompass the disclosed features that may be claimed.

6. must provide in support of the petition an accelerated examination support document. An accelerated examination support document must include:

6.1. an information disclosure statement (IDS) in compliance with 37 CFR 1.98 citing each reference deemed most closely related to the subject matter of each of the claims;

6.2. an identification of all the limitations in the claims that are disclosed by the reference specifying where the limitation is disclosed in the cited reference;

6.3. a detailed explanation of how each of the claims are patentable over the references cited with particularity required by 37 CFR 1.111(b) and (c);

6.4. a concise statement of the utility of the invention as defined in each of the independent claims (unless the application is a design application);

6.5. a showing of where each limitation of the claims finds support under 35 USC 112, first paragraph, in the written description of the specification. If applicable, the showing must also identify: (1) each means- (or step) plus-function claim element that invokes consideration under 35 USC 112, sixth paragraph; and (2) the structure, material, or acts in the specification that corresponds to each means- (or step) plus-function claim element that invokes consideration under 35 USC 112, sixth paragraph; if the application claims the benefit of one or more applications under title 35, United States Code, the showing must also include where each limitation of the claims finds support under 35 USC 112, first paragraph, in each such application in which such supports exists;

6.6. an identification of any cited references that may be disqualified under 35 USC 103(c).

REVIEW OF FACTS

The conditions set forth under section I. above are considered to have been met. However, the petition fails to comply with conditions set forth under section II. items 5.2 and 5.3.

For these reasons cited above, the petition fails to meet the required conditions to be accorded special status under the accelerated examination procedure.

Regarding the requirement in item 5.2 and 5.3 above, the preexamination search document provided with the instant petition is deficient as follows: The search was too narrow. Search should have additionally included 360/77.03 (claims recite optical, i.e, nonmagnetic, position sensing of transducer, which could be either for track centering 360/77.01+or track changing 360/78.01+).
Regarding search strategy, the claims are not limited to "magnetic", so the search phrase "magnetic tape" should be "tape".

If any request for reconsideration is filed, an updated preexamination search must be conducted as per items 5.2 and 5.3 above, and the Preexamination Search Document must be amended to indicate such; a new Information Disclosure Statement should be filed to cite any newly found prior art, and the Accelerated Examination Support Document must also be amended to include the necessary reference and discussion of any newly found and cited prior art in accordance with all of items 6 through 6.6 above.

DECISION

For the above-stated reasons, the petition is **dismissed**. The application will therefore be taken up by the examiner for action in its regular turn.

Petitioner is given a single opportunity to perfect the petition. Any request for reconsideration of this decision must be submitted within 1 (one) month or 30 (thirty) days, whichever is longer, (no extension of time under 37 CFR 1.136(a)) from the date of this decision in order to be considered timely. Any request for reconsideration must address the deficiencies indicated above.

Petitioner is reminded that, upon granting of the special status of the application on request for reconsideration, the application will be processed expeditiously. However, due to the dismissal of the instant petition, examination may not be completed within twelve months of the filing date of the application.

Any inquiry regarding this decision should be directed to Michael Horabik, Quality Assurance Specialist, at (571) 272-3068.

Michael Horabik
Quality Assurance Specialist
Technology Center 2600
Communications

United States Patent and Trademark Office

~~Commissioner for Patents~~
United States Patent and Trademark Office
P.O. Box 1450
Alexandria, VA 22313-1450
www.uspto.gov

MAIL

JUN 23 2008

DIRECTOR'S OFFICE
TECHNOLOGY CENTER 2600

JEROME D. JACKSON (JACKSON PATENT LAW OFFICE)
211 N. UNION STREET, SUITE 100
ALEXANDRIA VA 22314

In re Application of:
NADEHARA, SHUHEI
Serial No.: 12/058,744
Filed: March 30, 2008

Title: **HEAD POSITION DETECTOR WITH OPTICAL SLIT PATTERN**

DECISION ON PETITION TO MAKE SPECIAL FOR NEW APPLICATION UNDER 37 C.F.R. § 1.102 & M.P.E.P. § 708.02

This is a decision on the petition filed on May 30, 2008 requesting reconsideration to make the above-identified application special for accelerated examination procedure under 37 C.F.R. § 1.102(d).

All of the requirements to correct the deficiencies outlined in the petition decision mailed May 01, 2008 have been met.

The petition to make the application special is **GRANTED**.

The application is eligible for accelerated examination and the petition complies with the conditions for granting the application special status pursuant to the "Change to Practice for Petitions in Patent Applications to Make Special and for Accelerated Examination" published June 26, 2006, in the Federal Register. (71 Fed. Reg. 36323).

The prosecution of the instant application will be conducted expeditiously according to the following guidelines.

1. The application will be docketed to an examiner and taken up for action within two weeks of the date of this decision.

2. Restriction Practice:
   If the examiner determines that the claims are not directed to a single invention, a telephone request to elect one single invention will be made pursuant to MPEP 812.01. As a prerequisite to the grant of this petition, the applicant has agreed to make an oral election, by telephone, without traverse. If the applicant refuses to make an election without traverse, or the examiner cannot reach the applicant after a reasonable effort, the

examiner will treat the first claimed invention (invention defined by claim 1) as having being constructively elected without traverse for examination.

3. Office action:
If it is determined that, after appropriate consultation, there is a potential rejection or any other issue to be addressed, the examiner will telephone the applicant and arrange an interview to discuss and resolve the issue. An Office action, other than a Notice of Allowance and Fee(s) Due (Notice of Allowance), will not be issued unless either: 1) an interview was conducted but did not result in agreed to action that places the application in condition for allowance, or, 2) a determination is made that an interview would be unlikely to result in the application being placed in condition for allowance, and 3) an internal conference has been held to review any rejection of any claim.

4. Time for Reply:
An Office action other than a Notice of Allowance or a final Office action will set a shortened statutory period of one month or thirty days, whichever is longer, for reply with no extension of time available under 37 CFR 1.136(a). Failure to timely file a reply within this non-extendible period for reply will result in the abandonment of the application.

5. Reply by Applicant:
A timely reply to an Office action other than the Notice of Allowance must be submitted electronically via EFS or EFS-web and limited to addressing the rejections, objections and requirement made. Any amendment that attempts to: 1) add claims which would result in more than three pending independent claims or more than twenty pending total claims; 2) present claims not encompassed by the pre-examination search or an updated accelerated examination support document; or 3) present claims that are directed a non-elected invention or an invention other than that previously claimed and examined in the application, will be treated as not fully responsive and will not be entered.

   For any amendment to the claims (including any new claim) that is not encompassed by the accelerated examination support document, applicant must provide an updated accelerated examination support document that encompasses the amended or new claims at the time of filing of the amendment.

   To proceed expeditiously with the examination, it is recommended that a reply with amendments made to any claim or with any new claim being added be accompanied by an updated accelerated examination support document or a statement explaining how the amended or new claim is supported by the original accelerated examination support document.

6. Information Disclosure Statement (IDS):
Any IDS filed during prosecution must be submitted electronically via EFS or EFS-web, accompanied by an updated accelerated examination support document, and be in compliance with 37 CFR 1.97 and 1.98.

7. Post-Allowance Processing:

To expedite processing of the allowed application into a patent, the applicant must: 1) pay the required fees within one month of the date of the Notice of Allowance, and 2) not file any post allowance papers not required by the Office. In no event may the issue fee be paid and accepted later than three months from the date of the Notice of Allowance.

8. After-Final and Appeal Procedures:
   To expedite prosecution, after receiving the final Office action, applicant must: 1) promptly file a notice of appeal, an appeal brief and appeal fees; and 2) not request a pre-appeal brief conference.

   Any amendment, affidavit or other evidence filed after final Office action must comply with applicable rules and the requirements outlined in numbered paragraphs 5 and 6 above.

   On appeal, the application will proceed according to normal appeal procedures. After appeal, the application will again be treated special.

9. Proceedings Outside the Normal Examination Process:
   If the application becomes involved in a proceeding that is outside the normal examination process (e.g., a secrecy order, national security review, interference proceeding, petitions under 37 CFR 1.181, 182 or 183), the application will be treated special before and after such proceeding.

10. Final Disposition:
    The twelve month goal of this accelerated examination procedure ends with a final disposition. The mailing of a final Office action, a Notice of Allowance, the filing of a Notice of Appeal, or the filing of a Request for Continued Examination (RCE) is the final disposition.

If, during prosecution, a paper is not filed electronically using EFS-web, a reply is filed but is not fully responsive, the application is involved in an appeal, or a proceeding outside normal examination process, the application will still be examined expeditiously, however, the final disposition may occur more than twelve months from the filing of the application.

Any inquiry regarding this decision should be directed to Michael Horabik, Quality Assurance Specialist, at (571) 272-3068.

Michael Horabik
Quality Assurance Specialist
Technology Center 2600
Communications

UNITED STATES PATENT AND TRADEMARK OFFICE

UNITED STATES DEPARTMENT OF COMMERCE
United States Patent and Trademark Office
Address: COMMISSIONER FOR PATENTS
P.O. Box 1450
Alexandria, Virginia 22313-1450
www.uspto.gov

APPLICATION NO.	FILING DATE	FIRST NAMED INVENTOR	ATTORNEY DOCKET NO.	CONFIRMATION NO.
12/058,764	03/31/2008	Anthony Michael Baca	1000-1964	3844

64064 7590 06/09/2010
ORTIZ & LOPEZ, PLLC
P.O. BOX 4484
ALBUQUERQUE, NM 87196-4484

EXAMINER
PONOMARENKO, NICHOLAS

ART UNIT	PAPER NUMBER
2839	

MAIL DATE	DELIVERY MODE
06/09/2010	PAPER

Please find below and/or attached an Office communication concerning this application or proceeding.

The time period for reply, if any, is set in the attached communication.

UNITED STATES PATENT AND TRADEMARK OFFICE

Commissioner for Patents
United States Patent and Trademark Office
P.O. Box 1450
Alexandria, VA 22313-1450
www.uspto.gov

ORTIZ & LOPEZ, PLLC
P.O. BOX 4484
ALBUQUERQUE NM 87196-4484

In re Application of	:	
BACA et al.	:	DECISION ON PETITION
Application No. 12/058,764	:	TO MAKE SPECIAL UNDER
Filed: 31 March 2008	:	THE GREEN TECHNOLOGY
Attorney Docket No. 1000-1964	:	PILOT PROGRAM

This is a decision on the petition under 37 CFR 1.102, filed 27 May 2010, to make the above-identified application special under the pilot program for applications pertaining to Green Technologies as set forth 74 Federal Register Notice 64666 (December 8, 2009).

The petition is **DISMISSED**.

If reconsideration of this decision is desired, a petition for reconsideration must be filed within ONE (1) MONTH OR THIRTY (30) DAYS from the mail date of this decision, whichever is longer. No extension of this time limit can be granted under 37 CFR 1.136(a) or (b). The petition for reconsideration should include an exhaustive attempt to provide the lacking item(s) noted below, since, after a decision on the petition for reconsideration, no further reconsideration or review of the matter will be undertaken by the Director.

A grantable petition to make an application special under 37 CFR 1.102 and the pilot program as set forth in 74 FR 64666 must be directed to a nonprovisional application filed under 35 USC 111(a) or be a national stage entry under 35 USC 371, exclusive of any reissue applications and be filed prior to the date of the notice, December 8, 2009.

In order to qualify for special status, the following requirements must be met. 1) The application must have no more than 3 independent claims and no more than 20 total claims. 2) The application must not contain any multiple dependent claims. 3) The petition must state the basis for seeking special status, i.e., the claimed invention either: A) materially enhances the quality of the environment or B) materially contributes to: i) the discovery or development of renewable energy resources, ii) the more efficient utilization and conservation of energy resources, or iii) greenhouse gas emission reduction. 4) If the disclosure is not clear on its face that the claimed invention materially contributes under category (A) or (B), the petition must be accompanied by a statement by the applicant, assignee, or an attorney/agent registered to practice before the Office explaining how the materiality standard is met. 5) A statement that applicant will agree to make an election without traverse in a telephonic interview if a restriction requirement is made by the examiner. 6) The petition to make special must be filed electronically. 7) The petition

must be filed at least one day prior to the date that a first Office Action appears in the Patent Application Information Retrieval (PAIR) system. 8) The petition must be accompanied by a request for early publication in compliance with 37 CFR 1.219 and include the publication fee as set forth in 37 CFR 1.18(d).

The requirement for a fee for consideration of the petition to make special for applications pertaining to Green Technologies has been waived.

The petition lacks items 3 and 8.

In regard to item 3, petitioner should note that the instant petition fails to state the basis for the special status (i.e., whether the instant invention (1) materially enhances the quality of the environment or materially contributes to (2) development of renewable energy resources or energy conservation, or (3) greenhouse gas reduction) as required by sections II and III of the notice

In regard to item 8, petitioner should note that publication fee as set forth in 37 CFR 1.18(d) has not been received.

Any reconsideration of this decision should be submitted through the USPTO electronic filing system, EFS-Web, and selecting the document description of "Petition for Green Tech Pilot" on the EFS-Web screen.

Telephone inquires concerning this decision should be directed to Lee W. Young at 571-272-4549.

The application is being forwarded to the Technology Center Art Unit 2839 for action on the merits commensurate with this decision.

Lee W. Young
Quality Assurance Specialist
Technology Center 2800

UNITED STATES PATENT AND TRADEMARK OFFICE

UNITED STATES DEPARTMENT OF COMMERCE
United States Patent and Trademark Office
Address: COMMISSIONER FOR PATENTS
P.O. Box 1450
Alexandria, Virginia 22313-1450
www.uspto.gov

APPLICATION NO.	FILING DATE	FIRST NAMED INVENTOR	ATTORNEY DOCKET NO.	CONFIRMATION NO.
12/058,766	03/31/2008	Kah Khim Wee	70070358-01	3846

7590 12/09/2009
AGILENT TECHNOLOGIES INC.
INTELLECTUAL PROPERTY ADMINISTRATION,LEGAL DEPT.
MS BLDG. E P.O. BOX 7599
LOVELAND, CO 80537

EXAMINER
AMAYA, CARLOS DAVID

ART UNIT	PAPER NUMBER
2836	

NOTIFICATION DATE	DELIVERY MODE
12/09/2009	ELECTRONIC

DECISION GRANTING PETITION UNDER 37 CFR 1.138(d)

The declaration of express abandonment is recognized

This is in response to the petition under 37 CFR 1.138(d), requesting for a refund of any previously paid search fee and excess claims fee in the above-identified application.

The petition is granted.

The express abandonment is recognized. Any previously paid search fee and excess claims fee are hereby refunded.

Telephone inquiries should be directed to the Office of Data Management at (571) 272-4200.

Betty Powell

Patent Publication Branch
Office of Data Management

FORM PET651G (Rev. 08/07)

UNITED STATES PATENT AND TRADEMARK OFFICE

UNITED STATES DEPARTMENT OF COMMERCE
United States Patent and Trademark Office
Address: COMMISSIONER FOR PATENTS
P.O. Box 1450
Alexandria, Virginia 22313-1450
www.uspto.gov

APPLICATION NO.	FILING DATE	FIRST NAMED INVENTOR	ATTORNEY DOCKET NO.	CONFIRMATION NO.
12/058,788	03/31/2008	Warren R. Davis	POU920070373US1	3886

76793 7590 11/18/2008
Cahn & Samuels, LLP
1100 17th St., NW, Ste. 401
Washington, DC 20036

EXAMINER

ART UNIT	PAPER NUMBER
2113	

MAIL DATE	DELIVERY MODE
11/18/2008	PAPER

Please find below and/or attached an Office communication concerning this application or proceeding.

The time period for reply, if any, is set in the attached communication.

UNITED STATES PATENT AND TRADEMARK OFFICE

Commissioner for Patents
United States Patent and Trademark Office
P.O. Box 1450
Alexandria, VA 22313-1450
www.uspto.gov

11/17/2008

CAHN & SAMUELS, LLP
1100 17TH STREET, NW
SUITE 401
WASHINGTON, DC 20036

In re Application of: Warren R. DAVIS Serial No.: 12/058,788 Filed: March 31, 2008 Docket: POU920070373US1 Title: METHOD FOR TESTING PROCESSOR SUBASSEMBLIES	DECISION ON PETITION TO MAKE SPECIAL FOR NEW APPLICATION UNDER 37 C.F.R. § 1.102 & M.P.E.P. § 708.02

This is a decision on the original petition filed on March 31, 2008 to make the above- identified application special for accelerated examination procedure under 37 C.F.R. § 1.102(d).

The petition to make the application special is **GRANTED**.

The application is eligible for accelerated examination and the petition complies with the conditions for granting the application special status pursuant to the "Change to Practice for Petitions in Patent Applications to Make Special and for Accelerated Examination" published June 26, 2006, in the Federal Register. (71 Fed. Reg. 36323).

The prosecution of the instant application will be conducted expeditiously according to the following guidelines.

1. The application will be docketed to an examiner and taken up for action within two weeks of the date of this decision.

2. Restriction Practice:
   If the examiner determines that the claims are not directed to a single invention, a telephone request to elect one single invention will be made pursuant to MPEP 812.01. As a prerequisite to the grant of this petition, the applicant has agreed to make an oral election, by telephone, without traverse. If the applicant refuses to make an election without traverse, or the examiner cannot reach the applicant after a reasonable effort, the examiner will treat the first claimed invention (invention defined by claim 1) as having being constructively elected without traverse for examination.

3. Office action:
   If it is determined that, after appropriate consultation, there is a potential rejection or any other issue to be addressed, the examiner will telephone the applicant and arrange an interview to discuss and resolve the issue. An Office action, other than a Notice of Allowance and Fee(s) Due (Notice of Allowance), will not be issued unless either: 1) an interview was conducted but did not result in agreed to action that places the application in condition for allowance, or, 2) a determination is made that an interview would be unlikely to result in the application being placed in condition for allowance, and 3) an internal conference has been held to review any rejection of any claim.

4. Time for Reply:
   An Office action other than a Notice of Allowance or a final Office action will set a shortened statutory period of one month or thirty days, whichever is longer, for reply with no extension of time available under 37 CFR 1.136(a). Failure to timely file a reply within this non-extendible period for reply will result in the abandonment of the application.

5. Reply by Applicant:
   A timely reply to an Office action other than the Notice of Allowance must be submitted electronically via EFS or EFS-web and limited to addressing the rejections, objections and requirement made. Any amendment that attempts to: 1) add claims which would result in more than three pending independent claims or more than twenty pending total claims; 2) present claims not encompassed by the pre-examination search or an updated accelerated examination support document; or 3) present claims that are directed a non-elected invention or an invention other than that previously claimed and examined in the application, will be treated as not fully responsive and will not be entered.

   For any amendment to the claims (including any new claim) that is not encompassed by the accelerated examination support document, applicant must provide an updated accelerated examination support document that encompasses the amended or new claims at the time of filing of the amendment.

   To proceed expeditiously with the examination, it is recommended that a reply with amendments made to any claim or with any new claim being added be accompanied by an updated accelerated examination support document or a statement explaining how the amended or new claim is supported by the original accelerated examination support document.

6. Information Disclosure Statement (IDS):
   Any IDS filed during prosecution must be submitted electronically via EFS or EFS-web, accompanied by an updated accelerated examination support document, and be in compliance with 37 CFR 1.97 and 1.98.

7. Post-Allowance Processing:
   To expedite processing of the allowed application into a patent, the applicant must: 1) pay the required fees within one month of the date of the Notice of Allowance, and 2) not file any post allowance papers not required by the Office. In no event may the issue fee be paid and accepted later than three months from the date of the Notice of Allowance.

8. After-Final and Appeal Procedures:
   To expedite prosecution, after receiving the final Office action, applicant must: 1) promptly file a notice of appeal, an appeal brief and appeal fees; and 2) not request a pre-appeal brief conference.

   Any amendment, affidavit or other evidence filed after final Office action must comply with applicable rules and the requirements outlined in numbered paragraphs 5 and 6 above.

   On appeal, the application will proceed according to normal appeal procedures. After appeal, the application will again be treated special.

9. Proceedings Outside the Normal Examination Process:
   If the application becomes involved in a proceeding that is outside the normal examination process (e.g., a secrecy order, national security review, interference proceeding, petitions under 37 CFR 1.181, 182 or 183), the application will be treated special before and after such proceeding.

10. Final Disposition:
    The twelve-month goal of this accelerated examination procedure ends with a final disposition. The mailing of a final Office action, a Notice of Allowance, the filing of a Notice of Appeal, or the filing of a Request for Continued Examination (RCE) is the final disposition.

If, during prosecution, a paper is not filed electronically using EFS-web, a reply is filed but is not fully responsive, the application is involved in an appeal, or a proceeding outside normal examination process, the application will still be examined expeditiously, however, the final disposition may occur more than twelve months from the filing of the application. In addition, Applicant is reminded that due to the dismissal of the previous petition submission, examination may not be completed within twelve months of the filing date of the application.

Any inquiry regarding this decision should be directed to Brian Johnson, Quality Assurance Specialist, at (571) 272-3595. If attempts to reach the undersigned by telephone are unsuccessful, Kakali Chaki, Quality Assurance Specialist, can be reached at (571) 272-3719.

Brian Johnson, WQAS 2110
Technology Center 2100
Computer Architecture, Software and Information Security

DECISION ON PETITION ROUTING SLIP

Application No.: 12058792

Art Unit: 2833

For Director's Secretary:

☐ **Granted** ☐ **Denied** ☑ **Dismissed**

- ☐ Decision to be reviewed and signed by Director
- ☑ Mail Decision & enter decision in Petition Database
- ☑ Forward a copy of the mailed decision to IFW for scanning
- ☐ Enter Paper Nos ____ and the decision in PALM
- ☑ Other

Decision on Accelerated Examination Petition

For TECH Support Staff:

- ☐ Process and enter Paper Nos. ____
- ☐ Charge ____ fee to D.A. No ____
- ☐ Other ____
- ☐ Forward file to ____

SPRE No. 1:	SPRE No. 2:	SPRE No. 3:	SPRE No. 4:
Hien Phan SPRE Jeff-8D55 (571) 272-1606	Jose Dees SPRE Jeff-8D59 (571)272-1569	Clayton E. LaBalle SPRE Jeff-8D51 (571) 272-1594	Ed Westin SPRE Jeff-8D65 (571)272-1638

UNITED STATES PATENT AND TRADEMARK OFFICE

Commissioner for Patents
United States Patent and Trademark Office
P.O. Box 1450
Alexandria, VA 22313-1450
www.uspto.gov

Cahn & Samuels, LLP
1100 17th St., NW, Ste. 401
Washington DC 20036

JUN 10 2008

In re Application of:	:	
Vincent P. Mulligan et al.	:	DECISION ON PETITION TO
Serial No.: 12/058,792	:	MAKE SPECIAL FOR NEW
Filed: March 31, 2008	:	APPLICATION UNDER 37
Docket Number: POU920070372US1	:	C.F.R. § 1.102 & M.P.E.P. § 708.2
Title: COIL CONTACT AND METHOD OF	:	
USING THE SAME AS INTERCONNECT	:	

This is a decision on the petition filed on March 31, 2008 to make the above-identified application special for accelerated examination procedure under 37 C.F.R. § 1.102(d).

The petition to make the application special is **DISMISSED**.

REGULATION AND PRACTICE

A grantable petition to make special under 37 C.F.R. § 1.102(d) and pursuant to the "Change to Practice for Petitions in Patent Applications to Make Special and for Accelerated Examination" published in the Federal Register on June 26, 2006 (71 Fed. Reg. 36323), must satisfy the following conditions:

I. Conditions Regarding the Application:

1. the application must be a non-reissue utility or design application filed under 37 CFR 1.111(a);
2. the application, the petition and the required fees must be filed electronically using the USPTO's electronic filing system (EFS), or EFS-web; if not filed electronically, a statement asserting that EFS and EFS-web were not available during the normal business hours.
3. at the time of filing, the application must be complete under 37 CFR 1.51 and in condition for examination;
4. the application must contain three or fewer independent claims and twenty or fewer total claims and the claims must be directed to a single invention.

II. Conditions Regarding the Petition:

The petition must:
1. be filed with the application;

2. include a statement that applicant agrees not to separately argue the patentability of any independent claim during any appeal in the application;

3. include a statement that applicant agrees to make an election without traverse in a telephone interview;

4. include a statement that applicant agrees to conduct such an interview when requested by the examiner; and

5. include a statement, made based on a good faith belief, that a preexamination search in compliance with the following requirements, was conducted, including an identification of the field of search by United States class and subclass, where applicable, and for database searches, the search logic or chemical structure or sequence used as a query, the name of the file(s) searched and the database service, and the date of the search.

The preexamination search must:

5.1 involve U.S. patents and patent application publications, foreign patent documents, and non-patent literature, unless the applicant can justify with reasonable certainty that no references more pertinent than those already identified are likely to be found in the eliminated sources and includes such a justification with this statement;

5.2. be directed to the claimed invention and encompass all of the features of the claims, giving the claims the broadest reasonable expectation; and

5.3. encompass the disclosed features that may be claimed.

6. must provide in support of the petition an accelerated examination support document. An accelerated examination support document must include:

6.1. an information disclosure statement (IDS) in compliance with 37 CFR 1.98 citing each reference deemed most closely related to the subject matter of each of the claims;

6.2. an identification of all the limitations in the claims that are disclosed by the reference specifying where the limitation is disclosed in the cited reference;

6.3. a detailed explanation of how each of the claims is patentable over the references cited with particularity required by 37 CFR 1.111(b) and (c);

6.4. a concise statement of the utility of the invention as defined in each of the independent claims (unless the application is a design application);

6.5. a showing of where each limitation of the claims finds support under 35 USC 112, first paragraph, in the written description of the specification. If applicable, the showing must also identify: (1) each means- (or step) plus-function claim element that invokes consideration under 35 USC 112, sixth paragraph; and (2) the structure, material, or acts in the specification that corresponds to each means- (or step) plus-function claim element that invokes consideration under 35 USC 112, sixth paragraph; if the application claims the benefit of one or more applications under title 35, United States Code, the showing must also include where each limitation of the claims finds support under 35 USC 112, first paragraph, in each such application in which such supports exists; and

6.6. an identification of any cited references that may be disqualified under 35 USC 103(c).

REVIEW OF FACTS

The conditions set forth in I. 1-4 and II. 1-4 are considered to have been met. However, the petition fails to comply with the all the conditions set forth in II. 5 and II. 6.5 above. Therefore, the petition fails to meet the required conditions to be accorded special status under the accelerated examination procedure.

Regarding the conditions of II. 5, as stated in the Federal Register of June 26, 2006 (71 Fed. Reg. 36323), "applicant must provide a statement that a preexamination search was conducted, including an identification of the field of search by United States class and subclass . . . and for database searches . . ." As stated in the Guidelines for Applicants Under the New Accelerated Examination Procedure (hereinafter the Guidelines), "(a) search submitted in support of a petition for accelerated examination will be considered sufficient . . . if the search includes: 1. A classified search of the US patents and published patent applications in the Class and subclass where the claimed invention is most likely to be classified in the current United States Patent Classification system (USPC)." The Guidelines then goes on to add that a sufficient search also includes a text search.

To summarize the Guidelines, a sufficient search includes a classified search and a text search. The Federal Register of June 26, 2006, specifically states that preexamination search must include an identification of the field of search by United States class and subclass (i.e., a classified search) and then indicates the requirements of a text/database search. In other words, a sufficient preexamination search in most cases must include both a classified search and a text search.

The statement of preexamination search in the present application indicates that the Classes/Subclasses Searched were 439/all subclasses. While it is possible that applicant performed a classified search of all the subclasses of class 439 (i.e., reviewing every patent in all the subclasses of an entire class), it is more likely that such a statement indicates that just a text search was performed which included all the patents in all the subclasses of the class. If applicant did perform a classified search of all the subclasses of class 439, applicant should so state. However, if not, a sufficient search for the present application would include a few of the most pertinent subclasses within 439/65-75.

Regarding the conditions of II. 6.5, a showing of where ***each*** claim limitation finds support under ***35 USC 112, first paragraph***, in the written description of the specification is required. The statement that support for the entire claim "is found at least in FIGS. 1-6 and in paragraphs [0013]-[0020]" is not specific enough. It must be indicated exactly where in the written description of the specification the support for ***each*** individual claim limitation can be found in the specification. This showing basically requires a copying of the claim, listing reference numbers for each claimed element and an indication where in the written description of the specification the claimed limitation is discussed.

DECISION

For the above-stated reasons, the petition is **dismissed**. The application will therefore be taken up by the examiner for action in its regular turn.

Petitioner is given a single opportunity to perfect the petition. Any request for reconsideration of this decision must be submitted within 1 (one) month or 30 (thirty) days, whichever is longer, from the date of this decision in order to be considered timely. Any request for reconsideration must address the deficiencies indicated above.

Petitioner is reminded that, upon granting of the special status of the application on request for reconsideration, the application will be processed expeditiously. However, due to the dismissal of the instant petition, examination may not be completed within twelve months of the filing date of the application.

Any inquiry regarding this decision should be directed to the undersigned at (571) 272-1638.

Edward Westin

Edward Westin, Quality Assurance Specialist
Technology Center 2800
Semiconductors, Electrical and Optical
Systems and Components

UNITED STATES PATENT AND TRADEMARK OFFICE

UNITED STATES DEPARTMENT OF COMMERCE
United States Patent and Trademark Office
Address: COMMISSIONER FOR PATENTS
P.O. Box 1450
Alexandria, Virginia 22313-1450
www.uspto.gov

APPLICATION NO.	FILING DATE	FIRST NAMED INVENTOR	ATTORNEY DOCKET NO.	CONFIRMATION NO.
12/058,792	03/31/2008	Vincent P. Mulligan	POU920070372US1	3892

76793 7590 08/28/2008
Cahn & Samuels, LLP
1100 17th St., NW, Ste. 401
Washington, DC 20036

EXAMINER

ART UNIT	PAPER NUMBER
2833	

MAIL DATE	DELIVERY MODE
08/28/2008	PAPER

Please find below and/or attached an Office communication concerning this application or proceeding.

The time period for reply, if any, is set in the attached communication.

UNITED STATES PATENT AND TRADEMARK OFFICE

Commissioner for Patents
United States Patent and Trademark Office
P.O. Box 1450
Alexandria, VA 22313-1450
www.uspto.gov

Cahn & Samuels, LLP
1100 17th St., NW, Ste. 401
Washington DC 20036

In re Application of:	:	
Vincent P. Mulligan et al.	:	
Serial No.: 12/058,792	:	DECISION ON RENEWED
Filed: March 31, 2008	:	PETITION TO MAKE SPECIAL
Docket Number: POU920070372US1	:	UNDER 37 C.F.R. § 1.102
Title: COIL CONTACT AND METHOD OF	:	& M.P.E.P. § 708.2
USING THE SAME AS INTERCONNECT	:	

This is a decision on the renewed petition filed on June 26, 2008 to make the above-identified application special for accelerated examination procedure under 37 C.F.R. §1.102(d).

In a telephone conversation with the petitioner, Warren Zitlau, on August 20, 2008, it was agreed that (1) a classified search means that all documents within the class/subclass were reviewed; (2) a text search means a computerized key word search; and (3) a database search as used in the Federal Register on June 26, 2006 (71 Fed. Reg. 36323) is referring to a text search. The petitioner confirmed that a classified search was performed of class 439/subclasses 65, 66 and 75.

The renewed petition to make the application special is GRANTED.

The application is eligible for accelerated examination and the petition complies with the conditions for granting the application special status pursuant to the "Change to Practice for Petitions in Patent Applications to Make Special and for Accelerated Examination" published June 26, 2006, in the Federal Register (71 Fed. Reg. 36323).

The prosecution of the instant application will be conducted expeditiously according to the following guidelines.

1. The application will be docketed to an examiner and taken up for action within two weeks of the date of this decision.

2. Restriction Practice:
   If the examiner determines that the claims are not directed to a single invention, a telephone request to elect one single invention will be made pursuant to MPEP 812.01. As a prerequisite to the grant of this petition, the applicant has agreed to make an oral election, by telephone, without traverse. If the applicant refuses to make an election without traverse, or the examiner cannot reach the applicant after a reasonable effort, the

examiner will treat the first claimed invention (invention defined by claim 1) as having being constructively elected without traverse for examination.

3. Office action:
If it is determined that, after appropriate consultation, there is a potential rejection or any other issue to be addressed, the examiner will telephone the applicant and arrange an interview to discuss and resolve the issue. An Office action, other than a Notice of Allowance and Fee(s) Due (Notice of Allowance), will not be issued unless either: 1) an interview was conducted but did not result in agreed to action that places the application in condition for allowance, or, 2) a determination is made that an interview would be unlikely to result in the application being placed in condition for allowance, and 3) an internal conference has been held to review any rejection of any claim.

4. Time for Reply:
An Office action other than a Notice of Allowance or a final Office action will set a shortened statutory period of one month or thirty days, whichever is longer, for reply with no extension of time available under 37 C.F.R. §1.136(a). Failure to timely file a reply within this non-extendible period for reply will result in the abandonment of the application.

5. Reply by Applicant:
A timely reply to an Office action other than the Notice of Allowance must be submitted electronically via EFS or EFS-web and limited to addressing the rejections, objections and requirement made. Any amendment that attempts to: 1) add claims which would result in more than three pending independent claims or more than twenty pending total claims; 2) present claims not encompassed by the pre-examination search or an updated accelerated examination support document; or 3) present claims that are directed a non-elected invention or an invention other than that previously claimed and examined in the application, will be treated as not fully responsive and will not be entered.

   For any amendment to the claims (including any new claim) that is not encompassed by the accelerated examination support document, applicant must provide an updated accelerated examination support document that encompasses the amended or new claims at the time of filing of the amendment.

   To proceed expeditiously with the examination, it is recommended that a reply with amendments made to any claim or with any new claim being added be accompanied by an updated accelerated examination support document or a statement explaining how the amended or new claim is supported by the original accelerated examination support document.

6. Information Disclosure Statement (IDS):
Any IDS filed during prosecution must be submitted electronically via EFS or EFS-web, accompanied by an updated accelerated examination support document, and be in compliance with 37 C.F.R. §1.97 and §1.98.

7. Post-Allowance Processing:
   To expedite processing of the allowed application into a patent, the applicant must: 1) pay the required fees within one month of the date of the Notice of Allowance, and 2) not file any post allowance papers not required by the Office. In no event may the issue fee be paid and accepted later than three months from the date of the Notice of Allowance.

8. After-Final and Appeal Procedures:
   To expedite prosecution, after receiving the final Office action, applicant must: 1) promptly file a notice of appeal, an appeal brief and appeal fees; and 2) not request a pre-appeal brief conference.

   Any amendment, affidavit or other evidence filed after final Office action must comply with applicable rules and the requirements outlined in numbered paragraphs 5 and 6 above.

   On appeal, the application will proceed according to normal appeal procedures. After appeal, the application will again be treated special.

9. Proceedings Outside the Normal Examination Process:
   If the application becomes involved in a proceeding that is outside the normal examination process (e.g., a secrecy order, national security review, interference proceeding, petitions under 37 C.F.R. §1.181, §1.182 or §1.183), the application will be treated special before and after such proceeding.

10. Final Disposition:
    The twelve-month goal of this accelerated examination procedure ends with a final disposition. The mailing of a final Office action, a Notice of Allowance, the filing of a Notice of Appeal, or the filing of a Request for Continued Examination (RCE) is the final disposition.

If, during prosecution, a paper is not filed electronically using EFS-web, a reply is filed but is not fully responsive, the application is involved in an appeal, or a proceeding outside normal examination process, the application will still be examined expeditiously, however, the final disposition may occur more than twelve months from the filing of the application.

Any inquiry regarding this decision should be directed to the undersigned at (571) 272-1638.

Edward Westin

Edward Westin, Quality Assurance Specialist
Technology Center 2800
Semiconductors, Electrical and Optical
Systems and Components

UNITED STATES PATENT AND TRADEMARK OFFICE

UNITED STATES DEPARTMENT OF COMMERCE
United States Patent and Trademark Office
Address: COMMISSIONER FOR PATENTS
P.O. Box 1450
Alexandria, Virginia 22313-1450
www.uspto.gov

APPLICATION NO.	FILING DATE	FIRST NAMED INVENTOR	ATTORNEY DOCKET NO.	CONFIRMATION NO.
12/058,808	03/31/2008	Anthony H. Phillips	GB920080079US1 (3028)	3914

78290 7590 08/25/2008
Oppenheimer Wolff & Donnelly LLP
Plaza VII, Suite 3300
45 South Seventh Street
Minneapolis, MN 55402-1609

EXAMINER
CALDWELL, ANDREW T

ART UNIT	PAPER NUMBER
2142	

MAIL DATE	DELIVERY MODE
08/25/2008	PAPER

Please find below and/or attached an Office communication concerning this application or proceeding.

The time period for reply, if any, is set in the attached communication.

UNITED STATES PATENT AND TRADEMARK OFFICE

Commissioner for Patents
United States Patent and Trademark Office
P.O. Box 1450
Alexandria, VA 22313-1450
www.uspto.gov

Oppenheimer Wolff & Donnelly LLP
Plaza VII, Suite 3300
45 South Seventh Street
Minneapolis MN 55402-1609

In re Application of: Anthony H. Phillips et al. Serial No.: 12/058808 Filed: March 31, 2008 Docket: GB920080079US1 (3028) Title: REDIRECTING FILE ACCESS THROUGH A HTTP WEB SERVER	DECISION ON PETITION TO MAKE SPECIAL FOR NEW APPLICATION UNDER 37 C.F.R. § 1.102 & M.P.E.P. § 708.02

This is a decision on the petition filed on March 31, 2008 to make the above-identified application special for accelerated examination procedure under 37 C.F.R. § 1.102(d) and the supplemental preexamination search support documents filed in support thereof on August 11, 2008.

The petition to make the application special is **GRANTED**.

The application is eligible for accelerated examination and the petition complies with the conditions for granting the application special status pursuant to the "Change to Practice for Petitions in Patent Applications to Make Special and for Accelerated Examination" published June 26, 2006, in the Federal Register. (71 Fed. Reg. 36323).

The prosecution of the instant application will be conducted expeditiously according to the following guidelines.

1. The application will be docketed to an examiner and taken up for action within two weeks of the date of this decision.

2. Restriction Practice:
   If the examiner determines that the claims are not directed to a single invention, a telephone request to elect one single invention will be made pursuant to MPEP 812.01. As a prerequisite to the grant of this petition, the applicant has agreed to make an oral election, by telephone, without traverse. If the applicant refuses to make an election without traverse, or the examiner cannot reach the applicant after a reasonable effort, the examiner will treat the first claimed invention (invention defined by claim 1) as having being constructively elected without traverse for examination.

3. Office action:
   If it is determined that, after appropriate consultation, there is a potential rejection or any other issue to be addressed, the examiner will telephone the applicant and arrange an interview to discuss and resolve the issue. An Office action, other than a Notice of Allowance and Fee(s) Due (Notice of Allowance), will not be issued unless either: 1) an interview was conducted but did not result in agreed to action that places the application in condition for allowance, or, 2) a determination is made that an interview would be unlikely to result in the application being placed in condition for allowance, and 3) an internal conference has been held to review any rejection of any claim.

4. Time for Reply:
   An Office action other than a Notice of Allowance or a final Office action will set a shortened statutory period of one month or thirty days, whichever is longer, for reply with no extension of time available under 37 CFR 1.136(a). Failure to timely file a reply within this non-extendible period for reply will result in the abandonment of the application.

5. Reply by Applicant:
   A timely reply to an Office action other than the Notice of Allowance must be submitted electronically via EFS or EFS-web and limited to addressing the rejections, objections and requirement made. Any amendment that attempts to: 1) add claims which would result in more than three pending independent claims or more than twenty pending total claims; 2) present claims not encompassed by the pre-examination search or an updated accelerated examination support document; or 3) present claims that are directed a non-elected invention or an invention other than that previously claimed and examined in the application, will be treated as not fully responsive and will not be entered.

   For any amendment to the claims (including any new claim) that is not encompassed by the accelerated examination support document, applicant must provide an updated accelerated examination support document that encompasses the amended or new claims at the time of filing of the amendment.

   To proceed expeditiously with the examination, it is recommended that a reply with amendments made to any claim or with any new claim being added be accompanied by an updated accelerated examination support document or a statement explaining how the amended or new claim is supported by the original accelerated examination support document.

6. Information Disclosure Statement (IDS):
   Any IDS filed during prosecution must be submitted electronically via EFS or EFS-web, accompanied by an updated accelerated examination support document, and be in compliance with 37 CFR 1.97 and 1.98.

7. Post-Allowance Processing:
   To expedite processing of the allowed application into a patent, the applicant must: 1) pay the required fees within one month of the date of the Notice of Allowance, and 2) not file

any post allowance papers not required by the Office. In no event may the issue fee be paid and accepted later than three months from the date of the Notice of Allowance.

8. After-Final and Appeal Procedures:
   To expedite prosecution, after receiving the final Office action, applicant must: 1) promptly file a notice of appeal, an appeal brief and appeal fees; and 2) not request a pre-appeal brief conference.

   Any amendment, affidavit or other evidence filed after final Office action must comply with applicable rules and the requirements outlined in numbered paragraphs 5 and 6 above.

   On appeal, the application will proceed according to normal appeal procedures. After appeal, the application will again be treated special.

9. Proceedings Outside the Normal Examination Process:
   If the application becomes involved in a proceeding that is outside the normal examination process (e.g., a secrecy order, national security review, interference proceeding, petitions under 37 CFR 1.181, 182 or 183), the application will be treated special before and after such proceeding.

10. Final Disposition:
    The twelve-month goal of this accelerated examination procedure ends with a final disposition. The mailing of a final Office action, a Notice of Allowance, the filing of a Notice of Appeal, or the filing of a Request for Continued Examination (RCE) is the final disposition.

If, during prosecution, a paper is not filed electronically using EFS-web, a reply is filed but is not fully responsive, the application is involved in an appeal, or a proceeding outside normal examination process, the application will still be examined expeditiously, however, the final disposition may occur more than twelve months from the filing of the application. In addition, Applicant is reminded that due to the dismissal of the previous petition submission, examination may not be completed within twelve months of the filing date of the application.

Any inquiry regarding this decision should be directed to Kakali Chaki at (571) 272-3719.

/Kakali Chaki/

Kakali Chaki, Quality Assurance Specialist
Technology Center 2100

UNITED STATES PATENT AND TRADEMARK OFFICE

UNITED STATES DEPARTMENT OF COMMERCE
United States Patent and Trademark Office
Address: COMMISSIONER FOR PATENTS
P.O. Box 1450
Alexandria, Virginia 22313-1450
www.uspto.gov

APPLICATION NO.	FILING DATE	FIRST NAMED INVENTOR	ATTORNEY DOCKET NO.	CONFIRMATION NO.
12/058,853	03/31/2008	Hiroshi SUZUKI	JP920070191US1	3972

38245 7590 07/16/2008
JEROME D. JACKSON (JACKSON PATENT LAW OFFICE)
211 N. UNION STREET, SUITE 100
ALEXANDRIA, VA 22314

EXAMINER
CHANKONG, DOHM

ART UNIT	PAPER NUMBER
2152	

MAIL DATE	DELIVERY MODE
07/16/2008	PAPER

Please find below and/or attached an Office communication concerning this application or proceeding.

The time period for reply, if any, is set in the attached communication.

UNITED STATES PATENT AND TRADEMARK OFFICE

Commissioner for Patents
United States Patent and Trademark Office
P.O. Box 1450
Alexandria, VA 22313-1450
www.uspto.gov

JEROME D. JACKSON (JACKSON PATENT LAW OFFICE)
211 N. UNION STREET, SUITE 100
ALEXANDRIA VA 22314

In re Application of: Hiroshi Suzuki et al. Serial No.: 12/058,853 Filed: March 31, 2008 Docket: JP920070191US1 Title: SYSTEMS AND METHODS OF AUTOMATIC RETRANSMISSION OF ELECTRONIC MAIL	DECISION ON PETITION TO MAKE SPECIAL FOR NEW APPLICATION UNDER 37 C.F.R. § 1.102 & M.P.E.P. § 708.02

This is a decision on the petition filed on March 31, 2008 to make the above- identified application special for accelerated examination procedure under 37 C.F.R. § 1.102(d).

The petition to make the application special is GRANTED.

The application is eligible for accelerated examination and the petition complies with the conditions for granting the application special status pursuant to the "Change to Practice for Petitions in Patent Applications to Make Special and for Accelerated Examination" published June 26, 2006, in the Federal Register. (71 Fed. Reg. 36323).

The prosecution of the instant application will be conducted expeditiously according to the following guidelines.

1. The application will be docketed to an examiner and taken up for action within two weeks of the date of this decision.

2. Restriction Practice:
   If the examiner determines that the claims are not directed to a single invention, a telephone request to elect one single invention will be made pursuant to MPEP 812.01. As a prerequisite to the grant of this petition, the applicant has agreed to make an oral election, by telephone, without traverse. If the applicant refuses to make an election without traverse, or the examiner cannot reach the applicant after a reasonable effort, the examiner will treat the first claimed invention (invention defined by claim 1) as having being constructively elected without traverse for examination.

3. Office action:
   If it is determined that, after appropriate consultation, there is a potential rejection or any other issue to be addressed, the examiner will telephone the applicant and arrange an interview to discuss and resolve the issue. An Office action, other than a Notice of Allowance and Fee(s) Due (Notice of Allowance), will not be issued unless either: 1) an interview was conducted but did not result in agreed to action that places the application in condition for allowance, or, 2) a determination is made that an interview would be unlikely to result in the application being placed in condition for allowance, and 3) an internal conference has been held to review any rejection of any claim.

4. Time for Reply:
   An Office action other than a Notice of Allowance or a final Office action will set a shortened statutory period of one month or thirty days, whichever is longer, for reply with no extension of time available under 37 CFR 1.136(a). Failure to timely file a reply within this non-extendible period for reply will result in the abandonment of the application.

5. Reply by Applicant:
   A timely reply to an Office action other than the Notice of Allowance must be submitted electronically via EFS or EFS-web and limited to addressing the rejections, objections and requirement made. Any amendment that attempts to: 1) add claims which would result in more than three pending independent claims or more than twenty pending total claims; 2) present claims not encompassed by the pre-examination search or an updated accelerated examination support document; or 3) present claims that are directed a non-elected invention or an invention other than that previously claimed and examined in the application, will be treated as not fully responsive and will not be entered.

   For any amendment to the claims (including any new claim) that is not encompassed by the accelerated examination support document, applicant must provide an updated accelerated examination support document that encompasses the amended or new claims at the time of filing of the amendment.

   To proceed expeditiously with the examination, it is recommended that a reply with amendments made to any claim or with any new claim being added be accompanied by an updated accelerated examination support document or a statement explaining how the amended or new claim is supported by the original accelerated examination support document.

6. Information Disclosure Statement (IDS):
   Any IDS filed during prosecution must be submitted electronically via EFS or EFS-web, accompanied by an updated accelerated examination support document, and be in compliance with 37 CFR 1.97 and 1.98.

7. Post-Allowance Processing:
   To expedite processing of the allowed application into a patent, the applicant must: 1) pay the required fees within one month of the date of the Notice of Allowance, and 2) not

file any post allowance papers not required by the Office. In no event may the issue fee be paid and accepted later than three months from the date of the Notice of Allowance.

8. After-Final and Appeal Procedures:
   To expedite prosecution, after receiving the final Office action, applicant must: 1) promptly file a notice of appeal, an appeal brief and appeal fees; and 2) not request a pre-appeal brief conference.

   Any amendment, affidavit or other evidence filed after final Office action must comply with applicable rules and the requirements outlined in numbered paragraphs 5 and 6 above.

   On appeal, the application will proceed according to normal appeal procedures. After appeal, the application will again be treated special.

9. Proceedings Outside the Normal Examination Process:
   If the application becomes involved in a proceeding that is outside the normal examination process (e.g., a secrecy order, national security review, interference proceeding, petitions under 37 CFR 1.181, 182 or 183), the application will be treated special before and after such proceeding.

10. Final Disposition:
    The twelve month goal of this accelerated examination procedure ends with a final disposition. The mailing of a final Office action, a Notice of Allowance, the filing of a Notice of Appeal, or the filing of a Request for Continued Examination (RCE) is the final disposition.

If, during prosecution, a paper is not filed electronically using EFS-web, a reply is filed but is not fully responsive, the application is involved in an appeal, or a proceeding outside normal examination process, the application will still be examined expeditiously, however, the final disposition may occur more than twelve months from the filing of the application.

Any inquiry regarding this decision should be directed the undersigned whose telephone number is (571) 272-4147.

If attempts to reach the undersigned by telephone are unsuccessful, Tod Swann, Quality Assurance Specialist, can be reached at (571) 272-3612.

Kim Huynh
Quality Assurance Specialist
Technology Center 2100
Computer Architecture, Software and Information Security

UNITED STATES PATENT AND TRADEMARK OFFICE

Commissioner for Patents
United States Patent and Trademark Office
P.O. Box 1450
Alexandria, VA 22313-1450
www.uspto.gov

SCHOPPE, ZIMMERMANN , STOCKELER & ZINKLER
C/O KEATING & BENNETT, LLP
1800 ALEXANDER BELL DRIVE
SUITE 200
Reston, VA 20191

MAILED

AUG 17 2009

OFFICE OF PETITIONS

In re Application of	:	
Harald Schenk, et al.	:	
Application No. 12/058,855	:	DECISION GRANTING PETITION
Filed: March 31, 2008	:	UNDER 37 CFR 1.313(c)(2)
Attorney Docket No. 50501.72	:	

This is a decision on the petition under 37 CFR 1.313(c)(2), filed August 13, 2009, to withdraw the above-identified application from issue after payment of the issue fee.

The petition is **GRANTED**.

The above-identified application is withdrawn from issue for consideration of a submission under 37 CFR 1.114 (request for continued examination). *See* 37 CFR 1.313(c)(2).

Petitioner is advised that the issue fee paid on July 16, 2009 cannot be refunded. If, however, this application is again allowed, petitioner may request that it be applied towards the issue fee required by the new Notice of Allowance.[1]

Telephone inquiries regarding this decision should be directed to undersigned at (571) 272-1642. All other inquiries regarding the examination or status of this application should be directed to the Technology Center.

This application is being referred to Technology Center AU 2873 for processing of the request for continued examination under 37 CFR 1.114 and for consideration of the concurrently filed information disclosure statement.

/AMW/
April M. Wise
Petitions Examiner

---

[1] *The request to apply the issue fee to the new Notice may be satisfied by completing and returning the new Part B – Fee(s) Transmittal Form (along with any balance due at the time of submission). Petitioner is advised that the Issue Fee Transmittal Form* ***must*** *be completed and timely submitted to avoid abandonment of the application.*

UNITED STATES PATENT AND TRADEMARK OFFICE

UNITED STATES DEPARTMENT OF COMMERCE
United States Patent and Trademark Office
Address: COMMISSIONER FOR PATENTS
P.O. Box 1450
Alexandria, Virginia 22313-1450
www.uspto.gov

APPLICATION NO.	FILING DATE	FIRST NAMED INVENTOR	ATTORNEY DOCKET NO.	CONFIRMATION NO.
12/058,866	03/31/2008	Frank Mersch	0550221.00014	3995

EXAMINER

7590 11/18/2008
Locke Lord Bissell & Liddell LLP
Attn: Michael Ritchie, Docketing
2200 Ross Avenue
Suite # 2200
DALLAS, TX 75201-6776

ART UNIT	PAPER NUMBER
2877	

MAIL DATE	DELIVERY MODE
11/18/2008	PAPER

DECISION GRANTING PETITION UNDER 37 CFR 1.138(d)

The declaration of express abandonment is recognized

This is in response to the petition under 37 CFR 1.138(d), requesting for a refund of any previously paid search fee and excess claims fee in the above-identified application.

The petition is granted.

The express abandonment is recognized. Any previously paid search fee and excess claims fee are hereby refunded.

Telephone inquiries should be directed to the Office of Data Management at (571) 272-4200.

Tom Farmer

Patent Publication Branch
Office of Data Management

Adjustment date: 11/18/2008 NFARMER
03/31/2008 INTEFSW 00007156 121781 12058866
02 FC:1111 510.00 CR
04 FC:1201 210.00 CR

FORM PET651G (Rev. 08/07)

UNITED STATES PATENT AND TRADEMARK OFFICE

UNITED STATES DEPARTMENT OF COMMERCE
United States Patent and Trademark Office
Address: COMMISSIONER FOR PATENTS
P.O. Box 1450
Alexandria, Virginia 22313-1450
www.uspto.gov

APPLICATION NO.	FILING DATE	FIRST NAMED INVENTOR	ATTORNEY DOCKET NO.	CONFIRMATION NO.
12/058,868	03/31/2008	William H. Eby	1421-333	3999

32905 7590 01/05/2010
JONDLE & ASSOCIATES P.C.
858 HAPPY CANYON ROAD SUITE 230
CASTLE ROCK, CO 80108

EXAMINER
COLLINS, CYNTHIA E

ART UNIT	PAPER NUMBER
1638	

MAIL DATE	DELIVERY MODE
01/05/2010	PAPER

Please find below and/or attached an Office communication concerning this application or proceeding.

The time period for reply, if any, is set in the attached communication.

UNITED STATES PATENT AND TRADEMARK OFFICE

Commissioner for Patents
United States Patent and Trademark Office
P.O. Box 1450
Alexandria, VA 22313-1450
www.uspto.gov

JONDLE & ASSOCIATES P.C.
858 HAPPY CANYON ROAD SUITE 230
CASTLE ROCK CO 80108

JAN 0 6 2010

In re Application of:
William H. Eby
Serial No.: 12/058,868
Filed: March 31, 2008
Attorney Docket No.: **1421-333**

: PETITION DECISION

This is in response to the petition under 37 CFR § 1.59(b), filed September 24, 2009, to expunge information from the above identified application. This application has not been allowed.

Petitioner requests that the Reply to Request for Information under 37 CFR 1.105, and attachment thereto, submitted to the Patent Office on September 24, 2009, be expunged from the record. Petitioner states either: (A) that the information contains trade secret material, proprietary material and/or material that is subject to a protective order which has not been made public; or (B) that the information submitted was unintentionally submitted and the failure to obtain its return would cause irreparable harm to the party who submitted the information or to the party in interest on whose behalf the information was submitted, and the information has not otherwise been made public. The petition fee set forth in 37 CFR § 1.17(g) has been paid.

This is an examined application which is currently under non-final rejection. As such the information provided has been reviewed, in part, but proceedings in the application have not been terminated. As stated in M.P.E.P. 724, upon allowance or other action closing prosecution in an application, petition may be made for return of Proprietary information. The information cannot be expunged at this time.

The petition is **DISMISSED**. Petitioner may resubmit the petition subsequent to a Notice of Allowability or *ex parte Quayle* action being mailed in the application. No additional petition fee will be required at that time.

Should there be any questions about this decision please contact Marianne C. Seidel by letter addressed to Director, TC 1600, at the address listed above, or by telephone at 571-272-0584 or by facsimile sent to the general Office facsimile number, 703-872-9306.

Marianne C. Seidel
Quality Assurance Specialist
Technology Center 1600

UNITED STATES PATENT AND TRADEMARK OFFICE

UNITED STATES DEPARTMENT OF COMMERCE
United States Patent and Trademark Office
Address: COMMISSIONER FOR PATENTS
P.O. Box 1450
Alexandria, Virginia 22313-1450
www.uspto.gov

WARNER NORCROSS & JUDD LLP
900 FIFTH THIRD CENTER
111 LYON STREET, N.W.
GRAND RAPIDS, MI 49503-2487

Mail Date: 04/21/2010

Applicant	: David Morrow	: DECISION ON REQUEST FOR
Patent Number	: 7621832	: RECALCULATION of PATENT
Issue Date	: 11/24/2009	: TERM ADJUSTMENT IN VIEW
Appliction No	: 12/058,909	: OF WYETH AND NOTICE OF INTENT TO
Filed	: 03/31/2008	: ISSUE CERTIFICATE OF CORRECTION
		:

The Request for Recalculation is **GRANTED** to the extent indicated.

The patent term adjustment has been determined to be **0** days. The USPTO will *sua sponte* issue a certificate of correction reflecting the amount of PTA days determined by the recalculation.

Prior to the issuance of the certificate of correction, the USPTO will afford patentee an opportunity to be heard and request reconsideration. Accordingly, patentee has **one month or thirty (30) days**, whichever is longer, to file a request for reconsideration of this patent term adjustment calculation. See 35 U.S.C. 154(b)(3)(B)(ii) and 37 CFR 1.322(a)(4). No extensions of time will be granted under 37 CFR 1.136.

Patentee should use document code PET.OP if electronically filing a request for reconsideration of this patent term adjustment calculation. The patentee must also include the information required by 37 CFR 1.705(b)(2) and the fee required by 37 CFR 1.18(e). If patentee does not file a timely request for reconsideration of this patent term adjustment calculation including the information required by 37 CFR 1.705(b)(2) and the fee required by 37 CFR 1.18(e), the USPTO will issue a certificate of correction reflecting the PTA determination noted above.

Patentee should be aware that in order to preserve the right to review in the United States District Court for the District of Columbia of the USPTO patent term adjustment determination, patentee must ensure that he or she also take the steps required under 35 U.S.C. 154(b)(4)(A) in a timely manner. Nothing in the request for recalculation should be construed as providing an alternative time frame for commencing a civil action under 35 U.S.C. 154(b)(4)(A).

Any questions concerning this decision should be directed to the Office of Patent Legal Administration at 571-272-7702.

UNITED STATES PATENT AND TRADEMARK OFFICE

UNITED STATES DEPARTMENT OF COMMERCE
United States Patent and Trademark Office
Address: COMMISSIONER FOR PATENTS
P.O. Box 1450
Alexandria, Virginia 22313-1450
www.uspto.gov

APPLICATION NO.	FILING DATE	FIRST NAMED INVENTOR	ATTORNEY DOCKET NO.	CONFIRMATION NO.
12/059,002	03/31/2008	Miguel Tovar	ADP-11302/36	4227

84737 7590 02/16/2010
Adaptive Materials Inc.
5500 S. State Rd.
Ann Arbor, MI 48108

EXAMINER
CANTELMO, GREGG

ART UNIT	PAPER NUMBER
1795	

MAIL DATE	DELIVERY MODE
02/16/2010	PAPER

Please find below and/or attached an Office communication concerning this application or proceeding.

The time period for reply, if any, is set in the attached communication.

UNITED STATES PATENT AND TRADEMARK OFFICE

Commissioner for Patents
United States Patent and Trademark Office
P.O. Box 1450
Alexandria, VA 22313-1450
www.uspto.gov

Adaptive Materials Inc.
5500 S. State Rd.
Ann Arbor MI 48108

FEB 16 2010

In re Application of	:	
Tovar et al.	:	DECISION ON PETITION
Application No. 12/059,002	:	TO MAKE SPECIAL UNDER
Filed: 3/31/2008	:	THE GREEN TECHNOLOGY
Attorney Docket No. **ADP-11302/36**	:	PILOT PROGRAM

This is a decision on the petition under 37 CFR 1.102, filed 1/6/2010, to make the above-identified application special under the pilot program for applications pertaining to Green Technologies as set forth 74 Federal Register Notice 64666 (December 8, 2009).

The petition is **GRANTED**.

A grantable petition to make an application special under 37 CFR 1.102 and the pilot program as set forth in 74 FR 64666 must be directed to a nonprovisional application filed under 35 USC 111(a) or be a national stage entry under 35 USC 371, exclusive of any reissue applications and be filed prior to the date of the notice, December 8, 2009.

In order to qualify for special status, the following requirements must be met. 1) The application must be classified in one of the eligible US classifications listed in section VI of the notice. 2) The application must have no more than 3 independent claims and no more than 20 total claims. 3) The application must not contain any multiple dependent claims. 4) The petition must state the basis for seeking special status, i.e., the claimed invention either: A) materially enhances the quality of the environment or B) materially contributes to: i) the discovery or development of renewable energy resources, ii) the more efficient utilization and conservation of energy resources, or iii) greenhouse gas emission reduction. 5) If the disclosure is not clear on its face that the claimed invention materially contributes under category (A) or (B), the petition must be accompanied by a statement by the applicant, assignee, or an attorney/agent registered to practice before the Office explaining how the materiality standard is met. 6) A statement that applicant will agree to make an election without traverse in a telephonic interview if a restriction requirement is made by the examiner. 7) The petition to make special must be filed electronically. 8) The petition must be filed at least one day prior to the date that a first Office Action appears in the Patent Application Information Retrieval (PAIR) system. 9) The petition must be accompanied by a request for early publication in compliance with 37 CFR 1.219 and include the publication fee as set forth in 37 CFR 1.18(d).

The requirement for a fee for consideration of the petition to make special for applications pertaining to Green Technologies has been waived.

The instant petition complies with items 1 – 9 above. Accordingly, the above-identified application has been accorded "special" status.

Telephone inquires concerning this decision should be directed to Tom Dunn at 571-272-1171.

The application is being forwarded to the Technology Center Art Unit 1795 for action on the merits commensurate with this decision.

/Tom Dunn/

Tom Dunn
Quality Assurance Specialist
Technology Center 1700

UNITED STATES PATENT AND TRADEMARK OFFICE

Commissioner for Patents
United States Patent and Trademark Office
P.O. Box 1450
Alexandria, VA 22313-1450
www.uspto.gov

HONEYWELL INTERNATIONAL INC.
101 COLUMBIA ROAD
P O BOX 2245
MORRISTOWN NJ 07962-2245

COPY MAILED

JUL 15 2008

OFFICE OF PETITIONS

In re Application of :
Turner :
Application No. 12/059,020 :
Deposited: March 31, 2008 :
Attorney Docket No. PHYSICAL VAPOR :
DEPOSITION TARGETS COMPRISING TI
AND ZR AND METHODS OF USE

ON PETITION

This is a decision on the petition under 37 CFR 1.57(a), filed April 30, 2008, requesting that the above-identified application be accorded a filing date of March 31, 2008, adding the specification from a parent application. The parent application was not specified in the petition. However a review of the application transmittal letter and the amendment to the specification reveals that this application is a divisional application of Application No. 10/276,281. Therefore, the petition will be treated as a request to add the specification from Application No. 10/276,281 to the present application and accord a filing date of March 31, 2008 to the present application.

The petition under 37 CFR 1.57(a) is **DISMISSED**.

Any reconsideration petition should be filed within two (2) months of the mail date of this decision on petition.

The application was deposited on March 31, 2008. A Notice of Incomplete Nonprovisional Application was mailed on April 18, 2008. A filing date was not accorded to the application deposited on March 31, 2008 because the application was missing a specification.

Petitioner filed the present petition in response on April 30, 2008. Petitioner states that the specification was inadvertently omitted from the application deposited on March 31, 2008, but because the application contains a claim for benefit of priority under 37 CFR 1.78 to Application No. 10/276,281, that petitioner is permitted to amend the above-identified application to include the specification and thereby, obtain a March 31, 2008 filing date for the application.

The applicable rule provides (in pertinent part):

§ 1.57 Incorporation by reference.

(a) Subject to the conditions and requirements of this paragraph, if all or a portion of the specification or drawing(s) is inadvertently omitted from an application, but the application contains a claim under § 1.55 for priority of a prior-filed foreign application, or a claim under § 1.78 for the benefit of a prior-filed provisional, nonprovisional, or international application, that was present on the filing date of the application, and the inadvertently omitted portion of the specification or drawing(s) is completely contained in the prior-filed application, the claim under § 1.55 or § 1.78 shall also be considered an incorporation by reference of the prior-filed application as to the inadvertently omitted portion of the specification or drawing(s).

(1) The application must be amended to include the inadvertently omitted portion of the specification or drawing(s) within any time period set by the Office, but in no case later than the close of prosecution as defined by § 1.114(b), or abandonment of the application, whichever occurs earlier. The applicant is also required to:

(i) Supply a copy of the prior-filed application, except where the prior-filed application is an application filed under 35 U.S.C. 111;

(ii) Supply an English language translation of any prior-filed application that is in a language other than English; and

(iii) Identify where the inadvertently omitted portion of the specification or drawings can be found in the prior-filed application.

...

(3) If an application is not otherwise entitled to a filing date under § 1.53(b), the amendment must be by way of a petition pursuant to this paragraph accompanied by the fee set forth in § 1.17(f).

The petition is dismissed because petitioner did **not** file a formal amendment to add the specification. Both an amendment adding the material and a petition are required under 37 CFR 1.57(a). MPEP 201.17 Incorporation by Reference under 37 CFR 1.57(a).

Petitioner argues that the Notice was mailed in error and a refund is due because a specification need not be copied and included with divisional application papers in order to obtain a filing date. Petitioner is informed that per MPEP 601.01(a), "...37 CFR 1.53(b) may be used to file any original, reissue, or substitute nonprovisional application and any continuing application, i.e., continuation, divisional, or continuation-in-part. Under 37 CFR 1.53(b), a filing date

is assigned to a nonprovisional application as of the date a specification containing a description and claim and any necessary drawings are filed in the U.S. Patent and Trademark Office (USPTO). Failure to meet any of the requirements in 37 CFR 1.53(b) will result in the application being denied a filing date. ..." The April 18, 2008 Notice was not mailed in error.

The petition fee is required because the application deposited on March 31, 2008 is not entitled to a filing date without a successful Rule 57(a)(3) petition.

Further correspondence with respect to this matter should be addressed as follows:

By mail:
Mail Stop PETITION
Commissioner for Patents
Post Office Box 1450
Alexandria, VA 22313-1450

By hand:
U.S. Patent and Trademark Office
Customer Service Window, Mail Stop Petition
Randolph Building
401 Dulany Street
Alexandria, VA 22314

By FAX:
(571) 273-8300 - ATTN: Office of Petitions

Telephone inquiries concerning this matter may be directed to Petitions Attorney Shirene Willis Brantley at (571) 272-3230.

Anthony Knight
Supervisor
Office of Petitions

UNITED STATES PATENT AND TRADEMARK OFFICE

Commissioner for Patents
United States Patent and Trademark Office
P.O. Box 1450
Alexandria, VA 22313-1450
www.uspto.gov

HONEYWELL INTERNATIONAL INC.
101 COLUMBIA ROAD
P O BOX 2245
MORRISTOWN NJ 07962-2245

COPY MAILED

OCT 1 4 2008

OFFICE OF PETITIONS

In re Application of :
Turner :
Application No. 12/059,020 :
Deposited: March 31, 2008 :
Attorney Docket No. PHYSICAL VAPOR :
DEPOSITION TARGETS COMPRISING TI
AND ZR AND METHODS OF USE

ON PETITION

This is a decision on the reconsideration petition under 37 CFR 1.57(a), filed August 7, 2008, requesting that the above-identified application be accorded a filing date of March 31, 2008, adding the specification from Application No. 10/276,281.

The petition under 37 CFR 1.57(a)(3) is **GRANTED**.

The application was deposited on March 31, 2008. A Notice of Incomplete Nonprovisional Application was mailed on April 18, 2008. A filing date was not accorded to the application deposited on March 31, 2008 because the application was missing a specification.

Petitioner states that the specification was inadvertently omitted from the application deposited on March 31, 2008, but because the application contains a claim for benefit of priority under 37 CFR 1.78 to Application No. 10/276,281, that petitioner is permitted to amend the above-identified application to include the specification and thereby, obtain a March 31, 2008 filing date for the application.

The applicable rule provides (in pertinent part):

> **§ 1.57 Incorporation by reference.**
>
> (a) Subject to the conditions and requirements of this paragraph, if all or a portion of the specification or drawing(s) is inadvertently omitted from an application, but the application contains a claim under § 1.55 for priority of a prior-filed foreign application, or a claim under § 1.78 for the benefit of a prior-filed provisional,

nonprovisional, or international application, that was present on the filing date of the application, and the inadvertently omitted portion of the specification or drawing(s) is completely contained in the prior-filed application, the claim under § 1.55 or § 1.78 shall also be considered an incorporation by reference of the prior-filed application as to the inadvertently omitted portion of the specification or drawing(s).

(1) The application must be amended to include the inadvertently omitted portion of the specification or drawing(s) within any time period set by the Office, but in no case later than the close of prosecution as defined by § 1.114(b), or abandonment of the application, whichever occurs earlier. The applicant is also required to:

(i) Supply a copy of the prior-filed application, except where the prior-filed application is an application filed under 35 U.S.C. 111;

(ii) Supply an English language translation of any prior-filed application that is in a language other than English; and

(iii) Identify where the inadvertently omitted portion of the specification or drawings can be found in the prior-filed application.

...

(3) If an application is not otherwise entitled to a filing date under § 1.53(b), the amendment must be by way of a petition pursuant to this paragraph accompanied by the fee set forth in § 1.17(f).

It is noted that the application as filed included a preliminary amendment, with a claim under 1.78 for the benefit of prior-filed application No.10/276,281. Thus, pursuant to 1.57, the application as filed is considered to have incorporated by reference the prior filed application as to the inadvertently omitted portion of the specification.

The instant petition includes an amendment adding the inadvertently omitted specification.

In view of the incorporation by reference of the prior application, the specification supplied on August 7, 2008, would not constitute new matter if it were a part of the original disclosure of the prior application. Of course, the examiner is expected to compare the specification supplied on August 7, 2008, to the disclosure of prior application No. 10/276,281 in order to verify that it is an accurate copy of the prior specification and that it contains no new matter.

In view thereof, the petition is **GRANTED**.

Petitioner requests a refund of the petition fee because the application, as filed, contained an explicit incorporation by reference statement for Application No. 10/276,281, as well as a benefit claim for Application No. 10/276,281.

Petitioner's attention is directed to MPEP 201.06(c) IV. INCORPORATION BY REFERENCE A. Application NOT Entitled to Filing Date, which states, " Material needed to accord an application a filing date may not be incorporated by reference unless an appropriate petition under 37 CFR 1.57(a)(3) or under 37 CFR 1.182 is granted. Until such a petition has been granted, the application will not be entitled to a filing date." Therefore, no matter which avenue of relief petitioner selected, either a petition under 37 CFR 1.182 based on the explicit incorporation by reference of Application No. 10/276,281, or a petition under 37 CFR 1.57(a)(3) based on the benefit claim for Application No. 10/276,281, a petition accompanied by a $400.00 petition fee was required.

The application is being forwarded to the Office of Patent Application Processing (OPAP) for **according of a filing date of March 31, 2008**, as a divisional application under 37 CFR 1.53(b) of prior application No. 10/276,281, including the copy of specification from the prior application supplied on August 7, 2008. Applicant will receive appropriate notifications regarding the fees owed, if any, and other information in due course from OPAP.

Telephone inquiries concerning this matter may be directed to Petitions Attorney Shirene Willis Brantley at (571) 272-3230.

Anthony Knight
Supervisor
Office of Petitions

UNITED STATES PATENT AND TRADEMARK OFFICE

UNITED STATES DEPARTMENT OF COMMERCE
United States Patent and Trademark Office
Address: COMMISSIONER FOR PATENTS
P.O. Box 1450
Alexandria, Virginia 22313-1450
www.uspto.gov

APPLICATION NO.	FILING DATE	FIRST NAMED INVENTOR	ATTORNEY DOCKET NO.	CONFIRMATION NO.
12/059,023	03/31/2008	Anthony H. Phillips	GB920080093US1 (3017)	4265

78290 7590 10/20/2008
Oppenheimer Wolff & Donnelly LLP
Plaza VII, Suite 3300
45 South Seventh Street
Minneapolis, MN 55402-1609

EXAMINER
DHARIA, RUPAL

ART UNIT	PAPER NUMBER
2441	

MAIL DATE	DELIVERY MODE
10/20/2008	PAPER

Please find below and/or attached an Office communication concerning this application or proceeding.

The time period for reply, if any, is set in the attached communication.

UNITED STATES PATENT AND TRADEMARK OFFICE

Commissioner for Patents
United States Patent and Trademark Office
P.O. Box 1450
Alexandria, VA 22313-1450
www.uspto.gov

Oppenheimer Wolff & Donnelly LLP
Plaza VII, Suite 3300
45 South Seventh Street
Minneapolis MN 55402-1609

In re Application of: Anthony H. PHILLIPS Serial No.: 12/059,023 Filed: Mar 31, 2007 Docket: GB920080093US1 Title: MOUNTING EMAIL ADDRESSES IN A FILE SYSTEM	DECISION ON PETITION TO MAKE SPECIAL FOR NEW APPLICATION UNDER 37 C.F.R. § 1.102 & M.P.E.P. § 708.02

This is a decision on the petition filed on Mar 31, 2008 to make the above-identified application special for accelerated examination procedure under 37 C.F.R. § 1.102(d).

The petition to make the application special is **GRANTED**.

The application is eligible for accelerated examination and the petition complies with the conditions for granting the application special status pursuant to the "Change to Practice for Petitions in Patent Applications to Make Special and for Accelerated Examination" published June 26, 2006, in the Federal Register. (71 Fed. Reg. 36323).

The prosecution of the instant application will be conducted expeditiously according to the following guidelines.

1. The application will be docketed to an examiner and taken up for action within two weeks of the date of this decision.

2. Restriction Practice:
   If the examiner determines that the claims are not directed to a single invention, a telephone request to elect one single invention will be made pursuant to MPEP 812.01. As a prerequisite to the grant of this petition, the applicant has agreed to make an oral election, by telephone, without traverse. If the applicant refuses to make an election without traverse, or the examiner cannot reach the applicant after a reasonable effort, the examiner will treat the first claimed invention (invention defined by claim 1) as having being constructively elected without traverse for examination.

3. Office action:

If it is determined that, after appropriate consultation, there is a potential rejection or any other issue to be addressed, the examiner will telephone the applicant and arrange an interview to discuss and resolve the issue. An Office action, other than a Notice of Allowance and Fee(s) Due (Notice of Allowance), will not be issued unless either: 1) an interview was conducted but did not result in agreed to action that places the application in condition for allowance, or, 2) a determination is made that an interview would be unlikely to result in the application being placed in condition for allowance, and 3) an internal conference has been held to review any rejection of any claim.

4. Time for Reply:
An Office action other than a Notice of Allowance or a final Office action will set a shortened statutory period of one month or thirty days, whichever is longer, for reply with no extension of time available under 37 CFR 1.136(a). Failure to timely file a reply within this non-extendible period for reply will result in the abandonment of the application.

5. Reply by Applicant:
A timely reply to an Office action other than the Notice of Allowance must be submitted electronically via EFS or EFS-web and limited to addressing the rejections, objections and requirement made. Any amendment that attempts to: 1) add claims which would result in more than three pending independent claims or more than twenty pending total claims; 2) present claims not encompassed by the pre-examination search or an updated accelerated examination support document; or 3) present claims that are directed a non-elected invention or an invention other than that previously claimed and examined in the application, will be treated as not fully responsive and will not be entered.

For any amendment to the claims (including any new claim) that is not encompassed by the accelerated examination support document, applicant must provide an updated accelerated examination support document that encompasses the amended or new claims at the time of filing of the amendment.

To proceed expeditiously with the examination, it is recommended that a reply with amendments made to any claim or with any new claim being added be accompanied by an updated accelerated examination support document or a statement explaining how the amended or new claim is supported by the original accelerated examination support document.

6. Information Disclosure Statement (IDS):
Any IDS filed during prosecution must be submitted electronically via EFS or EFS-web, accompanied by an updated accelerated examination support document, and be in compliance with 37 CFR 1.97 and 1.98.

7. Post-Allowance Processing:
To expedite processing of the allowed application into a patent, the applicant must: 1) pay the required fees within one month of the date of the Notice of Allowance, and 2) not

file any post allowance papers not required by the Office. In no event may the issue fee be paid and accepted later than three months from the date of the Notice of Allowance.

8. After-Final and Appeal Procedures:
   To expedite prosecution, after receiving the final Office action, applicant must: 1) promptly file a notice of appeal, an appeal brief and appeal fees; and 2) not request a pre-appeal brief conference.

   Any amendment, affidavit or other evidence filed after final Office action must comply with applicable rules and the requirements outlined in numbered paragraphs 5 and 6 above.

   On appeal, the application will proceed according to normal appeal procedures. After appeal, the application will again be treated special.

9. Proceedings Outside the Normal Examination Process:
   If the application becomes involved in a proceeding that is outside the normal examination process (e.g., a secrecy order, national security review, interference proceeding, petitions under 37 CFR 1.181, 182 or 183), the application will be treated special before and after such proceeding.

10. Final Disposition:
    The twelve-month goal of this accelerated examination procedure ends with a final disposition. The mailing of a final Office action, a Notice of Allowance, the filing of a Notice of Appeal, or the filing of a Request for Continued Examination (RCE) is the final disposition.

If, during prosecution, a paper is not filed electronically using EFS-web, a reply is filed but is not fully responsive, the application is involved in an appeal, or a proceeding outside normal examination process, the application will still be examined expeditiously, however, the final disposition may occur more than twelve months from the filing of the application. In addition, Applicant is reminded that due to the dismissal of the previous petition submission, examination may not be completed within twelve months of the filing date of the application.

Any inquiry regarding this decision should be directed the undersigned whose telephone number is (571) 272-4147.

If attempts to reach the undersigned by telephone are unsuccessful, Tod Swann, Quality Assurance Specialist, can be reached at (571) 272-3612.

/Kim Huynh/

Kim Huynh, Quality Assurance Specialist
Technology Center 2400
Computer Architecture, Software and Information Security

UNITED STATES PATENT AND TRADEMARK OFFICE

Commissioner for Patents
United States Patent and Trademark Office
P.O. Box 1450
Alexandria, VA 22313-1450
www.uspto.gov

J C PATENTS
4 VENTURE, SUITE 250
IRVINE CA 92618

COPY MAILED

NOV 1 0 2009

OFFICE OF PETITIONS

In re Application of	:	
Chen et al.	:	
Application No. 12/059,032	:	ON PETITION
Filed: March 31, 2008	:	
Attorney Docket No. JCLA26150	:	

This is a notice regarding your request for acceptance of a fee deficiency submission under 37 CFR 1.28. On September 1, 1998, the Court of Appeals for the Federal Circuit held that 37 CFR 1.28(c) is the sole provision governing the time for correction of the erroneous payment of the issue fee as a small entity. **See DH Technology v. Synergystex International, Inc. 154 F.3d 1333, 47 USPQ2d 1865 (Fed. Cir. Sept. 1, 1998).**

The Office no longer investigates or rejects original or reissue applications under 37 CFR 1.56. **1098 Off. Gaz. Pat. Office 502 (January 3, 1989)**. Therefore, nothing in this Notice is intended to imply that an investigation was done.

Your fee deficiency submission under 37 CFR 1.28 is hereby **ACCEPTED**.

This application is no longer entitled to small entity status. Accordingly, all future fees paid in this application must be paid at the large entity rate.

Telephone inquiries concerning this decision should be directed to Joan Olszewski at (571) 272-7751.

/Liana Walsh/
Liana Walsh
Petitions Examiner
Office of Petitions

UNITED STATES PATENT AND TRADEMARK OFFICE

UNITED STATES DEPARTMENT OF COMMERCE
United States Patent and Trademark Office
Address: COMMISSIONER FOR PATENTS
P.O. Box 1450
Alexandria, Virginia 22313-1450
www.uspto.gov

APPLICATION NO.	FILING DATE	FIRST NAMED INVENTOR	ATTORNEY DOCKET NO.	CONFIRMATION NO.
12/059,055	03/31/2008	Glen H. Handlogten	ROC920080008US1	4321

59452 7590 06/23/2008
CANTOR COLBURN LLP - IBM ROCHESTER DIVISION
20 Church Street
22nd Floor
Hartford, CT 06103

EXAMINER
BULLOCK JR, LEWIS ALEXANDER

ART UNIT	PAPER NUMBER
2193	

MAIL DATE	DELIVERY MODE
06/23/2008	PAPER

Please find below and/or attached an Office communication concerning this application or proceeding.

The time period for reply, if any, is set in the attached communication.

UNITED STATES PATENT AND TRADEMARK OFFICE

Commissioner for Patents
United States Patent and Trademark Office
P.O. Box 1450
Alexandria, VA 22313-1450
www.uspto.gov

03/13/2008

Greg O'Bradovich
Cantor Colburn LLP
20 Church Street, 22nd Floor
Hartford, CT 06103-3207

In re Application of:
Roth et al.
Serial No.: 12/059,055
Filed: March 31, 2008
Docket: ROC920080008US1
Title: SYSTEMS, METHODS AND COMPUTER PROGRAM PRODUCTS FOR HARDWARE ASSISTS FOR MICROCODED FLOATING POINT DIVIDE AND SQUARE ROOT

DECISION ON PETITION TO MAKE SPECIAL FOR NEW APPLICATION UNDER 37 C.F.R. § 1.102 & M.P.E.P. § 708.02

This is a decision on the petition filed on March 31, 2008to make the above-identified application special for accelerated examination procedure under 37 C.F.R. § 1.102(d).

The petition to make the application special is **GRANTED**.

REGULATION AND PRACTICE

A grantable petition to make special under 37 C.F.R. § 1.102(d) and pursuant to the "Change to Practice for Petitions in Patent Applications to Make Special and for Accelerated Examination" published in the Federal Register on June 26, 2006 (71 Fed. Reg. 36323), must satisfy the following conditions:

I. Conditions Regarding the Application:

1. the application must be a non-reissue utility or design application filed under 37 CFR 1.111(a);
2. the application, the petition and the required fees must be filed electronically using the USPTO's electronic filing system (EFS), or EFS-web; if not filed electronically, a statement asserting that EFS and EFS-web were not available during the normal business hours.
3. at the time of filing, the application must be complete under 37 CFR 1.51 and in condition for examination;
4. the application must contain three or fewer independent claims and twenty or fewer total claims and the claims must be directed to a single invention.

II. Conditions Regarding the Petition:

The petition must:

1. be filed with the application;

2. include a statement that applicant agrees not to separately argue the patentability of any independent claim during any appeal in the application;

3. include a statement that applicant agrees to make an election without traverse in a telephone interview.

4. include a statement that applicant agrees to conduct such an interview when requested by the examiner.

5. include a statement, made based on a good faith belief, that a preexamination search in compliance with the following requirements, was conducted, including an identification of the filed of search by United States class and subclass, where applicable, and for database searches, the search logic or chemical structure or sequence used as a query, the name of the file(s) searched and the database service, and the date of the search.

The preexamination search must:

5.1 involve U.S. patents and patent application publications, foreign patent documents, and non-patent literature, unless the applicant can justify with reasonable certainty that no references more pertinent than those already identified are likely to be found in the eliminated sources and includes such a justification with this statement;

5.2. be directed to the claimed invention and encompass all of the features of the claims, giving the claims the broadest reasonable expectation;

5.3. encompass the disclosed features that may be claimed.

6. must provide in support of the petition an accelerated examination support document. An accelerated examination support document must include:

6.1. an information disclosure statement (IDS) in compliance with 37 CFR 1.98 citing each reference deemed most closely related to the subject matter of each of the claims;

6.2. an identification of all the limitations in the claims that are disclosed by the reference specifying where the limitation is disclosed in the cited reference;

6.3. a detailed explanation of how each of the claims are patentable over the references cited with particularity required by 37 CFR 1.111(b) and (c);

6.4. a concise statement of the utility of the invention as defined in each of the independent claims (unless the application is a design application);

6.5. a showing of where each limitation of the claims finds support under 35 USC 112, first paragraph, in the written description of the specification. If applicable, the showing must also identify: (1) each means- (or step) plus-function claim element that invokes consideration under 35 UDC 112, sixth paragraph; and (2) the structure, material, or acts in the specification that corresponds to each means- (or step) plus-function claim element that invokes consideration under 35 UDC 112, sixth paragraph; if the application claims the benefit of one or more applications under title 35, United States Code, the showing must also include where each limitation of the claims finds support under 35 USC 112, first paragraph, in each such application in which such supports exists;

6.6. an identification of any cited references that may be disqualified under 35 USC 103(c).

REVIEW OF FACTS

The conditions I1-I4, II1-II4, II5.1-II5.3, and II.6.1-II.6.6 above are met. Therefore, the petition meets the required conditions to make the above-identified application special for accelerated examination procedure under 37 C.F.R. § 1.102(d).

DECISION

For the above-stated reasons, the petition is **Granted**.

The application is eligible for accelerated examination and the petition complies with the conditions for granting the application special status pursuant to the "Change to Practice for Petitions in Patent Applications to Make Special and for Accelerated Examination" published June 26, 2006, in the Federal Register. (71 Fed. Reg. 36323).

The prosecution of the instant application will be conducted expeditiously according to the following guidelines.

1. The application will be docketed to an examiner and taken up for action within two weeks of the date of this decision.

2. Restriction Practice:
   If the examiner determines that the claims are not directed to a single invention, a telephone request to elect one single invention will be made pursuant to MPEP 812.01. As a prerequisite to the grant of this petition, the applicant has agreed to make an oral election, by telephone, without traverse. If the applicant refuses to make an election without traverse, or the examiner cannot reach the applicant after a reasonable effort, the examiner will treat the first claimed invention (invention defined by claim 1) as having being constructively elected without traverse for examination.

3. Office action:
   If it is determined that, after appropriate consultation, there is a potential rejection or any other issue to be addressed, the examiner will telephone the applicant and arrange an interview to discuss and resolve the issue. An Office action, other than a Notice of Allowance and Fee(s) Due (Notice of Allowance), will not be issued unless either: 1) an interview was conducted but did not result in agreed to action that places the application in condition for allowance, or, 2) a determination is made that an interview would be unlikely to result in the application being placed in condition for allowance, and 3) an internal conference has been held to review any rejection of any claim.

4. Time for Reply:

An Office action other than a Notice of Allowance or a final Office action will set a shortened statutory period of one month or thirty days, whichever is longer, for reply with no extension of time available under 37 CFR 1.136(a). Failure to timely file a reply within this non-extendible period for reply will result in the abandonment of the application.

5. Reply by Applicant:
A timely reply to an Office action other than the Notice of Allowance must be submitted electronically via EFS or EFS-web and limited to addressing the rejections, objections and requirement made. Any amendment that attempts to: 1) add claims which would result in more than three pending independent claims or more than twenty pending total claims; 2) present claims not encompassed by the pre-examination search or an updated accelerated examination support document; or 3) present claims that are directed a non-elected invention or an invention other than that previously claimed and examined in the application, will be treated as not fully responsive and will not be entered.

   For any amendment to the claims (including any new claim) that is not encompassed by the accelerated examination support document, applicant must provide an updated accelerated examination support document that encompasses the amended or new claims at the time of filing of the amendment.

   To proceed expeditiously with the examination, it is recommended that a reply with amendments made to any claim or with any new claim being added be accompanied by an updated accelerated examination support document or a statement explaining how the amended or new claim is supported by the original accelerated examination support document.

6. Information Disclosure Statement (IDS):
Any IDS filed during prosecution must be submitted electronically via EFS or EFS-web, accompanied by an updated accelerated examination support document, and be in compliance with 37 CFR 1.97 and 1.98.

7. Post-Allowance Processing:
To expedite processing of the allowed application into a patent, the applicant must: 1) pay the required fees within one month of the date of the Notice of Allowance, and 2) not file any post allowance papers not required by the Office. In no event may the issue fee be paid and accepted later than three months from the date of the Notice of Allowance.

8. After-Final and Appeal Procedures:
To expedite prosecution, after receiving the final Office action, applicant must: 1) promptly file a notice of appeal, an appeal brief and appeal fees; and 2) not request a pre-appeal brief conference.

   Any amendment, affidavit or other evidence filed after final Office action must comply with applicable rules and the requirements outlined in numbered paragraphs 5 and 6 above.

On appeal, the application will proceed according to normal appeal procedures. After appeal, the application will again be treated special.

9. Proceedings Outside the Normal Examination Process:
   If the application becomes involved in a proceeding that is outside the normal examination process (e.g., a secrecy order, national security review, interference proceeding, petitions under 37 CFR 1.181, 182 or 183), the application will be treated special before and after such proceeding.

10. Final Disposition:
    The twelve-month goal of this accelerated examination procedure ends with a final disposition. The mailing of a final Office action, a Notice of Allowance, the filing of a Notice of Appeal, or the filing of a Request for Continued Examination (RCE) is the final disposition.

If, during prosecution, a paper is not filed electronically using EFS-web, a reply is filed but is not fully responsive, the application is involved in an appeal, or a proceeding outside normal examination process, the application will still be examined expeditiously, however, the final disposition may occur more than twelve months from the filing of the application.

Any inquiry regarding this decision should be directed Gail Hayes, Quality Assurance Specialist, at (571) 272-3591.

/Gail Hayes/

Gail Hayes, Quality Assurance Specialist
Technology Center 2100

UNITED STATES PATENT AND TRADEMARK OFFICE

Commissioner for Patents
United States Patent and Trademark Office
P.O. Box 1450
Alexandria, VA 22313-1450
www.uspto.gov

COPY MAILED

JAN 30 2009

OFFICE OF PETITIONS

BUCHANAN, INGERSOLL & ROONEY PC
POST OFFICE BOX 1404
ALEXANDRIA VA 22313-1404

In re Application of:	:	
Kaoukhov et al.	:	
Application No. 12/059086	:	DECISION DISMISSING
Filing or 371(c) Date: 03/31/2008	:	PETITION UNDER
Title of Invention:	:	37 CFR 1.47(a)
ADMINISTRATION OF AVERMECTIN/	:	
MILBEMYCIN COMPOUNDS FOR THE	:	
TREATMENT OF OPHTHALMIC PATHOLOGIES	:	

This is in response to the Petition Under 37 C.F.R. § 1.47 and Submission of Combined Declaration and Power of Attorney for Utility or Design Patent Application, and Statement of Facts Under 37 C.F.R. 1.47(A), filed November 24, 2008, to allow the other inventor(s) to proceed with the application on behalf of himself or herself and the nonsigning inventor(s). The petition is properly treated under 37 CFR 1.47(a).

The petition is **dismissed**.

Rule 47 applicant is given TWO (2) MONTHS from the mailing date of this decision to reply, correcting the below-noted deficiencies. Any reply should be entitled "Request for Reconsideration of Petition Under [insert the applicable code section]"; should only address the deficiencies noted below, except that the reply may include an oath or declaration executed by the non-signing inventor. Failure to respond will result in abandonment of the application. Any extensions of time will be governed by 37 CFR 1.136(a).

Background

The above-identified application was filed on March 31, 2008, without, a fully executed oath or declaration. The Office mailed a Notice to File Missing Parts of Nonprovisional Application ("Notice"), on April 22, 2008, requiring *inter alia*, a properly signed oath or declaration.

Applicant files the instant petition in response to the Notice and alleges that six letters were sent to the nonsigning inventor requesting his signature of a power of attorney. Four of the letters werein connection with a foreign application which applicant states corresponds to the above-

identified U.S. application, and two of the letters were in connection with the above-identified application. No response to any of the letters from the nonsigning inventor has been received.

Applicable Law, Rules and MPEP

A grantable petition under 37 CFR 1.47(a) requires: (1) proof that the non-signing inventor cannot be reached or refuses to sign the oath or declaration after having been presented with the application papers (specification, claims and drawings); (2) an acceptable oath or declaration in compliance with 35 U.S.C. §§ 115 and 116; (3) the petition fee; and (4) a statement of the last known address of the non-signing inventor. Applicant lacks item (1) set forth above.

As to item (1), the MPEP provides:

> A refusal by an inventor to sign an oath or declaration when the inventor has not been presented with the application papers does not itself suggest that the inventor is refusing to join the application unless it is clear that the inventor understands exactly what he or she is being asked to sign and refuses to accept the application papers. A copy of the application papers should be sent to the last known address of the non-signing inventor, or, if the nonsigning inventor is represented by counsel, to the address of the nonsigning inventor's attorney. The fact that an application may contain proprietary information does not relieve the 37 CFR 1.47 applicant of the responsibility to present the application papers to the inventor if the inventor is willing to receive the papers in order to sign the oath or declaration.

MPEP 409.03(d).

Analysis

Applicant has not presented evidence of a bona fide effort to present copy of the application papers to the non-signing inventor. Applicant must make a bona fide effort to present a copy of the application papers to the nonsigning inventor. The MPEP further provides

> Proof that a bona fide attempt was made to present a copy of the application papers (specification, including claims, drawings, and oath or declaration) to the nonsigning inventor for signature, but the inventor refused to accept delivery of the papers or expressly stated that the application papers should not be sent, may be sufficient. When there is an express oral refusal, that fact along with the time and place of the refusal must be stated in the statement of facts. When there is an express written refusal, a copy of the document evidencing that refusal must be made part of the statement of facts. The document may be redacted to remove material not related to the inventor's reasons for refusal.

MPEP 409.03(d).

The petition is dismissed without prejudice. Applicant is advised to file a Request for Reconsideration of Petition and include the requisite showing.

Finally, it is also noted that Applicant has attempted to claim the benefit of one or more provisional applications. Applicant is advised that for a benefit claim under 35 U.S.C. § 119(e), the later-filed application must be filed not later than 12 months after the filing date of the prior provisional application. Accord, 35 U.S.C. § 111(b)(5). See, also, MPEP 201.11(II).

Further correspondence with respect to this matter should be addressed as follows:

By mail:	Director for Patents PO Box 1450 Alexandria, VA 22313-1450
By FAX:	(571) 273-8300 Attn: Office of Petitions
By hand:	Customer Service Window Randolph Building 401 Dulany Street Alexandria, VA 22314

Telephone inquiries concerning this matter should be directed to the undersigned at (571) 272-3232.

/Derek L. Woods/
Derek L. Woods
Attorney
Office of Petitions

UNITED STATES PATENT AND TRADEMARK OFFICE

Commissioner for Patents
United States Patent and Trademark Office
P.O. Box 1450
Alexandria, VA 22313-1450
www.uspto.gov

BUCHANAN, INGERSOLL & ROONEY PC
POST OFFICE BOX 1404
ALEXANDRIA VA 22313-1404

MAILED

APR 24 2009

OFFICE OF PETITIONS

In re Application of:	:	
Kaoukhov et al.	:	
Application No. 12/059086	:	DECISION DISMISSING
Filing or 371(c) Date: 03/31/2008	:	PETITION UNDER
Title of Invention:	:	37 CFR 1.47(a)
ADMINISTRATION OF AVERMECTIN/	:	
MILBEMYCIN COMPOUNDS FOR THE	:	
TREATMENT OF OPHTHALMIC PATHOLOGIES	:	

This is in response to the Request for Reconsideration of Petition Under 37 CFR § 1.47(a), filed March 30, 2009, and including an oath/declaration executed by the previously nonsigning inventor.

In view of the joinder of the inventor, further consideration under 37 CFR 1.47(a) is not necessary and the Petition is considered to be moot. This application does not have any Rule 1.47(a) status and no such status should appear on the file wrapper. This application need not be returned to this Office for further consideration under 37 CFR 1.47(a).

The Declaration has been entered and made of record.

This application is being referred to Technology Center Art Unit 1623 for examination in the normal course of business.

Telephone inquiries related to this decision may be directed to the undersigned at (571) 272-3232.

/Derek L. Woods/
Derek L. Woods
Attorney
Office of Petitions

UNITED STATES PATENT AND TRADEMARK OFFICE

Commissioner for Patents
United States Patent and Trademark Office
P.O. Box 1450
Alexandria, VA 22313-1450
www.uspto.gov

MAIL

MAY 01 2008
DIRECTOR'S OFFICE
TECHNOLOGY CENTER 2600

LEVEQUE INTELLECTUAL PROPERTY LAW, P.C.
221 E. CHURCH STREET
FREDERICK MD 21701

In re Application of:
JAISWAL, PEEYUSH, et al.
Serial No.: 12/059,144
Filed: March 31, 2008

Title: **SPEECH RECOGNITION AND STATISTICS-BASED CALL ROUTE DETERMINATION**

DECISION ON PETITION TO MAKE SPECIAL FOR NEW APPLICATION UNDER 37 C.F.R. § 1.102 & M.P.E.P. § 708.02

This is a decision on the petition filed on March 31, 2008 to make the above-identified application special for accelerated examination procedure under 37 C.F.R. § 1.102(d).

The petition to make the application special is **DISMISSED**.

REGULATION AND PRACTICE

A grantable petition to make special under 37 C.F.R. § 1.102(d) and pursuant to the "Change to Practice for Petitions in Patent Applications to Make Special and for Accelerated Examination" published in the Federal Register on June 26, 2006 (71 Fed. Reg. 36323), must satisfy the following conditions:

I. Conditions Regarding the Application:

1. the application must be a non-reissue utility or design application filed under 37 CFR 1.111(a);
2. the application, the petition and the required fees must be filed electronically using the USPTO's electronic filing system (EFS), or EFS-web; if not filed electronically, a statement asserting that EFS and EFS-web were not available during the normal business hours.
3. at the time of filing, the application must be complete under 37 CFR 1.51 and in condition for examination;
4. the application must contain three or fewer independent claims and twenty or fewer total claims and the claims must be directed to a single invention.

II. Conditions Regarding the Petition:

The petition must:

1. be filed with the application;

2. include a statement that applicant agrees not to separately argue the patentability of any independent claim during any appeal in the application;

3. include a statement that applicant agrees to make an election without traverse in a telephone interview.

4. include a statement that applicant agrees to conduct such an interview when requested by the examiner.

5. include a statement, made based on a good faith belief, that a preexamination search in compliance with the following requirements, was conducted, including an identification of the filed of search by United States class and subclass, where applicable, and for database searches, the search logic or chemical structure or sequence used as a query, the name of the file(s) searched and the database service, and the date of the search.

The preexamination search must:

5.1 involve U.S. patents and patent application publications, foreign patent documents, and non-patent literature, unless the applicant can justify with reasonable certainty that no references more pertinent than those already identified are likely to be found in the eliminated sources and includes such a justification with this statement;

5.2. be directed to the claimed invention and encompass all of the features of the claims, giving the claims the broadest reasonable interpretation;

5.3. encompass the disclosed features that may be claimed.

6. must provide in support of the petition an accelerated examination support document. An accelerated examination support document must include:

6.1. an information disclosure statement (IDS) in compliance with 37 CFR 1.98 citing each reference deemed most closely related to the subject matter of each of the claims;

6.2. an identification of all the limitations in the claims that are disclosed by the reference specifying where the limitation is disclosed in the cited reference;

6.3. a detailed explanation of how each of the claims are patentable over the references cited with particularity required by 37 CFR 1.111(b) and (c);

6.4. a concise statement of the utility of the invention as defined in each of the independent claims (unless the application is a design application);

6.5. a showing of where each limitation of the claims finds support under 35 USC 112, first paragraph, in the written description of the specification. If applicable, the showing must also identify: (1) each means- (or step) plus-function claim element that invokes consideration under 35 USC 112, sixth paragraph; and (2) the structure, material, or acts in the specification that corresponds to each means- (or step) plus-function claim element that invokes consideration under 35 USC 112, sixth paragraph; if the application claims the benefit of one or more applications under title 35, United States Code, the showing must also include where each limitation of the claims finds support under 35 USC 112, first paragraph, in each such application in which such supports exists;

6.6. an identification of any cited references that may be disqualified under 35 USC 103(c).

REVIEW OF FACTS

The conditions set forth under section I. above are considered to have been met. However, the petition fails to comply with conditions set forth under section II. items 5.2, 5.3, and 6.5.

For these reasons cited above, the petition fails to meet the required conditions to be accorded special status under the accelerated examination procedure.

Regarding the requirement in item 5.2 and 5.3 above, the preexamination search document provided with the instant petition is deficient as follows: The US field of search and database searches which are to be provided under section 8(A) are not sufficient. Petitioner has not provided a classification search which identifies any specific subclasses within the classes 379, 704, and 715 where the claimed invention is **most likely** to be classified and **any other highly relevant subclasses within these classes as appropriate**. The search should focus at least on 379/88.16 , 88.19 and 88.20 for the claimed **IVR**; 379/ 142.01-142.15 for the claimed **Caller ID**; 379/219-241, 243-244, 265.02-266.1, 308-309 for the claimed **Call Routing**. The search logic used in the database searches is currently too narrow. The search used limited key words and operators. For example, only searching "DNIS" but not "Dialed number Identification Service" and searching "rout$" without searching "switch$".

Regarding the requirement in item 6.5 above, the "Accelerated Examination Support Document", is deficient because section 9(F) fails to include a showing of where ***each limitation of the claim*** finds support under the first paragraph of 35 USC 112 in the written description of the instant specification. Petitioner provides a broad statement that support is shown for claim 1 and identifies paragraphs 9-12 of the specification and figures 1-2, without providing any indication of a showing where each specific claim limitation finds support in the written description of the specification for the claim. Clarification is required.

If any request for reconsideration is filed, an updated preexamination search must be conducted as per items 5.2 and 5.3 above, and the Preexamination Search Document must be amended to indicate such; a new Information Disclosure Statement should be filed to cite any newly found prior art, and the Accelerated Examination Support Document must also be amended to include the necessary reference and discussion of any newly found and cited prior art in accordance with all of items 6 through 6.6 above.

DECISION

For the above-stated reasons, the petition is **dismissed**. The application will therefore be taken up by the examiner for action in its regular turn.

Petitioner is given a single opportunity to perfect the petition. Any request for reconsideration of this decision must be submitted within 1 (one) month or 30 (thirty) days, whichever is longer, (no extension of time under 37 CFR 1.136(a)) from the date of this decision in order to be considered timely. Any request for reconsideration must address the deficiencies indicated above.

Petitioner is reminded that, upon granting of the special status of the application on request for reconsideration, the application will be processed expeditiously. However, due to the dismissal

of the instant petition, examination may not be completed within twelve months of the filing date of the application.

Any inquiry regarding this decision should be directed to Michael Horabik, Quality Assurance Specialist, at (571) 272-3068.

Michael Horabik
Quality Assurance Specialist
Technology Center 2600
Communications

United States Patent and Trademark Office

~~Commissioner for Patents~~
United States Patent and Trademark Office
P.O. Box 1450
Alexandria, VA 22313-1450
www.uspto.gov

MAIL

JUN 23 2008

DIRECTOR'S OFFICE
TECHNOLOGY CENTER 2600

LEVEQUE INTELLECTUAL PROPERTY LAW, P.C.
221 E. CHURCH STREET
FREDERICK MD 21701

In re Application of:
JAISWAL, PEEYUSH et al,
Serial No.: 12/059,144
Filed: March 31, 2008

Title: **SPEECH RECOGNITION AND STATISTICS-BASED CALL ROUTE DETERMINATION**

DECISION ON PETITION TO MAKE SPECIAL FOR NEW APPLICATION UNDER 37 C.F.R. § 1.102 & M.P.E.P. § 708.02

This is a decision on the petition filed on May 28, 2008 requesting reconsideration to make the above-identified application special for accelerated examination procedure under 37 C.F.R. § 1.102(d).

All of the requirements to correct the deficiencies outlined in the petition decision mailed May 01, 2008 have been met.

The petition to make the application special is **GRANTED**.

The application is eligible for accelerated examination and the petition complies with the conditions for granting the application special status pursuant to the "Change to Practice for Petitions in Patent Applications to Make Special and for Accelerated Examination" published June 26, 2006, in the Federal Register. (71 Fed. Reg. 36323).

The prosecution of the instant application will be conducted expeditiously according to the following guidelines.

1. The application will be docketed to an examiner and taken up for action within two weeks of the date of this decision.

2. Restriction Practice:
   If the examiner determines that the claims are not directed to a single invention, a telephone request to elect one single invention will be made pursuant to MPEP 812.01. As a prerequisite to the grant of this petition, the applicant has agreed to make an oral election, by telephone, without traverse. If the applicant refuses to make an election

without traverse, or the examiner cannot reach the applicant after a reasonable effort, the examiner will treat the first claimed invention (invention defined by claim 1) as having being constructively elected without traverse for examination.

3. Office action:
If it is determined that, after appropriate consultation, there is a potential rejection or any other issue to be addressed, the examiner will telephone the applicant and arrange an interview to discuss and resolve the issue. An Office action, other than a Notice of Allowance and Fee(s) Due (Notice of Allowance), will not be issued unless either: 1) an interview was conducted but did not result in agreed to action that places the application in condition for allowance, or, 2) a determination is made that an interview would be unlikely to result in the application being placed in condition for allowance, and 3) an internal conference has been held to review any rejection of any claim.

4. Time for Reply:
An Office action other than a Notice of Allowance or a final Office action will set a shortened statutory period of one month or thirty days, whichever is longer, for reply with no extension of time available under 37 CFR 1.136(a). Failure to timely file a reply within this non-extendible period for reply will result in the abandonment of the application.

5. Reply by Applicant:
A timely reply to an Office action other than the Notice of Allowance must be submitted electronically via EFS or EFS-web and limited to addressing the rejections, objections and requirement made. Any amendment that attempts to: 1) add claims which would result in more than three pending independent claims or more than twenty pending total claims; 2) present claims not encompassed by the pre-examination search or an updated accelerated examination support document; or 3) present claims that are directed a non-elected invention or an invention other than that previously claimed and examined in the application, will be treated as not fully responsive and will not be entered.

   For any amendment to the claims (including any new claim) that is not encompassed by the accelerated examination support document, applicant must provide an updated accelerated examination support document that encompasses the amended or new claims at the time of filing of the amendment.

   To proceed expeditiously with the examination, it is recommended that a reply with amendments made to any claim or with any new claim being added be accompanied by an updated accelerated examination support document or a statement explaining how the amended or new claim is supported by the original accelerated examination support document.

6. Information Disclosure Statement (IDS):
Any IDS filed during prosecution must be submitted electronically via EFS or EFS-web, accompanied by an updated accelerated examination support document, and be in compliance with 37 CFR 1.97 and 1.98.

7. Post-Allowance Processing:

To expedite processing of the allowed application into a patent, the applicant must: 1) pay the required fees within one month of the date of the Notice of Allowance, and 2) not file any post allowance papers not required by the Office. In no event may the issue fee be paid and accepted later than three months from the date of the Notice of Allowance.

8. After-Final and Appeal Procedures:
   To expedite prosecution, after receiving the final Office action, applicant must: 1) promptly file a notice of appeal, an appeal brief and appeal fees; and 2) not request a pre-appeal brief conference.

   Any amendment, affidavit or other evidence filed after final Office action must comply with applicable rules and the requirements outlined in numbered paragraphs 5 and 6 above.

   On appeal, the application will proceed according to normal appeal procedures. After appeal, the application will again be treated special.

9. Proceedings Outside the Normal Examination Process:
   If the application becomes involved in a proceeding that is outside the normal examination process (e.g., a secrecy order, national security review, interference proceeding, petitions under 37 CFR 1.181, 182 or 183), the application will be treated special before and after such proceeding.

10. Final Disposition:
    The twelve month goal of this accelerated examination procedure ends with a final disposition. The mailing of a final Office action, a Notice of Allowance, the filing of a Notice of Appeal, or the filing of a Request for Continued Examination (RCE) is the final disposition.

If, during prosecution, a paper is not filed electronically using EFS-web, a reply is filed but is not fully responsive, the application is involved in an appeal, or a proceeding outside normal examination process, the application will still be examined expeditiously, however, the final disposition may occur more than twelve months from the filing of the application.

Any inquiry regarding this decision should be directed to Michael Horabik, Quality Assurance Specialist, at (571) 272-3068.

Michael Horabik
Quality Assurance Specialist
Technology Center 2600
Communications

UNITED STATES PATENT AND TRADEMARK OFFICE

UNITED STATES DEPARTMENT OF COMMERCE
United States Patent and Trademark Office
Address: COMMISSIONER FOR PATENTS
P.O. Box 1450
Alexandria, Virginia 22313-1450
www.uspto.gov

APPLICATION NO.	FILING DATE	FIRST NAMED INVENTOR	ATTORNEY DOCKET NO.	CONFIRMATION NO.
12/059,152	03/31/2008	Omer Bar-Ilan	IL920080040US1	4488

78148 7590 07/03/2008
KING & SPALDING
1180 PEACHTREE ST.
ATLANTA, GA 30309

EXAMINER
VINCENT, DAVID ROBERT

ART UNIT	PAPER NUMBER
2129	

MAIL DATE	DELIVERY MODE
07/03/2008	PAPER

Please find below and/or attached an Office communication concerning this application or proceeding.

The time period for reply, if any, is set in the attached communication.

UNITED STATES PATENT AND TRADEMARK OFFICE

Commissioner for Patents
United States Patent and Trademark Office
P.O. Box 1450
Alexandria, VA 22313-1450
www.uspto.gov

KING & SPALDING
1180 PEACHTREE ST.
ATLANTA GA 30309

In re Application of: Omer Bar-Ilan et al. Serial No.: 12/059,152 Filed: March 31, 2008 Docket: IL920080040US1 Title: EXPLOITING DOUBLE RESOLUTIONS FOR PROOF OPTIMIZATIONS	DECISION ON PETITION TO MAKE SPECIAL FOR NEW APPLICATION UNDER 37 C.F.R. § 1.102 & M.P.E.P. § 708.02

This is a decision on the petition filed on March 31, 2008 to make the above-identified application special for accelerated examination procedure under 37 C.F.R. § 1.102(d).

The petition to make the application special is **DISMISSED**.

REGULATION AND PRACTICE

A grantable petition to make special under 37 C.F.R. § 1.102(d) and pursuant to the "Change to Practice for Petitions in Patent Applications to Make Special and for Accelerated Examination" published in the Federal Register on June 26, 2006 (71 Fed. Reg. 36323), must satisfy the following conditions:

I. Conditions Regarding the Application:

1. the application must be a non-reissue utility or design application filed under 37 CFR 1.111(a);
2. the application, the petition and the required fees must be filed electronically using the USPTO's electronic filing system (EFS), or EFS-web; if not filed electronically, a statement asserting that EFS and EFS-web were not available during the normal business hours.
3. at the time of filing, the application must be complete under 37 CFR 1.51 and in condition for examination;
4. the application must contain three or fewer independent claims and twenty or fewer total claims and the claims must be directed to a single invention.

II. Conditions Regarding the Petition:

The petition must:

1. be filed with the application;

2. include a statement that applicant agrees not to separately argue the patentability of any dependent claim during any appeal in the application;

3. include a statement that applicant agrees to make an election without traverse in a telephone interview.

4. include a statement that applicant agrees to conduct such an interview when requested by the examiner.

5. include a statement, made based on a good faith belief, that a preexamination search in compliance with the following requirements, was conducted, including an identification of the field of search by United States class and subclass, where applicable, and for database searches, the search logic or chemical structure or sequence used as a query, the name of the file(s) searched and the database service, and the date of the search.

The preexamination search must:

5.1 involve U.S. patents and patent application publications, foreign patent documents, and non-patent literature, unless the applicant can justify with reasonable certainty that no references more pertinent than those already identified are likely to be found in the eliminated sources and includes such a justification with this statement;

5.2. be directed to the claimed invention and encompass all of the features of the claims, giving the claims the broadest reasonable interpretation;

5.3. encompass the disclosed features that may be claimed.

6. must provide in support of the petition an accelerated examination support document. An accelerated examination support document must include:

6.1. an information disclosure statement (IDS) in compliance with 37 CFR 1.98 citing each reference deemed most closely related to the subject matter of each of the claims;

6.2. an identification of all the limitations in the claims that are disclosed by the reference specifying where the limitation is disclosed in the cited reference;

6.3. a detailed explanation of how each of the claims are patentable over the references cited with particularity required by 37 CFR 1.111(b) and (c);

6.4. a concise statement of the utility of the invention as defined in each of the independent claims (unless the application is a design application);

6.5. a showing of where each limitation of the claims finds support under 35 USC 112, first paragraph, in the written description of the specification. If applicable, the showing must also identify: (1) each means- (or step) plus-function claim element that invokes consideration under 35 USC 112, sixth paragraph; and (2) the structure, material, or acts in the specification that corresponds to each means- (or step) plus-function claim element that invokes consideration under 35 USC 112, sixth paragraph; if the application claims the benefit of one or more applications under title 35, United States Code, the showing must also include where each limitation of the claims finds support under 35 USC 112, first paragraph, in each such application in which such supports exists;

6.6. an identification of any cited references that may be disqualified under 35 USC 103(c).

REVIEW OF FACTS

The conditions I.1 – I.4, II5.1, II.5.3, II.6.2 and II.6.6 above are considered to have been met. However, the petition fails to comply with conditions II.5.2, II.6.3 and II.6.5 above. Therefore, the petition fails to meet the required conditions to be accorded special status under the accelerated examination procedure.

Regarding the requirement of MPEP § 708.02(a)(I.)(H)[1] and item 5.2 above, the preexamination search must be directed to the (instant) claimed invention and encompass all of the features of the claims, giving the claims the *broadest reasonable interpretation.*

The search logic provided in the search document uses keywords from the claim and includes very few synonyms and/or alternative terms encompassing the claimed features and concepts, therefore fails to give the claim the broadest reasonable interpretation as required. Following are some examples of how the search terms can be expanded to include related words or phrases in a search query to broaden the database search:

(Bayes or Bayesian) and parsimon$
(Bayes or Bayesian) and (reduc$ or simpl$ or redun$)
(Bayes or Bayesian) and parsimon$ and (redund$ or double or pivot$)
(Bayes or Bayesian) and "validation sets"
(GP or (genetic adj program$)) and parsimon$
(GP or (genetic adj program$)) and (reduc$ or simpl$ or redun$)
(GP or (genetic adj program$)) and parsimon$ and (redund$ or double or pivot$)
(DAG or acyclic) and parsimon$
((satisfiability or SAT) with problem$) and parsimon$

In addition, based on the claimed subject matter, a search in the following class and subclasses is recommended, where most pertinent references are likely to be found : Class 706 subclasses 45-47 (Data Processing: Artificial Intelligence, Including Knowledge Processing System, Knowledge Representation And Reasoning Technique And Rule-Based Reasoning System). This search area was confirmed by an examiner in the pertinent art area (Class 706)

Regarding item 6.3 above , it should be noted that while applicant's detailed explanation of how each of the claims are patentable over the cited references (every reference fails to teach any limitation recited in the body of claim 1) is technically acceptable, not finding even one reference that teaches even one claimed limitation may be another indication of the inadequacy of the search. It is assumed that after the supplemental search is completed new references will be found that better read on the claimed invention and will be properly analyzed in the Support Document included with any renewed petition.

With respect to the requirement of MPEP § 708.02(a)(I.)(I)(5) and item 6.5 above, the Accelerated Examination Support Document only identifies specific figures and portions of text

[1] MPEP 8th ed. rev 5 August 2006

in the specification as providing support under 35 U.S.C. 112, First paragraph for claim 1 as a whole, but fails to identify ***each*** claim limitation and the ***corresponding support*** in the cited portions of specification, as required. Clarification and identification of support for each limitation in claim 1 is required.

DECISION

For the above-stated reasons, the petition is **dismissed**. The application will therefore be taken up by the examiner for action in its regular turn.

Petitioner is given a single opportunity to perfect the petition. Any request for reconsideration of this decision must be submitted within 1 (one) month or 30 (thirty) days, whichever is longer, (no extension of time under 37 CFR 1.136(a)) from the date of this decision in order to be considered timely. Any request for reconsideration must address the deficiencies indicated above.

Petitioner is reminded that, upon granting of the special status of the application on request for reconsideration, the application will be processed expeditiously. However, due to the dismissal of the instant petition, examination may not be completed within twelve months of the filing date of the application.

Any inquiry regarding this decision should be directed to the undersigned at (571) 272-3719. If attempts to reach the undersigned are unsuccessful, Mano Padmanabhan, Quality Assurance Specialist, Technology Center 2100 can be reached at (571)272-4210.

/Kakali Chaki/

Kakali Chaki, Quality Assurance Specialist
Technology Center 2100

UNITED STATES PATENT AND TRADEMARK OFFICE

UNITED STATES DEPARTMENT OF COMMERCE
United States Patent and Trademark Office
Address: COMMISSIONER FOR PATENTS
P.O. Box 1450
Alexandria, Virginia 22313-1450
www.uspto.gov

APPLICATION NO.	FILING DATE	FIRST NAMED INVENTOR	ATTORNEY DOCKET NO.	CONFIRMATION NO.
12/059,152	03/31/2008	Omer Bar-Ilan	IL920080040US1 (105071)	4488

78148 7590 12/08/2008
KING & SPALDING
1180 PEACHTREE ST.
ATLANTA, GA 30309

EXAMINER
VINCENT, DAVID ROBERT

ART UNIT	PAPER NUMBER
2129	

MAIL DATE	DELIVERY MODE
12/08/2008	PAPER

Please find below and/or attached an Office communication concerning this application or proceeding.

The time period for reply, if any, is set in the attached communication.

UNITED STATES PATENT AND TRADEMARK OFFICE

Commissioner for Patents
United States Patent and Trademark Office
P.O. Box 1450
Alexandria, VA 22313-1450
www.uspto.gov

KING & SPALDING
1180 PEACHTREE ST.
ATLANTA GA 30309

In re Application of: Omer Bar-Ilan et al. Serial No.: 12/059,152 Filed: March 31, 2008 Docket: IL920080040US1 Title: EXPLOITING DOUBLE RESOLUTIONS FOR PROOF OPTIMIZATIONS	DECISION ON PETITION TO MAKE SPECIAL FOR NEW APPLICATION UNDER 37 C.F.R. § 1.102 & M.P.E.P. § 708.02

This is a decision on the renewed petition filed on July 30, 2008 to make the above-identified application special for accelerated examination procedure under 37 C.F.R. § 1.102(d). The original petition, submitted March 31, 2008 was dismissed in the decision mailed on July 3, 2008.

The petition to make the application special is GRANTED.

The application is eligible for accelerated examination and the petition complies with the conditions for granting the application special status pursuant to the "Change to Practice for Petitions in Patent Applications to Make Special and for Accelerated Examination" published June 26, 2006, in the Federal Register. (71 Fed. Reg. 36323).

The prosecution of the instant application will be conducted expeditiously according to the following guidelines.

1. The application will be docketed to an examiner and taken up for action within two weeks of the date of this decision.

2. Restriction Practice:
   If the examiner determines that the claims are not directed to a single invention, a telephone request to elect one single invention will be made pursuant to MPEP 812.01. As a prerequisite to the grant of this petition, the applicant has agreed to make an oral election, by telephone, without traverse. If the applicant refuses to make an election without traverse, or the examiner cannot reach the applicant after a reasonable effort, the examiner will treat the first claimed invention (invention defined by claim 1) as having being constructively elected without traverse for examination.

3. Office action:
   If it is determined that, after appropriate consultation, there is a potential rejection or any other issue to be addressed, the examiner will telephone the applicant and arrange an interview to discuss and resolve the issue. An Office action, other than a Notice of Allowance and Fee(s) Due (Notice of Allowance), will not be issued unless either: 1) an interview was conducted but did not result in agreed to action that places the application in condition for allowance, or, 2) a determination is made that an interview would be unlikely to result in the application being placed in condition for allowance, and 3) an internal conference has been held to review any rejection of any claim.

4. Time for Reply:
   An Office action other than a Notice of Allowance or a final Office action will set a shortened statutory period of one month or thirty days, whichever is longer, for reply with no extension of time available under 37 CFR 1.136(a). Failure to timely file a reply within this non-extendible period for reply will result in the abandonment of the application.

5. Reply by Applicant:
   A timely reply to an Office action other than the Notice of Allowance must be submitted electronically via EFS or EFS-web and limited to addressing the rejections, objections and requirement made. Any amendment that attempts to: 1) add claims which would result in more than three pending independent claims or more than twenty pending total claims; 2) present claims not encompassed by the pre-examination search or an updated accelerated examination support document; or 3) present claims that are directed a non-elected invention or an invention other than that previously claimed and examined in the application, will be treated as not fully responsive and will not be entered.

   For any amendment to the claims (including any new claim) that is not encompassed by the accelerated examination support document, applicant must provide an updated accelerated examination support document that encompasses the amended or new claims at the time of filing of the amendment.

   To proceed expeditiously with the examination, it is recommended that a reply with amendments made to any claim or with any new claim being added be accompanied by an updated accelerated examination support document or a statement explaining how the amended or new claim is supported by the original accelerated examination support document.

6. Information Disclosure Statement (IDS):
   Any IDS filed during prosecution must be submitted electronically via EFS or EFS-web, accompanied by an updated accelerated examination support document, and be in compliance with 37 CFR 1.97 and 1.98.

7. Post-Allowance Processing:
   To expedite processing of the allowed application into a patent, the applicant must: 1) pay the required fees within one month of the date of the Notice of Allowance, and 2) not file any post allowance papers not required by the Office. In no event may the issue fee be paid and accepted later than three months from the date of the Notice of Allowance.

8. After-Final and Appeal Procedures:
   To expedite prosecution, after receiving the final Office action, applicant must: 1) promptly file a notice of appeal, an appeal brief and appeal fees; and 2) not request a pre-appeal brief conference.

   Any amendment, affidavit or other evidence filed after final Office action must comply with applicable rules and the requirements outlined in numbered paragraphs 5 and 6 above.

   On appeal, the application will proceed according to normal appeal procedures. After appeal, the application will again be treated special.

9. Proceedings Outside the Normal Examination Process:
   If the application becomes involved in a proceeding that is outside the normal examination process (e.g., a secrecy order, national security review, interference proceeding, petitions under 37 CFR 1.181, 182 or 183), the application will be treated special before and after such proceeding.

10. Final Disposition:
    The twelve month goal of this accelerated examination procedure ends with a final disposition. The mailing of a final Office action, a Notice of Allowance, the filing of a Notice of Appeal, or the filing of a Request for Continued Examination (RCE) is the final disposition.

If, during prosecution, a paper is not filed electronically using EFS-web, a reply is filed but is not fully responsive, the application is involved in an appeal, or a proceeding outside normal examination process, the application will still be examined expeditiously, however, the final disposition may occur more than twelve months from the filing of the application.

Any inquiry regarding this decision should be directed to the undersigned at (571) 272-3719.

/Kakali Chaki/

Kakali Chaki
Quality Assurance Specialist
Technology Center 2100

UNITED STATES PATENT AND TRADEMARK OFFICE

Commissioner for Patents
United States Patent and Trademark Office
P.O. Box 1450
Alexandria, VA 22313-1450
www.uspto.gov

Client 21058
c/o DARBY & DARBY P.C.
P.O. BOX 770
CHURCH STREET STATION
NEW YORK NY 10008-0770

COPY MAILED

AUG 25 2009

OFFICE OF PETITIONS

In re Application of
Vivek Gupta et al.
Application No. 12/059,208
Filed: March 31, 2008
Attorney Docket No. 21058/0208962-US0

DECISION ON PETITION
TO WITHDRAW
FROM RECORD

This is a decision on the Request to Withdraw as attorney or agent of record under 37 C.F.R. § 1.36(b), filed July 10, 2009.

The request is **APPROVED**.

A grantable request to withdraw as attorney/agent of record must be signed by every attorney/agent seeking to withdraw or contain a clear indication that one attorney is signing on behalf of another/others. A request to withdraw will not be approved unless at least 30 (thirty) days would remain between the date of approval and the later of the expiration date of a time to file a response or the expiration date of the maximum time period which can be extended under 37 C.F.R. § 1.136(a).

The request was signed by Marie Collazo on behalf of all attorneys/agents associated with customer number 75172. All attorneys/agents associated with customer number 75172 have been withdrawn.

Applicant is reminded that there is no attorney of record at this time.

The request to change the correspondence of record is not acceptable as the requested correspondence address is not that of (1) the inventor; or (2) an intervening assignee of the entire interest under 37 C.F.R. 3.71. Accordingly, all correspondence will be mailed to the first signing inventor at the first copied address below, since no assignee has properly intervened in this application. A courtesy copy of this decision will also be mailed to the address noted on the request. If this person(s) desire to receive future correspondence regarding this application then the proper power of attorney documents and/or a Statement under 37 CFR 3.73(b) must be submitted.

Telephone inquiries concerning this decision should be directed to Kimberly Inabinet at 571-272-4618.

Kimberly Inabinet
Petitions Examiner
Office of Petitions

cc: Vivek Gupta
16078 NW Andalusian Way
Portland, OR 97229

cc: Intel Corporation
2200 Mission College Boulevard
Santa Clara, CA 95054

UNITED STATES PATENT AND TRADEMARK OFFICE

UNITED STATES DEPARTMENT OF COMMERCE
United States Patent and Trademark Office
Address: COMMISSIONER FOR PATENTS
P.O. Box 1450
Alexandria, Virginia 22313-1450
www.uspto.gov

APPLICATION NUMBER	FILING OR 371(C) DATE	FIRST NAMED APPLICANT	ATTY. DOCKET NO./TITLE
12/059,208	03/31/2008	Vivek Gupta	21058/0208962-US0

CONFIRMATION NO. 4577

POWER OF ATTORNEY NOTICE

75172
Client 21058
c/o DARBY & DARBY P.C.
P.O. BOX 770
CHURCH STREET STATION
NEW YORK, NY 10008-0770

OC000000037479455

Date Mailed: 08/24/2009

NOTICE REGARDING CHANGE OF POWER OF ATTORNEY

This is in response to the Power of Attorney filed 07/10/2009.

- The withdrawal as attorney in this application has been accepted. Future correspondence will be mailed to the new address of record. 37 CFR 1.33.

/kainabinet/

Office of Data Management, Application Assistance Unit (571) 272-4000, or (571) 272-4200, or 1-888-786-0101

UNITED STATES PATENT AND TRADEMARK OFFICE

Commissioner for Patents
United States Patent and Trademark Office
P.O. Box 1450
Alexandria, VA 22313-1450
www.uspto.gov

MAIL

APR 08 2008

DIRECTOR'S OFFICE
TECHNOLOGY CENTER 2600

CONNOLLY BOVE LODGE & HUTZ LLP
1875 EYE STREET, N.W.
SUITE 1100
WASHINGTON DC 20036

In re Application of:
NAVON, YAAKOV, et al.
Serial No.: 12/059,309
Filed: March 31, 2008

Title: **CHARACTER SEGMENTATION BY SLICES**

DECISION ON PETITION TO MAKE SPECIAL FOR NEW APPLICATION UNDER 37 C.F.R. § 1.102 & M.P.E.P. § 708.02

This is a decision on the petition filed on March 31, 2008 to make the above-identified application special for accelerated examination procedure under 37 C.F.R. § 1.102(d).

The petition to make the application special is **DENIED**.

REGULATION AND PRACTICE

To be eligible for accelerated examination under 37 C.F.R. § 1.102(d) and pursuant to the "Change to Practice for Petitions in Patent Applications to Make Special and for Accelerated Examination" published in the Federal Register on June 26, 2006 (71 Fed. Reg. 36323), the following conditions must be satisfied:

1. The application must be a non-reissue utility or design application filed under 37 CFR 1.111(a);
2. The application, the petition and the required fees must be filed electronically using the USPTO's electronic filing system (EFS), or EFS-web; if not filed electronically, a statement asserting that EFS and EFS-web were not available during the normal business hours;
3. The application, at the time of filing, must be complete under 37 CFR 1.51 and in condition for examination;
4. The application must contain three or fewer independent claims and twenty or fewer total claims and the claims must be directed to a single invention.

The application as filed is not eligible for accelerated examination under 37 C.F.R. § 1.102(d) because the application, at the time of filing, was not complete. A "Notice to File Corrected Application Papers" was mailed on April 4, 2008.

Therefore, the petition is denied because the application was not complete at the time of filing as per item 3 above. After the application is considered complete by the Office of Initial Patent Examination (OIPE), it will be taken up by the examiner for action in its regular turn.

Any inquiry regarding this decision should be directed to Ken Wieder, Quality Assurance Specialist, at (571) 272-2986.

Kenneth A. Wieder
Quality Assurance Specialist
Technology Center 2600
Communications

UNITED STATES PATENT AND TRADEMARK OFFICE

Commissioner for Patents
United States Patent and Trademark Office
P.O. Box 1450
Alexandria, VA 22313-1450
www.uspto.gov

MAIL

JUN 10 2008

DIRECTOR'S OFFICE
TECHNOLOGY CENTER 2600

CONNOLLY BOVE LODGE & HUTZ LLP
1875 EYE STREET, N.W.
SUITE 1100
WASHINGTON DC 20036

In re Application of:
NAVON, YAAKOV, et al.
Serial No.: 12/059,309
Filed: March 31, 2008

Title: **CHARACTER SEGMENTATION BY SLICES**

DECISION ON PETITION TO MAKE SPECIAL FOR NEW APPLICATION UNDER 37 C.F.R. § 1.102 & M.P.E.P. § 708.02

This is a decision on the petition filed on March 31, 2008 to make the above-identified application special for accelerated examination procedure under 37 C.F.R. § 1.102(d). The petition was denied on April 8, 2008. The denial was based upon the application having defective drawings. It has subsequently been determined that the drawings were, at the time of filing, acceptable for examination purposes. The decision denying petition to make special mailed April 8, 2008 is vacated.

The petition to make the application special is **DISMISSED**.

REGULATION AND PRACTICE

A grantable petition to make special under 37 C.F.R. § 1.102(d) and pursuant to the "Change to Practice for Petitions in Patent Applications to Make Special and for Accelerated Examination" published in the Federal Register on June 26, 2006 (71 Fed. Reg. 36323), must satisfy the following conditions:

I. Conditions Regarding the Application:

1. the application must be a non-reissue utility or design application filed under 37 CFR 1.111(a);

2. the application, the petition and the required fees must be filed electronically using the USPTO's electronic filing system (EFS), or EFS-web; if not filed electronically, a statement asserting that EFS and EFS-web were not available during the normal business hours.

3. at the time of filing, the application must be complete under 37 CFR 1.51 and in condition for examination;

4. the application must contain three or fewer independent claims and twenty or fewer total claims and the claims must be directed to a single invention.

II. Conditions Regarding the Petition:

The petition must:

1. be filed with the application;

2. include a statement that applicant agrees not to separately argue the patentability of any independent claim during any appeal in the application;

3. include a statement that applicant agrees to make an election without traverse in a telephone interview.

4. include a statement that applicant agrees to conduct such an interview when requested by the examiner.

5. include a statement, made based on a good faith belief, that a preexamination search in compliance with the following requirements, was conducted, including an identification of the filed of search by United States class and subclass, where applicable, and for database searches, the search logic or chemical structure or sequence used as a query, the name of the file(s) searched and the database service, and the date of the search.

The preexamination search must:

5.1 involve U.S. patents and patent application publications, foreign patent documents, and non-patent literature, unless the applicant can justify with reasonable certainty that no references more pertinent than those already identified are likely to be found in the eliminated sources and includes such a justification with this statement;

5.2. be directed to the claimed invention and encompass all of the features of the claims, giving the claims the broadest reasonable interpretation;

5.3. encompass the disclosed features that may be claimed.

6. must provide in support of the petition an accelerated examination support document. An accelerated examination support document must include:

6.1. an information disclosure statement (IDS) in compliance with 37 CFR 1.98 citing each reference deemed most closely related to the subject matter of each of the claims;

6.2. an identification of all the limitations in the claims that are disclosed by the reference specifying where the limitation is disclosed in the cited reference;

6.3. a detailed explanation of how each of the claims are patentable over the references cited with particularity required by 37 CFR 1.111(b) and (c);

6.4. a concise statement of the utility of the invention as defined in each of the independent claims (unless the application is a design application);

6.5. a showing of where each limitation of the claims finds support under 35 USC 112, first paragraph, in the written description of the specification. If applicable, the showing must also identify: (1) each means- (or step) plus-function claim element that invokes consideration under 35 USC 112, sixth paragraph; and (2) the structure, material, or acts in the specification that corresponds to each means- (or step) plus-function claim element that invokes consideration under 35 USC 112, sixth paragraph; if the application claims the benefit of one or more applications under title 35, United States Code, the showing must also include where each limitation of the claims finds support under 35 USC 112, first paragraph, in each such application in which such supports exists;

6.6. an identification of any cited references that may be disqualified under 35 USC 103(c).

REVIEW OF FACTS

The conditions set forth under section I. above are considered to have been met. However, the petition fails to comply with conditions set forth under section II. items 5.2 and 5.3.

For these reasons cited above, the petition fails to meet the required conditions to be accorded special status under the accelerated examination procedure.

Regarding the requirement in item 5.2 and 5.3 above, the preexamination search document provided with the instant petition is deficient as follows: The US field of search and database searches which are to be provided under section 8(A) are not sufficient. In addition to the search areas provided, applicant would also need to search in the following class/ subclasses: 358/453; 382/168, 171, 173.

Additionally, the Support Document only discusses one reference whereas, the IDS includes additional cited references. All documents included with the IDS in support of a petition for accelerated examination must be discussed in the Support Document as applicable to item 6 above.

If any request for reconsideration is filed, an updated preexamination search must be conducted as per items 5.2 and 5.3 above, and the Preexamination Search Document must be amended to indicate such; and the Accelerated Examination Support Document must also be amended to include the necessary reference and discussion of any newly found and cited prior art in accordance with all of items 6 through 6.6 above.

DECISION

For the above-stated reasons, the petition is **dismissed**. The application will therefore be taken up by the examiner for action in its regular turn.

Petitioner is given a single opportunity to perfect the petition. Any request for reconsideration of this decision must be submitted within 1 (one) month or 30 (thirty) days, whichever is longer, (no extension of time under 37 CFR 1.136(a)) from the date of this decision in order to be considered timely. Any request for reconsideration must address the deficiencies indicated above.

Petitioner is reminded that, upon granting of the special status of the application on request for reconsideration, the application will be processed expeditiously. However, due to the dismissal of the instant petition, examination may not be completed within twelve months of the filing date of the application.

Any inquiry regarding this decision should be directed to Ken Wieder, Quality Assurance Specialist, at (571) 272-2986.

Kenneth A. Wieder
Quality Assurance Specialist
Technology Center 2600
Communications

UNITED STATES PATENT AND TRADEMARK OFFICE

Commissioner for Patents
United States Patent and Trademark Office
P.O. Box 1450
Alexandria, VA 22313-1450
www.uspto.gov

MAIL

JUL 16 2008

DIRECTOR'S OFFICE
TECHNOLOGY CENTER 2600

CONNOLLY BOVE LODGE & HUTZ LLP
1875 EYE STREET, N.W.
SUITE 1100
WASHINGTON DC 20036

In re Application of:
NAVON, YAAKOV, et al.
Serial No.: 12/059,309
Filed: March 31, 2008

Title: **CHARACTER SEGMENTATION BY SLICES**

DECISION ON PETITION TO MAKE SPECIAL FOR NEW APPLICATION UNDER 37 C.F.R. § 1.102 & M.P.E.P. § 708.02

This is a decision on the petition filed on July 10, 2008 requesting reconsideration to make the above-identified application special for accelerated examination procedure under 37 C.F.R. § 1.102(d).

The petition to make the application special is **GRANTED**.

The application is eligible for accelerated examination and the petition complies with the conditions for granting the application special status pursuant to the "Change to Practice for Petitions in Patent Applications to Make Special and for Accelerated Examination" published June 26, 2006, in the Federal Register. (71 Fed. Reg. 36323).

The prosecution of the instant application will be conducted expeditiously according to the following guidelines.

1. The application will be docketed to an examiner and taken up for action within two weeks of the date of this decision.

2. Restriction Practice:
   If the examiner determines that the claims are not directed to a single invention, a telephone request to elect one single invention will be made pursuant to MPEP 812.01. As a prerequisite to the grant of this petition, the applicant has agreed to make an oral election, by telephone, without traverse. If the applicant refuses to make an election without traverse, or the examiner cannot reach the applicant after a reasonable effort, the

examiner will treat the first claimed invention (invention defined by claim 1) as having being constructively elected without traverse for examination.

3. Office action:
If it is determined that, after appropriate consultation, there is a potential rejection or any other issue to be addressed, the examiner will telephone the applicant and arrange an interview to discuss and resolve the issue. An Office action, other than a Notice of Allowance and Fee(s) Due (Notice of Allowance), will not be issued unless either: 1) an interview was conducted but did not result in agreed to action that places the application in condition for allowance, or, 2) a determination is made that an interview would be unlikely to result in the application being placed in condition for allowance, and 3) an internal conference has been held to review any rejection of any claim.

4. Time for Reply:
An Office action other than a Notice of Allowance or a final Office action will set a shortened statutory period of one month or thirty days, whichever is longer, for reply with no extension of time available under 37 CFR 1.136(a). Failure to timely file a reply within this non-extendible period for reply will result in the abandonment of the application.

5. Reply by Applicant:
A timely reply to an Office action other than the Notice of Allowance must be submitted electronically via EFS or EFS-web and limited to addressing the rejections, objections and requirement made. Any amendment that attempts to: 1) add claims which would result in more than three pending independent claims or more than twenty pending total claims; 2) present claims not encompassed by the pre-examination search or an updated accelerated examination support document; or 3) present claims that are directed a non-elected invention or an invention other than that previously claimed and examined in the application, will be treated as not fully responsive and will not be entered.

   For any amendment to the claims (including any new claim) that is not encompassed by the accelerated examination support document, applicant must provide an updated accelerated examination support document that encompasses the amended or new claims at the time of filing of the amendment.

   To proceed expeditiously with the examination, it is recommended that a reply with amendments made to any claim or with any new claim being added be accompanied by an updated accelerated examination support document or a statement explaining how the amended or new claim is supported by the original accelerated examination support document.

6. Information Disclosure Statement (IDS):
Any IDS filed during prosecution must be submitted electronically via EFS or EFS-web, accompanied by an updated accelerated examination support document, and be in compliance with 37 CFR 1.97 and 1.98.

7. Post-Allowance Processing:
   To expedite processing of the allowed application into a patent, the applicant must: 1) pay the required fees within one month of the date of the Notice of Allowance, and 2) not file any post allowance papers not required by the Office. In no event may the issue fee be paid and accepted later than three months from the date of the Notice of Allowance.

8. After-Final and Appeal Procedures:
   To expedite prosecution, after receiving the final Office action, applicant must: 1) promptly file a notice of appeal, an appeal brief and appeal fees; and 2) not request a pre-appeal brief conference.

   Any amendment, affidavit or other evidence filed after final Office action must comply with applicable rules and the requirements outlined in numbered paragraphs 5 and 6 above.

   On appeal, the application will proceed according to normal appeal procedures. After appeal, the application will again be treated special.

9. Proceedings Outside the Normal Examination Process:
   If the application becomes involved in a proceeding that is outside the normal examination process (e.g., a secrecy order, national security review, interference proceeding, petitions under 37 CFR 1.181, 182 or 183), the application will be treated special before and after such proceeding.

10. Final Disposition:
    The twelve month goal of this accelerated examination procedure ends with a final disposition. The mailing of a final Office action, a Notice of Allowance, the filing of a Notice of Appeal, or the filing of a Request for Continued Examination (RCE) is the final disposition.

If, during prosecution, a paper is not filed electronically using EFS-web, a reply is filed but is not fully responsive, the application is involved in an appeal, or a proceeding outside normal examination process, the application will still be examined expeditiously, however, the final disposition may occur more than twelve months from the filing of the application.

Any inquiry regarding this decision should be directed to Ken Wieder, Quality Assurance Specialist, at (571) 272-2986.

Kenneth A. Wieder
Quality Assurance Specialist
Technology Center 2600
Communications

UNITED STATES PATENT AND TRADEMARK OFFICE

Commissioner for Patents
United States Patent and Trademark Office
P.O. Box 1450
Alexandria, VA 22313-1450
www.uspto.gov

FOLEY & LARDNER LLP
P.O. BOX 80278
SAN DIEGO, CA 92138-0278

MAILED

APR 07 2009

OFFICE OF PETITIONS

In re Application of	:	
Laurent Desclos, et al.	:	
Application No. 12/059,346	:	DECISION ON PETITION
Filed: March 31, 2008	:	TO WITHDRAW
Attorney Docket No. 024833-4101	:	FROM RECORD
	:	

This is a decision on the Request to Withdraw as attorney or agent of record under 37 C.F.R. § 1.36(b), filed February 25, 2009.

The request is **DISMISSED** as moot.

A review of the file record indicates that the power of attorney to Foley & Lardner, LLP has been revoked by the assignee of the patent application on February 18, 2009. Accordingly, the request to withdraw under 37 C.F.R. § 1.36(b) is moot.

All future communications from the Office will continue to be directed to the below-listed address until otherwise notified by applicant.

Telephone inquires concerning this decision should be directed to undersigned at 571-272-1642.

/AMW//
April M. Wise
Petitions Examiner
Office of Petitions

UNITED STATES PATENT AND TRADEMARK OFFICE

UNITED STATES DEPARTMENT OF COMMERCE
United States Patent and Trademark Office
Address: COMMISSIONER FOR PATENTS
P.O. Box 1450
Alexandria, Virginia 22313-1450
www.uspto.gov

APPLICATION NO.	FILING DATE	FIRST NAMED INVENTOR	ATTORNEY DOCKET NO.	CONFIRMATION NO.
12/059,379	03/31/2008	Ki-Back KIM	1235-601	4847

7590 01/08/2010
THE FARRELL LAW FIRM, LLP
290 Broadhollow Road
Suite 210E
Melville, NY 11747

EXAMINER
MANSOURY, NOURALI

ART UNIT	PAPER NUMBER
2475	

MAIL DATE	DELIVERY MODE
01/08/2010	PAPER

DECISION GRANTING PETITION UNDER 37 CFR 1.138(d)

The declaration of express abandonment is recognized

This is in response to the petition under 37 CFR 1.138(d), requesting for a refund of any previously paid search fee and excess claims fee in the above-identified application.

The petition is granted.

The express abandonment is recognized. Any previously paid search fee and excess claims fee are hereby refunded.

Telephone inquiries should be directed to the Office of Data Management at (571) 272-4200.

Betty Powell

Patent Publication Branch
Office of Data Management

FORM PET651G (Rev. 08/07)

UNITED STATES PATENT AND TRADEMARK OFFICE

UNITED STATES DEPARTMENT OF COMMERCE
United States Patent and Trademark Office
Address: COMMISSIONER FOR PATENTS
P.O. Box 1450
Alexandria, Virginia 22313-1450
www.uspto.gov

HONEYWELL INTERNATIONAL INC.
PATENT SERVICES
101 COLUMBIA ROAD
P O BOX 2245
MORRISTOWN, NJ 07962-2245

Mail Date: 04/21/2010

Applicant	: Stuart Leslie	: DECISION ON REQUEST FOR
Patent Number	: 7635271	: RECALCULATION of PATENT
Issue Date	: 12/22/2009	: TERM ADJUSTMENT IN VIEW
Appliction No	: 12/059,411	: OF WYETH AND NOTICE OF INTENT TO
Filed	: 03/31/2008	: ISSUE CERTIFICATE OF CORRECTION
		:

The Request for Recalculation is **GRANTED** to the extent indicated.

The patent term adjustment has been determined to be **0** days. The USPTO will *sua sponte* issue a certificate of correction reflecting the amount of PTA days determined by the recalculation.

Prior to the issuance of the certificate of correction, the USPTO will afford patentee an opportunity to be heard and request reconsideration. Accordingly, patentee has **one month or thirty (30) days**, whichever is longer, to file a request for reconsideration of this patent term adjustment calculation. See 35 U.S.C. 154(b)(3)(B)(ii) and 37 CFR 1.322(a)(4). No extensions of time will be granted under 37 CFR 1.136.

Patentee should use document code PET.OP if electronically filing a request for reconsideration of this patent term adjustment calculation. The patentee must also include the information required by 37 CFR 1.705(b)(2) and the fee required by 37 CFR 1.18(e). If patentee does not file a timely request for reconsideration of this patent term adjustment calculation including the information required by 37 CFR 1.705(b)(2) and the fee required by 37 CFR 1.18(e), the USPTO will issue a certificate of correction reflecting the PTA determination noted above.

Patentee should be aware that in order to preserve the right to review in the United States District Court for the District of Columbia of the USPTO patent term adjustment determination, patentee must ensure that he or she also take the steps required under 35 U.S.C. 154(b)(4)(A) in a timely manner. Nothing in the request for recalculation should be construed as providing an alternative time frame for commencing a civil action under 35 U.S.C. 154(b)(4)(A).

Any questions concerning this decision should be directed to the Office of Patent Legal Administration at 571-272-7702.

UNITED STATES PATENT AND TRADEMARK OFFICE

Commissioner for Patents
United States Patent and Trademark Office
P.O. Box 1450
Alexandria, VA 22313-1450
www.uspto.gov

ANATOLIY ROKHVARGER
APT. 4C
1280 EAST 12TH STREET
BROOKLYN, NY 11230

COPY MAILED

MAY 19 2008

OFFICE OF PETITIONS

In re Application of	:	
Anatoliy Rokhvarger	:	
Application No. 12/059,430	:	DECISION ON PETITION
Filed: March 31, 2008	:	TO MAKE SPECIAL UNDER
Attorney Docket No.	:	37 CFR 1.102(c)(1)
	:	

This is a decision on the petition under 37 CFR 1.102(c)(1), filed March 31, 2008, to make the above-identified application special based on applicant's age as set forth in M.P.E.P. § 708.02, Section IV.

The petition is **GRANTED**.

A grantable petition to make an application special under 37 CFR 1.102(c)(1) and MPEP § 708.02, Section IV: Applicant's Age must be accompanied by evidence showing that at least one of the applicants is 65 years of age, or more, such as a birth certificate or a statement by applicant. No fee is required

The instant petition includes a copy of applicant's passport and driver's license. Accordingly, the above-identified application has been accorded "special" status.

Telephone inquiries concerning this decision should be directed to undersigned at 571-272-1642.

All other inquiries concerning either the examination or status of the application should be directed to the Technology Center.

The application is being referred to the Office of Patent Application Processing to await a reply the Notice to File Corrected Application Papers (Notice) mailed April 4, 2008. This application will be accorded "special" status once pre-examination processing is complete.

April M. Wise
Petitions Examiner
Office of Petitions

UNITED STATES PATENT AND TRADEMARK OFFICE

Commissioner for Patents
United States Patent and Trademark Office
P.O. Box 1450
Alexandria, VA 22313-1450
www.uspto.gov

BRIAN ROFFE, ESQ
75 WOOD LANE
WOODSBURGH, NY 11598

MAILED

JUL 02 2010

OFFICE OF PETITIONS

In re Application of
David S. Breed
Application No. 12/059,456
Filed: March 31, 2008
Attorney Docket No. ITI-079

DECISION ON PETITION
TO MAKE SPECIAL UNDER
37 CFR 1.102(c)(1)

This is a decision on the petition under 37 CFR 1.102(c)(1), filed March 25, 2010, to make the above-identified application special based on applicant's age as set forth in MPEP § 708.02, Section IV.

The petition is **GRANTED**.

A grantable petition to make an application special under 37 CFR 1.102(c)(1) and MPEP § 708.02, Section IV: Applicant's Age must be accompanied by evidence showing that at least one of the applicants is 65 years of age, or more, such as a birth certificate or a statement by applicant. No fee is required

The instant petition includes a statement from the sole inventor that he is 65 years of age or older. Accordingly, the above-identified application has been accorded "special" status.

This application file is being referred to Technology Center Art Unit 3661 for examination in due course.

Telephone inquiries concerning this decision should be directed to the undersigned at (571) 272-3226. All other inquiries concerning the processing of the application should be addressed to the Office of Patent Application Processing at (571) 272-4000.

Andrea Smith
Petitions Examiner
Office of Petitions

UNITED STATES PATENT AND TRADEMARK OFFICE

UNITED STATES DEPARTMENT OF COMMERCE
United States Patent and Trademark Office
Address: COMMISSIONER FOR PATENTS
P.O. Box 1450
Alexandria, Virginia 22313-1450
www.uspto.gov

APPLICATION NO.	FILING DATE	FIRST NAMED INVENTOR	ATTORNEY DOCKET NO.	CONFIRMATION NO.
12/059,465	03/31/2008	David Bell	GB20080074US1 (163-234)	5001

49267 7590 05/06/2008
KEUSEY, TUTUNJIAN & BITETTO, P.C.
20 CROSSWAYS PARK NORTH, SUITE 210
WOODBURY, NY 11797

EXAMINER

ART UNIT	PAPER NUMBER
2624	

MAIL DATE	DELIVERY MODE
05/06/2008	PAPER

Please find below and/or attached an Office communication concerning this application or proceeding.

The time period for reply, if any, is set in the attached communication.

UNITED STATES PATENT AND TRADEMARK OFFICE

Commissioner for Patents
United States Patent and Trademark Office
P.O. Box 1450
Alexandria, VA 22313-1450
www.uspto.gov

MAILED
FROM DIRECTORS OFFICE

MAY 06 2008

TECHNOLOGY CENTER 3600

Keusey, Tutunjian & Bitetto PC
20 Crossways Park North, Suite 210
Woodbury, NY 11797

In re application of	:	**DECISION ON PETITION**
David Bell, et al.	:	**TO MAKE SPECIAL FOR**
Application No. 12/059,465	:	**NEW APPLICATION**
Filed: March 31, 2008	:	**UNDER 37 CFR 1.102**
For: SYSTEMS AND METHODS FOR GENERATING PATTERN KEYS FOR USE IN NAVIGATION SYSTEMS TO PREDICT USED DETINATIONS		

This is a decision on the petition filed on March 31, 2008 to make the above-identified application special for accelerated examination procedure under 37 C.F.R. § 1.102(d).

The petition to make the application special is **DISMISSED**.

REGULATION AND PRACTICE

A grantable petition to make special under 37 C.F.R. § 1.102(d) and pursuant to the "Change to Practice for Petitions in Patent Applications to Make Special and for Accelerated Examination" published in the Federal Register on June 26, 2006 (71 Fed. Reg. 36323), must satisfy the following conditions:

I. Conditions Regarding the Application:

1. the application must be a non-reissue utility or design application filed under 37 CFR 1.111(a);

2. the application, the petition and the required fees must be filed electronically using the USPTO's electronic filing system (EFS), or EFS-web; if not filed electronically, a statement asserting that EFS and EFS-web were not available during the normal business hours.

3. at the time of filing, the application must be complete under 37 CFR 1.51 and in condition for examination;

4. the application must contain three or fewer independent claims and twenty or fewer total claims and the claims must be directed to a single invention.

II. Conditions Regarding the Petition:

The petition must:

1. be filed with the application;

2. include a statement that applicant agrees not to separately argue the patentability of any independent claim during any appeal in the application;

3. include a statement that applicant agrees to make an election without traverse in a telephone interview.

4. include a statement that applicant agrees to conduct such an interview when requested by the examiner.

5. include a statement, made based on a good faith belief, that a preexamination search in compliance with the following requirements, was conducted, including an identification of the field of search by United States class and subclass, where applicable, and for database searches, the search logic or chemical structure or sequence used as a query, the name of the file(s) searched and the database service, and the date of the search.

The preexamination search must:

5.1 involve U.S. patents and patent application publications, foreign patent documents, and non-patent literature, unless the applicant can justify with reasonable certainty that no references more pertinent than those already identified are likely to be found in the eliminated sources and includes such a justification with this statement;

5.2. be directed to the claimed invention and encompass all of the features of the claims, giving the claims the broadest reasonable expectation;

5.3. encompass the disclosed features that may be claimed.

6. must provide in support of the petition an accelerated examination support document. An accelerated examination support document must include:

6.1. an information disclosure statement (IDS) in compliance with 37 CFR 1.98 citing each reference deemed most closely related to the subject matter of each of the claims;

6.2. an identification of all the limitations in the claims that are disclosed by the reference specifying where the limitation is disclosed in the cited reference;

6.3. a detailed explanation of how each of the claims are patentable over the references cited with particularity required by 37 CFR 1.111(b) and (c);

6.4. a concise statement of the utility of the invention as defined in each of the independent claims (unless the application is a design application);

6.5. a showing of where each limitation of the claims finds support under 35 USC 112, first paragraph, in the written description of the specification. If applicable, the showing must also identify: (1) each means- (or step) plus-function claim element that invokes consideration under 35 UDC 112, sixth paragraph; and (2) the structure, material, or acts in the specification that corresponds to each means- (or step) plus-function claim element that invokes consideration under 35 UDC 112, sixth paragraph; if the application claims the benefit of one or more applications under title 35, United States Code, the showing must also include where each limitation of the claims finds support under 35 USC 112, first paragraph, in each such application in which such supports exists;

6.6. an identification of any cited references that may be disqualified under 35 USC 103(c).

REVIEW OF FACTS

The petition fails to comply with conditions II.5.2, II.6.2, and II.6.5, above.

As to condition II.5.2, the petition lacks an indication of a preexamination search that encompasses all of the features of the claims. Specifically, there does not appear to be an adequate classification search. A proper classification search for this invention needs to include a search of 701/27 (where the application is classified), 701/23, 25, 26; 340/995.19, 995.22, 995.23; and 382/156
With respect to the required text search of the US Patents database, the petition provides search logic that is acceptable for this database. However, the search logic used for the Espacnet database is not sufficient. The USPTO website has an example of the proper manner of performing and documenting a preexamination search for Accelerated Examination petitions at: http://www.uspto.gov/web/patents/accelerated/. Additionally, an example of an acceptable search logic for the Espacnet database is provided below:

automatic and guidance and route and (neural network) and (pattern learning)

The sample of search logic is not meant to be the sole search logic that can or should be employed in this application, but is meant solely as an example for applicant's assistance. The sample search logic provided above can also apply to searching the NPL databases. Finally, in general, in addition to the PCT database, a search of the EPO and JPO databases are also necessary to qualify as a complete search of the foreign databases.

As to condition II.6.2, an AESD that contains a list of references in the information disclosure statement (IDS) of the AESD, but does not include any identification and explanation for those references that are not required to be submitted in the IDS of the AESD (*i.e.*, references that are not most closely related to the subject matter of each of the claims), will be deemed insufficient for lack of identification and explanation. If applicant wishes to cite references that are not required in an AESD for the examiner to consider, applicant may submit such references in a separate IDS in compliance with 37 CFR 1.97 and 1.98. Applicant should clearly identify the IDS of the AESD that is in support of the petition to make special and, similarly, applicant should clearly identify the separate IDS that is not in support of the petition. Consistent with 37 CFR 10.18, any reference submitted in a separate IDS that is not part of an AESD will be treated as a representation by applicant to the USPTO that no reference submitted in the separate IDS is deemed closer to the subject matter of at least one claim than the references provided in the AESD.

A supplemental AESD is required if a reference being submitted in an IDS is deemed more closely related to the subject matter of at least one claim than the references provided in the previously-filed AESD. Consistent with 37 CFR 10.18, any reference submitted in a separate IDS that is not part of an AESD is a representation by applicant to the USPTO that no reference submitted in the separate IDS is deemed closer to the subject matter of at least one claim than the references provided in the AESD. If applicant deems references found after the initial filing to be closer to the subject matter of at least one claim than the references provided in the AESD, then applicant needs to supplement the AESD to account for these references.

Applicant is required to submit an accelerated examination support document (AESD) that includes an IDS in compliance with 37 CFR 1.98 citing each reference deemed most closely related to the subject matter of each of the claims (whether in independent or dependent form). Specifically:

> **(1)** Applicant **is not** required to cite the references that are only relevant to the general subject matter of the claims because there are references that are more closely related to the subject matter of the claims. Applicant is also not required to cite a reference that is cumulative to any other reference cited in the IDS.
> **(2)** Applicant **is** required to cite any reference that establishes, by itself or in combination with other information, a prima facie case of unpatentability of a claim (see 37 CFR 1.56(b)) in the IDS of the AESD.
> **(3)** Applicant **is** required to cite the reference that discloses the most limitations in the independent claim.
> **(4)** Applicant **is** required to cite any reference that discloses a limitation of an independent claim that is not shown in the other references.
> **(5)** Applicant **is** required to cite any reference that discloses a limitation of a dependent claim that is not shown in the other references.

Currently, since it is required that the most closely related references are to be submitted with the petition, all 17 of the references submitted are considered to be "most closely related" and need to be completely addressed in the Support Document. There currently is not an adequate listing of all the limitations (or portions thereof) in the claim that are disclosed in each of the cited references, specifying where each of the limitations (or portions thereof) are disclosed in each of the references.

Additionally, there currently is not an adequate listing of all the limitations (or portions thereof) in the claim that are disclosed in each of the cited references, specifying where each of the limitations (or portions thereof) are disclosed in each of the references. It is noted that there are explanations of the disclosures of the references, but it is not clear if the limitations (or a portion thereof) of each claim are clearly taught by the reference or not. That must be made clear. The location of the claimed individual elements taught by the cited references must be provided.

The USPTO website has an example of the proper manner of documenting limitations taught by cited art, and the manner of explaining claim patentability over the references, for an Accelerated Examination Support Document at: http://www.uspto.gov/web/patents/accelerated/.

As to condition to II.6.5, the showing of where each limitation of each of the claims finds support under 35 USC 112 in the written description of the application is insufficient. For each claimed limitation the petition needs to identify specific passages, or at least a single paragraph where each separate limitation finds support. Listing broadly a figure or pages of the specification for each claim limitation does not comply with what is required.

Therefore, the petition fails to meet the required conditions to be accorded special status under the accelerated examination procedure.

DECISION

For the above-stated reasons, the petition is **DISMISSED**. The application will therefore be taken up by the examiner for action in its regular turn.

Petitioner is given a single opportunity to perfect the petition. Any request for reconsideration of this decision must be submitted within 1 (one) month or 30 (thirty) days, whichever is longer, (no extension of time under 37 CFR 1.136(a)) from the date of this decision in order to be considered timely. Any request for reconsideration must address the deficiencies indicated above.

Petitioner is reminded that, upon granting of the special status of the application on request for reconsideration, the application will be processed expeditiously. However, due to the dismissal of the instant petition, examination may not be completed within twelve months of the filing date of the application.

Any inquiry regarding this decision should be directed to Steven N. Meyers, Quality Assurance Specialist, at (571) 272-6611.

Steven N. Meyers,
Quality Assurance Specialist
Technology Center 3600

Sm/sm: 5/4/08

UNITED STATES PATENT AND TRADEMARK OFFICE

Commissioner for Patents
United States Patent and Trademark Office
P.O. Box 1450
Alexandria, VA 22313-1450
www.uspto.gov

MAILED
FROM DIRECTORS OFFICE

JUN 1 1 2008

TECHNOLOGY CENTER 3600

Keusey, Tutunjian & Bitetto PC
20 Crossways Park North, Suite 210
Woodbury, NY 11797

In re application of
David Bell, et al.
Application No. 12/059,465
Filed: March 31, 2008
For: SYSTEMS AND METHODS FOR GENERATING PATTERN KEYS FOR USE IN NAVIGATION SYSTEMS TO PREDICT USED DETINATIONS

DECISION ON PETITION TO MAKE SPECIAL FOR NEW APPLICATION UNDER 37 CFR 1.102

This is a decision on the renewed petition filed on June 6, 2008 to make the above-identified application special for accelerated examination procedure under 37 C.F.R. § 1.102(d).

The petition to make the application special is **GRANTED**.

The application is eligible for accelerated examination and the petition complies with the conditions for granting the application special status pursuant to the "Change to Practice for Petitions in Patent Applications to Make Special and for Accelerated Examination" published June 26, 2006, in the Federal Register. (71 Fed. Reg. 36323).

The prosecution of the instant application will be conducted expeditiously according to the following guidelines.

1. The application will be docketed to an examiner and taken up for action within two weeks of the date of this decision.

2. Restriction Practice:
If the examiner determines that the claims are not directed to a single invention, a telephone request to elect one single invention will be made pursuant to MPEP 812.01. As a prerequisite to the grant of this petition, the applicant has agreed to make an oral election, by telephone, without traverse. If the applicant refuses to make an election without traverse, or the examiner cannot reach the applicant after a reasonable effort, the examiner will treat the first claimed invention (invention defined by claim 1) as having being constructively elected without traverse for examination.

3. Office action:
If it is determined that, after appropriate consultation, there is a potential rejection or any other issue to be addressed, the examiner will telephone the applicant and arrange an interview to discuss and resolve the issue. An Office action, other than a Notice of Allowance and Fee(s) Due (Notice of Allowance), will not be issued unless either: 1) an interview was conducted but did not result in agreed to action that places the application in condition for allowance, or, 2) a determination is made that an interview would be unlikely to result in the application being placed in condition for allowance, and 3) an internal conference has been held to review any rejection of any claim.

4. Time for Reply:
An Office action other than a Notice of Allowance or a final Office action will set a shortened statutory period of one month or thirty days, whichever is longer, for reply with no extension of time available under 37 CFR 1.136(a). Failure to timely file a reply within this non-extendible period for reply will result in the abandonment of the application.

5. Reply by Applicant:
A timely reply to an Office action other than the Notice of Allowance must be submitted electronically via EFS or EFS-web and limited to addressing the rejections, objections and requirement made. Any amendment that attempts to: 1) add claims which would result in more than three pending independent claims or more than twenty pending total claims; 2) present claims not encompassed by the pre-examination search or an updated accelerated examination support document; or 3) present claims that are directed to a non-elected invention or an invention other than that previously claimed and examined in the application, will be treated as not fully responsive and will not be entered.

For any amendment to the claims (including any new claim) that is not encompassed by the accelerated examination support document, applicant must provide an updated accelerated examination support document that encompasses the amended or new claims at the time of filing of the amendment.

To proceed expeditiously with the examination, it is recommended that a reply with amendments made to any claim or with any new claim being added be accompanied by an updated accelerated examination support document or a statement explaining how the amended or new claim is supported by the original accelerated examination support document.

6. Information Disclosure Statement (IDS):
Any IDS filed during prosecution must be submitted electronically via EFS or EFS-web, accompanied by an updated accelerated examination support document, and be in compliance with 37 CFR 1.97 and 1.98.

7. Post-Allowance Processing:
To expedite processing of the allowed application into a patent, the applicant must: 1) pay the required fees within one month of the date of the Notice of Allowance, and 2) not file any post allowance papers not required by the Office. In no event may the issue

fee be paid and accepted later than three months from the date of the Notice of Allowance.

8. After-Final and Appeal Procedures:
To expedite prosecution, after receiving the final Office action, applicant must: 1) promptly file a notice of appeal, an appeal brief and appeal fees; and 2) not request a pre-appeal brief conference.

Any amendment, affidavit or other evidence filed after final Office action must comply with applicable rules and the requirements outlined in numbered paragraphs 5 and 6 above.

On appeal, the application will proceed according to normal appeal procedures. After appeal, the application will again be treated special.

9. Proceedings Outside the Normal Examination Process:
If the application becomes involved in a proceeding that is outside the normal examination process (e.g., a secrecy order, national security review, interference proceeding, petitions under 37 CFR 1.181, 182 or 183), the application will be treated special before and after such proceeding.

10. Final Disposition:
The twelve month goal of this accelerated examination procedure ends with a final disposition. The mailing of a final Office action, a Notice of Allowance, the filing of a Notice of Appeal, or the filing of a Request for Continued Examination (RCE) is the final disposition.

If, during prosecution, a paper is not filed electronically using EFS-web, a reply is filed but is not fully responsive, the application is involved in an appeal, or a proceeding outside normal examination process, the application will still be examined expeditiously, however, the final disposition may occur more than twelve months from the filing of the application.

Any inquiry regarding this decision should be directed to Quality Assurance Specialist Steven N. Meyers, at (571) 272-6611.

Steven N. Meyers,
Quality Assurance Specialist
Technology Center 3600

Sm/sm: 6/11/08

UNITED STATES PATENT AND TRADEMARK OFFICE

Commissioner for Patents
United States Patent and Trademark Office
P.O. Box 1450
Alexandria, VA 22313-1450
www.uspto.gov

In re Application of :
Mark Dennis Larson :

Application No. 12059510 :DECISION ON PETITION TO MAKE SPECIAL
Filed: :UNDER 37 CFR 1.102(c)(1)
:

Attorney Docket No. 1562.002A

This is a decision on the electronic petition under 37 CFR 1.102 (c)(1) ,filed 31-MAR-2008 to make the above-identified application special based on applicant's age as set forth in MPEP § 708.02, Section IV.

The petition is **GRANTED**.

A grantable petition to make an application special under 37 CFR 1.102(c)(1), MPEP § 708.02, Section IV: Applicant's Age must include a statement by applicant or a registered practitioner having evidence that applicant is at least 65 years of age. No fee is required.

Accordingly, the above-identified application has been accorded “special” status and will be taken up for action by the examiner upon the completion of all pre-examination processing.

Telephone inquires concerning this electronic decision should be directed to the Electronic Business Center at 866-217-9197.

All other inquires concerning either the examination or status of the application should be directed to the Technology Center.

PTO/SB/130 (03-08)
Approved for use through 03/31/2008. OMB 0651- 0031
U.S. Patent and Trademark Office; U.S. DEPARTMENT OF COMMERCE
Under the Paperwork Reduction Act of 1995, no persons are required to respond to a collection of information unless it contains a valid OMB control number

PETITION TO MAKE SPECIAL BASED ON AGE FOR ADVANCEMENT OF EXAMINATION UNDER 37 CFR 1.102(c)(1)

Application Information

Application Number	12059510	Confirmation Number	5077	Filing Date	2008-03-31
Attorney Docket Number (optional)	1562.002A	Art Unit		Examiner	
First Named Inventor	Mark Dennis Larson				
Title of Invention	FAST SECURE METHOD AND PRESSING MEANS FOR QUICKLY CAUSING DATA STORAGE DEVICES TO HAVE UNRECOVERABLE DATA				

Attention: Office of Petitions

An application may be made special for advancement of examination upon filing of a petition showing that the applicant is 65 years of age, or more. No fee is required with such a petition. See 37 CFR 1.102(c)(1) and MPEP 708.02 (IV).

APPLICANT HEREBY PETITIONS TO MAKE SPECIAL FOR ADVANCEMENT OF EXAMINATION IN THIS APPLICATION UNDER 37 CFR 1.102(c)(1) and MPEP 708.02 (IV) ON THE BASIS OF THE APPLICANT'S AGE.

A grantable petition requires one of the following items:
(1) Statement by one named inventor in the application that he/she is 65 years of age, or more; or
(2) Certification by a registered attorney/agent having evidence such as a birth certificate, passport, driver's license, etc. showing one named inventor in the application is 65 years of age, or more.

Name of Inventor who is 65 years of age, or older

Given Name	Middle Name	Family Name	Suffix
Verlin	Duane	Larson	

A signature of the applicant or representative is required in accordance with 37 CFR 1.33 and 10.18.
Please see 37 CFR 1.4(d) for the format of the signature.

Select (1) or (2) :

○ (1) I am an inventor in this application and I am 65 years of age, or more.

◉ (2) I am an attorney or agent registered to practice before the Patent and Trademark Office, and I certify that I am in possession of evidence, and will retain such in the application file record, showing that the inventor listed above is 65 years of age, or more.

Signature	/WBUSKOP/	Date (YYYY-MM-DD)	2008-03-31
Name	Wendy Buskop	Registration Number	32202

PTO/SB/130 (03-08)
Approved for use through 03/31/2008. OMB 0651- 0031
U.S. Patent and Trademark Office; U.S. DEPARTMENT OF COMMERCE
Under the Paperwork Reduction Act of 1995, no persons are required to respond to a collection of information unless it contains a valid OMB control number

Privacy Act Statement

The Privacy Act of 1974 (P.L. 93-579) requires that you be given certain information in connection with your submission of the attached form related to a patent application or patent. Accordingly, pursuant to the requirements of the Act, please be advised that: (1) the general authority for the collection of this information is 35 U.S.C. 2(b)(2); (2) furnishing of the information solicited is voluntary; and (3) the principal purpose for which the information is used by the U.S. Patent and Trademark Office is to process and/or examine your submission related to a patent application or patent. If you do not furnish the requested information, the U.S. Patent and Trademark Office may not be able to process and/or examine your submission, which may result in termination of proceedings or abandonment of the application or expiration of the patent.

The information provided by you in this form will be subject to the following routine uses:

1. The information on this form will be treated confidentially to the extent allowed under the Freedom of Information Act (5 U.S.C. 552) and the Privacy Act (5 U.S.C. 552a). Records from this system of records may be disclosed to the Department of Justice to determine whether the Fr eedom of Information Act requires disclosure of these records.

2. A record from this system of records may be disclosed, as a routine use, in the course of presenting evidence to a court, magistrate, or administrative tribunal, including disclosures to opposing counsel in the course of settlement negotiations.

3. A record in this system of records may be disclosed, as a routine use, to a Member of Congress submitting a request involving an individual, to whom the record pertains, when the individual has requested assistance from the Member with respect to the subject matter of the record.

4. A record in this system of records may be disclosed, as a routine use, to a contractor of the Agency having need for the information in order to perform a contract. Recipients of information shall be required to comply with the requirements of the Privacy Act of 1974, as amended, pursuant to 5 U.S.C. 552a(m).

5. A record related to an International Application filed under the Patent Cooperation Treaty in this system of records may be disclosed, as a routine use, to the International Bureau of the World Intellectual Property Organization, pursuant to the Patent Cooperation Treaty.

6. A record in this system of records may be disclosed, as a routine use, to another federal agency for purposes of National Security review (35 U.S.C. 181) and for review pursuant to the Atomic Energy Act (42 U.S.C. 218(c)).

7. A record from this system of records may be disclosed, as a routine use, to the Administrator, General Services, or his/her designee, during an inspection of records conducted by GSA as part of that agency's responsibility to recommend improvements in records management practices and programs, under authority of 44 U.S.C. 2904 and 2906. Such disclosure shall be made in accordance with the GSA regulations governing inspection of records for this purpose, and any other relevant (i.e., GSA or Commerce) directive. Such disclosure shall not be used to make determinations about indivi duals.

8. A record from this system of records may be disclosed, as a routine use, to the public after either publication of the application pursuant to 35 U.S.C. 122(b) or issuance of a patent pursuant to 35 U.S.C. 151. Further, a record may be disclosed, subject to the limitations of 37 CFR 1.14, as a routine use, to the public if the record was filed in an application which became abandoned or in which the proceedings were terminated and which application is referenced by either a published application, an application open to public inspections or an issued patent.

9. A record from this system of records may be disclosed, as a routine use, to a Federal, State, or local law enforcement agency, if the USPTO becomes aware of a violation or potential violation of law or regulation.

UNITED STATES PATENT AND TRADEMARK OFFICE

UNITED STATES DEPARTMENT OF COMMERCE
United States Patent and Trademark Office
Address: COMMISSIONER FOR PATENTS
P.O. Box 1450
Alexandria, Virginia 22313-1450
www.uspto.gov

APPLICATION NO.	FILING DATE	FIRST NAMED INVENTOR	ATTORNEY DOCKET NO.	CONFIRMATION NO.
12/059,621	03/31/2008	Nils Haustein	DE920070189US1	5259

42640 7590 12/03/2008
DILLON & YUDELL LLP
8911 NORTH CAPITAL OF TEXAS HWY
SUITE 2110
AUSTIN, TX 78759

EXAMINER
GAFFIN, JEFFREY A

ART UNIT	PAPER NUMBER
2165	

MAIL DATE	DELIVERY MODE
12/03/2008	PAPER

Please find below and/or attached an Office communication concerning this application or proceeding.

The time period for reply, if any, is set in the attached communication.

UNITED STATES PATENT AND TRADEMARK OFFICE

Commissioner for Patents
United States Patent and Trademark Office
P.O. Box 1450
Alexandria, VA 22313-1450
www.uspto.gov

Jonathan E. Jobe
Dillon & Yudell LLP
8911 N. Capital of Texas Highway
Austin, Texas 78759

In re Application of:
Nils HAUSTEIN, et al
Serial No.: 12/059,621
Filed: March 31, 2008
Attorney Docket: DE920070189US1
Title: METHOD OF AND SYSTEM FOR SUGGESTION OF DIRECTORIES WHEN SAVING FILES

DECISION ON PETITION TO MAKE SPECIAL FOR NEW APPLICATION UNDER 37 C.F.R. § 1.102 & M.P.E.P. § 708.02

This is a decision on the petition filed on March 31, 2008 to make the above-identified application special for accelerated examination procedure under 37 C.F.R. § 1.102(d).

REGULATION AND PRACTICE

A grantable petition to make special under 37 C.F.R. § 1.102(d) and pursuant to the "Change to Practice for Petitions in Patent Applications to Make Special and for Accelerated Examination" published in the Federal Register on June 26, 2006 (71 Fed. Reg. 36323), must satisfy the following conditions:

I. Conditions Regarding the Application:

1. the application must be a non-reissue utility or design application filed under 37 CFR 1.111(a);
2. the application, the petition and the required fees must be filed electronically using the USPTO's electronic filing system (EFS), or EFS-web; if not filed electronically, a statement asserting that EFS and EFS-web were not available during the normal business hours.
3. at the time of filing, the application must be complete under 37 CFR 1.51 and in condition for examination;
4. the application must contain three or fewer independent claims and twenty or fewer total claims and the claims must be directed to a single invention.

II. Conditions Regarding the Petition:

The petition must:

1. be filed with the application;

2. include a statement that applicant agrees not to separately argue the patentability of any independent claim during any appeal in the application;

3. include a statement that applicant agrees to make an election without traverse in a telephone interview.

4. include a statement that applicant agrees to conduct such an interview when requested by the examiner.

5. include a statement, made based on a good faith belief, that a preexamination search in compliance with the following requirements, was conducted, including an identification of the filed of search by United States class and subclass, where applicable, and for database searches, the search logic or chemical structure or sequence used as a query, the name of the file(s) searched and the database service, and the date of the search.

The preexamination search must:

5.1 involve U.S. patents and patent application publications, foreign patent documents, and non-patent literature, unless the applicant can justify with reasonable certainty that no references more pertinent than those already identified are likely to be found in the eliminated sources and includes such a justification with this statement;

5.2. be directed to the claimed invention and encompass all of the features of the claims, giving the claims the broadest reasonable interpretation;

5.3. encompass the disclosed features that may be claimed.

6. must provide in support of the petition an accelerated examination support document. An accelerated examination support document must include:

6.1. an information disclosure statement (IDS) in compliance with 37 CFR 1.98 citing each reference deemed most closely related to the subject matter of each of the claims;

6.2. an identification of all the limitations in the claims that are disclosed by the reference specifying where the limitation is disclosed in the cited reference;

6.3. a detailed explanation of how each of the claims is patentable over the references cited with particularity required by 37 CFR 1.111(b) and (c);

6.4. a concise statement of the utility of the invention as defined in each of the independent claims (unless the application is a design application);

6.5. a showing of where each limitation of the claims finds support under 35 USC 112, first paragraph, in the written description of the specification. If applicable, the showing must also identify: (1) each means- (or step) plus-function claim element that invokes consideration under 35 USC 112, sixth paragraph; and (2) the structure, material, or acts in the specification that corresponds to each means- (or step) plus-function claim element that invokes consideration under 35 USC 112, sixth paragraph; if the application claims the benefit of one or more applications under title 35, United States Code, the showing must also include where each limitation of the claims finds support under 35 USC 112, first paragraph, in each such application in which such supports exists;

6.6. an identification of any cited references that may be disqualified under 35 USC 103(c).

REVIEW OF FACTS

The conditions I.1 - I.4, II.1 - II.4, II.5.1- II.5.3, II.6.1 - II.6.4 and II.6.6 above are considered to have been met. However, the petition fails to comply with condition II.6.5 above. Therefore, the petition fails to meet the required conditions to be accorded special status under the accelerated examination procedure.

Regarding to the requirement of MPEP § 708.02(a)(I.)(I)(5) and item II.6.5 above, the Accelerated Examination Support Document identifies pre-numbered paragraphs [0005] and [0006] of the instant specification as providing support for claim 1 and identifies pre-numbered paragraph [0007] as providing support for claim 2. However, the requirement of MPEP § 708.02(a)(I.)(I)(5) and item II.6.5 above clearly states that the petitioner is required to **specifically identify what corresponding elements in the figures** and/or **specifically identify where the corresponding written description in the cited portions of the instant specification** can find support under 35 U.S.C. § 112, first paragraph **for each limitation of the claims 1 and 2**. A review of the pre-numbered paragraphs [0005] – [0007] indicates that it is the Summary of the Invention. It is pointed out that the Summary of the Invention, as conventionally known, is a description of the invention presenting in a condensed form; thus, does not satisfy the requirement of providing the corresponding written description in the specification of each claimed limitation in the claims. It is pointed out that the written description requirement has several policy objectives. The essential goal of the description of the invention requirement is to clearly convey the information that an applicant has invented the subject matter which is claimed. Another objective is to put the examiner in possession of what the applicant claims as the invention – the written description requirement implements the principle that a patent application must describe the technology that is sought to be patented; the requirement serves both to satisfy the inventor's obligation to disclose the technologic knowledge upon which the application is based and to demonstrate that the applicants were in possession of the invention that is claimed. Further, the written description requirement promotes the progress of expedite examination by ensuring that applicants adequately describe their inventions in sufficient detail in their applications in exchange for the right to take-up out of order of examination. Thus, a **general statement** by pointing to the pre-numbered paragraphs [0005] – [0007] of the specification having a description of the invention in condensed form cannot be accepted to satisfy such a requirement of MPEP § 708.02(a)(I.)(I)(5) and item II.6.5 above.

DECISION

In the interest of expediting examination on the instant application, the petition to make the application special is **GRANTED**.

The application is eligible for accelerated examination and the petition complies with the conditions for granting the application special status pursuant to the "Change to Practice for Petitions in Patent Applications to Make Special and for Accelerated Examination" published June 26, 2006, in the Federal Register. (71 Fed. Reg. 36323).

The prosecution of the instant application will be conducted expeditiously according to the following guidelines.

1. The application will be docketed to an examiner and taken up for action within two weeks of the date of this decision.

2. Restriction Practice:
   If the examiner determines that the claims are not directed to a single invention, a telephone request to elect one single invention will be made pursuant to MPEP 812.01. As a prerequisite to the grant of this petition, the applicant has agreed to make an oral election, by telephone, without traverse. If the applicant refuses to make an election without traverse, or the examiner cannot reach the applicant after a reasonable effort, the examiner will treat the first claimed invention (invention defined by claim 1) as having being constructively elected without traverse for examination.

3. Office action:
   If it is determined that, after appropriate consultation, there is a potential rejection or any other issue to be addressed, the examiner will telephone the applicant and arrange an interview to discuss and resolve the issue. An Office action, other than a Notice of Allowance and Fee(s) Due (Notice of Allowance), will not be issued unless either: 1) an interview was conducted but did not result in agreed to action that places the application in condition for allowance, or, 2) a determination is made that an interview would be unlikely to result in the application being placed in condition for allowance, and 3) an internal conference has been held to review any rejection of any claim.

4. Time for Reply:
   An Office action other than a Notice of Allowance or a final Office action will set a shortened statutory period of one month or thirty days, whichever is longer, for reply with no extension of time available under 37 CFR 1.136(a). Failure to timely file a reply within this non-extendible period for reply will result in the abandonment of the application.

5. Reply by Applicant:
   A timely reply to an Office action other than the Notice of Allowance must be submitted electronically via EFS or EFS-web and limited to addressing the rejections, objections and requirement made. Any amendment that attempts to: 1) add claims which would result in more than three pending independent claims or more than twenty pending total claims; 2) present claims not encompassed by the pre-examination search or an updated accelerated examination support document; or 3) present claims that are directed a non-elected invention or an invention other than that previously claimed and examined in the application, will be treated as not fully responsive and will not be entered.

   For any amendment to the claims (including any new claim) that is not encompassed by the accelerated examination support document, applicant must provide an updated

accelerated examination support document that encompasses the amended or new claims at the time of filing of the amendment.

To proceed expeditiously with the examination, it is recommended that a reply with amendments made to any claim or with any new claim being added be accompanied by an updated accelerated examination support document or a statement explaining how the amended or new claim is supported by the original accelerated examination support document.

6. Information Disclosure Statement (IDS):
   Any IDS filed during prosecution must be submitted electronically via EFS or EFS-web, accompanied by an updated accelerated examination support document, and be in compliance with 37 CFR 1.97 and 1.98.

7. Post-Allowance Processing:
   To expedite processing of the allowed application into a patent, the applicant must: 1) pay the required fees within one month of the date of the Notice of Allowance, and 2) not file any post allowance papers not required by the Office. In no event may the issue fee be paid and accepted later than three months from the date of the Notice of Allowance.

8. After-Final and Appeal Procedures:
   To expedite prosecution, after receiving the final Office action, applicant must: 1) promptly file a notice of appeal, an appeal brief and appeal fees; and 2) not request a pre-appeal brief conference.

   Any amendment, affidavit or other evidence filed after final Office action must comply with applicable rules and the requirements outlined in numbered paragraphs 5 and 6 above.

   On appeal, the application will proceed according to normal appeal procedures. After appeal, the application will again be treated special.

9. Proceedings Outside the Normal Examination Process:
   If the application becomes involved in a proceeding that is outside the normal examination process (e.g., a secrecy order, national security review, interference proceeding, petitions under 37 CFR 1.181, 182 or 183), the application will be treated special before and after such proceeding.

10. Final Disposition:
    The twelve month goal of this accelerated examination procedure ends with a final disposition. The mailing of a final Office action, a Notice of Allowance, the filing of a Notice of Appeal, or the filing of a Request for Continued Examination (RCE) is the final disposition.

If, during prosecution, a paper is not filed electronically using EFS-web, a reply is filed but is not fully responsive, the application is involved in an appeal, or a proceeding outside normal examination process, the application will still be examined expeditiously, however, the final disposition may occur more than twelve months from the filing of the application.

Any inquiry concerning this decision should be directed to the undersigned whose telephone number is (571) 272-3613.

/Vincent N. Trans
Vincent N. Trans, SPRE/QAS
Technology Center 2100
Computer Architecture, Software, and
Information Security

UNITED STATES PATENT AND TRADEMARK OFFICE

UNITED STATES DEPARTMENT OF COMMERCE
United States Patent and Trademark Office
Address: COMMISSIONER FOR PATENTS
P.O. Box 1450
Alexandria, Virginia 22313-1450
www.uspto.gov

APPLICATION NO.	FILING DATE	FIRST NAMED INVENTOR	ATTORNEY DOCKET NO.	CONFIRMATION NO.
12/059,638	03/31/2008	Oliyer Then	05456.105083(DE920080026U	5282

78148 7590 07/28/2008
KING & SPALDING
1180 PEACHTREE ST.
ATLANTA, GA 30309

EXAMINER
CALDWELL, ANDREW T

ART UNIT	PAPER NUMBER
2142	

MAIL DATE	DELIVERY MODE
07/28/2008	PAPER

Please find below and/or attached an Office communication concerning this application or proceeding.

The time period for reply, if any, is set in the attached communication.

UNITED STATES PATENT AND TRADEMARK OFFICE

Commissioner for Patents
United States Patent and Trademark Office
P.O. Box 1450
Alexandria, VA 22313-1450
www.uspto.gov

KING & SPALDING
1180 PEACHTREE ST.
ATLANTA GA 30309

In re Application of: Oliyer Then et al. Serial No.: 12/059,638 Filed: March 31, 2008 Docket: 05456.105083(DE920080026US1) Title: AUTOMATIC CHANGE DETECTION AND NOTIFICATION SYSTEM AND METHOD	DECISION ON PETITION TO MAKE SPECIAL FOR NEW APPLICATION UNDER 37 C.F.R. § 1.102 & M.P.E.P. § 708.02

This is a decision on the petition filed on March 31, 2008 to make the above-identified application special for accelerated examination procedure under 37 C.F.R. § 1.102(d).

The petition to make the application special is **DENIED**.

REGULATION AND PRACTICE

To be eligible for accelerated examination under 37 C.F.R. § 1.102(d) and pursuant to the "Change to Practice for Petitions in Patent Applications to Make Special and for Accelerated Examination" published in the Federal Register on June 26, 2006 (71 Fed. Reg. 36323), the following conditions must be satisfied:

1. The application must be a non-reissue utility or design application filed under 37 CFR 1.111(a);
2. The application, the petition and the required fees must be filed electronically using the USPTO's electronic filing system (EFS), or EFS-web; if not filed electronically, a statement asserting that EFS and EFS-web were not available during the normal business hours;
3. The application, at the time of filing, must be complete under 37 CFR 1.51 and in condition for examination;
4. The application must contain three or fewer independent claims and twenty or fewer total claims and the claims must be directed to a single invention;
5. The petition must be filed with the application.

The application as filed is not eligible for the accelerated examination under 37 C.F.R. § 1.102(d) because it is a utility application filed under 37 CFR 1.111(a) and was not complete under 37 CFR 1.51 and in condition for examination at the time of filing. The mailing of the

Notice to File Corrected Application Papers on April 4, 2008 is evidence that the application was not complete and in condition for examination at the time of filing.

For the above-stated reasons, the petition is denied. The application will therefore be taken up by the examiner for action in its regular turn.

Any inquiry regarding this decision should be directed to the undersigned at (571) 272-3719. If attempts to reach the undersigned are unsuccessful, Mano Padmanabhan., Quality Assurance Specialist can be reached at (571)272-4210.

/Kakali Chaki/

Kakali Chaki, Quality Assurance Specialist

Technology Center 2100

UNITED STATES PATENT AND TRADEMARK OFFICE

UNITED STATES DEPARTMENT OF COMMERCE
United States Patent and Trademark Office
Address: COMMISSIONER FOR PATENTS
P.O. Box 1450
Alexandria, Virginia 22313-1450
www.uspto.gov

APPLICATION NO.	FILING DATE	FIRST NAMED INVENTOR	ATTORNEY DOCKET NO.	CONFIRMATION NO.
12/059,654	03/31/2008	WALTER HAENEL	DE920070057US1	5311

78571 7590 07/28/2008
Dillon & Yudell LLP
8911 N. Capital of Texas Hwy
Suite 2110
Austin, TX 78759

EXAMINER

ART UNIT	PAPER NUMBER
2192	

MAIL DATE	DELIVERY MODE
07/28/2008	PAPER

Please find below and/or attached an Office communication concerning this application or proceeding.

The time period for reply, if any, is set in the attached communication.

UNITED STATES PATENT AND TRADEMARK OFFICE

Commissioner for Patents
United States Patent and Trademark Office
P.O. Box 1450
Alexandria, VA 22313-1450
www.uspto.gov

Dillon & Yudell LLP
8911 N. Capital of Texas Hwy
Suite 2110
Austin TX 78759

In re Application of: Walter Haenel et al. Serial No.: 12/059,654 Filed: March 31, 2008 Docket: DE920070057US1 Title: INSTANTIATING A COMPOSITE APPLICATION FOR DIFFERENT TARGET PLATFORMS	DECISION ON PETITION TO MAKE SPECIAL FOR NEW APPLICATION UNDER 37 C.F.R. § 1.102 & M.P.E.P. § 708.02

This is a decision on the petition filed on March 31, 2008 to make the above-identified application special for accelerated examination procedure under 37 C.F.R. § 1.102(d).

The petition to make the application special is **DENIED**.

REGULATION AND PRACTICE

To be eligible for accelerated examination under 37 C.F.R. § 1.102(d) and pursuant to the "Change to Practice for Petitions in Patent Applications to Make Special and for Accelerated Examination" published in the Federal Register on June 26, 2006 (71 Fed. Reg. 36323), the following conditions must be satisfied:

1. The application must be a non-reissue utility or design application filed under 37 CFR 1.111(a);
2. The application, the petition and the required fees must be filed electronically using the USPTO's electronic filing system (EFS), or EFS-web; if not filed electronically, a statement asserting that EFS and EFS-web were not available during the normal business hours;
3. The application, at the time of filing, must be complete under 37 CFR 1.51 and in condition for examination;
4. The application must contain three or fewer independent claims and twenty or fewer total claims and the claims must be directed to a single invention;
5. The petition must be filed with the application.

The application as filed is not eligible for the accelerated examination under 37 C.F.R. § 1.102(d) because it is a utility application filed under 37 CFR 1.111(a) and was not complete under 37 CFR 1.51 and in condition for examination at the time of filing. The mailing of the Notice to File Corrected Application Papers on April 10, 2008 is evidence that the application was not complete and in condition for examination at the time of filing.

For the above-stated reasons, the petition is denied. The application will therefore be taken up by the examiner for action in its regular turn.

Any inquiry regarding this decision should be directed to the undersigned at (571) 272-3719. If attempts to reach the undersigned are unsuccessful, Mano Padmanabhan., Quality Assurance Specialist can be reached at (571)272-4210.

/Kakali Chaki/

Kakali Chaki, Quality Assurance Specialist

Technology Center 2100

UNITED STATES PATENT AND TRADEMARK OFFICE

UNITED STATES DEPARTMENT OF COMMERCE
United States Patent and Trademark Office
Address: COMMISSIONER FOR PATENTS
P.O. Box 1450
Alexandria, Virginia 22313-1450
www.uspto.gov

APPLICATION NO.	FILING DATE	FIRST NAMED INVENTOR	ATTORNEY DOCKET NO.	CONFIRMATION NO.
12/059,655	03/31/2008	Gianluca Gargaro	FR920080035US1	5313

78148 7590 07/28/2008
KING & SPALDING
1180 PEACHTREE ST.
ATLANTA, GA 30309

EXAMINER
VU, KIM Y

ART UNIT	PAPER NUMBER
2135	

MAIL DATE	DELIVERY MODE
07/28/2008	PAPER

Please find below and/or attached an Office communication concerning this application or proceeding.

The time period for reply, if any, is set in the attached communication.

UNITED STATES PATENT AND TRADEMARK OFFICE

Commissioner for Patents
United States Patent and Trademark Office
P.O. Box 1450
Alexandria, VA 22313-1450
www.uspto.gov

KING & SPALDING
1180 PEACHTREE ST.
ATLANTA GA 30309

In re Application of: Gianluca Gargaro et al. Serial No.: 12/059,655 Filed: March 31, 2008 Docket: FR920080035US1 Title: METHOD AND SYSTEM FOR AUTHENTICATING USERS WITH A ONE TIME PASSWORD USING AN IMAGE READER	DECISION ON PETITION TO MAKE SPECIAL FOR NEW APPLICATION UNDER 37 C.F.R. § 1.102 & M.P.E.P. § 708.02

This is a decision on the petition filed on March 31, 2008 to make the above-identified application special for accelerated examination procedure under 37 C.F.R. § 1.102(d).

The petition to make the application special is **DENIED**.

REGULATION AND PRACTICE

To be eligible for accelerated examination under 37 C.F.R. § 1.102(d) and pursuant to the "Change to Practice for Petitions in Patent Applications to Make Special and for Accelerated Examination" published in the Federal Register on June 26, 2006 (71 Fed. Reg. 36323), the following conditions must be satisfied:

1. The application must be a non-reissue utility or design application filed under 37 CFR 1.111(a);
2. The application, the petition and the required fees must be filed electronically using the USPTO's electronic filing system (EFS), or EFS-web; if not filed electronically, a statement asserting that EFS and EFS-web were not available during the normal business hours;
3. The application, at the time of filing, must be complete under 37 CFR 1.51 and in condition for examination;
4. The application must contain three or fewer independent claims and twenty or fewer total claims and the claims must be directed to a single invention;
5. The petition must be filed with the application.

The application as filed is not eligible for the accelerated examination under 37 C.F.R. § 1.102(d) because it is a utility application filed under 37 CFR 1.111(a) and was not complete under 37 CFR 1.51 and in condition for examination at the time of filing. The mailing of the Notice to File Corrected Application Papers on April 10, 2008 is evidence that the application was not complete and in condition for examination at the time of filing.

For the above-stated reasons, the petition is denied. The application will therefore be taken up by the examiner for action in its regular turn.

Any inquiry regarding this decision should be directed to the undersigned at (571) 272-3719. If attempts to reach the undersigned are unsuccessful, Mano Padmanabhan., Quality Assurance Specialist can be reached at (571)272-4210.

/Kakali Chaki/

Kakali Chaki, Quality Assurance Specialist

Technology Center 2100

UNITED STATES PATENT AND TRADEMARK OFFICE

Commissioner for Patents
United States Patent and Trademark Office
P.O. Box 1450
Alexandria, VA 22313-1450
www.uspto.gov

AT&T LEGAL DEPARTMENT - WW
PATENT DOCKETING ROOM 2A-207
ONE AT&T WAY
BEDMINSTER NJ 07921

MAILED

APR 20 2009

OFFICE OF PETITIONS

In re Application of
Dewayne A. SENNETT et al.
Application No. 12/059,656
Filed: March 31, 2008
Attorney Docket No. **ATTM-1138/2008-0082**

DECISION ON PETITION

This is a decision on the petition under the unintentional provisions of 37 CFR 1.137(b), filed March 11, 2009, to revive the above-identified application.

The petition is **GRANTED**.

The above-identified application became abandoned for failure to reply in a timely manner to the Notice to File Missing Parts of Nonprovisional Application mailed April 22, 2008. The Notice set a period for reply of two (2) months from the mail date of the Notice. No extensions of time under the provisions of 37 CFR 1.136(a) were obtained. Accordingly, the application became abandoned on June 24, 2008.

The petition satisfies the conditions for revival pursuant to the provisions of 37 CFR 1.137(b) in that (1) the reply in the form of the required replacement drawings; (2) the petition fee of $1,620.00; and (3) the required statement of unintentional delay have been received. Accordingly, the reply to the Notice to File Missing Parts of Nonprovisional Application of April 22, 2008 is accepted as having been unintentionally delayed.

Telephone inquiries concerning this decision should be directed to the undersigned at (571) 272-4231.

The application is being referred to the Office of Patent Application Processing.

Michelle R. Eason
Paralegal Specialist
Office of Petitions

UNITED STATES PATENT AND TRADEMARK OFFICE

UNITED STATES DEPARTMENT OF COMMERCE
United States Patent and Trademark Office
Address: COMMISSIONER FOR PATENTS
P.O. Box 1450
Alexandria, Virginia 22313-1450
www.uspto.gov

APPLICATION NO.	FILING DATE	FIRST NAMED INVENTOR	ATTORNEY DOCKET NO.	CONFIRMATION NO.
12/059,698	03/31/2008	Ian Partridge	GB920080031US1	5383

78571 7590 04/28/2008
Dillon & Yudell LLP
8911 N. Capital of Texas Hwy
Suite 2110
Austin, TX 78759

EXAMINER
EISEN, ALEXANDER

ART UNIT	PAPER NUMBER
2629	

MAIL DATE	DELIVERY MODE
04/28/2008	PAPER

Please find below and/or attached an Office communication concerning this application or proceeding.

The time period for reply, if any, is set in the attached communication.

UNITED STATES PATENT AND TRADEMARK OFFICE

Commissioner for Patents
United States Patent and Trademark Office
P.O. Box 1450
Alexandria, VA 22313-1450
www.uspto.gov

Dillon & Yudell LLP
8911 N. Capital of Texas Hwy
Suite 2110
Austin TX 78759

In re Application of:
Ian PARTRIDGE, et al.
Serial No.: 12/059,698
Filed: March 31, 2008

Title: **GAME CONTROLLER SPATIAL DETECTION**

DECISION ON PETITION TO MAKE SPECIAL FOR NEW APPLICATION UNDER 37 C.F.R. § 1.102 & M.P.E.P. § 708.02

This is a decision on the petition filed on March 31, 2008 requesting that the above-identified application be made special for accelerated examination procedure under 37 C.F.R. § 1.102(d).

The petition to make the application special is **GRANTED**.

The application is eligible for accelerated examination and the petition complies with the conditions for granting the application special status pursuant to the "Change to Practice for Petitions in Patent Applications to Make Special and for Accelerated Examination" published June 26, 2006, in the Federal Register. (71 Fed. Reg. 36323).

The prosecution of the instant application will be conducted expeditiously according to the following guidelines.

1. The application will be docketed to an examiner and taken up for action within two weeks of the date of this decision.

2. Restriction Practice:
   If the examiner determines that the claims are not directed to a single invention, a telephone request to elect one single invention will be made pursuant to MPEP 812.01. As a prerequisite to the grant of this petition, the applicant has agreed to make an oral election, by telephone, without traverse. If the applicant refuses to make an election without traverse, or the examiner cannot reach the applicant after a reasonable effort, the

examiner will treat the first claimed invention (invention defined by claim 1) as having being constructively elected without traverse for examination.

3. Office action:
If it is determined that, after appropriate consultation, there is a potential rejection or any other issue to be addressed, the examiner will telephone the applicant and arrange an interview to discuss and resolve the issue. An Office action, other than a Notice of Allowance and Fee(s) Due (Notice of Allowance), will not be issued unless either: 1) an interview was conducted but did not result in agreed to action that places the application in condition for allowance, or, 2) a determination is made that an interview would be unlikely to result in the application being placed in condition for allowance, and 3) an internal conference has been held to review any rejection of any claim.

4. Time for Reply:
An Office action other than a Notice of Allowance or a final Office action will set a shortened statutory period of one month or thirty days, whichever is longer, for reply with no extension of time available under 37 CFR 1.136(a). Failure to timely file a reply within this non-extendible period for reply will result in the abandonment of the application.

5. Reply by Applicant:
A timely reply to an Office action other than the Notice of Allowance must be submitted electronically via EFS or EFS-web and limited to addressing the rejections, objections and requirement made. Any amendment that attempts to: 1) add claims which would result in more than three pending independent claims or more than twenty pending total claims; 2) present claims not encompassed by the pre-examination search or an updated accelerated examination support document; or 3) present claims that are directed a non-elected invention or an invention other than that previously claimed and examined in the application, will be treated as not fully responsive and will not be entered.

   For any amendment to the claims (including any new claim) that is not encompassed by the accelerated examination support document, applicant must provide an updated accelerated examination support document that encompasses the amended or new claims at the time of filing of the amendment.

   To proceed expeditiously with the examination, it is recommended that a reply with amendments made to any claim or with any new claim being added be accompanied by an updated accelerated examination support document or a statement explaining how the amended or new claim is supported by the original accelerated examination support document.

6. Information Disclosure Statement (IDS): Any IDS filed during prosecution must be submitted electronically via EFS or EFS-web, accompanied by an updated accelerated examination support document, and be in compliance with 37 CFR 1.97 and 1.98.

7. Post-Allowance Processing:

To expedite processing of the allowed application into a patent, the applicant must: 1) pay the required fees within one month of the date of the Notice of Allowance, and 2) not file any post allowance papers not required by the Office. In no event may the issue fee be paid and accepted later than three months from the date of the Notice of Allowance.

8. After-Final and Appeal Procedures:
   To expedite prosecution, after receiving the final Office action, applicant must: 1) promptly file a notice of appeal, an appeal brief and appeal fees; and 2) not request a pre-appeal brief conference.

   Any amendment, affidavit or other evidence filed after final Office action must comply with applicable rules and the requirements outlined in numbered paragraphs 5 and 6 above.

   On appeal, the application will proceed according to normal appeal procedures. After appeal, the application will again be treated special.

9. Proceedings Outside the Normal Examination Process:
   If the application becomes involved in a proceeding that is outside the normal examination process (e.g., a secrecy order, national security review, interference proceeding, petitions under 37 CFR 1.181, 182 or 183), the application will be treated special before and after such proceeding.

10. Final Disposition:
    The twelve month goal of this accelerated examination procedure ends with a final disposition. The mailing of a final Office action, a Notice of Allowance, the filing of a Notice of Appeal, or the filing of a Request for Continued Examination (RCE) is the final disposition.

If, during prosecution, a paper is not filed electronically using EFS-web, a reply is filed but is not fully responsive, the application is involved in an appeal, or a proceeding outside normal examination process, the application will still be examined expeditiously, however, the final disposition may occur more than twelve months from the filing of the application.

Any inquiry regarding this decision should be directed to Krista Zele, Quality Assurance Specialist, at (571) 272-7288.

/Krista Zele/
Krista Zele
Quality Assurance Specialist
Technology Center 2600
Communications

UNITED STATES PATENT AND TRADEMARK OFFICE

UNITED STATES DEPARTMENT OF COMMERCE
United States Patent and Trademark Office
Address: COMMISSIONER FOR PATENTS
P.O. Box 1450
Alexandria, Virginia 22313-1450
www.uspto.gov

APPLICATION NO.	FILING DATE	FIRST NAMED INVENTOR	ATTORNEY DOCKET NO.	CONFIRMATION NO.
12/059,703	03/31/2008	Hans-Werner Anderson	05456.105082(DE920080028U	5391

78148 7590 05/13/2008
KING & SPALDING
1180 PEACHTREE ST.
ATLANTA, GA 30309

EXAMINER

ART UNIT	PAPER NUMBER
2825	

MAIL DATE	DELIVERY MODE
05/13/2008	PAPER

Please find below and/or attached an Office communication concerning this application or proceeding.

The time period for reply, if any, is set in the attached communication.

UNITED STATES PATENT AND TRADEMARK OFFICE

Commissioner for Patents
United States Patent and Trademark Office
P.O. Box 1450
Alexandria, VA 22313-1450
www.uspto.gov

KING & SPALDING
1180 PEACHTREE ST.
ATLANTA GA 30309

In re Application of: ANDERSON, Hans-Werner Serial No.: 12/059,703 Filed: March 31, 2008 Title: System and Method for Automated Analysis and Hierarchical Graphical Presentation of Application Results	: : : : : : :	DECISION ON PETITION TO MAKE SPECIAL FOR NEW APPLICATION UNDER 37 C.F.R. § 1.102 & M.P.E.P. § 708.2

This is a decision on the petition filed on March 31, 2008 to make the above-identified application special for accelerated examination procedure under 37 C.F.R. § 1.102(d).

The petition to make the application special is **DISMISSED**.

REGULATION AND PRACTICE

A grantable petition to make special under 37 C.F.R. § 1.102(d) and pursuant to the "Change to Practice for Petitions in Patent Applications to Make Special and for Accelerated Examination" published in the Federal Register on June 26, 2006 (71 Fed. Reg. 36323), must satisfy the following conditions:

I. Conditions Regarding the Application:

1. the application must be a non-reissue utility or design application filed under 37 CFR 1.111(a);
2. the application, the petition and the required fees must be filed electronically using the USPTO's electronic filing system (EFS), or EFS-web; if not filed electronically, a statement asserting that EFS and EFS-web were not available during the normal business hours.
3. at the time of filing, the application must be complete under 37 CFR 1.51 and in condition for examination;
4. the application must contain three or fewer independent claims and twenty or fewer total claims and the claims must be directed to a single invention.

II. Conditions Regarding the Petition:

The petition must:
1. be filed with the application;

2. include a statement that applicant agrees not to separately argue the patentability of any independent claim during any appeal in the application;

3. include a statement that applicant agrees to make an election without traverse in a telephone interview;

4. include a statement that applicant agrees to conduct such an interview when requested by the examiner; and

5. include a statement, made based on a good faith belief, that a preexamination search in compliance with the following requirements, was conducted, including an identification of the field of search by United States class and subclass, where applicable, and for database searches, the search logic or chemical structure or sequence used as a query, the name of the file(s) searched and the database service, and the date of the search.

The preexamination search must:

5.1 involve U.S. patents and patent application publications, foreign patent documents, and non-patent literature, unless the applicant can justify with reasonable certainty that no references more pertinent than those already identified are likely to be found in the eliminated sources and includes such a justification with this statement;

5.2. be directed to the claimed invention and encompass all of the features of the claims, giving the claims the broadest reasonable expectation; and

5.3. encompass the disclosed features that may be claimed.

6. must provide in support of the petition an accelerated examination support document. An accelerated examination support document must include:

6.1. an information disclosure statement (IDS) in compliance with 37 CFR 1.98 citing each reference deemed most closely related to the subject matter of each of the claims;

6.2. an identification of all the limitations in the claims that are disclosed by the reference specifying where the limitation is disclosed in the cited reference;

6.3. a detailed explanation of how each of the claims are patentable over the references cited with particularity required by 37 CFR 1.111(b) and (c);

6.4. a concise statement of the utility of the invention as defined in each of the independent claims (unless the application is a design application);

6.5. a showing of where each limitation of the claims finds support under 35 USC 112, first paragraph, in the written description of the specification. If applicable, the showing must also identify: (1) each means- (or step) plus-function claim element that invokes consideration under 35 USC 112, sixth paragraph; and (2) the structure, material, or acts in the specification that corresponds to each means- (or step) plus-function claim element that invokes consideration under 35 USC 112, sixth paragraph; if the application claims the benefit of one or more applications under title 35, United States Code, the showing must also include where each limitation of the claims finds support under 35 USC 112, first paragraph, in each such application in which such supports exists; and

6.6. an identification of any cited references that may be disqualified under 35 USC 103(c).

REVIEW OF FACTS

The conditions regarding the application (section I, subsections 1-4) discussed above are considered to have been met. Additionally, the conditions regarding the petition (section II, subsections 1-4) are considered to have been met. However, the petition fails to comply with the all the conditions set forth in section II, subsections 5 and 6. Therefore, the petition fails to meet the required conditions to be accorded special status under the accelerated examination procedure.

Regarding the requirements of section II, subsection 5.1 above, it appears the search outlined in the petition omitted critical search areas by not searching in class 716, subclasses 1-18; class 707, subclasses 3, 4 102 and 104.1; class 703, subclasses 14-18 and class 717, subclasses 104-113 and 120 - 140 at a minimum to include circuit design, query processing(i.e., searching), application of database or data structure, circuit simulation of electronic device or electrical system, modeling software program development tool and managing software components. Keyword searching utilizing the following terms: "tag"--mark$4 or indicat$4 or id or identif$8 and 'log file"—(log or history) near 5 (record of file or database or table) would be an appropriate search. Any renewed petition should include the above outlined additional searching.

Regarding the requirements of section II, subsection 6.3 outlined above, petitioner does not specifically point out the particular language of the claims that distinguishes over the references. The petition fails to provide a detailed explanation of how each of the claims are patentable over each of the references with particularity required by 37 CFR 1.111(b) and (c) and not merely state that the references do not disclose the claim limitations. 37 CFR § 1.111 (b) states "[a] general allegation that the claims define a patentable invention without specifically pointing out how the language of the claims patentably distinguishes them from the references does not comply with the requirements of this section." 37 CFR § 1.111 (c) states in part "the applicant or patent owner must clearly point out the patentable novelty which he or she thinks the claims present in view of the state of the art disclosed by the references cited or the objections made." For example, Modi (US Patent Pub. No. 2007/0239799) is described as teaching a method for analyzing and presenting application results. A log file is transformed into a uniform grid which is searchable such that the location of the log file and the information therein maybe extracted. The detailed explanation clearly does not point out the patentable novelty with respect to the limitations of (b), (c) and (d) which he or she thinks the claim present in view of the state of the art. The Office cannot infer or guess what petitioner believes the differences between the claims and the teachings of the prior art to be. For these reasons, the petition does not meet the requirement of subsection 6.3.

Regarding the requirements of section II, subsection 6.5 outlined above, the support document supplied by the petitioner does not specifically show where ***each limitation*** (italics added) of the claims finds support under 35 USC 112, first paragraph in the written description of the specification. The support document simply states support in the disclosure under 35 USC 112, first paragraph, is found at least in Figures 1 and 2 of the application and in paragraphs 12-47 of

the application. It does not specifically mention any claim limitation and specifically where support for each claim imitation can be found.

DECISION

For the above-stated reasons, the petition is **dismissed**. The application will therefore be taken up by the examiner for action in its regular turn.

Petitioner is given a single opportunity to perfect the petition. Any request for reconsideration of this decision must be submitted within 1 (one) month or 30 (thirty) days, whichever is longer, from the date of this decision in order to be considered timely. Any request for reconsideration must address the deficiencies indicated above.

Petition is reminded that, upon granting of the special status of the application on request for reconsideration, the application will be processed expeditiously. However, due to the dismissal of the instant petition, examination may not be completed within twelve months of the filing date of the application.

Any inquiries regarding this decision should be directed to Quality Assurance Specialist Jose' G. Dees at (571) 272-1569.

Jose' G. Dees, Quality Assurance Specialist
Technology Center 2800
Semiconductors, Electrical and Optical
Systems and Components

UNITED STATES PATENT AND TRADEMARK OFFICE

UNITED STATES DEPARTMENT OF COMMERCE
United States Patent and Trademark Office
Address: COMMISSIONER FOR PATENTS
P.O. Box 1450
Alexandria, Virginia 22313-1450
www.uspto.gov

APPLICATION NO.	FILING DATE	FIRST NAMED INVENTOR	ATTORNEY DOCKET NO.	CONFIRMATION NO.
12/059,703	03/31/2008	Hans-Werner Anderson	DE920080028US1 (105082)	5391

78148 7590 09/08/2008
KING & SPALDING
1180 PEACHTREE ST.
ATLANTA, GA 30309

EXAMINER

ART UNIT	PAPER NUMBER
2825	

MAIL DATE	DELIVERY MODE
09/08/2008	PAPER

Please find below and/or attached an Office communication concerning this application or proceeding.

The time period for reply, if any, is set in the attached communication.

UNITED STATES PATENT AND TRADEMARK OFFICE

Commissioner for Patents
United States Patent and Trademark Office
P.O. Box 1450
Alexandria, VA 22313-1450
www.uspto.gov

KING & SPALDING
1180 PEACHTREE ST.
ATLANTA GA 30309

In re Application of:
ANDERSON, Hans-Werner
Serial No.: 12/059,703
Filed: March 31, 2008
Title: System and Method for Automated Analysis and Hierarchical Graphical Presentation of Application Results

DECISION ON PETITION TO MAKE SPECIAL FOR NEW APPLICATION UNDER 37 C.F.R. § 1.102 & M.P.E.P. § 708.02

This is a decision on the request for reconsideration of the petition to make the above-identified application special for accelerated examination procedure under 37 C.F.R. § 1.102(d) filed June 13, 2008. The petition to make special under 37 C.F.R. § 1.102(d) was dismissed on May 13, 2008.

The petition to make the application special is GRANTED.

The application is eligible for accelerated examination and the petition complies with the conditions for granting the application special status pursuant to the "Change to Practice for Petitions in Patent Applications to Make Special and for Accelerated Examination" published June 26, 2006, in the Federal Register. (71 Fed. Reg. 36323).

The prosecution of the instant application will be conducted expeditiously according to the following guidelines.

1. The application will be docketed to an examiner and taken up for action within two weeks of the date of this decision.

2. Restriction Practice:
   If the examiner determines that the claims are not directed to a single invention, a telephone request to elect one single invention will be made pursuant to MPEP 812.01. As a prerequisite to the grant of this petition, the applicant has agreed to make an oral election, by telephone, without traverse. If the applicant refuses to make an election without traverse, or the examiner cannot reach the applicant after a reasonable effort, the examiner will treat the first claimed invention (invention defined by claim 1) as having being constructively elected without traverse for examination.

3. Office action:
   If it is determined that, after appropriate consultation, there is a potential rejection or any other issue to be addressed, the examiner will telephone the applicant and arrange an interview to discuss and resolve the issue. An Office action, other than a Notice of Allowance and Fee(s) Due (Notice of Allowance), will not be issued unless either: 1) an interview was conducted but did not result in agreed to action that places the application in condition for allowance, or, 2) a determination is made that an interview would be unlikely to result in the application being placed in condition for allowance, and 3) an internal conference has been held to review any rejection of any claim.

4. Time for Reply:
   An Office action other than a Notice of Allowance or a final Office action will set a shortened statutory period of one month or thirty days, whichever is longer, for reply with no extension of time available under 37 CFR 1.136(a). Failure to timely file a reply within this non-extendible period for reply will result in the abandonment of the application.

5. Reply by Applicant:
   A timely reply to an Office action other than the Notice of Allowance must be submitted electronically via EFS or EFS-web and limited to addressing the rejections, objections and requirement made. Any amendment that attempts to: 1) add claims which would result in more than three pending independent claims or more than twenty pending total claims; 2) present claims not encompassed by the pre-examination search or an updated accelerated examination support document; or 3) present claims that are directed a non-elected invention or an invention other than that previously claimed and examined in the application, will be treated as not fully responsive and will not be entered.

   For any amendment to the claims (including any new claim) that is not encompassed by the accelerated examination support document, applicant must provide an updated accelerated examination support document that encompasses the amended or new claims at the time of filing of the amendment.

   To proceed expeditiously with the examination, it is recommended that a reply with amendments made to any claim or with any new claim being added be accompanied by an updated accelerated examination support document or a statement explaining how the amended or new claim is supported by the original accelerated examination support document.

6. Information Disclosure Statement (IDS):
   Any IDS filed during prosecution must be submitted electronically via EFS or EFS-web, accompanied by an updated accelerated examination support document, and be in compliance with 37 CFR 1.97 and 1.98.

7. Post-Allowance Processing:
   To expedite processing of the allowed application into a patent, the applicant must: 1) pay the required fees within one month of the date of the Notice of Allowance, and 2) not file any post allowance papers not required by the Office. In no event may the issue fee be paid and accepted later than three months from the date of the Notice of Allowance.

8. After-Final and Appeal Procedures:
   To expedite prosecution, after receiving the final Office action, applicant must: 1) promptly file a notice of appeal, an appeal brief and appeal fees; and 2) not request a pre-appeal brief conference.

   Any amendment, affidavit or other evidence filed after final Office action must comply with applicable rules and the requirements outlined in numbered paragraphs 5 and 6 above.

   On appeal, the application will proceed according to normal appeal procedures. After appeal, the application will again be treated special.

9. Proceedings Outside the Normal Examination Process:
   If the application becomes involved in a proceeding that is outside the normal examination process (e.g., a secrecy order, national security review, interference proceeding, petitions under 37 CFR 1.181, 182 or 183), the application will be treated special before and after such proceeding.

10. Final Disposition:
    The twelve month goal of this accelerated examination procedure ends with a final disposition. The mailing of a final Office action, a Notice of Allowance, the filing of a Notice of Appeal, or the filing of a Request for Continued Examination (RCE) is the final disposition.

If, during prosecution, a paper is not filed electronically using EFS-web, a reply is filed but is not fully responsive, the application is involved in an appeal, or a proceeding outside normal examination process, the application will still be examined expeditiously, however, the final disposition may occur more than twelve months from the filing of the application.

Any inquiry regarding this decision should be directed to Quality Assurance Specialist Jose' G. Dees at (571) 272-1569.

Jose' G. Dees, Quality Assurance Specialist
Technology Center 2800
Semiconductors, Electrical and Optical
Systems and Components

UNITED STATES PATENT AND TRADEMARK OFFICE

Commissioner for Patents
United States Patent and Trademark Office
P.O. Box 1450
Alexandria, VA 22313-1450
www.uspto.gov

MAIL

APR 22 2008
DIRECTOR'S OFFICE
TECHNOLOGY CENTER 2600

KEUSEY, TUTUNJIAN & BITETTO, P.C.
20 CROSSWAYS PARK NORTH, SUITE 210
WOODBURY NY 11797

In re Application of:
ALEWINE, NEAL, et al.
Serial No.: 12/059,713
Filed: March 31, 2008

Title: **SYSTEMS AND METHODS FOR BUILDING A NATIVE LANGUAGE PHONEME LEXICON HAVING NATIVE PRONUNCIATIONS OF NON-NATIVE WORDS DERIVED FROM NON-NATIVE PRONUNCIATIONS**

DECISION ON PETITION TO MAKE SPECIAL FOR NEW APPLICATION UNDER 37 C.F.R. § 1.102 & M.P.E.P. § 708.02

This is a decision on the petition filed on March 31, 2008 to make the above-identified application special for accelerated examination procedure under 37 C.F.R. § 1.102(d).

The petition to make the application special is **DISMISSED**.

REGULATION AND PRACTICE

A grantable petition to make special under 37 C.F.R. § 1.102(d) and pursuant to the "Change to Practice for Petitions in Patent Applications to Make Special and for Accelerated Examination" published in the Federal Register on June 26, 2006 (71 Fed. Reg. 36323), must satisfy the following conditions:

I. Conditions Regarding the Application:

1. the application must be a non-reissue utility or design application filed under 37 CFR 1.111(a);

2. the application, the petition and the required fees must be filed electronically using the USPTO's electronic filing system (EFS), or EFS-web; if not filed electronically, a statement asserting that EFS and EFS-web were not available during the normal business hours.

3. at the time of filing, the application must be complete under 37 CFR 1.51 and in condition for examination;

4. the application must contain three or fewer independent claims and twenty or fewer total claims and the claims must be directed to a single invention.

II. Conditions Regarding the Petition:

The petition must:

1. be filed with the application;

2. include a statement that applicant agrees not to separately argue the patentability of any independent claim during any appeal in the application;

3. include a statement that applicant agrees to make an election without traverse in a telephone interview.

4. include a statement that applicant agrees to conduct such an interview when requested by the examiner.

5. include a statement, made based on a good faith belief, that a preexamination search in compliance with the following requirements, was conducted, including an identification of the filed of search by United States class and subclass, where applicable, and for database searches, the search logic or chemical structure or sequence used as a query, the name of the file(s) searched and the database service, and the date of the search.

The preexamination search must:

5.1 involve U.S. patents and patent application publications, foreign patent documents, and non-patent literature, unless the applicant can justify with reasonable certainty that no references more pertinent than those already identified are likely to be found in the eliminated sources and includes such a justification with this statement;

5.2. be directed to the claimed invention and encompass all of the features of the claims, giving the claims the broadest reasonable interpretation;

5.3. encompass the disclosed features that may be claimed.

6. must provide in support of the petition an accelerated examination support document. An accelerated examination support document must include:

6.1. an information disclosure statement (IDS) in compliance with 37 CFR 1.98 citing each reference deemed most closely related to the subject matter of each of the claims;

6.2. an identification of all the limitations in the claims that are disclosed by the reference specifying where the limitation is disclosed in the cited reference;

6.3. a detailed explanation of how each of the claims are patentable over the references cited with particularity required by 37 CFR 1.111(b) and (c);

6.4. a concise statement of the utility of the invention as defined in each of the independent claims (unless the application is a design application);

6.5. a showing of where each limitation of the claims finds support under 35 USC 112, first paragraph, in the written description of the specification. If applicable, the showing must also identify: (1) each means- (or step) plus-function claim element that invokes consideration under 35 USC 112, sixth paragraph; and (2) the structure, material, or acts in the specification that corresponds to each means- (or step) plus-function claim element that invokes consideration under 35 USC 112, sixth paragraph; if the application claims the benefit of one or more applications under title 35, United States Code, the showing must also include where each limitation of the claims finds support under 35 USC 112, first paragraph, in each such application in which such supports exists;

6.6. an identification of any cited references that may be disqualified under 35 USC 103(c).

REVIEW OF FACTS

The conditions set forth under section I. above are considered to have been met. However, the petition fails to comply with conditions set forth under section II. items 6 and 6.3.

For these reasons cited above, the petition fails to meet the required conditions to be accorded special status under the accelerated examination procedure.

The Support Document only discusses one reference whereas, the IDS includes additional cited references. All documents included with the IDS in support of a petition for accelerated examination must be discussed in the Support Document as applicable to item 6 above.

Regarding the requirement in item 6.3 above, the Accelerated Examination Support Document is deficient in section 9(C) because applicant has not provided a detailed explanation of how the claim is patentable over ***each*** of the references cited with particularity required by 37 CFR 1.111(b) and (c). Simply repeating the claim and stating that it patentably distinguishes over the reference is not is not with particularity as required by Rule 111.

DECISION

For the above-stated reasons, the petition is **dismissed**. The application will therefore be taken up by the examiner for action in its regular turn.

Petitioner is given a single opportunity to perfect the petition. Any request for reconsideration of this decision must be submitted within 1 (one) month or 30 (thirty) days, whichever is longer, (no extension of time under 37 CFR 1.136(a)) from the date of this decision in order to be considered timely. Any request for reconsideration must address the deficiencies indicated above.

Petitioner is reminded that, upon granting of the special status of the application on request for reconsideration, the application will be processed expeditiously. However, due to the dismissal of the instant petition, examination may not be completed within twelve months of the filing date of the application.

Any inquiry regarding this decision should be directed to Ken Wieder, Quality Assurance Specialist, at (571) 272-2986.

Kenneth A. Wieder
Quality Assurance Specialist
Technology Center 2600

UNITED STATES PATENT AND TRADEMARK OFFICE

Commissioner for Patents
United States Patent and Trademark Office
P.O. Box 1450
Alexandria, VA 22313-1450
www.uspto.gov

MAIL

JUN 2 4 2008

DIRECTOR'S OFFICE
TECHNOLOGY CENTER 2600

KEUSEY, TUTUNJIAN & BITETTO, P.C.
20 CROSSWAYS PARK NORTH, SUITE 210
WOODBURY NY 11797

In re Application of:
ALEWINE, NEAL, et al.
Serial No.: 12/059,713
Filed: March 31, 2008

Title: **SYSTEMS AND METHODS FOR BUILDING A NATIVE LANGUAGE PHONEME LEXICON HAVING NATIVE PRONUNCIATIONS OF NON-NATIVE WORDS DERIVED FROM NON-NATIVE PRONUNCIATIONS**

DECISION ON PETITION TO MAKE SPECIAL FOR NEW APPLICATION UNDER 37 C.F.R. § 1.102 & M.P.E.P. § 708.02

This is a decision on the petition filed on May 22, 2008 requesting reconsideration that the above-identified application be made special for accelerated examination procedure under 37 C.F.R. § 1.102(d).

The petition to make the application special is **GRANTED**.

The application is eligible for accelerated examination and the petition complies with the conditions for granting the application special status pursuant to the "Change to Practice for Petitions in Patent Applications to Make Special and for Accelerated Examination" published June 26, 2006, in the Federal Register. (71 Fed. Reg. 36323).

The prosecution of the instant application will be conducted expeditiously according to the following guidelines.

1. The application will be docketed to an examiner and taken up for action within two weeks of the date of this decision.

2. Restriction Practice:
   If the examiner determines that the claims are not directed to a single invention, a telephone request to elect one single invention will be made pursuant to MPEP 812.01. As a prerequisite to the grant of this petition, the applicant has agreed to make an oral

election, by telephone, without traverse. If the applicant refuses to make an election without traverse, or the examiner cannot reach the applicant after a reasonable effort, the examiner will treat the first claimed invention (invention defined by claim 1) as having being constructively elected without traverse for examination.

3. Office action:
If it is determined that, after appropriate consultation, there is a potential rejection or any other issue to be addressed, the examiner will telephone the applicant and arrange an interview to discuss and resolve the issue. An Office action, other than a Notice of Allowance and Fee(s) Due (Notice of Allowance), will not be issued unless either: 1) an interview was conducted but did not result in agreed to action that places the application in condition for allowance, or, 2) a determination is made that an interview would be unlikely to result in the application being placed in condition for allowance, and 3) an internal conference has been held to review any rejection of any claim.

4. Time for Reply:
An Office action other than a Notice of Allowance or a final Office action will set a shortened statutory period of one month or thirty days, whichever is longer, for reply with no extension of time available under 37 CFR 1.136(a). Failure to timely file a reply within this non-extendible period for reply will result in the abandonment of the application.

5. Reply by Applicant:
A timely reply to an Office action other than the Notice of Allowance must be submitted electronically via EFS or EFS-web and limited to addressing the rejections, objections and requirement made. Any amendment that attempts to: 1) add claims which would result in more than three pending independent claims or more than twenty pending total claims; 2) present claims not encompassed by the pre-examination search or an updated accelerated examination support document; or 3) present claims that are directed a non-elected invention or an invention other than that previously claimed and examined in the application, will be treated as not fully responsive and will not be entered.

   For any amendment to the claims (including any new claim) that is not encompassed by the accelerated examination support document, applicant must provide an updated accelerated examination support document that encompasses the amended or new claims at the time of filing of the amendment.

   To proceed expeditiously with the examination, it is recommended that a reply with amendments made to any claim or with any new claim being added be accompanied by an updated accelerated examination support document or a statement explaining how the amended or new claim is supported by the original accelerated examination support document.

6. Information Disclosure Statement (IDS):

Any IDS filed during prosecution must be submitted electronically via EFS or EFS-web, accompanied by an updated accelerated examination support document, and be in compliance with 37 CFR 1.97 and 1.98.

7. Post-Allowance Processing:
   To expedite processing of the allowed application into a patent, the applicant must: 1) pay the required fees within one month of the date of the Notice of Allowance, and 2) not file any post allowance papers not required by the Office. In no event may the issue fee be paid and accepted later than three months from the date of the Notice of Allowance.

8. After-Final and Appeal Procedures:
   To expedite prosecution, after receiving the final Office action, applicant must: 1) promptly file a notice of appeal, an appeal brief and appeal fees; and 2) not request a pre-appeal brief conference.

   Any amendment, affidavit or other evidence filed after final Office action must comply with applicable rules and the requirements outlined in numbered paragraphs 5 and 6 above.

   On appeal, the application will proceed according to normal appeal procedures. After appeal, the application will again be treated special.

9. Proceedings Outside the Normal Examination Process:
   If the application becomes involved in a proceeding that is outside the normal examination process (e.g., a secrecy order, national security review, interference proceeding, petitions under 37 CFR 1.181, 182 or 183), the application will be treated special before and after such proceeding.

10. Final Disposition:
    The twelve month goal of this accelerated examination procedure ends with a final disposition. The mailing of a final Office action, a Notice of Allowance, the filing of a Notice of Appeal, or the filing of a Request for Continued Examination (RCE) is the final disposition.

If, during prosecution, a paper is not filed electronically using EFS-web, a reply is filed but is not fully responsive, the application is involved in an appeal, or a proceeding outside normal examination process, the application will still be examined expeditiously, however, the final disposition may occur more than twelve months from the filing of the application.
Any inquiry regarding this decision should be directed to Ken Wieder, Quality Assurance Specialist, at (571) 272-2986.

Kenneth A. Wieder
Quality Assurance Specialist
Technology Center 2600
Communications

UNITED STATES PATENT AND TRADEMARK OFFICE

UNITED STATES DEPARTMENT OF COMMERCE
United States Patent and Trademark Office
Address: COMMISSIONER FOR PATENTS
P.O. Box 1450
Alexandria, Virginia 22313-1450
www.uspto.gov

APPLICATION NO.	FILING DATE	FIRST NAMED INVENTOR	ATTORNEY DOCKET NO.	CONFIRMATION NO.
12/059,720	03/31/2008	Anthony H. Phillips	GB920080035US1	5418

78571 7590 12/02/2008
Dillon & Yudell LLP
8911 N. Capital of Texas Hwy
Suite 2110
Austin, TX 78759

EXAMINER
NGUYEN, PHUOC H

ART UNIT	PAPER NUMBER
2443	

MAIL DATE	DELIVERY MODE
12/02/2008	PAPER

Please find below and/or attached an Office communication concerning this application or proceeding.

The time period for reply, if any, is set in the attached communication.

UNITED STATES PATENT AND TRADEMARK OFFICE

Commissioner for Patents
United States Patent and Trademark Office
P.O. Box 1450
Alexandria, VA 22313-1450
www.uspto.gov

MAILED

DEC 01 2008

TECHNOLOGY CENTER 2100

Dillon & Yudell LLP
8911 N. Capital of Texas Hwy
Suite 2110
Austin TX 78759

In re Application of: Anthony H. PHILLIPS
Serial No.: 12/059720
Filed: Mar 31, 2008
Docket: GB920080035US1
Title: TRANSFER OF WEB APPLICATIONS BETWEEN DEVICES

DECISION ON PETITION TO MAKE SPECIAL FOR NEW APPLICATION UNDER 37 C.F.R. § 1.102 & M.P.E.P. § 708.02

This is a decision on the petition filed on Mar 31, 2008 to make the above-identified application special for accelerated examination procedure under 37 C.F.R. § 1.102(d).

The petition to make the application special is **GRANTED**.

The application is eligible for accelerated examination and the petition complies with the conditions for granting the application special status pursuant to the "Change to Practice for Petitions in Patent Applications to Make Special and for Accelerated Examination" published June 26, 2006, in the Federal Register. (71 Fed. Reg. 36323).

The prosecution of the instant application will be conducted expeditiously according to the following guidelines.

1. The application will be docketed to an examiner and taken up for action within two weeks of the date of this decision.

2. Restriction Practice:
   If the examiner determines that the claims are not directed to a single invention, a telephone request to elect one single invention will be made pursuant to MPEP 812.01. As a prerequisite to the grant of this petition, the applicant has agreed to make an oral election, by telephone, without traverse. If the applicant refuses to make an election without traverse, or the examiner cannot reach the applicant after a reasonable effort, the examiner will treat the first claimed invention (invention defined by claim 1) as having being constructively elected without traverse for examination.

3. Office action:

If it is determined that, after appropriate consultation, there is a potential rejection or any other issue to be addressed, the examiner will telephone the applicant and arrange an interview to discuss and resolve the issue. An Office action, other than a Notice of Allowance and Fee(s) Due (Notice of Allowance), will not be issued unless either: 1) an interview was conducted but did not result in agreed to action that places the application in condition for allowance, or, 2) a determination is made that an interview would be unlikely to result in the application being placed in condition for allowance, and 3) an internal conference has been held to review any rejection of any claim.

4. Time for Reply:
An Office action other than a Notice of Allowance or a final Office action will set a shortened statutory period of one month or thirty days, whichever is longer, for reply with no extension of time available under 37 CFR 1.136(a). Failure to timely file a reply within this non-extendible period for reply will result in the abandonment of the application.

5. Reply by Applicant:
A timely reply to an Office action other than the Notice of Allowance must be submitted electronically via EFS or EFS-web and limited to addressing the rejections, objections and requirement made. Any amendment that attempts to: 1) add claims which would result in more than three pending independent claims or more than twenty pending total claims; 2) present claims not encompassed by the pre-examination search or an updated accelerated examination support document; or 3) present claims that are directed a non-elected invention or an invention other than that previously claimed and examined in the application, will be treated as not fully responsive and will not be entered.

   For any amendment to the claims (including any new claim) that is not encompassed by the accelerated examination support document, applicant must provide an updated accelerated examination support document that encompasses the amended or new claims at the time of filing of the amendment.

   To proceed expeditiously with the examination, it is recommended that a reply with amendments made to any claim or with any new claim being added be accompanied by an updated accelerated examination support document or a statement explaining how the amended or new claim is supported by the original accelerated examination support document.

6. Information Disclosure Statement (IDS):
Any IDS filed during prosecution must be submitted electronically via EFS or EFS-web, accompanied by an updated accelerated examination support document, and be in compliance with 37 CFR 1.97 and 1.98.

7. Post-Allowance Processing:
To expedite processing of the allowed application into a patent, the applicant must: 1) pay the required fees within one month of the date of the Notice of Allowance, and 2) not

file any post allowance papers not required by the Office. In no event may the issue fee be paid and accepted later than three months from the date of the Notice of Allowance.

8. After-Final and Appeal Procedures:
   To expedite prosecution, after receiving the final Office action, applicant must: 1) promptly file a notice of appeal, an appeal brief and appeal fees; and 2) not request a pre-appeal brief conference.

   Any amendment, affidavit or other evidence filed after final Office action must comply with applicable rules and the requirements outlined in numbered paragraphs 5 and 6 above.

   On appeal, the application will proceed according to normal appeal procedures. After appeal, the application will again be treated special.

9. Proceedings Outside the Normal Examination Process:
   If the application becomes involved in a proceeding that is outside the normal examination process (e.g., a secrecy order, national security review, interference proceeding, petitions under 37 CFR 1.181, 182 or 183), the application will be treated special before and after such proceeding.

10. Final Disposition:
    The twelve-month goal of this accelerated examination procedure ends with a final disposition. The mailing of a final Office action, a Notice of Allowance, the filing of a Notice of Appeal, or the filing of a Request for Continued Examination (RCE) is the final disposition.

If, during prosecution, a paper is not filed electronically using EFS-web, a reply is filed but is not fully responsive, the application is involved in an appeal, or a proceeding outside normal examination process, the application will still be examined expeditiously, however, the final disposition may occur more than twelve months from the filing of the application. In addition, Applicant is reminded that due to the dismissal of the previous petition submission, examination may not be completed within twelve months of the filing date of the application.

Any inquiry regarding this decision should be directed the undersigned whose telephone number is (571) 272-4147.

If attempts to reach the undersigned by telephone are unsuccessful, Tod Swann, Quality Assurance Specialist, can be reached at (571) 272-3612.

/Kim Huynh/

Kim Huynh, Quality Assurance Specialist
Technology Center 2400
Computer Architecture, Software and Information Security

UNITED STATES PATENT AND TRADEMARK OFFICE

Commissioner for Patents
United States Patent and Trademark Office
P.O. Box 1450
Alexandria, VA 22313-1450
www.uspto.gov

MAIL

MAY 01 2008

DIRECTOR'S OFFICE
TECHNOLOGY CENTER 2600

Dillon & Yudell LLP
8911 N. Capital of Texas Hwy
Suite 2110
Austin TX 78759

In re Application of:
POSTOYKO, JOHN D.
Serial No.: 12/059,740
Filed: March 31, 2008

Title: **PLUGGABLE INPUT DEVICE FOR CHIRAL CUSTOMIZATION OF A MOBILE PHONE**

DECISION ON PETITION TO MAKE SPECIAL FOR NEW APPLICATION UNDER 37 C.F.R. § 1.102 & M.P.E.P. § 708.02

This is a decision on the petition filed on March 31, 2008 to make the above-identified application special for accelerated examination procedure under 37 C.F.R. § 1.102(d).

The petition to make the application special is **DISMISSED**.

REGULATION AND PRACTICE

A grantable petition to make special under 37 C.F.R. § 1.102(d) and pursuant to the "Change to Practice for Petitions in Patent Applications to Make Special and for Accelerated Examination" published in the Federal Register on June 26, 2006 (71 Fed. Reg. 36323), must satisfy the following conditions:

I. Conditions Regarding the Application:

1. the application must be a non-reissue utility or design application filed under 37 CFR 1.111(a);

2. the application, the petition and the required fees must be filed electronically using the USPTO's electronic filing system (EFS), or EFS-web; if not filed electronically, a statement asserting that EFS and EFS-web were not available during the normal business hours.

3. at the time of filing, the application must be complete under 37 CFR 1.51 and in condition for examination;

4. the application must contain three or fewer independent claims and twenty or fewer total claims and the claims must be directed to a single invention.

II. Conditions Regarding the Petition:

The petition must:

1. be filed with the application;

2. include a statement that applicant agrees not to separately argue the patentability of any independent claim during any appeal in the application;

3. include a statement that applicant agrees to make an election without traverse in a telephone interview.

4. include a statement that applicant agrees to conduct such an interview when requested by the examiner.

5. include a statement, made based on a good faith belief, that a preexamination search in compliance with the following requirements, was conducted, including an identification of the filed of search by United States class and subclass, where applicable, and for database searches, the search logic or chemical structure or sequence used as a query, the name of the file(s) searched and the database service, and the date of the search.

The preexamination search must:

5.1 involve U.S. patents and patent application publications, foreign patent documents, and non-patent literature, unless the applicant can justify with reasonable certainty that no references more pertinent than those already identified are likely to be found in the eliminated sources and includes such a justification with this statement;

5.2. be directed to the claimed invention and encompass all of the features of the claims, giving the claims the broadest reasonable interpretation;

5.3. encompass the disclosed features that may be claimed.

6. must provide in support of the petition an accelerated examination support document. An accelerated examination support document must include:

6.1. an information disclosure statement (IDS) in compliance with 37 CFR 1.98 citing each reference deemed most closely related to the subject matter of each of the claims;

6.2. an identification of all the limitations in the claims that are disclosed by the reference specifying where the limitation is disclosed in the cited reference;

6.3. a detailed explanation of how each of the claims are patentable over the references cited with particularity required by 37 CFR 1.111(b) and (c);

6.4. a concise statement of the utility of the invention as defined in each of the independent claims (unless the application is a design application);

6.5. a showing of where each limitation of the claims finds support under 35 USC 112, first paragraph, in the written description of the specification. If applicable, the showing must also identify: (1) each means- (or step) plus-function claim element that invokes consideration under 35 USC 112, sixth paragraph; and (2) the structure, material, or acts in the specification that corresponds to each means- (or step) plus-function claim element that invokes consideration under 35 USC 112, sixth paragraph; if the application claims the benefit of one or more applications under title 35, United States Code, the showing must also include where each limitation of the claims finds support under 35 USC 112, first paragraph, in each such application in which such supports exists;

6.6. an identification of any cited references that may be disqualified under 35 USC 103(c).

REVIEW OF FACTS

The conditions set forth under section I. above are considered to have been met. However, the petition fails to comply with conditions set forth under section II. items 5.2 and 5.3.

For these reasons cited above, the petition fails to meet the required conditions to be accorded special status under the accelerated examination procedure.

Regarding the requirement in item 5.2 and 5.3 above, the preexamination search document provided with the instant petition is deficient as follows: The search was too narrow. Search should have additionally included Class/subclass:

710/14, 73
463/36, 37, 38
345/157,158,160,161,162,164,167
379/433.05,433.11,433.06

The database search was too broad and should also include the search strings:
Ambidext$6 "AND" [any of the above class/subclass combinations]
(Right or left) near4 hand$2 same (option or switch$4 or remove or replace or change$4 or $2configur$5)

If any request for reconsideration is filed, an updated preexamination search must be conducted as per items 5.2 and 5.3 above, and the Preexamination Search Document must be amended to indicate such; a new Information Disclosure Statement should be filed to cite any newly found prior art, and the Accelerated Examination Support Document must also be amended to include the necessary reference and discussion of any newly found and cited prior art in accordance with all of items 6 through 6.6 above.

DECISION

For the above-stated reasons, the petition is **dismissed**. The application will therefore be taken up by the examiner for action in its regular turn.

Petitioner is given a single opportunity to perfect the petition. Any request for reconsideration of this decision must be submitted within 1 (one) month or 30 (thirty) days, whichever is longer, (no extension of time under 37 CFR 1.136(a)) from the date of this decision in order to be considered timely. Any request for reconsideration must address the deficiencies indicated above.

Petitioner is reminded that, upon granting of the special status of the application on request for reconsideration, the application will be processed expeditiously. However, due to the dismissal of the instant petition, examination may not be completed within twelve months of the filing date of the application.

Any inquiry regarding this decision should be directed to Michael Horabik, Quality Assurance Specialist, at (571) 272-3068.

Michael Horabik
Quality Assurance Specialist
Technology Center 2600
Communications

UNITED STATES PATENT AND TRADEMARK OFFICE

Commissioner for Patents
United States Patent and Trademark Office
P.O. Box 1450
Alexandria, VA 22313-1450
www.uspto.gov

LAW OFFICES OF JAMES E. WALTON, PLLC
1169 N. BURLESON BLVD.
SUITE 107-328
BURLESON, TX 76028

COPY MAILED

MAR 0 2 2009

OFFICE OF PETITIONS

In re Application of	:	
BROWN, Garrick	:	
Application No. 12/059,748	:	DECISION ON PETITION
Filed: March 31, 2008	:	TO WITHDRAW
Attorney Docket No. **1142JW-60766-CIP**	:	FROM RECORD

This is a decision on the Request to Withdraw as attorney or agent of record under 37 C.F.R. § 1.36(b), filed January 28, 2009.

The request is **APPROVED**.

A grantable request to withdraw as attorney/agent of record must be signed by every attorney/agent seeking to withdraw or contain a clear indication that one attorney is signing on behalf of another/others. The Office requires the practitioner(s) requesting withdrawal to certify that he, she, or they have: (1) given reasonable notice to the client, prior to the expiration of the response period, that the practitioner(s) intends to withdraw from employment; (2) delivered to the client or a duly authorized representative of the client all papers and property (including funds) to which the client is entitled; and (3) notified the client of any responses that may be due and the time frame within which the client must respond, pursuant 37 CFR 10.40(c).

The request was signed by James Walton on behalf of all attorneys of record who are associated with customer No. 38441. All attorneys/agents associated with the Customer Number 38441 have been withdrawn. Applicant is reminded that there is no attorney of record at this time.

All future correspondence will be directed to the first named inventor Garrick Brown at the address indicated below.

Telephone inquiries concerning this decision should be directed to Tredelle Jackson at 571-272-2783.

Tredelle D. Jackson
Paralegal Specialist
Office of Petitions

cc: **GARRICK BROWN**
1417 HARBOURTOWN CIRCLE
MANSFIELD TX 76063

UNITED STATES PATENT AND TRADEMARK OFFICE

UNITED STATES DEPARTMENT OF COMMERCE
United States Patent and Trademark Office
Address: COMMISSIONER FOR PATENTS
P.O. Box 1450
Alexandria, Virginia 22313-1450
www.uspto.gov

APPLICATION NO.	FILING DATE	FIRST NAMED INVENTOR	ATTORNEY DOCKET NO.	CONFIRMATION NO.
12/059,767	03/31/2008	STEFAN HEPPER	DE920070058US1	5487

78571 7590 07/28/2008
Dillon & Yudell LLP
8911 N. Capital of Texas Hwy
Suite 2110
Austin, TX 78759

EXAMINER

ART UNIT	PAPER NUMBER
2194	

MAIL DATE	DELIVERY MODE
07/28/2008	PAPER

Please find below and/or attached an Office communication concerning this application or proceeding.

The time period for reply, if any, is set in the attached communication.

UNITED STATES PATENT AND TRADEMARK OFFICE

Commissioner for Patents
United States Patent and Trademark Office
P.O. Box 1450
Alexandria, VA 22313-1450
www.uspto.gov

Dillon & Yudell LLP
8911 N. Capital of Texas Hwy
Suite 2110
Austin TX 78759

In re Application of: Stefan Hepper et al. Serial No.: 12/059,767 Filed: March 31, 2008 Docket: DE920070058US1 Title: DYNAMIC TEMPLATE INSTANTIATION	DECISION ON PETITION TO MAKE SPECIAL FOR NEW APPLICATION UNDER 37 C.F.R. § 1.102 & M.P.E.P. § 708.02

This is a decision on the petition filed on March 31, 2008 to make the above-identified application special for accelerated examination procedure under 37 C.F.R. § 1.102(d).

The petition to make the application special is **DENIED**.

REGULATION AND PRACTICE

To be eligible for accelerated examination under 37 C.F.R. § 1.102(d) and pursuant to the "Change to Practice for Petitions in Patent Applications to Make Special and for Accelerated Examination" published in the Federal Register on June 26, 2006 (71 Fed. Reg. 36323), the following conditions must be satisfied:

1. The application must be a non-reissue utility or design application filed under 37 CFR 1.111(a);
2. The application, the petition and the required fees must be filed electronically using the USPTO's electronic filing system (EFS), or EFS-web; if not filed electronically, a statement asserting that EFS and EFS-web were not available during the normal business hours;
3. The application, at the time of filing, must be complete under 37 CFR 1.51 and in condition for examination;
4. The application must contain three or fewer independent claims and twenty or fewer total claims and the claims must be directed to a single invention;
5. The petition must be filed with the application.

The application as filed is not eligible for the accelerated examination under 37 C.F.R. § 1.102(d) because it is a utility application filed under 37 CFR 1.111(a) and was not complete

under 37 CFR 1.51 and in condition for examination at the time of filing. The mailing of the Notice to File Corrected Application Papers on April 04, 2008 is evidence that the application was not complete and in condition for examination at the time of filing.

For the above-stated reasons, the petition is denied. The application will therefore be taken up by the examiner for action in its regular turn.

Any inquiry regarding this decision should be directed to the undersigned at (571) 272-3719. If attempts to reach the undersigned are unsuccessful, Mano Padmanabhan., Quality Assurance Specialist can be reached at (571)272-4210.

/Kakali Chaki/

Kakali Chaki, Quality Assurance Specialist

Technology Center 2100

UNITED STATES PATENT AND TRADEMARK OFFICE

UNITED STATES DEPARTMENT OF COMMERCE
United States Patent and Trademark Office
Address: COMMISSIONER FOR PATENTS
P.O. Box 1450
Alexandria, Virginia 22313-1450
www.uspto.gov

APPLICATION NO.	FILING DATE	FIRST NAMED INVENTOR	ATTORNEY DOCKET NO.	CONFIRMATION NO.
12/059,772	03/31/2008	Nils Haustein	DE920080025US1	5492

48150 7590 07/28/2008
MCGINN INTELLECTUAL PROPERTY LAW GROUP, PLLC
8321 OLD COURTHOUSE ROAD
SUITE 200
VIENNA, VA 22182-3817

EXAMINER
BARRON JR, GILBERTO

ART UNIT	PAPER NUMBER
2132	

MAIL DATE	DELIVERY MODE
07/28/2008	PAPER

Please find below and/or attached an Office communication concerning this application or proceeding.

The time period for reply, if any, is set in the attached communication.

UNITED STATES PATENT AND TRADEMARK OFFICE

Commissioner for Patents
United States Patent and Trademark Office
P.O. Box 1450
Alexandria, VA 22313-1450
www.uspto.gov

MCGINN INTELLECTUAL PROPERTY LAW GROUP, PLLC
8321 OLD COURTHOUSE ROAD
SUITE 200
VIENNA VA 22182-3817

In re Application of: Nils Haustein et al. Serial No.: 12/059,772 Filed: March 31, 2008 Docket: DE920080025US1 Title: SYSTEM AND METHOD FOR ADJUSTING THE SECURITY LEVEL OF A REMOVABLE MEDIUM	DECISION ON PETITION TO MAKE SPECIAL FOR NEW APPLICATION UNDER 37 C.F.R. § 1.102 & M.P.E.P. § 708.02

This is a decision on the petition filed on March 31, 2008 to make the above-identified application special for accelerated examination procedure under 37 C.F.R. § 1.102(d).

The petition to make the application special is **DENIED**.

REGULATION AND PRACTICE

To be eligible for accelerated examination under 37 C.F.R. § 1.102(d) and pursuant to the "Change to Practice for Petitions in Patent Applications to Make Special and for Accelerated Examination" published in the Federal Register on June 26, 2006 (71 Fed. Reg. 36323), the following conditions must be satisfied:

1. The application must be a non-reissue utility or design application filed under 37 CFR 1.111(a);
2. The application, the petition and the required fees must be filed electronically using the USPTO's electronic filing system (EFS), or EFS-web; if not filed electronically, a statement asserting that EFS and EFS-web were not available during the normal business hours;
3. The application, at the time of filing, must be complete under 37 CFR 1.51 and in condition for examination;
4. The application must contain three or fewer independent claims and twenty or fewer total claims and the claims must be directed to a single invention;
5. The petition must be filed with the application.

The application as filed is not eligible for the accelerated examination under 37 C.F.R. § 1.102(d) because it is a utility application filed under 37 CFR 1.111(a) and was not complete

under 37 CFR 1.51 and in condition for examination at the time of filing. The mailing of the Notice to File Corrected Application Papers on April 7, 2008 is evidence that the application was not complete and in condition for examination at the time of filing.

For the above-stated reasons, the petition is denied. The application will therefore be taken up by the examiner for action in its regular turn.

Any inquiry regarding this decision should be directed to the undersigned at (571) 272-3719. If attempts to reach the undersigned are unsuccessful, Mano Padmanabhan., Quality Assurance Specialist can be reached at (571)272-4210.

/Kakali Chaki/

Kakali Chaki, Quality Assurance Specialist

Technology Center 2100

UNITED STATES PATENT AND TRADEMARK OFFICE

UNITED STATES DEPARTMENT OF COMMERCE
United States Patent and Trademark Office
Address: COMMISSIONER FOR PATENTS
P.O. Box 1450
Alexandria, Virginia 22313-1450
www.uspto.gov

APPLICATION NO.	FILING DATE	FIRST NAMED INVENTOR	ATTORNEY DOCKET NO.	CONFIRMATION NO.
12/059,772	03/31/2008	Nils Haustein	DE920080025US1	5492

48150 7590 11/26/2008
MCGINN INTELLECTUAL PROPERTY LAW GROUP, PLLC
8321 OLD COURTHOUSE ROAD
SUITE 200
VIENNA, VA 22182-3817

EXAMINER
BARRON JR, GILBERTO

ART UNIT	PAPER NUMBER
2432	

MAIL DATE	DELIVERY MODE
11/26/2008	PAPER

Please find below and/or attached an Office communication concerning this application or proceeding.

The time period for reply, if any, is set in the attached communication.

UNITED STATES PATENT AND TRADEMARK OFFICE

UNDER SECRETARY OF COMMERCE FOR INTELLECTUAL PROPERTY AND
DIRECTOR OF THE UNITED STATES PATENT AND TRADEMARK OFFICE
WASHINGTON, DC 20231
www.uspto.gov

MCGINN INTELLECTUAL PROPERTY LAW GROUP, PLLC
8321 OLD COURTHOUSE ROAD
SUITE 200
VIENNA VA 22182-3817

Applicant: Nils Haustein	:	
Application No. 12/059,772	:	**Decision On Petition to Make**
Filed: March 31, 2008	:	**Special under 37 C.F.R. § 1.102 (d)**
For: SYSTEM AND METHOD FOR	:	**and M.P.E.P. § 708.02(a)**
ADJUSTING THE SECURITY LEVEL	:	
OF A REMOVABLE MEDIUM	:	

This is a decision in response to the submission received on August 28, 2008 requesting review of the decision mailed July 28, 2008, denying accelerated examination status for the instant application. The signatory of the July 28, 2008 decision denying accelerated examination status possessed delegated authority to act on behalf of the Technology Center Director in such matters. Therefore, the petition received on August 28, 2008 is a request for review of a decision of a Technology Center Director. Accordingly, the Office of the Deputy Commissioner for Patent Examination Policy has decision-making authority over Applicant's petition. M.P.E.P. § 1002.02(b)(15).

The petition to reconsider the denial of accelerated examination status for application No. 12/059,772 and to grant such status under 37 CFR 1.102 is **DENIED**.

Background

The above-identified application was filed under 35 U.S.C. § 111(a) on March 31, 2008 accompanied by a petition under 37 CFR 1.102(d) to make the application special under the accelerated examination program. See 71 Fed. Reg. 36,323. The application included a single claim, but the claim did not commence on a separate sheet as required in 37 CFR 1.75(h).

On April 7, 2008, the United States Patent and Trademark Office (USPTO) issued a Notice to File Corrected Application Papers. The Notice required Applicant to submit replacement claims in compliance with 37 CFR 1.75(h).

On April 9 2008, Applicant responded to the notice of missing parts by submitting a substitute specification and a claim commencing on a separate sheet of paper.

On July 18, 2008, a decision was mailed by the USPTO denying Applicant's petition to make special. The decision outlined the requirements for accelerated examination pursuant to the "Change to Practice for Petitions in Patent Applications to Make Special and for Accelerated Examination" (71 Fed Reg. 36323), and cited the existence of an accurate and properly issued "Notice to File Corrected Application Papers" and a failure to present claims commencing on a separate sheet of paper as the justification for denying special examination status to the application.

On August 28, 2008, Applicant submitted the instant Petition requesting reconsideration of the July 28, 2008 denial of the petition to make special.

Applicable Regulations and Notice Sections

37 CFR § 1.102 Advancement of Examination

> (a) Applications will not be advanced out of turn for examination or for further action except as provided by this part, or upon order of the Director to expedite the business of the Office, or upon filing of a request under paragraph (b) of this section or upon filing a petition under paragraphs (c) or (d) of this section with a showing which, in the opinion of the Director, will justify so advancing it.

Change to Practice for Petitions in Patent Applications to Make Special and for Accelerated Examination", 71 Fed. Reg. 36,323 (Jun. 26, 2006)

The relevant portions of the Accelerated Examination Notice are as follows:

> Part I. Requirements for Petitions to Make Special under Accelerated Examination: *A new application may be granted accelerated examination status under the following conditions:*
>
> ...
>
> (4) The application, at the time of filing, must be complete under 37 CFR 1.51 and in condition for examination.
>
> ...
>
> *Part VIII: More Information:*
>
> ...
>
> *Conditions for Examination:* The application must be in condition for examination at the time of filing. This means the application must include the following:

...

- The petition to make special will be dismissed if the application omits an item or includes a paper that causes the Office of Initial Patent Examination (OIPE) to mail a notice during the formality review (e.g. a notice of incomplete application, a notice to file missing parts, a notice to file corrected application papers, notice of omitted items, or notice of informal application). ***The opportunity to perfect a petition (Part II) <u>does not apply</u> to applications that are not in condition for examination of filing.*** (71 Fed. Reg. 36,323 at 36,327)

Decision

Petitioner does not dispute that the single claim filed with the application on March 31, 2008 was not in compliance with 37 CFR 1.75(h). Petitioner requests reconsideration based upon petitioner's assertion that Applicant, in accordance with USPTO request, has complied with the requirements made in the Notice mailed April 7, 2008 by filing a claim now commencing on a separate sheet. Applicant further asserts that the features of the single claim remain unchanged. Applicant requests reconsideration of the USPTO denial to have the current application prosecuted as special accelerated examination.

Under this program, the application must be, "*at the time of filing*" complete under 37 CFR 1.51 and in "*condition for examination*". These requirements include submission of claims in compliance with 37 CFR 1.75(h). As the goal of this program is to advance prosecution of an application to final disposition, as defined by the Office, within 12 months from the date of filing, all applications must meet the requirements of the policy in order to meet the reduced examination time goals. The existence of a "Notice to File Corrected Application Papers" was the evidentiary basis for concluding the application was not in condition for examination. The issuance of the "Notice to File Corrected Application Papers" was proper. Petitioner has responded and corrected the errors. Therefore, Petitioner implicitly acknowledged that the application was not in condition for examination at the time of filing.

CONCLUSION

For the above-stated reasons, the petition to reconsider a denial to make special application No. 12/059,772 is **DENIED**. Therefore, the USPTO will examine the above-identified application in accordance with standard examination procedures.

This decision may be viewed as final agency action. <u>See</u> MPEP 1002.02.

Further correspondence with respect to this matter should be addressed as follows:

By mail: Mail Stop
Commissioner for Patents
Post Office Box 1450
Alexandria, VA 22313-1450

Telephone inquiries related to this decision should be directed to Pinchus M. Laufer, Legal Advisor at (571) 272-7726.

Robert A. Clarke, Director
Office of Patent Legal Administration
Office of the Deputy Commissioner for Patent Examination Policy

UNITED STATES PATENT AND TRADEMARK OFFICE

Commissioner for Patents
United States Patent and Trademark Office
P.O. Box 1450
Alexandria, VA 22313-1450
www.uspto.gov

SLATER & MATSIL, L.L.P.
17950 PRESTON ROAD
SUITE 1000
DALLAS, TX 75252

MAILED

JUL 22 2010

OFFICE OF PETITIONS

In re Application of	:	
Scheppler et al.	:	DECISION ON PETITION
Application No. 12/059,796	:	TO WITHDRAW
Filed: March 31, 2008	:	FROM RECORD
Attorney Docket No. QIM 2007 P 52100 US	:	

This is a decision on the Request to Withdraw as attorney or agent of record under 37 C.F.R. § 1.36(b), filed June 17, 2010.

The request is **NOT APPROVED**.

The Office strongly encourages practitioner(s) requesting withdrawal from representation as practitioner of record in an application to review the record to determine whether he or she is, in fact, of record and how he or she was made of record. For example, the practitioner(s) should determine whether he or she was appointed by naming each practitioner individually or through the use of a Customer Number.

In the instant application, the practitioner(s) were appointed via Customer Number however the request does not designate a Customer Number to be withdrawn by. Therefore, the current request cannot be approved at this time. Any subsequent request must withdraw all associated practitioner(s) in the same manner as appointed.

Further, the Office will only accept correspondence address changes to the most current address information provided for the assignee of the entire interest *who properly became of record under 37 CFR 3.71,* or, if no assignee of the entire interest has properly been made of record, the most current address information provided for the first named inventor. 37 CFR 3.71(c) states:

> *An assignee becomes of record either in a national patent application or a reexamination proceeding by filing a statement in compliance with § 3.73(b) that is signed by a party who is authorized to act on behalf of the assignee.*

All future communications from the Office will continue to be directed to the above-listed address until properly notified.

There are no outstanding Office actions that require a reply.

Telephone inquires concerning this decision should be directed to the undersigned at (571) 272-6059.

A. Kelley

Alicia Kelley
Petitions Examiner
Office of Petitions