UNITED STATES PATENT AND TRADEMARK OFFICE

UNITED STATES DEPARTMENT OF COMMERCE
United States Patent and Trademark Office
Address: COMMISSIONER FOR PATENTS
P.O. Box 1450
Alexandria, Virginia 22313-1450
www.uspto.gov

APPLICATION NO.	FILING DATE	FIRST NAMED INVENTOR	ATTORNEY DOCKET NO.	CONFIRMATION NO.
12/113,519	05/01/2008	Anthony H. Phillips	GB920080033US1	1179

78571 7590 01/06/2009
Dillon & Yudell LLP
8911 N. Capital of Texas Hwy
Suite 2110
Austin, TX 78759

EXAMINER
TIMBLIN, ROBERT M

ART UNIT	PAPER NUMBER
2167	

MAIL DATE	DELIVERY MODE
01/06/2009	PAPER

Please find below and/or attached an Office communication concerning this application or proceeding.

The time period for reply, if any, is set in the attached communication.

UNITED STATES PATENT AND TRADEMARK OFFICE

Commissioner for Patents
United States Patent and Trademark Office
P.O. Box 1450
Alexandria, VA 22313-1450
www.uspto.gov

DILLON & YUDELL LLP
8911 N. CAPITAL OF TEXAS HWY
SUITE 2110
AUSTIN TX 78759

In re Application of: PHILLIPS et al Serial No.: 12/113,519 Filed: May 01, 2008 Docket: GB920080033US1 Title: ENCODING SEARCH RESULTS AS A SEARCH PERMANENT LINK UNIFORM RESOURCE LOCATOR	DECISION ON PETITION TO MAKE SPECIAL FOR NEW APPLICATION UNDER 37 C.F.R. § 1.102 & M.P.E.P. § 708.02

This is a decision on the petition filed on May 1, 2008 to make the above-identified application special for accelerated examination procedure under 37 C.F.R. § 1.102(d).

The petition to make the application special is **DISMISSED**.

REGULATION AND PRACTICE

A grantable petition to make special under 37 C.F.R. § 1.102(d) and pursuant to the "Change to Practice for Petitions in Patent Applications to Make Special and for Accelerated Examination" published in the Federal Register on June 26, 2006 (71 Fed. Reg. 36323), must satisfy the following conditions:

I. Conditions Regarding the Application:

1. the application must be a non-reissue utility or design application filed under 37 CFR 1.111(a);
2. the application, the petition and the required fees must be filed electronically using the USPTO's electronic filing system (EFS), or EFS-web; if not filed electronically, a statement asserting that EFS and EFS-web were not available during the normal business hours.
3. at the time of filing, the application must be complete under 37 CFR 1.51 and in condition for examination;
4. the application must contain three or fewer independent claims and twenty or fewer total claims and the claims must be directed to a single invention.

II. Conditions Regarding the Petition:

The petition must:

1. be filed with the application;

2. include a statement that applicant agrees that the dependent claims will be grouped together with the corresponding independent claim and not to separately argue the patentability of any dependent claim during any appeal in the application;

3. include a statement that applicant agrees to make an election without traverse in a telephone interview.

4. include a statement that applicant agrees to conduct such an interview when requested by the examiner.

5. include a statement, made based on a good faith belief, that a preexamination search in compliance with the following requirements, was conducted, including an identification of the field of search by United States class and subclass, where applicable, and for database searches, the search logic or chemical structure or sequence used as a query, the name of the file(s) searched and the database service, and the date of the search.

The preexamination search must:

5.1 involve U.S. patents and patent application publications, foreign patent documents, and non-patent literature, unless the applicant can justify with reasonable certainty that no references more pertinent than those already identified are likely to be found in the eliminated sources and includes such a justification with this statement;

5.2. be directed to the claimed invention and encompass all of the features of the claims, giving the claims the broadest reasonable expectation;

5.3. encompass the disclosed features that may be claimed.

6. must provide in support of the petition an accelerated examination support document. An accelerated examination support document must include:

6.1. an information disclosure statement (IDS) in compliance with 37 CFR 1.98 citing each reference deemed most closely related to the subject matter of each of the claims;

6.2. an identification of all the limitations in the claims that are disclosed by the reference specifying where the limitation is disclosed in the cited reference;

6.3. a detailed explanation of how each of the claims are patentable over the references cited with particularity required by 37 CFR 1.111(b) and (c);

6.4. a concise statement of the utility of the invention as defined in each of the independent claims (unless the application is a design application);

6.5. a showing of where each limitation of the claims finds support under 35 USC 112, first paragraph, in the written description of the specification. If applicable, the showing must also identify: (1) each means- (or step) plus-function claim element that invokes consideration under 35 USC 112, sixth paragraph; and (2) the structure, material, or acts in the specification that corresponds to each means- (or step) plus-function claim element that invokes consideration under 35 USC 112, sixth paragraph; if the application claims the benefit of one or more applications under title 35, United States Code, the showing must also include where each limitation of the claims finds support under 35 USC 112, first paragraph, in each such application in which such supports exists;

6.6. an identification of any cited references that may be disqualified under 35 USC 103(c).

REVIEW OF FACTS

The conditions I. 1-4 & II. 1-5, 5.1, and 6.1- 6.6 above are considered to have been met. However, the petition fails to comply with conditions II. 5.2 & 5.3 above. Therefore, the petition fails to meet the required conditions to be accorded special status under the accelerated examination procedure.

Regarding the requirement of MPEP § 708.02(a)(I.)(H)[1] and items 5.2 & 5.3 above, pre-exam search must be directed to the (instant) claimed invention and encompass all of the disclosed features of the (instant) claims. The search logic does not seem to include the inventive concept or features included in the claim language and identified by Petitioner in the detailed explanation of patentability of the claims over the cited references. The search should consider individual features, combination of features as well as synonyms. The search should also cover the broadest scope encompassed by the claims. Based upon the claimed subject matter of the instant application, the following supplemental suggested search is presented:

Additional Class(es)/Subclass(es) should be searched:

707/001; and additional text searches should be conducted as recommended below:

DB=PGPB,USPT,USOC,EPAB,JPAB,DWPI,TDBD; PLUR=YES; OP=OR

L8 l5 and (permanent$2 near3 link$3)	1 L8
L7 L6 and (permanent$2 near3 link$3)	0 L7
L6 L5 and (execut$3 near3 (query or queries))	36 L6
L5 (search$3 near3 engine near3 data near3 store)	224 L5
L4 (search$3 near3 (result or outcome)) same (permanent$2 near2 link$3)	1 L4

The additional search recommendations were confirmed with and recommended by a Primary Examiner in the pertinent art area.

Any additional relevant prior art discovered due to an updated search must be included in the IDS document and meet all of the conditions as set forth in 6.1 - 6.6 above.

Additional searches as stated above for claim 1 is required. Thus, the petition does not meet the conditions II. 5.2 & 5.3 as stated above.

Also, please note that the pre-examination search document and the pre-examination support document are missing signatures. These documents must be resubmitted with appropriate signatures on them. The response(s) submitted based on this decision must contain signatures of the appropriate authority.

DECISION

For the above-stated reasons, the petition is **DISMISSED**. The application will therefore be taken up by the examiner for action in its regular turn.

Petitioner is given ***a single opportunity*** to perfect the petition. Any request for reconsideration of this decision must be submitted within 1 (one) month or 30 (thirty) days, whichever is longer, (no extension of time under 37 CFR 1.136(a) is permitted) from the date of this decision in order to be considered timely. Any request for reconsideration ***must fully address all of the deficiencies indicated above***. [emphasis added]

Petitioner is reminded that, upon granting of the special status of the application on request for reconsideration, the application will be processed expeditiously. However, due to the dismissal of the instant petition, examination may not be completed within twelve months of the filing date of the application.

Any inquiry regarding this decision should be directed to Rehana Perveen, Quality Assurance Specialist, at (571) 272-3676. If attempts to reach the undersigned by telephone are unsuccessful, Kakali Chaki, Quality Assurance Specialist, can be reached at (571) 272-3719.

Rehana Perveen
Quality Assurance Specialist, WG 2160
Technology Center 2100

UNITED STATES PATENT AND TRADEMARK OFFICE

UNITED STATES DEPARTMENT OF COMMERCE
United States Patent and Trademark Office
Address: COMMISSIONER FOR PATENTS
P.O. Box 1450
Alexandria, Virginia 22313-1450
www.uspto.gov

APPLICATION NO.	FILING DATE	FIRST NAMED INVENTOR	ATTORNEY DOCKET NO.	CONFIRMATION NO.
12/113,519	05/01/2008	Anthony H. Phillips	GB920080033US1	1179

78571 7590 04/20/2009
Dillon & Yudell LLP
8911 N. Capital of Texas Hwy
Suite 2110
Austin, TX 78759

EXAMINER
TIMBLIN, ROBERT M

ART UNIT	PAPER NUMBER
2167	

MAIL DATE	DELIVERY MODE
04/20/2009	PAPER

Please find below and/or attached an Office communication concerning this application or proceeding.

The time period for reply, if any, is set in the attached communication.

UNITED STATES PATENT AND TRADEMARK OFFICE

Commissioner for Patents
United States Patent and Trademark Office
P.O. Box 1450
Alexandria, VA 22313-1450
www.uspto.gov

Carlos E. Amorin
DILLON & YUDELL LLP
8911 N. Capital of Texas HWY
Suite 2110
Austin, TX 78759

In re Application of: PHILLIPS et al. Serial No.: 12/113,519 Filed: May 01, 2008 Attorney Docket: GB920080033US1 Title: ENCODING SEARCH RESULTS AS A SEARCH PERMANENT LINK UNIFORM RESOURCE LOCATOR	DECISION ON PETITION TO MAKE SPECIAL FOR NEW APPLICATION UNDER 37 C.F.R. § 1.102 & M.P.E.P. § 708.02

This is a decision on the petition filed on May 1, 2008 to make the above-identified application special for accelerated examination procedure under 37 C.F.R. § 1.102(d).

The petition to make the application special is **DENIED**.

REGULATION AND PRACTICE

A grantable petition to make special under 37 C.F.R. § 1.102(d) and pursuant to the "Change to Practice for Petitions in Patent Applications to Make Special and for Accelerated Examination" published in the Federal Register on June 26, 2006 (71 Fed. Reg. 36323), must satisfy the following conditions:

I. Conditions Regarding the Application:

1. the application must be a non-reissue utility or design application filed under 37 CFR 1.111(a);
2. the application, the petition and the required fees must be filed electronically using the USPTO's electronic filing system (EFS), or EFS-web; if not filed electronically, a statement asserting that EFS and EFS-web were not available during the normal business hours.
3. at the time of filing, the application must be complete under 37 CFR 1.51 and in condition for examination;
4. the application must contain three or fewer independent claims and twenty or fewer total claims and the claims must be directed to a single invention.

II. Conditions Regarding the Petition:

The petition must:

1. be filed with the application;

2. include a statement that applicant agrees not to separately argue the patentability of any independent claim during any appeal in the application;

3. include a statement that applicant agrees to make an election without traverse in a telephone interview.

4. include a statement that applicant agrees to conduct such an interview when requested by the examiner.

5. include a statement, made based on a good faith belief, that a preexamination search in compliance with the following requirements, was conducted, including an identification of the filed of search by United States class and subclass, where applicable, and for database searches, the search logic or chemical structure or sequence used as a query, the name of the file(s) searched and the database service, and the date of the search.

The preexamination search must:

5.1 involve U.S. patents and patent application publications, foreign patent documents, and non-patent literature, unless the applicant can justify with reasonable certainty that no references more pertinent than those already identified are likely to be found in the eliminated sources and includes such a justification with this statement;

5.2. be directed to the claimed invention and encompass all of the features of the claims, giving the claims the broadest reasonable interpretation;

5.3. encompass the disclosed features that may be claimed.

6. must provide in support of the petition an accelerated examination support document. An accelerated examination support document must include:

6.1. an information disclosure statement (IDS) in compliance with 37 CFR 1.98 citing each reference deemed most closely related to the subject matter of each of the claims;

6.2. an identification of all the limitations in the claims that are disclosed by the reference specifying where the limitation is disclosed in the cited reference;

6.3. a detailed explanation of how each of the claims is patentable over the references cited with particularity required by 37 CFR 1.111(b) and (c);

6.4. a concise statement of the utility of the invention as defined in each of the independent claims (unless the application is a design application);

6.5. a showing of where each limitation of the claims finds support under 35 USC 112, first paragraph, in the written description of the specification. If applicable, the showing must also identify: (1) each means- (or step) plus-function claim element that invokes consideration under 35 USC 112, sixth paragraph; and (2) the structure, material, or acts in the specification that corresponds to each means- (or step) plus-function claim element that invokes consideration under 35 USC 112, sixth paragraph; if the application claims the benefit of one or more applications under title 35, United States Code, the showing must also include where each limitation of the claims finds support under 35 USC 112, first paragraph, in each such application in which such supports exists;

6.6. an identification of any cited references that may be disqualified under 35 USC 103(c).

REVIEW OF FACTS

The conditions I.1 - I.4, II.1 - II.4, II.5.1, and II.6.1-II.6.6 above are considered to have been met. However, the petition fails to comply with conditions II.5.2 and II.5.3 above. Therefore, the petition fails to meet the required conditions to be accorded special status under the accelerated examination procedure.

Regarding to the requirement of MPEP § 708.02(a)(I.)(H) and item II.5.2 – II.5.3 above, preexamination search must be directed to the (instant) claimed invention and encompass all of the disclosed features of the (instant) claims. The search logic does not seem to include the inventive concept or features included in the claim language and identified by Petitioner in the detailed explanation of patentability of the claims over the cited references. The search should consider individual features, combination of features as well as synonyms. The search should also cover the broadest scope encompassed by the claims. Based upon the claimed subject matter of the instant application, the following supplemental suggested search is presented:

Additional Class(es)/Subclass(es) should be searched:

707/001; and additional text search should be conducted as recommended below:

DB=PUPB, USPT, USOC, EPAB; JPAB, DWPI, TDBD; PLUR=YES; OP=OR

L8 15 and (permanent$2 near3 link$3)	1 L8
L7 L6 and (permanent$2 near3 link$3)	0 L7
L6 L5 and (execut$3 near3 (query or queries))	36 L6
L5 (search$3 near3 engine near3 data near3 store)	224 L5
L4 (search$3 near3 (result or outcome)) same (permanent$2 near2 link$3)	1 L4

The additional search recommendations were confirmed with and recommended by a Primary Examiner in the pertinent art area.

Additional searches as stated above for claim 1 is required. Thus, the petition does not meet the conditions II.5.2 and 5.3 as stated above.

DECISION

For the above-stated reasons, the petition is **denied**. The application will therefore be taken up by the examiner for action in its regular turn.

Any inquiry concerning this decision should be directed to the undersigned whose telephone number is (571) 272-3613.

Vincent N. Trans, SPRE/QAS
Technology Center 2100
Computer Architecture, Software, and
Information Security

UNITED STATES PATENT AND TRADEMARK OFFICE

UNITED STATES DEPARTMENT OF COMMERCE
United States Patent and Trademark Office
Address: COMMISSIONER FOR PATENTS
P.O. Box 1450
Alexandria, Virginia 22313-1450
www.uspto.gov

APPLICATION NO.	FILING DATE	FIRST NAMED INVENTOR	ATTORNEY DOCKET NO.	CONFIRMATION NO.
12/113,556	05/01/2008	Chao-Kun LIN	030348.00016	1257

68543 7590 02/22/2010
Arent Fox LLP
555 West Fifth Street
48th Floor
Los Angeles, CA 90013

EXAMINER
NGUYEN, DAO H

ART UNIT	PAPER NUMBER
2818	

NOTIFICATION DATE	DELIVERY MODE
02/22/2010	ELECTRONIC

Please find below and/or attached an Office communication concerning this application or proceeding.

The time period for reply, if any, is set in the attached communication.

Notice of the Office communication was sent electronically on above-indicated "Notification Date" to the following e-mail address(es):

LAIPDocket@arentfox.com
Patent_Mail@arentfox.com

UNITED STATES PATENT AND TRADEMARK OFFICE

Commissioner for Patents
United States Patent and Trademark Office
P.O. Box 1450
Alexandria, VA 22313-1450
www.uspto.gov

Arent Fox LLP
555 West Fifth Street
48th Floor
Los Angeles CA 90013

In re Application of	:	
Chao-Kun LIN	:	DECISION ON PETITION
Application No. 12/113,556	:	TO MAKE SPECIAL UNDER
Filed: 01 May 2008	:	THE GREEN TECHNOLOGY
Attorney Docket No. 030348.00016	:	PILOT PROGRAM

This is a decision on the petition under 37 CFR 1.102, filed 14 January 2010, to make the above-identified application special under the pilot program for applications pertaining to Green Technologies as set forth 74 Federal Register Notice 64666 (December 8, 2009).

The petition is **GRANTED**.

A grantable petition to make an application special under 37 CFR 1.102 and the pilot program as set forth in 74 FR 64666 must be directed to a nonprovisional application filed under 35 USC 111(a) or be a national stage entry under 35 USC 371, exclusive of any reissue applications and be filed prior to the date of the notice, December 8, 2009.

In order to qualify for special status, the following requirements must be met. 1) The application must be classified in one of the eligible US classifications listed in section VI of the notice. 2) The application must have no more than 3 independent claims and no more than 20 total claims. 3) The application must not contain any multiple dependent claims. 4) The petition must state the basis for seeking special status, i.e., the claimed invention either: A) materially enhances the quality of the environment or B) materially contributes to: i) the discovery or development of renewable energy resources, ii) the more efficient utilization and conservation of energy resources, or iii) greenhouse gas emission reduction. 5) If the disclosure is not clear on its face that the claimed invention materially contributes under category (A) or (B), the petition must be accompanied by a statement by the applicant, assignee, or an attorney/agent registered to practice before the Office explaining how the materiality standard is met. 6) A statement that applicant will agree to make an election without traverse in a telephonic interview if a restriction requirement is made by the examiner. 7) The petition to make special must be filed electronically. 8) The petition must be filed at least one day prior to the date that a first Office Action appears in the Patent Application Information Retrieval (PAIR) system. 9) The petition

must be accompanied by a request for early publication in compliance with 37 CFR 1.219 and include the publication fee as set forth in 37 CFR 1.18(d).

The requirement for a fee for consideration of the petition to make special for applications pertaining to Green Technologies has been waived.

The instant petition complies with items 1 – 9 above. Accordingly, the above-identified application has been accorded "special" status.

Telephone inquires concerning this decision should be directed to Lee W. Young at 571-272-4549.

The application is being forwarded to the Technology Center Art Unit 2818 for action on the merits commensurate with this decision.

Lee W. Young
Quality Assurance Specialist
Technology Center 2800

UNITED STATES PATENT AND TRADEMARK OFFICE

Commissioner for Patents
United States Patent and Trademark Office
P.O. Box 1450
Alexandria, VA 22313-1450
www.uspto.gov

REED SMITH, LLP
10 SOUTH WACKER DRIVE
CHICAGO, IL 60606-7507

MAILED

JUN 15 2009

OFFICE OF PETITIONS

In re Application of	:	
Stella DAO, et al	:	
Application No. 12/113,563	:	DECISION ON PETITION
Filed: May 1, 2008	:	TO WITHDRAW
Attorney Docket No. 324664.00002	:	FROM RECORD
	:	

This is a decision on the Request to Withdraw as attorney or agent of record under 37 C.F.R. § 1.36(b), April 30, 2009.

The request is **APPROVED**.

A grantable request to withdraw as attorney/agent of record must be signed by every attorney/agent seeking to withdraw or contain a clear indication that one attorney is signing on behalf of another/others. The Office requires the practitioner(s) requesting withdrawal to certify that he, she, or they have: (1) given reasonable notice to the client, prior to the expiration of the response period, that the practitioner(s) intends to withdraw from employment; (2) delivered to the client or a duly authorized representative of the client all papers and property (including funds) to which the client is entitled; and (3) notified the client of any responses that may be due and the time frame within which the client must respond, pursuant 37 CFR 10.40(c).

The request was signed by Michael M. Geoffrey on behalf of the attorneys of record associated with Customer No. 35614.

The attorneys of record associated with Customer No. 35614 have been withdrawn.

Applicant is reminded that there is no attorney of record at this time.

The request to change the correspondence address of record is not acceptable as the requested correspondence address is not that of: (1) the first named signing inventor; or (2) an intervening assignee of the entire interest under 37 C.F.R 3.71. All future communications from the Office will be directed to the first named signing inventor at the first copied address below until otherwise properly notified by the applicant.

Telephone inquiries concerning this decision should be directed to the undersigned at 571-272-6735.

Diane Goodwyn
Petitions Examiner
Office of Petitions

cc: STELLA DAO
2526 CAPITOL AVENUE
SACRAMENTO, CA 95816

UNITED STATES PATENT AND TRADEMARK OFFICE

UNITED STATES DEPARTMENT OF COMMERCE
United States Patent and Trademark Office
Address: COMMISSIONER FOR PATENTS
P.O. Box 1450
Alexandria, Virginia 22313-1450
www.uspto.gov

APPLICATION NUMBER	FILING OR 371(C) DATE	FIRST NAMED APPLICANT	ATTY. DOCKET NO./TITLE
12/113,563	05/01/2008	Stella Dao	324664.00002

CONFIRMATION NO. 1270

POWER OF ATTORNEY NOTICE

35614
Reed Smith, LLP
10 SOUTH WACKER DRIVE
CHICAGO, IL 60606-7507

OC000000036461058

Date Mailed: 06/12/2009

NOTICE REGARDING CHANGE OF POWER OF ATTORNEY

This is in response to the Power of Attorney filed 04/30/2009.

- The withdrawal as attorney in this application has been accepted. Future correspondence will be mailed to the new address of record. 37 CFR 1.33.

/dcgoodwyn/

Office of Data Management, Application Assistance Unit (571) 272-4000, or (571) 272-4200, or 1-888-786-0101

UNITED STATES PATENT AND TRADEMARK OFFICE

UNITED STATES DEPARTMENT OF COMMERCE
United States Patent and Trademark Office
Address: COMMISSIONER FOR PATENTS
P.O. Box 1450
Alexandria, Virginia 22313-1450
www.uspto.gov

APPLICATION NO.	FILING DATE	FIRST NAMED INVENTOR	ATTORNEY DOCKET NO.	CONFIRMATION NO.
12/113,579	05/01/2008	Daisuke Aoki	03500.148920.	1305

5514 7590 09/21/2009
FITZPATRICK CELLA HARPER & SCINTO
1290 Avenue of the Americas
NEW YORK, NY 10104-3800

EXAMINER
WONG, JOSEPH S

ART UNIT	PAPER NUMBER
2852	

MAIL DATE	DELIVERY MODE
09/21/2009	PAPER

Please find below and/or attached an Office communication concerning this application or proceeding.

The time period for reply, if any, is set in the attached communication.

UNITED STATES PATENT AND TRADEMARK OFFICE

Commissioner for Patents
United States Patent and Trademark Office
P.O. Box 1450
Alexandria, VA 22313-1450
www.uspto.gov

FITZPATRICK, CELLA, HARPER & SCINTO
30 ROCKEFELLER PLAZA
NEW YORK, NY 10112-3800

In re Application of	**: DECISION ON REQUEST TO**
Daisuke AOKI et al.	**: PARTICIPATE IN THE PATENT**
Application No.: 12/113,579	**: PROSECUTION HIGHWAY**
Filed: 01 May 2008	**: PROGRAM AND PETITION**
Attorney Docket No.: 03500.148920	**: TO MAKE SPECIAL UNDER**
For: COLOR ELECTROPHOTOGRAPHIC IMAGE FORMING APPARATUS	**: 37 CFR 1.102(d)**

This is a decision on the request to participate in the Patent Prosecution Highway (PPH) program and the petition under 37 CFR 1.102(d), filed 24 June 2009, to make the above-identified application special.

The request and petition are **GRANTED**.

Discussion

A grantable request to participate in the PPH pilot program and petition to make special require:

1. The U.S. application is

    a. a Paris Convention application which either
        i. validly claims priority under 35 U.S.C. 119(a) and 37 CFR 1.55 to one or more applications filed in the JPO, or
        ii. validly claims priority to a PCT application that contains no priority claims,

    or

    b. a national stage application under the PCT (an application which entered the national stage in the U.S. from a PCT international application after compliance with 35 U.S.C. 371), which PCT application
        i. validly claims priority to an application filed in the JPO, or
        ii. validly claims priority to a PCT application that contains no priority claims, or
        iii. contains no priority claim,

    or

    c. a so-called bypass application filed under 35 U.S.C. 111(a) which validly claims benefit under 35 U.S.C. 120 to a PCT application, which PCT application
        i. validly claims priority to an application filed in the JPO, or

ii. validly claims priority to a PCT application that contains no priority claims, or
iii. contains no priority claim;

2. Applicant must submit a copy of:
   a. The allowable/patentable claim(s) from the JPO application(s);
   b. An English translation of the allowable/patentable claim(s) and
   c. A statement that the English translation is accurate;
3. Applicant must:
   a. Ensure all the claims in the U.S. application must sufficiently correspond or be amended to sufficiently correspond to the allowable/patentable claim(s) in the JPO application(s) and
   b. Submit a claims correspondence table in English;
4. Examination of the U.S. application has <u>not</u> begun;
5. Applicant must submit:
   a. Documentation of prior office action:
      i. a copy of the office action(s) just prior to the "Decision to Grant a Patent" from each of the JPO application(s) containing the allowable/patentable claim(s) or
      ii. if the allowable/patentable claims(s) are from a "Notification of Reasons for Refusal" then the Notification of Reasons for Refusal or
      iii. if the JPO application is a first action allowance then no office action from the JPO is necessary should be indicated on the request/petition form;
   b. An English language translation of the JPO Office action from (5)(a)(i)-(ii) above
   c. A statement that the English translation is accurate;
6. Applicant must submit:
   a. An IDS listing the documents cited by the JPO examiner in the JPO office action (unless already submitted in this application)
   b. Copies of the documents except U.S. patents or U.S. patent application publications (unless already submitted in this application);
7. The required petition fee under 37 CFR 1.17(h).

The request to participate in the PPH pilot program and petition comply with the above requirements. Accordingly, the above-identified application has been accorded "special" status.

Telephone inquiries concerning this decision should be directed to Darren Schuberg at 571-272-2044.

All other inquiries concerning the examination or status of the application is accessible in the PAIR system at http://www.uspto.gov/ebc.index.html.

This application will be forwarded to the examiner for action on the merits commensurate with this decision once this application's formality reviews have been completed.

Darren Schuberg
TQAS
Technology Center 2800 – Semiconductors
Electrical & Optical Systems & Components

3 0 SEP 2008

UNITED STATES PATENT AND TRADEMARK OFFICE

Commissioner for Patents
United States Patent and Trademark Office
P.O. Box 1450
Alexandria, VA 22313-1450
www.uspto.gov

GREER, BURNS & CRAIN
300 S WACKER DR
25TH FLOOR
CHICAGO IL 60606

In re Application of	:	
UEDA, Masanori, et al.	:	DECISION ON
Application No.: 12/113,600	:	
Filing Date: 01 May 2008	:	PETITION
Attorney Docket No.: 1115.80680	:	
For: INFORMATION STORAGE	:	UNDER 37 CFR 1.137(b)
APPARATUS	:	

Applicant's petition under 37 C.F.R. 1.137(b), filed in the United States Patent and Trademark Office on 01 May 2008 is **GRANTED**.

BACKGROUND

On 01 May 2008, applicant filed, *inter alia,* a transmittal letter for a continuation application accompanied by this petition.

DISCUSSION

A petition to revive an abandoned application under 37 CFR 1.137(b) must be filed without intentional delay from the time the application became abandoned and/or applicant first became aware of the abandoned status of the application. A petition under 37 CFR 1.137(b) must be accompanied by (1) a statement that the entire delay in filing the required reply from the due date for the reply until the filing of a grantable petition was unintentional, (2) a proposed response, (3) the petition fee required by law (37 CFR 1.17(m)), and (4) a terminal disclaimer and fee (if the international application was filed prior to June 8, 1995).

Applicant states that the entire delay in filing the required reply from the due date for the required reply until the filing of a grantable petition under 37 CFR 1.137(b) was unintentional, as required by 37 CFR 1.137(b)(3). The appropriate petition fee has been paid. A proper response in the form of a continuing application under 35 U.S.C. 111(a) has been submitted. A terminal disclaimer is not required as the application was filed on or after 08 June 1995. Accordingly, all requirements under 37 CFR 1.137(b) have been satisfied.

CONCLUSION

The petition to revive international application PCT/JP2005/018149 abandoned under 37 CFR 1.137(b) is **GRANTED** as to the National Stage in the United States of America for purposes of continuity only and since continuity has been established by this decision reviving

the international application, the international application is again abandoned in favor of the present continuing application number 12/113,600.

This application is being referred to the Office of Patent Application Processing for processing as a regular U.S. application under 35 U.S.C. 111(a).

/Erin P. Thomson/

Erin P. Thomson
Attorney Advisor
PCT Legal Administration

Telephone: 571-272-3292
Facsimile: 571-273-0459

UNITED STATES PATENT AND TRADEMARK OFFICE

Commissioner for Patents
United States Patent and Trademark Office
P.O. Box 1450
Alexandria, VA 22313-1450
www.uspto.gov

DANIEL KATZ
87 TZAHAL ST.
KIRYAT-ONO 55451 IL ISRAEL

MAIL

SEP 19 2008

DIRECTOR'S OFFICE
TECHNOLOGY CENTER 2600

In re Application of:
KATZ, DANIEL A..
Serial No.: 12/113,623
Filed: May 1, 2008

Title: **CHANNEL ALLOCATION FOR BURST TRANSMISSION TO A DIVERSITY OF SATELLITES**

DECISION ON PETITION TO MAKE SPECIAL FOR NEW APPLICATION UNDER 37 C.F.R. § 1.102 & M.P.E.P. § 708.02

The petition to make the application special is **GRANTED**.

The application is eligible for accelerated examination and the petition complies with the conditions for granting the application special status pursuant to the "Change to Practice for Petitions in Patent Applications to Make Special and for Accelerated Examination" published June 26, 2006, in the Federal Register. (71 Fed. Reg. 36323).

The prosecution of the instant application will be conducted expeditiously according to the following guidelines.

1. The application will be docketed to an examiner and taken up for action within two weeks of the date of this decision.

2. Restriction Practice:
   If the examiner determines that the claims are not directed to a single invention, a telephone request to elect one single invention will be made pursuant to MPEP 812.01. As a prerequisite to the grant of this petition, the applicant has agreed to make an oral election, by telephone, without traverse. If the applicant refuses to make an election without traverse, or the examiner cannot reach the applicant after a reasonable effort, the examiner will treat the first claimed invention (invention defined by claim 1) as having being constructively elected without traverse for examination.

3. Office action:

If it is determined that, after appropriate consultation, there is a potential rejection or any other issue to be addressed, the examiner will telephone the applicant and arrange an interview to discuss and resolve the issue. An Office action, other than a Notice of Allowance and Fee(s) Due (Notice of Allowance), will not be issued unless either: 1) an interview was conducted but did not result in agreed to action that places the application in condition for allowance, or, 2) a determination is made that an interview would be unlikely to result in the application being placed in condition for allowance, and 3) an internal conference has been held to review any rejection of any claim.

4. Time for Reply:
An Office action other than a Notice of Allowance or a final Office action will set a shortened statutory period of one month or thirty days, whichever is longer, for reply with no extension of time available under 37 CFR 1.136(a). Failure to timely file a reply within this non-extendible period for reply will result in the abandonment of the application.

5. Reply by Applicant:
A timely reply to an Office action other than the Notice of Allowance must be submitted electronically via EFS or EFS-web and limited to addressing the rejections, objections and requirement made. Any amendment that attempts to: 1) add claims which would result in more than three pending independent claims or more than twenty pending total claims; 2) present claims not encompassed by the pre-examination search or an updated accelerated examination support document; or 3) present claims that are directed a non-elected invention or an invention other than that previously claimed and examined in the application, will be treated as not fully responsive and will not be entered.

   For any amendment to the claims (including any new claim) that is not encompassed by the accelerated examination support document, applicant must provide an updated accelerated examination support document that encompasses the amended or new claims at the time of filing of the amendment.

   To proceed expeditiously with the examination, it is recommended that a reply with amendments made to any claim or with any new claim being added be accompanied by an updated accelerated examination support document or a statement explaining how the amended or new claim is supported by the original accelerated examination support document.

6. Information Disclosure Statement (IDS):
Any IDS filed during prosecution must be submitted electronically via EFS or EFS-web, accompanied by an updated accelerated examination support document, and be in compliance with 37 CFR 1.97 and 1.98.

7. Post-Allowance Processing:
To expedite processing of the allowed application into a patent, the applicant must: 1) pay the required fees within one month of the date of the Notice of Allowance, and 2) not

file any post allowance papers not required by the Office. In no event may the issue fee be paid and accepted later than three months from the date of the Notice of Allowance.

8. After-Final and Appeal Procedures:
   To expedite prosecution, after receiving the final Office action, applicant must: 1) promptly file a notice of appeal, an appeal brief and appeal fees; and 2) not request a pre-appeal brief conference.

   Any amendment, affidavit or other evidence filed after final Office action must comply with applicable rules and the requirements outlined in numbered paragraphs 5 and 6 above.

   On appeal, the application will proceed according to normal appeal procedures. After appeal, the application will again be treated special.

9. Proceedings Outside the Normal Examination Process:
   If the application becomes involved in a proceeding that is outside the normal examination process (e.g., a secrecy order, national security review, interference proceeding, petitions under 37 CFR 1.181, 182 or 183), the application will be treated special before and after such proceeding.

10. Final Disposition:
    The twelve month goal of this accelerated examination procedure ends with a final disposition. The mailing of a final Office action, a Notice of Allowance, the filing of a Notice of Appeal, or the filing of a Request for Continued Examination (RCE) is the final disposition.

If, during prosecution, a paper is not filed electronically using EFS-web, a reply is filed but is not fully responsive, the application is involved in an appeal, or a proceeding outside normal examination process, the application will still be examined expeditiously, however, the final disposition may occur more than twelve months from the filing of the application.

Any inquiry regarding this decision should be directed to Ken Wieder, Quality Assurance Specialist, at (571) 272-2986.

Kenneth A. Wieder
Quality Assurance Specialist
Technology Center 2600 Communications

UNITED STATES PATENT AND TRADEMARK OFFICE

Commissioner for Patents
United States Patent and Trademark Office
P.O. Box 1450
Alexandria, VA 22313-1450
www.uspto.gov

CAREY RODRIGUEZ GREENBERG & PAUL, LLP
STEVEN M. GREENBERG
950 PENINSULA CORPORATE CIRCLE, SUITE 3020
BOCA RATON, FL 33487

COPY MAILED
JAN 16 2009

In re Application of	:	
Frank Leymann et al	:	
Application No. 12/113,651	:	DECISION DISMISSING PETITION
Filed: May 1, 2008	:	UNDER 37 CFR 1.78(a)(3)
Attorney Docket No. DE920020010US2 (325CON)	:	

This is a decision on the petition under 37 CFR 1.78(a)(3), filed November 24, 2008, to accept an unintentionally delayed claim under 35 U.S.C. §120 for the benefit of priority to prior-filed nonprovisional Application.

The petition is **DISMISSED**.

A petition for acceptance of a claim for late priority under 37 CFR 1.78(a)(3) is only applicable to those applications filed on or after November 29, 2000 and after the expiration of the period specified in 37 CFR 1.78(a)(2)(ii). In addition, the petition under 37 CFR 1.78(a)(3) must be accompanied by:

(1) the reference required by 35 U.S.C. § 120 and 37 CFR 1.78(a)(2)(i) of the prior-filed application, unless previously submitted;
(2) the surcharge set forth in § 1.17(t); and
(3) a statement that the entire delay between the date the claim was due under 37 CFR 1.78(a)(2)(ii) and the date the claim was filed was unintentional. The Director may require additional information where there is a question whether the delay was unintentional.

The amendment as drafted is unacceptable and, therefore, is not considered a proper reference under 37 CFR 1.78(a)(2)(i). In this regard, the amendment is physically part of the petition and, as such, does not comply with 37 CFR 1.121, 1.52, or 1.4(c). Note that 37 CFR 1.121 states that amendments are made by filing a paper, in compliance with § 1.52, directing that specified amendments be made. The pertinent section of 37 CFR 1.52 states that the claim (in this case, the claim for priority), must commence on a separate physical sheet. 37 CFR 1.4(c) states that

each distinct subject must be contained in a separate paper since different matters may be considered by different branches of the United States Patent and Trademark Office.

The Application Data Sheet submitted with the petition on November 24, 2008 does not list the Application Number; i.e., 12/113,651. Petitioner must submit the Application Number for the prior Application Status.

Before the petition can be granted, petitioner must submit a substitute amendment in compliance with the aforementioned rules, along with a renewed petition under 37 CFR 1.78(a)(3).[1]

Further correspondence with respect to this matter should be addressed as follows:

By mail: Mail Stop PETITIONS
Commissioner for Patents
Post Office Box 1450
Alexandria, VA 22313-1450

By hand: Customer Service Window
Mail Stop Petitions
Randolph Building
401 Dulany Street
Alexandria, VA 22314

By fax: (571) 273-8300
ATTN: Office of Petitions

Any questions concerning this matter may be directed to Irvin Dingle at (571) 272-3210.

David Bucci
Petitions Examiner
Office of Petitions

[1] The claim for priority may also be made in an Application Data Sheet in compliance with 37 CFR 1.121 and 37 CFR 1.76(b)(5).

UNITED STATES PATENT AND TRADEMARK OFFICE

Commissioner for Patents
United States Patent and Trademark Office
P.O. Box 1450
Alexandria, VA 22313-1450
www.uspto.gov

CAREY RODRIGUEZ GREENBERG & PAUL, LLP
STEVEN M. GREENBERG
950 PENINSULA CORPORATE CIRCLE
SUITE 3020
BOCA RATON, FL 33487

MAILED

MAR 26 2009

OFFICE OF PETITIONS

In re Application of	:	
Frank Leymann et al	:	
Application No. 12/113,651	:	DECISION ON PETITION
Filed: May 1, 2008	:	UNDER 37 CFR 1.78(a)(3)
Attorney Docket No. DE920020010US2 (325CON)	:	

This is a decision on the renewed petition under 37 CFR 1.78(a)(3), filed February 18, 2009, to accept an unintentionally delayed claim under 35 U.S.C. § 120 for the benefit of priority to the prior-filed nonprovisional application set forth in the amendment and Application Data Sheet filed with the petition.

The petition is **DISMISSED**.

A petition for acceptance of a claim for late priority under 37 CFR 1.78(a)(3) is only applicable to those applications filed on or after November 29, 2000. Further, the petition is appropriate only after the expiration of the period specified in 37 CFR 1.78(a)(2)(ii). In addition, the petition under 37 CFR 1.78(a)(3) must be accompanied by:

(1) the reference required by 35 U.S.C. § 120 and 37 CFR 1.78(a)(2)(i) of the prior-filed application, unless previously submitted;
(2) the surcharge set forth in § 1.17(t); and
(3) a statement that the entire delay between the date the claim was due under 37 CFR 1.78(a)(2)(ii) and the date the claim was filed was unintentional. The Director may require additional information where there is a question whether the delay was unintentional.

The petition does not satisfy item (1) above.

The reference to add the above-noted, prior-filed application in the first sentence of the specification on page one following the title is not acceptable as drafted since it improperly incorporates by reference the prior-filed application. An incorporation

by reference statement added after an application's filing date is not effective because no new matter can be added to an application after its filing date (*see* 35 U.S.C. § 132(a)). If an incorporation by reference statement is included in an amendment to the specification to add a benefit claim under 35 U.S.C. § 120 after the filing date of the application, the amendment would not be proper. When a benefit claim under 35 U.S.C. § 120 is submitted after the filing of an application, the reference to the prior application cannot include an incorporation by reference statement of the prior application. *See* Dart Industries v. Banner, 636 F.2d 684, 207 USPQ 273 (C.A.D.C. 1980). *Note* MPEP §§ 201.06(c) and 608.04(b).

If reconsideration of this decision is desired, a renewed petition under 37 CFR § 1.78(a)(3) and an amendment (complying with the provisions of 37 CFR 1.121 and 37 CFR 1.76(b)(5)) deleting the incorporation by reference statement are required.

Further correspondence with respect to this matter should be addressed as follows:

By mail: Mail Stop PETITIONS
Commissioner for Patents
Post Office Box 1450
Alexandria, VA 22313-1450

By hand: Customer Service Window
Mail Stop Petitions
Randolph Building
401 Dulany Street
Alexandria, VA 22314

By fax: (571) 273-8300
ATTN: Office of Petitions

Any questions concerning this matter may be directed to Irvin Dingle at (571) 272-3210.

David Bucci
Petition Examiner
Office of Petitions

PATENT

IN THE UNITED STATES PATENT AND TRADEMARK OFFICE

In Application of	:	Customer Number: 46320
Frank Leymann, et al.	:	Confirmation Number: 1463
Application No.: 12/113,651	:	Group Art Unit: 3623
Filed: May 1, 2008	:	Examiner: Not yet assigned

For: RESOURCE SCHEDULING IN WORKFLOW MANAGEMENT SYSTEMS

Attorney Docket Number: DE920020010US2 (325CON)

Mail Stop Petition
Commissioner for Patents
P.O. Box 1450
Alexandria, VA 22313-1450

RENEWED PETITION TO ACCEPT UNINTENTIONALLY DELAYED

CLAIM FOR PRIORITY TO A DOMESTIC APPLICATION

UNDER 37 C.F.R. § 1.78 (a)(3)

TO THE COMMISSIONER OF PATENTS

Petitioner hereby respectfully requests the Commissioner of Patents to grant this Petition to Accept Unintentionally Delayed Claim for Priority to a Domestic Application under 37 C.F.R. § 1.78 (a)(3).

Adjustment date: 03/26/2009 CKHLOK
02/19/2009 INTEFSW 00002113 12113651
01 FC:1454 -1410.00 OP
Refund Ref:
03/26/2009 0030068169

Credit Card Refund Total: $1410.00

Am Exp..: XXXXXXXXXXX3008

Finally, as required by MPEP 201.11, Petitioner hereby encloses a copy of the ADS associated with Application Number 12/113,651.

Petitioner respectfully requests the Commissioner of Patents to grant its Petition to Accept an Unintentional Delayed Claim for Priority to a Domestic Application under 37 C.F.R. § 1.78 (a)(3).

February 17, 2009

Respectfully submitted,

/Scott D. Paul/
Scott D. Paul
Registration No. 42,984
Steven M. Greenberg
Registration No. 44,725
Phone: (561) 922-3845
CUSTOMER NUMBER 46320

UNITED STATES PATENT & TRADEMARK OFFICE
Washington, D.C. 20231

REQUEST FOR PATENT FEE REFUND

1 Date of Request: 03/17/09

2 Serial/Patent # 12/113,651

	3 Please refund the following fee(s):	4 PAPER NUMBER	5 DATE FILED	6 AMOUNT
	Filing			$
	Amendment			$
	Extension of Time			$
	Notice of Appeal/Appeal			$
X	Petition 1454		02/18/09	$ 1,410.00
	Issue			$
	Cert of Correction/Terminal Disc.			$
	Maintenance			$
	Assignment			$
	Other			$

Credit Card

7 TOTAL AMOUNT OF REFUND $ 1,410.00

8 TO BE REFUNDED BY:

	Treasury Check
	Credit Deposit A/C #:

9 [ ][ ]--[ ][ ][ ][ ]

10 REASON:

	Overpayment
X	Duplicate Payment
	No Fee Due (Explanation):

11 REFUND REQUESTED BY:

TYPED/PRINTED NAME: Irvin Dingle TITLE: Paralegal

SIGNATURE: Irvin Dingle PHONE: 2-3210

OFFICE: Petitions

****

THIS SPACE RESERVED FOR FINANCE USE ONLY:

APPROVED: [illegible] DATE: 3/26/09

Instructions for completion of this form appear on the back. After completion, attach white and yellow copies to the official file and mail or hand-carry to:

Office of Finance
Refund Branch
Crystal Park One, Room 802B

FORM PTO 1577
(01/90)

UNITED STATES PATENT AND TRADEMARK OFFICE

Commissioner for Patents
United States Patent and Trademark Office
P.O. Box 1450
Alexandria, VA 22313-1450
www.uspto.gov

CAREY RODRIGUEZ GREENBERG & PAUL LLP
STEVEN M. GREENBERG
950 PENINSULA CORPORATE CIRCLE
SUITE 3020
BOCA RATON, FL 33487

COPY MAILED

SEP 29 2009

OFFICE OF PETITIONS

In re Application of	:
Frank Leymann et al	:
Application No. 12/113,651	: DECISION ON PETITION
Filed: May 1, 2008	: UNDER 37 CFR 1.78(a)(3)
Attorney Docket No. DE920020010US2 (325CON)	:

This is a decision on the renewed petition under 37 CFR 1.78(a)(3), filed April 21, 2009, to accept an unintentionally delayed claim under 35 U.S.C. § 120 for the benefit of priority to the prior-filed nonprovisional application set forth in the amendment filed with the petition.

The petition is **GRANTED**.

A petition for acceptance of a claim for late priority under 37 CFR 1.78(a)(3) is only applicable to those applications filed on or after November 29, 2000. Further, the petition is appropriate only after the expiration of the period specified in 37 CFR 1.78(a)(2)(ii). In addition, the petition under 37 CFR 1.78(a)(3) must be accompanied by:

(1) the reference required by 35 U.S.C. § 120 and 37 CFR 1.78(a)(2)(i) of the prior-filed application, unless previously submitted;
(2) the surcharge set forth in § 1.17(t); and
(3) a statement that the entire delay between the date the claim was due under 37 CFR 1.78(a)(2)(ii) and the date the claim was filed was unintentional. The Director may require additional information where there is a question whether the delay was unintentional.

All of the above requirements having been satisfied, the late claim for priority under 35 U.S.C. § 120 is accepted as being unintentionally delayed.

The granting of the petition to accept the delayed benefit claim to the prior-filed application under 37 CFR 1.78(a)(3) should not be construed as meaning that this application is entitled to the benefit of the prior-filed application. In order for this application to be entitled to the

benefit of the prior-filed application, all other requirements under 35 U.S.C. § 120 and 37 CFR 1.78(a)(1) and (a)(2) must be met. Similarly, the fact that the corrected Filing Receipt accompanying this decision on petition includes the prior-filed application should not be construed as meaning that applicant is entitled to the claim for benefit of priority to the prior-filed application noted thereon. Accordingly, the examiner will, in due course, consider this benefit claim and determine whether the application is entitled to the benefit of the earlier filing date.

A corrected Filing Receipt, which includes the priority claim to the prior-filed nonprovisional application, accompanies this decision on petition.

Any inquiries concerning this decision may be directed to Irvin Dingle at (571) 272-3210. All other inquiries concerning either the examination procedures or status of the application should be directed to the Technology Center.

This application is being forwarded to Technology Center Art Unit 2195 for consideration by the examiner of applicant's entitlement to claim benefit of priority under 35 U.S.C. § 120 to the prior-filed application.

/dab/
David Bucci
Petition Examiner
Office of Petitions

ATTACHMENT: Corrected Filing Receipt

UNITED STATES PATENT AND TRADEMARK OFFICE

UNITED STATES DEPARTMENT OF COMMERCE
United States Patent and Trademark Office
Address: COMMISSIONER FOR PATENTS
P.O. Box 1450
Alexandria, Virginia 22313-1450
www.uspto.gov

APPLICATION NUMBER	FILING or 371(c) DATE	GRP ART UNIT	FIL FEE REC'D	ATTY.DOCKET.NO	TOT CLAIMS	IND CLAIMS
12/113,651	05/01/2008	2195	1030	DE920020010US2 (325CON)	20	2

CONFIRMATION NO. 1463

CORRECTED FILING RECEIPT

OC000000038023057

46320
CAREY, RODRIGUEZ, GREENBERG & PAUL, LLP
STEVEN M. GREENBERG
950 PENINSULA CORPORATE CIRCLE
SUITE 3020
BOCA RATON, FL 33487

Date Mailed: 09/29/2009

Receipt is acknowledged of this non-provisional patent application. The application will be taken up for examination in due course. Applicant will be notified as to the results of the examination. Any correspondence concerning the application must include the following identification information: the U.S. APPLICATION NUMBER, FILING DATE, NAME OF APPLICANT, and TITLE OF INVENTION. Fees transmitted by check or draft are subject to collection. Please verify the accuracy of the data presented on this receipt. **If an error is noted on this Filing Receipt, please submit a written request for a Filing Receipt Correction. Please provide a copy of this Filing Receipt with the changes noted thereon. If you received a "Notice to File Missing Parts" for this application, please submit any corrections to this Filing Receipt with your reply to the Notice. When the USPTO processes the reply to the Notice, the USPTO will generate another Filing Receipt incorporating the requested corrections**

Applicant(s)

Frank Leymann, Aidlingen, GERMANY;
Dieter Roller, Schoenaich, GERMANY;

Assignment For Published Patent Application

International Business Machines Corporation, Armonk, NY

Power of Attorney:

Joseph Redmond Jr--18753
Gerald Woods--24144
Edward Duffield--25970
John Hoel--26279
Christopher Hughes--26914
Jerry Herndon--27901
Alan Clay--32121
Gregory Doudnikoff--32847
Jeanine Ray--39808
David Irvin--42682

Domestic Priority data as claimed by applicant

This application is a CON of 10/681,409 10/08/2003 PAT 7,398,525

Foreign Applications

EUROPEAN PATENT OFFICE (EPO) 02102469.0 10/21/2002

Request to Retrieve - This application either claims priority to one or more applications filed in an intellectual property Office that participates in the Priority Document Exchange (PDX) program or contains a proper **Request to Retrieve Electronic Priority Application(s)** (PTO/SB/38 or its equivalent). Consequently, the USPTO will attempt to electronically retrieve these priority documents.

If Required, Foreign Filing License Granted: 05/28/2008

The country code and number of your priority application, to be used for filing abroad under the Paris Convention, is **US 12/113,651**

Projected Publication Date: Not Applicable

Non-Publication Request: No

Early Publication Request: No
Title

Resource scheduling in workflow management systems

Preliminary Class

718

PROTECTING YOUR INVENTION OUTSIDE THE UNITED STATES

Since the rights granted by a U.S. patent extend only throughout the territory of the United States and have no effect in a foreign country, an inventor who wishes patent protection in another country must apply for a patent in a specific country or in regional patent offices. Applicants may wish to consider the filing of an international application under the Patent Cooperation Treaty (PCT). An international (PCT) application generally has the same effect as a regular national patent application in each PCT-member country. The PCT process **simplifies** the filing of patent applications on the same invention in member countries, but **does not result** in a grant of "an international patent" and does not eliminate the need of applicants to file additional documents and fees in countries where patent protection is desired.

Almost every country has its own patent law, and a person desiring a patent in a particular country must make an application for patent in that country in accordance with its particular laws. Since the laws of many countries differ in various respects from the patent law of the United States, applicants are advised to seek guidance from specific foreign countries to ensure that patent rights are not lost prematurely.

Applicants also are advised that in the case of inventions made in the United States, the Director of the USPTO must issue a license before applicants can apply for a patent in a foreign country. The filing of a U.S. patent application serves as a request for a foreign filing license. The application's filing receipt contains further information and guidance as to the status of applicant's license for foreign filing.

Applicants may wish to consult the USPTO booklet, "General Information Concerning Patents" (specifically, the section entitled "Treaties and Foreign Patents") for more information on timeframes and deadlines for filing foreign patent applications. The guide is available either by contacting the USPTO Contact Center at 800-786-9199, or it can be viewed on the USPTO website at http://www.uspto.gov/web/offices/pac/doc/general/index.html.

For information on preventing theft of your intellectual property (patents, trademarks and copyrights), you may wish to consult the U.S. Government website, http://www.stopfakes.gov. Part of a Department of Commerce initiative, this website includes self-help "toolkits" giving innovators guidance on how to protect intellectual property in specific countries such as China, Korea and Mexico. For questions regarding patent enforcement issues, applicants may call the U.S. Government hotline at 1-866-999-HALT (1-866-999-4158).

LICENSE FOR FOREIGN FILING UNDER

Title 35, United States Code, Section 184

Title 37, Code of Federal Regulations, 5.11 & 5.15

GRANTED

The applicant has been granted a license under 35 U.S.C. 184, if the phrase "IF REQUIRED, FOREIGN FILING LICENSE GRANTED" followed by a date appears on this form. Such licenses are issued in all applications where the conditions for issuance of a license have been met, regardless of whether or not a license may be required as set forth in 37 CFR 5.15. The scope and limitations of this license are set forth in 37 CFR 5.15(a) unless an earlier license has been issued under 37 CFR 5.15(b). The license is subject to revocation upon written notification. The date indicated is the effective date of the license, unless an earlier license of similar scope has been granted under 37 CFR 5.13 or 5.14.

This license is to be retained by the licensee and may be used at any time on or after the effective date thereof unless it is revoked. This license is automatically transferred to any related applications(s) filed under 37 CFR 1.53(d). This license is not retroactive.

The grant of a license does not in any way lessen the responsibility of a licensee for the security of the subject matter as imposed by any Government contract or the provisions of existing laws relating to espionage and the national security or the export of technical data. Licensees should apprise themselves of current regulations especially with respect to certain countries, of other agencies, particularly the Office of Defense Trade Controls, Department of State (with respect to Arms, Munitions and Implements of War (22 CFR 121-128)); the Bureau of Industry and Security, Department of Commerce (15 CFR parts 730-774); the Office of Foreign AssetsControl, Department of Treasury (31 CFR Parts 500+) and the Department of Energy.

NOT GRANTED

No license under 35 U.S.C. 184 has been granted at this time, if the phrase "IF REQUIRED, FOREIGN FILING LICENSE GRANTED" DOES NOT appear on this form. Applicant may still petition for a license under 37 CFR 5.12, if a license is desired before the expiration of 6 months from the filing date of the application. If 6 months has lapsed from the filing date of this application and the licensee has not received any indication of a secrecy order under 35 U.S.C. 181, the licensee may foreign file the application pursuant to 37 CFR 5.15(b).

PATENT

IN THE UNITED STATES PATENT AND TRADEMARK OFFICE

In Application of	:	Customer Number: 46320
Frank Leymann, et al.	:	Confirmation Number: 1463
Application No.: 12/113,651	:	Group Art Unit: 3623
Filed: May 1, 2008	:	Examiner: Not yet assigned

For: RESOURCE SCHEDULING IN WORKFLOW MANAGEMENT SYSTEMS

Attorney Docket Number: DE920020010US2 (325CON)

Mail Stop Petition
Commissioner for Patents
P.O. Box 1450
Alexandria, VA 22313-1450

RENEWED PETITION TO ACCEPT UNINTENTIONALLY DELAYED

CLAIM FOR PRIORITY TO A DOMESTIC APPLICATION

UNDER 37 C.F.R. § 1.78 (a)(3)

TO THE COMMISSIONER OF PATENTS

Petitioner hereby respectfully requests the Commissioner of Patents to grant this Petition to Accept Unintentionally Delayed Claim for Priority to a Domestic Application under 37 C.F.R. § 1.78 (a)(3).

Adjustment date: 09/29/2009 CKHLOK
04/22/2009 INTERSW 00003483 12113651
01 FC:1454 -1410.00 OP

Refund Ref:
09/29/2009 0030074952

Credit Card Refund Total: $1410.00

Am Exp..: XXXXXXXXXXX3008

BACKGROUND

On May 1, 2008, Petitioner electronically filed a patent application with the United States Patent and Trademark Office (Patent Application Number 12/113,651) through the "EFS-Web" interface. Petitioner's employee, an experienced paralegal of thirty years, uploaded the requisite documents in connection with the application on behalf of Petitioner. In the course of uploading the requisite documents for the above-identified patent application, Petitioner's employee inadvertently uploaded an incorrect Application Data Sheet and an incorrect Preliminary Amendment. Petitioner's employee error in uploading the incorrect documents resulted in the uploading of the incorrect domestic priority reference, thus wrongly associating the incorrect domestic priority reference with the above-identified patent application. Additionally, the clerical error caused an unintentional delay in Petitioner's submission of the correct domestic priority reference to be associated with the above-identified patent application.

STATUTES AND REGULATIONS

Under 37 C.F.R. § 1.78 (a)(3) (MPEP 201.11), if a domestic priority reference is not timely filed with the United States Patent and Trademark Office:

> *The benefit of a prior-filed copending nonprovisional application or international application designating the United States of America may be accepted if the reference identifying the prior-filed application by application number or international application number and international filing date was unintentionally delayed.*
>
> *A petition to accept an unintentionally delayed claim under 35 U.S.C. 120, 121, or 365(c) for the benefit of a prior-filed application must be accompanied by:*

(i) The reference required by 35 U.S.C. 120 and paragraph (a)(2) of this section to the prior-filed application, unless previously submitted;

(ii) The surcharge set forth in § 1.17(t); and

(iii) A statement that the entire delay between the date the claim was due under paragraph (a)(2)(ii) of this section and the date the claim was filed was unintentional. The Director may require additional information where there is a question whether the delay was unintentional.

Additionally, MPEP 201.11 requires that:

Any petition under 37 C.F.R. 1.78 (a)(3) or (a)(6) must be accompanied by an amendment to the specifications or an ADS unless the proper reference was previously filed.

PETITION

Petitioner hereby respectfully requests the Commissioner of Patents to accept its Petition to Accept an Unintentionally Delayed Claim for Priority to a Domestic Application under 37 C.F.R. § 1.78 (a)(3).

As required by 37 C.F.R. § 1.78 (a)(3), Petitioner respectfully submits to the attention of the Commissioner the information related to the unintentionally delayed submission of the following domestic priority reference associated with Patent Application Number 12/113,651:

Continuation of U.S. Patent Application Number 10/681,409 filed on 10-08-2003

Also, as required by 37 C.F.R. § 1.78 (a)(3), Petitioner hereby states that the delay in submitting the domestic priority reference to the attention of the Commissioner was clearly unintentional. Petitioner hereby encloses payment for the surcharge fee as required by 37 C.F.R § 1.17 (t).

Finally, as required by MPEP 201.11, Petitioner hereby encloses a copy of the ADS associated with Application Number 12/113,651.

Petitioner respectfully requests the Commissioner of Patents to grant its Petition to Accept an Unintentional Delayed Claim for Priority to a Domestic Application under 37 C.F.R. § 1.78 (a)(3).

April 21, 2009

Respectfully submitted,

/Scott D. Paul/
Scott D. Paul
Registration No. 42,984
Steven M. Greenberg
Registration No. 44,725
Phone: (561) 922-3845
CUSTOMER NUMBER 46320

UNITED STATES PATENT & TRADEMARK OFFICE
Washington, D.C. 20231

REQUEST FOR PATENT FEE REFUND

1 Date of Request: 09/28/09

2 Serial/Patent # 12/113,651

	3 Please refund the following fee(s):	4 PAPER NUMBER	5 DATE FILED	6 AMOUNT
	Filing			$
	Amendment			$
	Extension of Time			$
	Notice of Appeal/Appeal			$
X	Petition 1454		04/21/09	$ 1,410.00
	Issue			$
	Cert of Correction/Terminal Disc.			$
	Maintenance			$
	Assignment			$
	Other			$

7 TOTAL AMOUNT OF REFUND $ 1,410.00

8 TO BE REFUNDED BY:

	Treasury Check
	Credit Deposit A/C #:

9 [ ][ ] -- [ ][ ][ ][ ]

10 REASON:

	Overpayment
X	Duplicate Payment
	No Fee Due (Explanation):

CREDIT CARD PAYMENT

11 REFUND REQUESTED BY:

TYPED/PRINTED NAME: Irvin Dingle TITLE: Paralegal

SIGNATURE: /Irvin Dingle/ PHONE: 2-3210

OFFICE: Petitions

****

THIS SPACE RESERVED FOR FINANCE USE ONLY:

APPROVED: CRhlak DATE: 9/29/09

Instructions for completion of this form appear on the back. After completion, attach white and yellow copies to the official file and mail or hand-carry to:

Office of Finance
Refund Branch
Crystal Park One, Room 802B

FORM PTO 1577
(01/90)

UNITED STATES PATENT AND TRADEMARK OFFICE

Commissioner for Patents
United States Patent and Trademark Office
P.O. Box 1450
• Alexandria, VA 22313-1450
www.uspto.gov

OPTIMAL INNOVATIONS, INC.
1001 West 4th St.
Winston-Salem NC 27101

MAILED

JUN 15 2010

OFFICE OF PETITIONS

In re Application of
ROLAND SCHOETTLE
Application No. 12/113,657
Filed: May 1, 2008
Attorney Docket No. **74268/P027US/10704961**

DECISION ON PETITION
TO WITHDRAW
FROM RECORD

This is a decision on the Request to Withdraw as attorney or agent of record under 37 CFR § 1.36(b), filed March 4, 2010.

The request is **NOT APPROVED**.

The request cannot be approved because the assignee "Optimal Technologies, Inc." that is listed in the request has not been made properly of record under 37 CFR 3.71. Therefore, the change of correspondence address is considered improper.

The Office will only accept correspondence address changes to the most current address information provided for the assignee of the entire interest *who properly became of record under 37 CFR 3.71.* 37 CFR 3.71(c) states:

> *An assignee becomes of record either in a national patent application or a reexamination proceeding by filing a statement in compliance with § 3.73(b) that is signed by a party who is authorized to act on behalf of the assignee.*

The assignee must establish its ownership of the patent to the satisfaction of the Director. In this regard, the statement under 37 CFR 3.73(b) must have either: (i) documentary evidence of a chain of title from the original owner to the assignee (*e.g.*, copy of an executed assignment), and a statement affirming that the documentary evidence of the chain of title from the original owner to the assignee was or concurrently is being submitted for recordation pursuant to § 3.11; or (ii) a statement specifying where documentary evidence of a chain of title from the original owner to the assignee is recorded in the assignment records of the Office (*e.g.*, reel and frame number).

All future communications from the Office will continue to be directed to the above-listed address until otherwise notified by applicant.

Telephone inquires concerning this decision should be directed to the undersigned at (571) 272-4584.

/JoAnne Burke/
JoAnne Burke
Petitions Examiner
Office of Petitions

UNITED STATES PATENT AND TRADEMARK OFFICE

Commissioner for Patents
United States Patent and Trademark Office
P.O. Box 1450
Alexandria, VA 22313-1450
www.uspto.gov

COPY MAILED

SEP 29 2009

OFFICE OF PETITIONS

NT PATENT LAW
6039 E. GRANT RD.
TUCSON, AZ 85712

In re Application of Daniel E. Snyder Application No. 12/113,679 Filed: May 1, 2008 Attorney Docket No. INVT 07.087	: : : : :	DECISION ON PETITION TO WITHDRAW FROM RECORD

This is a decision on the Request to Withdraw as attorney or agent of record under 37 C.F.R. § 1.36(b), filed September 1, 2009.

The request is **APPROVED**.

A grantable request to withdraw as attorney/agent of record must be signed by every attorney/agent seeking to withdraw or contain a clear indication that one attorney is signing on behalf of another/others. The Office will require the practitioner(s) to certify that he, she or they have: (1) given reasonable notice to the client, prior to the expiration of the reply period, which the practitioner(s) intends to withdraw from employment; (2) delivered to the client or a duly authorized representative of the client all papers and property (including funds) to which the client is entitled; and (3) notified the client of any replies that may be due and the time frame within which the client must respond, pursuant to 37 CFR 10.40 (c).

The request was signed by Quan Nguyen, on behalf of all practitioners of record who are associated with Customer Number 68702.

All attorneys/agents associated with the Customer Number 68702 have been withdrawn. Applicant is reminded that there is no attorney of record at this time.

The correspondence address of record has been changed and the new correspondence address is the address indicated below.

There is an outstanding Notice of Allowance and Fee(s) Due mailed July 28, 2009 that requires a reply from the applicant.

Telephone inquires concerning this decision should be directed to the undersigned at (571) 272-6059. All other inquires concerning either the examination or status of the application should be directed to the Technology Center.

A. Kelley

Alicia Kelley
Petitions Examiner
Office of Petitions

cc: DANIEL E. SNYDER
2104 WILDFLOWER DR.
FULLERTON, CA 92833

UNITED STATES PATENT AND TRADEMARK OFFICE

UNITED STATES DEPARTMENT OF COMMERCE
United States Patent and Trademark Office
Address: COMMISSIONER FOR PATENTS
P.O. Box 1450
Alexandria, Virginia 22313-1450
www.uspto.gov

APPLICATION NUMBER	FILING OR 371(C) DATE	FIRST NAMED APPLICANT	ATTY. DOCKET NO./TITLE
12/113,679	05/01/2008	Daniel E. Snyder	

CONFIRMATION NO. 1511

POWER OF ATTORNEY NOTICE

68702
NT Patent Law
6039 E. Grant Rd.
Tucson, AZ 85712

OC000000038021055

Date Mailed: 09/28/2009

NOTICE REGARDING CHANGE OF POWER OF ATTORNEY

This is in response to the Power of Attorney filed 09/01/2009.

- The withdrawal as attorney in this application has been accepted. Future correspondence will be mailed to the new address of record. 37 CFR 1.33.

/atkelley/

Office of Data Management, Application Assistance Unit (571) 272-4000, or (571) 272-4200, or 1-888-786-0101

UNITED STATES PATENT AND TRADEMARK OFFICE

Commissioner for Patents
United States Patent and Trademark Office
P.O. Box 1450
Alexandria, VA 22313-1450
www.uspto.gov
DIW Apr-10

DANIEL E. SNYDER
2104 WILDFLOWER DR.
FULLERTON CA 92833

MAILED
APR 13 2010
OFFICE OF PETITIONS

In re Application of	:	
Daniel E. Snyder	:	
Application Number: 12/113679	:	ON PETITION
Filing Date: 05/01/2008	:	
For: COMPUTER MOUSE CLEANING	:	
APPARATUS	:	

This is a decision on the petition under 37 CFR 1.137(b)[1] filed on February 5, 2010, to revive the above-identified application.

The petition is **GRANTED**.

The application became abandoned on October 29, 2009, for failure to timely submit the issue fee in response to the Notice of Allowance and Fee(s) mailed on July 28, 2009, which set a three (3) month statutory period for reply. Notice of Abandonment was mailed on November 11, 2009.

Receipt of the issue fee is acknowledged.

---

[1] Effective December 1, 1997, the provisions of 37 CFR 1.137(b) now provide that where the delay in reply was unintentional, a petition may be filed to revive an abandoned application or a lapsed patent pursuant to 37 CFR 1.137(b). A grantable petition filed under the provisions of 37 CFR 1.137(b) must be accompanied by:

(1) the required reply, unless previously filed. In a nonprovisional application abandoned for failure to prosecute, the required reply may be met by the filing of a continuing application. In a nonprovisional application filed on or after June 8, 1995, and abandoned for failure to prosecute, the required reply may also be met by the filing of a request for continued examination in compliance with § 1.114. In an application or patent, abandoned or lapsed for failure to pay the issue fee or any portion thereof, the required reply must be the payment of the issue fee or any outstanding balance thereof. In an application abandoned for failure to pay the publication fee, the required reply must include payment of the publication fee.

(2) the petition fee as set forth in 37 CFR 1.17(m);

(3) a statement that the entire delay in filing the required reply from the due date for the reply until the filing of a grantable petition pursuant to 37 CFR 1.137(b) was unintentional. The Director may required additional information where there is a question whether the delay was unintentional; and

(4) any terminal disclaimer (and fee as set forth in 37 CFR 1.20(d)) required pursuant to 37 CFR 1.137(c)).

The address in the petition is different from the correspondence address. A courtesy copy of this decision will be mailed to the address in the petition. All future correspondence, however, will be mailed solely to the address of record. A change of correspondence address should be filed if the correspondence address needs to be updated.

The application is referred to the Office of Data Management for processing into a patent.

Telephone inquiries concerning this matter may be directed to the undersigned at (571)272-3231.

D Wood

Douglas I. Wood
Senior Petitions Attorney
Office of Petitions

Cc: QUAN NGUYEN
6039 E. GRANT RD.
TUCSON AZ 85712

UNITED STATES PATENT AND TRADEMARK OFFICE

Commissioner for Patents
United States Patent and Trademark Office
P.O. Box 1450
Alexandria, VA 22313-1450
www.uspto.gov

OPTIMAL INNOVATIONS, INC.
1001 West 4th St.
Winston-Salem NC 27101

MAILED

JUN 15 2010

OFFICE OF PETITIONS

In re Application of
ROLAND SCHOETTLE
Application No. 12/113,754
Filed: May 1, 2008
Attorney Docket No. **742468/P028US/10704962**

DECISION ON PETITION
TO WITHDRAW
FROM RECORD

This is a decision on the Request to Withdraw as attorney or agent of record under 37 CFR § 1.36(b), filed March 4, 2010.

The request is **NOT APPROVED**.

The request cannot be approved because the assignee "Optimal Technologies, Inc." that is listed in the request has not been made properly of record under 37 CFR 3.71. Therefore, the change of correspondence address is considered improper.

The Office will only accept correspondence address changes to the most current address information provided for the assignee of the entire interest *who properly became of record under 37 CFR 3.71.* 37 CFR 3.71(c) states:

> *An assignee becomes of record either in a national patent application or a reexamination proceeding by filing a statement in compliance with § 3.73(b) that is signed by a party who is authorized to act on behalf of the assignee.*

The assignee must establish its ownership of the patent to the satisfaction of the Director. In this regard, the statement under 37 CFR 3.73(b) must have either: (i) documentary evidence of a chain of title from the original owner to the assignee (*e.g.*, copy of an executed assignment), and a statement affirming that the documentary evidence of the chain of title from the original owner to the assignee was or concurrently is being submitted for recordation pursuant to § 3.11; or (ii) a statement specifying where documentary evidence of a chain of title from the original owner to the assignee is recorded in the assignment records of the Office (*e.g.*, reel and frame number).

All future communications from the Office will continue to be directed to the above-listed address until otherwise notified by applicant.

Telephone inquires concerning this decision should be directed to the undersigned at (571) 272-4584.

/JoAnne Burke/
JoAnne Burke
Petitions Examiner
Office of Petitions

UNITED STATES PATENT AND TRADEMARK OFFICE

Commissioner for Patents
United States Patent and Trademark Office
P.O. Box 1450
Alexandria, VA 22313-1450
www.uspto.gov

WALLACE, LLC
P.O. BOX 1925
PAYSON AZ 85547

MAILED

APR 20 2009

OFFICE OF PETITIONS

Applicant: Spiker et al.
Appl. No.: 12/113,852
Filing Date: May 1, 2008
Title: METHOD AND APPARATUS FOR SECURE TRANSACTIONS
Attorney Docket No.: M-0001
Pub. No.: US 2008/0208758 A1
Pub. Date: August 28, 2007

This is a decision on the request for a corrected patent application publication under 37 CFR 1.221(b), received on October 13, 2008, for the above-identified application

The request is DISMISSED.

Applicant requests that the application be republished because the patent application publication contains material errors on the front page of the application wherein Figure 4 is printed, rather than the requested Figure 2.

37 CFR 1.221 (b) is applicable "only when the Office makes a material mistake which is apparent from Office records.... Any request for a corrected publication or revised patent application publication other than provided as provided in paragraph (a) of this section must be filed within two months from the date of the patent application publication. This period is not extendable." A material mistake must affect the public's ability to appreciate the technical disclosure of the patent application publication, to determine the scope of the patent application publication, or to determine the scope of the provisional rights that an applicant may seek to enforce upon issuance of a patent. [1]

The instant request does not identify a mistake in the publication made by the Office under 37 CFR 1.221(b) with respect to not printing the "Suggested Figure for Publication". The application was correctly published with the drawing selected for publication by the Office.

Furthermore, even if there were an error in the figure on the front page of the publication, it would not affect the understanding of the application. The mistake would not affect the public's ability to appreciate the technical disclosure of the patent application publication, or determine

[1] Changes to Implement Eighteen-Month Publication of Patent Applications, 65 FR 57023, 57038 (Sept. 20, 2000), 1239, Off. Gaz. Pat. Office Notices 63, 75 (Oct. 10, 2000) (final rule).

the scope of the patent application publication or determine the scope of the provisional rights that an applicant may seek to enforce upon issuance of a patent.

Applicant is reminded of his duty to conduct a reasonable inquiry before filing a paper before the Office. See MPEP 410.

The applicant is advised that a "request for republication of an application previously published" may be filed under 37 CFR 1.221(a). Such a request for republication "must include a copy of the application compliance with the Office's electronic filing system requirements and be accompanied by the publication fee set forth in § 1.18(d) and the processing fee set forth in § 1.17(i)." If the request for republication does not comply with the electronic filing system requirements, the republication will not take place and the publication fee set forth in § 1.18(d) will be refunded. The processing fee will be retained.

A guide for filing a request for a Pre-Grant Publication, such as a request for republication, may be found on the link below:

http://www.uspto.gov/ebc/portal/tutorials.htm

Any request for republication under 37 CFR 1.221(a), must be submitted via the EFS system, as a "Pre-Grant Publication" and questions or request for reconsideration of the decision, should be addressed as follows:

By mail to: Mail Stop PGPUB
Commissioner for Patents
P.O. Box 1450
Alexandria, Va. 22313-1450

Inquiries relating to this matter may be directed to Mark Polutta at (571) 272-7709.

Mark Polutta
Senior Legal Advisor
Office of Patent Legal Administration
Office of the Deputy Commissioner
for Patent Examination Policy

UNITED STATES PATENT AND TRADEMARK OFFICE

Commissioner for Patents
United States Patent and Trademark Office
P.O. Box 1450
Alexandria, VA 22313-1450
www.uspto.gov

COPY MAILED

DEC 16 2008

OFFICE OF PETITIONS

BARNES & THORNBURG LLP
11 SOUTH MERIDIAN
INDIANAPOLIS IN 46204

In re Application of
Whiteman et al.
Application No. 12/113,854
Filed: May 1, 2008
Attorney Docket No. CSC050

DECISION REFUSING STATUS
UNDER 37 CFR 1.47(a)

This is in response to the petition under 37 CFR 1.47(a), filed November 20, 2008.

The petition is dismissed.

Rule 47 applicant is given TWO MONTHS from the mailing date of this decision to reply, correcting the below-noted deficiencies. Any reply should be entitled "Request for Reconsideration of Petition Under 37 CFR 1.47(a)," and should only address the deficiencies noted below, except that the reply may include an oath or declaration executed by the non-signing inventor. **FAILURE TO RESPOND WILL RESULT IN ABANDONMENT OF THE APPLICATION.** Any extensions of time will be governed by 37 CFR 1.136(a).

A grantable petition under 37 CFR 1.47(a) requires: (1) proof that the non-signing inventor cannot be reached or refuses to sign the oath or declaration after having been presented with the application papers (specification, claims and drawings); (2) an acceptable oath or declaration in compliance with 35 U.S.C. §§ 115 and 116; (3) the petition fee; and (4) a statement of the last known address of the non-signing inventor. Applicant lacks items (1). as set forth above.

As to item (1), rule 47 applicant must demonstrate with documented evidence that an inventor refuses to join in the application after having been presented with the application papers (specification, claims, drawings and oath or declaration). There is no indication herein that joint inventor Bennett was presented with a copy of the complete application papers for this application. From the evidence of record, it only appears that the joint inventor was presented with a copy of the declaration and patent assignment. If the joint inventor was not presented with a copy of the application papers for this application, then the joint inventor could not attest that they have "reviewed and understand the application papers" and could not execute the declaration they were requested to sign. Did the joint inventors receive a copy of the application papers? The fact that an application may contain proprietary information does not relieve the rule 47 applicant of the responsibility to present the application papers to the joint inventors if the inventors are willing to receive the papers in order to sign the oath or declaration. Unless petitioner can show that a copy of the application papers was presented to the joint inventors , then petitioner will have to mail a copy of the complete application papers (specification, claims and drawings) to the last known address of the joint inventors , return receipt requested. A cover

letter of instructions should accompany the mailing of the application papers setting a deadline or a statement that no response will constitute a refusal. This sort of ultimatum lends support to a finding of refusal by conduct. **The proof of the pertinent events should be made by a statement of someone with firsthand knowledge of the events and should include documentary evidence, such as certified mail return receipt, cover letter of instructions, telegram, etc.** *See* MPEP 409.03(d).

Further correspondence with respect to this matter should be addressed as follows:

By mail: Mail Stop PETITIONS
Commissioner for Patents
Post Office Box 1450
Alexandria, VA 22313-1450

By hand: Customer Service Window
Mail Stop Petitions
Randolph Building
401 Dulany Street
Alexandria, VA 22314

By fax: (571) 273-8300
ATTN: Office of Petitions

Telephone inquiries should be directed to the undersigned at (571) 272-3215.

Charlema Grant
Petitions Attorney
Office of Petitions

UNITED STATES PATENT AND TRADEMARK OFFICE

Commissioner for Patents
United States Patent and Trademark Office
P.O. Box 1450
Alexandria, VA 22313-1450
www.uspto.gov

BARNES & THORNBURG LLP
11 SOUTH MERIDIAN
INDIANAPOLIS IN 46204

MAILED

MAR 03 2009

OFFICE OF PETITIONS

In re Application of	:	DECISION GRANTING STATUS
Kevin Whiteman, Dale Bennett, Jesse Talley	:	UNDER 37 CFR 1.47(a)
and Kristi Harke	:	
Application No. 12/113,854	:	
Filed: May 1, 2008	:	
Attorney Docket No. CSC050		

This is in response to the renewed petition under 37 CFR 1.47(a), filed January 21, 2009.

The petition is **GRANTED.**

Petitioner has shown that the non-signing inventor Dale Bennett has refused to join in the filing of the above-identified application.

The application and papers have been reviewed and found in compliance with 37 CFR 1.47(a). This application is hereby accorded Rule 1.47(a) status.

As provided in 37 CFR 1.47(c), this Office will forward notice of this application's filing to the non-signing inventor at the address given in the petition. Notice of the filing of this application will also be published in the Official Gazette.

This application is being referred to the Office of Patent Application Processing for pre-examination processing.

Telephone inquiries regarding this decision should be directed to the undersigned at (571) 272-3215.

Charlema Grant
Petitions Attorney
Office of Petitions

UNITED STATES PATENT AND TRADEMARK OFFICE

Commissioner for Patents
United States Patent and Trademark Office
P.O. Box 1450
Alexandria, VA 22313-1450
www.uspto.gov

Dale Bennett
3201 Cypress Village
Benton, LA 71006

In re Application of
Kevin Whiteman, Dale Bennett, Jesse Talley
and Kristi Harke
Application No. 12/113,854
Filed: May 1, 2008
Attorney Docket No. CSC050

MAILED

MAR 0 3 2009

OFFICE OF PETITIONS

Dear Mr. Bennett:

You are named as a joint inventor in the above-identified United States patent application, filed under the provisions of 35 U.S.C. 116 (United States Code), and 37 CFR 1.47(a), Rules of Practice in Patent Cases. Should a patent be granted on the application you will be designated therein as a joint inventor.

As a named inventor you are entitled to inspect any paper in the file wrapper of the application, order copies of all or any part thereof (at a prepaid cost per 37 CFR 1.19) or make your position of record in the application. Alternatively, you may arrange to do any of the preceding through a registered patent attorney or agent presenting written authorization from you. If you care to join the application, counsel of record (see below) would presumably assist you. Joining the application would entail the filing of an appropriate oath or declaration by you pursuant to 37 CFR 1.63.

Telephone inquiries regarding this communication should be directed to the undersigned at (571) 272-3215. Requests for information regarding your application should be directed to the File Information Unit at (703) 308-2733. Information regarding how to pay for and order a copy of the application, or a specific paper in the application, should be directed to the Certification Division at (571) 272-3150 or 1 (800) 972-6382 (outside the Washington, DC area).

Charlema Grant
Petitions Attorney
Office of Petitions

Cc: BARNES & THORNBURG LLP
11 SOUTH MERIDIAN
INDIANAPOLIS IN 46204

UNITED STATES PATENT AND TRADEMARK OFFICE

Commissioner for Patents
United States Patent and Trademark Office
P.O. Box 1450
Alexandria, VA 22313-1450
www.uspto.gov

Dale Bennett
3201 Cypress Village
Benton, LA 71006

In re Application of
Kevin Whiteman, Dale Bennett, Jesse Talley
and Kristi Harke
Application No. 12/113,854
Filed: May 1, 2008
Attorney Docket No. CSC050

MAILED

MAR 0 3 2009

OFFICE OF PETITIONS

Dear Mr. Bennett:

You are named as a joint inventor in the above-identified United States patent application, filed under the provisions of 35 U.S.C. 116 (United States Code), and 37 CFR 1.47(a), Rules of Practice in Patent Cases. Should a patent be granted on the application you will be designated therein as a joint inventor.

As a named inventor you are entitled to inspect any paper in the file wrapper of the application, order copies of all or any part thereof (at a prepaid cost per 37 CFR 1.19) or make your position of record in the application. Alternatively, you may arrange to do any of the preceding through a registered patent attorney or agent presenting written authorization from you. If you care to join the application, counsel of record (see below) would presumably assist you. Joining the application would entail the filing of an appropriate oath or declaration by you pursuant to 37 CFR 1.63.

Telephone inquiries regarding this communication should be directed to the undersigned at (571) 272-3215. Requests for information regarding your application should be directed to the File Information Unit at (703) 308-2733. Information regarding how to pay for and order a copy of the application, or a specific paper in the application, should be directed to the Certification Division at (571) 272-3150 or 1 (800) 972-6382 (outside the Washington, DC area).

Charlema Grant
Petitions Attorney
Office of Petitions

Cc: BARNES & THORNBURG LLP
11 SOUTH MERIDIAN
INDIANAPOLIS IN 46204

UNITED STATES PATENT AND TRADEMARK OFFICE

Commissioner for Patents
United States Patent and Trademark Office
P.O. Box 1450
Alexandria, VA 22313-1450
www.uspto.gov

SHELL OIL COMPANY
C/O JAMES D. CARRUTH
P O BOX 2463
HOUSTON TX 77252-2463

MAILED

JUL 29 2009

OFFICE OF PETITIONS

In re Application of	:	
Ruth Mary Kowalseski, et al.	:	
Application No. 12/113,871	:	ON PETITION
Filed: May 1, 2008	:	
Attorney Docket No. TH3268 (US)	:	

This is a decision on the petition under 37 CFR 1.137(b), filed May 26, 2009, to revive the above-identified application.

The petition is **GRANTED**.

The application became abandoned for failure to reply in a timely manner to the Notice to File Missing Parts of Nonprovisional Application (Notice), mailed June 17, 2008. The Notice set a period for reply of two (2) months from the mail date of the Notice. No extensions of time under the provisions of 37 CFR 1.136(a) was obtained. Accordingly, the application became abandoned on August 18, 2008. The Notice of Abandonment was mailed February 19, 2009.

The petition satisfies the requirements of 37 CFR 1.137(b) in that petitioner has supplied (1) the reply in the form of an oath and $130 surcharge; (2) the petition fee of $1,620; and (3) an adequate statement of unintentional delay.

37 CFR 1.137(b)(3) requires a statement that "the entire delay in filing the required reply from the due date for the reply until the filing of a grantable petition pursuant to 37 CFR 1.137(b) was unintentional." Since the statement appearing in the petition varies from the language required by 37 CFR 1.137(b)(3), the statement is being construed as the required statement. Petitioner must notify the Office if this is not a correct reading of the statement appearing in the petition.

Telephone inquiries concerning this decision should be directed to the undersigned at (571) 272-2991.

The application file is being referred to the Office of Patent Application Processing for further processing.

Terri Williams

Terri Williams
Petitions Examiner
Office of Petitions

UNITED STATES PATENT AND TRADEMARK OFFICE

Commissioner for Patents
United States Patent and Trademark Office
P.O. Box 1450
Alexandria, VA 22313-1450
www.uspto.gov

JACKSON & CO., LLP
6114 LA SALLE AVENUE
#507
OAKLAND CA 94611-2802

MAILED

MAY 10 2010

OFFICE OF PETITIONS

In re Application of :
Say et al. :
Application No. 12/113,907 :
Filing: May 1, 2008 :
Attorney Docket No. TS-02-26C19 :

ON PETITION

This is a decision on the petition under 37 CFR 1.102(c)(1), filed March 17, 2010, to make the above-identified application special based on applicant's age as set forth in M.P.E.P. § 708.02, Section IV.

The petition is **GRANTED**.

A grantable petition to make an application special under 37 CFR 1.102(c)(1) and MPEP § 708.02, Section IV: Applicant's Age must be accompanied by evidence showing that at least one of the applicants is 65 years of age, or more, such as a birth certificate or a statement by applicant. No fee is required.

The instant petition includes a statement (PTO/SB/130 form) by the applicant's attorney that the applicant is 65 years of age. Accordingly, the above-identified application has been accorded "special" status.

Telephone inquiries concerning this decision should be directed to the undersigned at 571-272-6059. All other inquiries concerning either the examination or status of the application should be directed to the Technology Center.

A. Kelley

Alicia Kelley
Petitions Examiner
Office of Petitions

UNITED STATES PATENT AND TRADEMARK OFFICE

Commissioner for Patents
United States Patent and Trademark Office
P.O. Box 1450
Alexandria, VA 22313-1450
www.uspto.gov

MAILED

JAN 19 2010

OFFICE OF PETITIONS

BULLIVANT HOUSER BAILEY PC
1415 L STREET
SUITE 1000
SACRAMENTO CA 95814

In re Application of	:	
SCORVO, Sean	:	DECISION ON PETITION
Application No. 12/113,936	:	TO MAKE SPECIAL UNDER
Filed: May 1, 2008	:	THE GREEN TECHNOLOGY
Attorney Docket No. 31003/00005	:	PILOT PROGRAM

This is a decision on the petition under 37 CFR 1.102, filed December 10, 2009, to make the above-identified application special under the pilot program for applications pertaining to Green Technologies as set forth in 74 Federal Register Notice 64666 (December 8, 2009).

The petition is **DISMISSED**.

If reconsideration of this decision is desired, a petition for reconsideration must be filed within ONE (1) MONTH OR THIRTY (30) DAYS from the mail date of this decision, whichever is longer. No extension of this time limit can be granted under 37 CFR 1.136(a) or (b). The petition for reconsideration should include an exhaustive attempt to provide the lacking item(s) noted below, since, after a decision on the petition for reconsideration, no further reconsideration or review of the matter will be undertaken by the Director.

A grantable petition to make an application special under 37 CFR 1.102 and the pilot program as set forth in 74 FR 64666 must be directed to a nonprovisional application filed under 35 USC 111(a) or be a national stage entry under 35 USC 371, exclusive of any reissue applications and be filed prior to the date of the notice, December 8, 2009.

In order to qualify for special status, the following requirements must be met. 1) The application must be classified in one of the eligible US classifications listed in section VI of the notice. 2) The application must have no more than 3 independent claims and no more than 20 total claims. 3) The application must not contain any multiple dependent claims. 4) The petition must state the basis for seeking special status, i.e., the claimed invention either: A) materially enhances the quality of the environment or B) materially contributes to: i) the discovery or development of renewable energy resources, ii) the more efficient utilization and conservation of energy resources, or iii) greenhouse gas emission reduction. 5) If the disclosure is not clear on its face that the claimed invention materially contributes under category (A) or (B), the petition must be accompanied by a statement by the applicant, assignee, or an attorney/agent registered to practice

before the Office explaining how the materiality standard is met. 6) A statement that applicant will agree to make an election without traverse in a telephonic interview if a restriction requirement is made by the examiner. 7) The petition to make special must be filed electronically. 8) The petition must be filed at least one day prior to the date that a first Office Action appears in the Patent Application Information Retrieval (PAIR) system. 9) The petition must be accompanied by a request for early publication in compliance with 37 CFR 1.219 and include the publication fee as set forth in 37 CFR 1.18(d).

The requirement for a fee for consideration of the petition to make special for applications pertaining to Green Technologies has been waived.

Petitioner's arguments in regard to the fee for early publication have been noted. However, both a request for early publication in compliance with 37 CFR 1.219 and the publication fee as set forth in 37 CFR 1.18(d) are required in order to qualify for special status under the Green Technology Pilot program. See item 9 above. As authorized, the fee of $300 required under 37 CFR 1.18(d), has been charged to the Deposit Account 50-1577.

The petition lacks items 1 and 5 as discussed in more detail below.

In regard to item 1, this application has been classified (USPC 4/287) in an area that is not one of the eligible US classifications listed in section VI of the Notice. Therefore, this application is not eligible for the Pilot Program. The classification limitations are purposefully made to be narrow for the Pilot Program; however, these may be expanded based upon the success of the Pilot Program. Petitioner may file a preliminary amendment that would cause this application to be classified else where. However, while petitioner may suggest a classification (see, e.g., MPEP 708.02(a)(VII)(C)), the application will be assigned to the most appropriate classification based upon current U.S. classification guidelines. Therefore, while it is noted that on the bottom of page 2 and top of page 3 of the "STATEMENT OF SPECIAL STATUS", Applicants have suggested that the present application could appropriately be classified under USPC 210/710 which is a class/subclass that is one of the eligible US classifications listed in section VI of the Notice, the current classification of the application is USPC 4/287. Furthermore, a petition for the Pilot Program should not be filed until and unless all of the requirements set forth in the Notice are met; i.e., a petition should not be filed for an application that is currently classified outside the eligible classifications set forth in the Notice.

In regard to item 5, it is noted that the petition includes a statement explaining how the instant application materially contributes to category (A). More particularly, petitioner states that "the invention . . . materially enhances the quality of the environment by contributing to the maintenance of one of the basic life-sustaining natural elements, i.e., water." The instant invention is directed to a "MANUALLY OPERABLE DRAIN DEVICE." Petitioner's argument is that the invention's device for handling solid material, such as hair, would reduce clogging of household sink, tub, and shower drains and thus, eliminate "all need for the harsh, environmentally unfriendly chemicals previously used to unclog drains. The elimination of such chemicals is of great value to the environment because it maintains water quality and reduces water pollution." Petitioner should note that any potential enhancement/maintenance of water quality and reduction of water pollution depends upon how an end user might use the instant invention. It is highly speculative that the present invention would eliminate <u>ALL</u> need for chemical drain cleaners. As stated in the Notice, the materiality standard does not permit an

applicant to speculate as to how a hypothetical end-user might specially apply the invention in a manner that could materially contribute to category (A) or (B). *Also see MPEP § 708.02(V).* Accordingly, it is unclear as to how the claimed invention would materially contribute to category (A) or (B).

Further correspondence with respect to this matter should be addressed as follows:

By Mail: Mail Stop PETITION
Commissioner for Patents
P. O. Box 1450
Alexandria, VA 22313-1450

By hand: U. S. Patent and Trademark Office
Customer Service Window, Mail Stop Petitions
Randolph Building
401 Dulany Street
Alexandria, VA 22314

By FAX: (571) 273-8300

Telephone inquiries concerning this decision should be directed to Gay Ann Spahn at 571-272-8011.

All other inquiries concerning either the examination or status of the application should be directed to the Technology Center.

The application is being forwarded to the Technology Center Art Unit 3751 for action in its regular turn.

Ramesh Krishnamurthy

Ramesh Krishnamurthy
Petitions Examiner
Office of Petitions

UNITED STATES PATENT AND TRADEMARK OFFICE

UNITED STATES DEPARTMENT OF COMMERCE
United States Patent and Trademark Office
Address: COMMISSIONER FOR PATENTS
P.O. Box 1450
Alexandria, Virginia 22313-1450
www.uspto.gov

Kenneth C. Spafford
708 Smithson Avenue
Erie, PA 16511

Mail Date: 04/21/2010

Applicant	: Anthony ANTHONY	: DECISION ON REQUEST FOR
Patent Number	: 7593208	: RECALCULATION of PATENT
Issue Date	: 09/22/2009	: TERM ADJUSTMENT IN VIEW
Appliction No	: 12/113,988	: OF WYETH AND NOTICE OF INTENT TO
Filed	: 05/02/2008	: ISSUE CERTIFICATE OF CORRECTION
		:

The Request for Recalculation is **GRANTED** to the extent indicated.

The patent term adjustment has been determined to be **0** days. The USPTO will *sua sponte* issue a certificate of correction reflecting the amount of PTA days determined by the recalculation.

Prior to the issuance of the certificate of correction, the USPTO will afford patentee an opportunity to be heard and request reconsideration. Accordingly, patentee has **one month or thirty (30) days**, whichever is longer, to file a request for reconsideration of this patent term adjustment calculation. See 35 U.S.C. 154(b)(3)(B)(ii) and 37 CFR 1.322(a)(4). No extensions of time will be granted under 37 CFR 1.136.

Patentee should use document code PET.OP if electronically filing a request for reconsideration of this patent term adjustment calculation. The patentee must also include the information required by 37 CFR 1.705(b)(2) and the fee required by 37 CFR 1.18(e). If patentee does not file a timely request for reconsideration of this patent term adjustment calculation including the information required by 37 CFR 1.705(b)(2) and the fee required by 37 CFR 1.18(e), the USPTO will issue a certificate of correction reflecting the PTA determination noted above.

Patentee should be aware that in order to preserve the right to review in the United States District Court for the District of Columbia of the USPTO patent term adjustment determination, patentee must ensure that he or she also take the steps required under 35 U.S.C. 154(b)(4)(A) in a timely manner. Nothing in the request for recalculation should be construed as providing an alternative time frame for commencing a civil action under 35 U.S.C. 154(b)(4)(A).

Any questions concerning this decision should be directed to the Office of Patent Legal Administration at 571-272-7702.

UNITED STATES PATENT AND TRADEMARK OFFICE

Commissioner for Patents
United States Patent and Trademark Office
P.O. Box 1450
Alexandria, VA 22313-1450
www.uspto.gov

TEXAS INSTRUMENTS INCORPORATED
P O BOX 655474, M/S 3999
DALLAS TX 75265

MAILED

JUN 24 2009

OFFICE OF PETITIONS

In re Application of	:	
Shinichi Tanaka	:	
Application No. 12/114,021	:	DECISION ON PETITION
Filed: May 2, 2008	:	
Attorney Docket No. TI-64251	:	

This is a decision on the petition under the unintentional provisions of 37 CFR 1.137(b), filed March 6, 2009, to revive the above-identified application.

The petition is **GRANTED**.

The application became abandoned for failure to reply in a timely manner to the Notice to File Missing Parts of Nonprovisional Application (Notice), mailed May 22, 2008. The Notice set a period for reply of two (2) months from the mail date of the Notice. No extensions of time under the provisions of 37 CFR 1.136(a) were obtained. Accordingly, the application became abandoned on July 23, 2008. A Notice of Abandonment was mailed January 30, 2009.

The petition satisfies the requirements of 37 CFR 1.137(b) in that petitioner has supplied (1) the reply in the form of an Oath/Declaration and the $130.00 surcharge fee, (2) the petition fee of $1,620.00, and (3) a proper statement of unintentional delay.

Telephone inquiries concerning this decision should be directed to Joan Olszewski at (571) 272-7751.

This matter is being referred to the Office of Patent Application Processing for further processing in accordance with this decision on petition.

/Liana Walsh/
Liana Walsh
Petitioner Examiner
Office of Petitions

UNITED STATES PATENT AND TRADEMARK OFFICE

Commissioner for Patents
United States Patent and Trademark Office
P.O. Box 1450
Alexandria, VA 22313-1450
www.uspto.gov

ANTHONY S. KEWITSCH
2118 WILSHIRE BLVD.
#1001
SANTA MONICA CA 90403

COPY MAILED

SEP 2 4 2009

OFFICE OF PETITIONS

In re Application of
Kewitsch
Application No. 12/114,117
Filed/Deposited: 2 May, 2008
Attorney Docket No. PA050208

DECISION

This is a decision on the petition filed on 24 August, 2009, considered as a petition under 37 C.F.R. §1.181 (no fee) requesting withdrawal of the holding of abandonment in the above-identified application.

The petition as considered under 37 C.F.R. §1.181 is **DISMISSED**.

This is **not** a final agency action within the meaning of 5 U.S.C. §704.

Any further petition to revive must be submitted within TWO (2) MONTHS from the mail date of this decision. Extensions of time under 37 C.F.R. §1.136(a) are permitted. The reconsideration request should include a cover letter entitled "Renewed Petition under 37 C.F.R. §1.181 to Withdraw the Holding of Abandonment." *In the alternative, Petitioner may properly file a petition to the Commissioner under 37 C.F.R. §1.137(b) requesting revival of an application abandoned due to unintentional delay.*

As to the Request to Withdraw
the Holding of Abandonment

Petitioners always are directed to the Commentary at MPEP §711.03(c)(I) for guidance as to the proper showing and timeliness and showing requirements for relief under 37 C.F.R. §1.181.

BACKGROUND

The record reflects as follows:

Petitioner failed to reply timely and properly to the Requirement for Restriction mailed on 13 January, 2009, with reply due absent extension of time on or before 13 February, 2009.

The application went abandoned by operation of law after midnight 13 February, 2009.

It does not appear that the Office mailed the Notice of Abandonment before the instant petition was filed.

On 24 August, 2009, Petitioner filed a petition pursuant to 37 C.F.R. §1.181 and averred timely filing of a reply on 3 February, 2009, in the form of an Election and recitation by Petitioner of the presence of a first class mail, U.S. Postal Service (USPS) transmittal—however, the record does not evidence Petitioner's demonstration of submission of the reply pursuant to a certificate of mail (*see*: 37 C.F.R. §1.8), with a date-stamped receipt card (MPEP §503), consistent with the showing requirements under the rule. On any renewed petition, Petitioner must address this deficiency.

Petitioner's burden is to make a showing pursuant to 37 C.F.R. §1.181 (with narrative and documentary support) consistent with the guidance in the Commentary at MPEP 711.03(c)(I), which provides in pertinent part:

***

> 37 C.F.R. §1.10(c) through §1.10(e) and §1.10(g) set forth procedures for petitioning the Director of the USPTO to accord a filing date to correspondence as of the date of deposit of the correspondence as "Express Mail." A petition to withdraw the holding of abandonment relying upon a timely reply placed in "Express Mail" must include an appropriate petition under 37 C.F.R. §1.10(c), (d), (e), or (g) (see MPEP §513). When a paper is shown to have been mailed to the Office using the "Express Mail" procedures, the paper must be entered in PALM with the "Express Mail" date.
>
> Similarly, applicants may establish that a reply was filed with a postcard receipt that properly identifies the reply and provides *prima facie* evidence that the reply was timely filed. See MPEP §503. For example, if the application has been held abandoned for failure to file a reply to a first Office action, and applicant has a postcard receipt showing that an amendment was timely filed in response to the Office action, then the holding of abandonment should be withdrawn upon the filing of a petition to withdraw the holding of abandonment. When the reply is shown to have been timely filed based on a postcard receipt, the reply must be entered into PALM using the date of receipt of the reply as shown on the post card receipt.
>
> Where a certificate of mailing under 37 C.F.R. §1.8, but not a postcard receipt, is relied upon in a petition to withdraw the holding of abandonment, see 37 C.F.R. §1.8(b) and MPEP §512. As stated in 37 C.F.R. §1.8(b)(3) the statement that attests to the previous timely mailing or transmission of the correspondence must be on a personal knowledge basis, or to the satisfaction of the Director of the USPTO. If the statement attesting to the

> previous timely mailing is not made by the person who signed the Certificate of Mailing (i.e., there is no personal knowledge basis), then the statement attesting to the previous timely mailing should include evidence that supports the conclusion that the correspondence was actually mailed (e.g., copies of a mailing log establishing that correspondence was mailed for that application). When the correspondence is shown to have been timely filed based on a certificate of mailing, the correspondence is entered into PALM with the actual date of receipt (i.e., the date that the duplicate copy of the papers was filed with the statement under 37 C.F.R. §1.8).
>
> 37 C.F.R. §1.8(b) also permits applicant to notify the Office of a previous mailing or transmission of correspondence and submit a statement under 37 C.F.R. §1.8(b)(3) accompanied by a duplicate copy of the correspondence when a reasonable amount of time (e.g., more than one month) has elapsed from the time of mailing or transmitting of the correspondence. Applicant does not have to wait until the application becomes abandoned before notifying the Office of the previous mailing or transmission of the correspondence. Applicant should check the private Patent Application Information Retrieval (PAIR) system for the status of the correspondence before notifying the Office. See MPEP §512. [1]

***

As indicated above, Petitioner failed to satisfy this burden.

Petitioner failed to satisfy the requirements set forth in the guidance in the Commentary at MPEP §711.03(c)(I), which is the requirement for relief pursuant to 37 C.F.R. §1.181.

Petitioner's alternative is to properly file a petition to the Commissioner requesting revival of an application abandoned due to unintentional delay pursuant to 37 C.F.R. §1.137(b).

Out of an abundance of caution, Petitioners always are reminded that the filing of a petition under 37 C.F.R. §1.181 does not toll any periods that may be running any action by the Office and a petition seeking relief under the regulation must be filed within two (2) months of the act complained of (*see*: 37 C.F.R. §1.181(f)), and those registered to practice and all others who make representations before the Office are reminded to inquire into the underlying facts of representations made to the Office and support averments with the appropriate documentation– since all owe to the Office the continuing duty to disclose.[2]

The availability of applications and application papers online to applicants/practitioners who diligently associate their Customer Number with the respective application(s) now provides an applicant/practitioner on-demand information as to events/transactions in an application.

---

[1] *See*: MPEP §711.03(c) (I)(B).

[2] See supplement of 17 June, 1999. The Patent and Trademark Office is relying on Petitioner's duty of candor and good faith and accepting a statement made by Petitioner. See Changes to Patent Practice and Procedure, 62 Fed. Reg. at 53160 and 53178, 1203 Off. Gaz. Pat. Office at 88 and 103 (responses to comments 64 and 109)(applicant obligated under 37 C.F.R. §10.18 to inquire into the underlying facts and circumstances when providing statements to the Patent and Trademark Office).

STATUTES, REGULATIONS

Congress has authorized the Commissioner to "revive an application if the delay is shown to the satisfaction of the Commissioner to have been "unavoidable." 35 U.S.C. §133 (1994). And the regulations at 37 C.F.R. §1.137(a) and (b) set forth the requirements for a Petitioner to revive a previously unavoidably or unintentionally, respectively, abandoned application.[3],[4]

Moreover, the Office has set forth in the Commentary at MPEP §711.03(c)(I) the showing and timeliness requirements for a proper showing for relief under 37 C.F.R. §1.181 in these matters.

Decisions on reviving abandoned applications on the basis of "unavoidable" delay have adopted the reasonably prudent person standard in determining if the delay was unavoidable:

> The word 'unavoidable' . . . is applicable to ordinary human affairs, and requires no more or greater care or diligence than is generally used and observed by prudent and careful men in relation to their most important business. It permits them in the exercise of this care to rely upon the ordinary and trustworthy agencies of mail and telegraph, worthy and reliable employees, and such other means and instrumentalities as are usually employed in such important business. If unexpectedly, or through the unforeseen fault or imperfection of these agencies and instrumentalities, there occurs a failure, it may properly be said to be unavoidable, all other conditions of promptness in its rectification being present.[5]

Allegations as to the Request to Withdraw the Holding of Abandonment

The guidance in the Commentary at MPEP §711.03(c)(I) specifies the showing required and how and when it is to be made and supported.

---

[3] See: Changes to Patent Practice and Procedure; Final Rule Notice, 62 Fed. Reg. at 53158-59 (October 10, 1997), 1203 Off. Gaz. Pat. Office at 86-87 (October 21, 1997).

[4] The language of 35 U.S.C. §133 and 37 C.F.R. §1.137(a) is clear, unambiguous, and without qualification: the delay in tendering the reply to the outstanding Office action, as well as filing the first petition seeking revival, must have been unavoidable for the reply now to be accepted on petition. (Therefore, by example, an unavoidable delay in the payment of the Filing Fee might occur if a reply is shipped by the US Postal Service, but due to catastrophic accident, the delivery is not made.) Delays in responding properly raise the question whether delays are unavoidable. Where there is a question whether the delay was unavoidable, Petitioners must meet the burden of establishing that the delay was unavoidable within the meaning of 35 U.S.C. §133 and 37 C.F.R. §1.137(a) And the Petitioner must be diligent in attending to the matter. Failure to do so does not constitute the care required under Pratt, and so cannot satisfy the test for diligence and due care. (By contrast, unintentional delays are those that do not satisfy the very strict statutory and regulatory requirements of unavoidable delay, and also, by definition, are not intentional.))

[5] In re Mattullath, 38 App. D.C. 497, 514-15 (1912)(quoting Ex parte Pratt, 1887 Dec. Comm'r Pat. 31, 32-33 (1887)); see also Winkler v. Ladd, 221 F. Supp. 550, 552, 138 USPQ 666, 167-68 (D.D.C. 1963), aff'd, 143 USPQ 172 (D.C. Cir. 1963); Ex parte Henrich, 1913 Dec. Comm'r Pat. 139, 141 (1913). In addition, decisions on revival are made on a "case-by-case basis, taking all the facts and circumstances into account." Smith v. Mossinghoff, 671 F.2d 533, 538, 213 USPQ 977, 982 (D.C. Cir. 1982). Finally, a petition cannot be granted where a petitioner has failed to meet his or her burden of establishing that the delay was "unavoidable." Haines v. Quigg, 673 F. Supp. 314, 316-17, 5 USPQ2d 1130, 1131-32 (N.D. Ind. 1987).

Petitioner appears not to have made the showing required.

CONCLUSION

Accordingly, the petition as considered under 37 C.F.R. §1.181 is **dismissed**.

ALTERNATIVE VENUE

Should Petitioner wish to revive the application, Petitioner may wish to properly file a petition to the Commissioner requesting revival of an application abandoned due to unintentional delay under 37 C.F.R. §1.137(b). (See: http://www.uspto.gov/web/offices/pac/mpep/documents/0700_711_03_c.htm#sect711.03c)

A petition to revive on the grounds of unintentional delay must be filed promptly and such petition must be accompanied by the reply, the petition fee, a statement that "the entire delay in filing the required reply from the due date for the reply until the filing of a grantable petition was unintentional" (the statement is in the form available online), and a terminal disclaimer and fee where appropriate.

Further correspondence with respect to this matter should be addressed as follows:

By Mail: Mail Stop PETITION
Commissioner for Patents
P. O. Box 1450
Alexandria, VA 22313-1450

By hand: U. S. Patent and Trademark Office
Customer Service Window, Mail Stop Petitions
Randolph Building
401 Dulany Street
Alexandria, VA 22314

By facsimile: **(571) 273-8300**
Attn: Office of Petitions

Telephone inquiries regarding this decision may be directed to the undersigned at (571) 272-3214—it is noted, however, that all practice before the Office is in writing (see: 37 C.F.R. §1.2[6]) and the proper authority for action on any matter in this regard are the statutes (35 U.S.C.), regulations (37 C.F.R.) and the commentary on policy (MPEP). Therefore, no telephone discussion may be controlling or considered authority for Petitioner's action(s).

/John J. Gillon, Jr./
John J. Gillon, Jr.
Senior Attorney
Office of Petitions

[6] The regulations at 37 C.F.R. §1.2 provide:
§1.2 Business to be transacted in writing.
All business with the Patent and Trademark Office should be transacted in writing. The personal attendance of applicants or their attorneys or agents at the Patent and Trademark Office is unnecessary. The action of the Patent and Trademark Office will be based exclusively on the written record in the Office. No attention will be paid to any alleged oral promise, stipulation, or understanding in relation to which there is disagreement or doubt.

UNITED STATES PATENT AND TRADEMARK OFFICE

Commissioner for Patents
United States Patent and Trademark Office
P.O. Box 1450
Alexandria, VA 22313-1450
www.uspto.gov

COPY MAILED

DEC 1 0 2009

OFFICE OF PETITIONS

ANTHONY S. KEWITSCH
2118 WILSHIRE BLVD/#1001
SANTA MONICA CA 90403

In re Application of	:	
Kewitsch	:	
Application No. 12/114,117	:	DECISION
Filed/Deposited: 2 May, 2008	:	
Attorney Docket No. PA050208	:	

This is a decision on the petition filed on 29 September, 2009, for revival of an application abandoned due to unintentional delay under 37 C.F.R. §1.137(b).

The petition under 37 C.F.R. §1.137(b) is **GRANTED**.

As to the Allegations
of Unintentional Delay

The requirements of a grantable petition pursuant to 37 C.F.R. §1.137(b) are the petition and fee therefor, a reply, a proper statement of unintentional delay under the regulation, and, where applicable, a terminal disclaimer and fee. (However, it does not appear that a terminal disclaimer and fee are due here.)

Petitioners' attentions always are directed to the guidance in the Commentary at MPEP §711.03(c)(II).

BACKGROUND

The record reflects as follows:

Petitioner failed to reply timely and properly to the Requirement for Restriction mailed on 13 January, 2009, with reply due absent extension of time on or before 13 February, 2009.

The application went abandoned by operation of law after midnight 13 February, 2009.

It does not appear that the Office mailed the Notice of Abandonment before the instant petition was filed.

On 24 August, 2009, Petitioner filed a petition pursuant to 37 C.F.R. §1.181 and averred timely filing of a reply on 3 February, 2009, in the form of an Election and recitation by Petitioner of the presence of a first class mail, U.S. Postal Service (USPS) transmittal—however, the record does not evidence Petitioner's demonstration of submission of the reply pursuant to a certificate of mail (*see*: 37 C.F.R. §1.8), with a date-stamped receipt card (MPEP §503), consistent with the showing requirements under the rule. The petition was dismissed on 24 September, 2009.

On 29 September, 2009, Petitioner filed, *inter alia*, a petition (with fee) pursuant to 37 C.F.R. §1.137(b), a reply in the form of an Election (and previously filed), and made the statement of unintentional delay.

Again, Petitioners' attentions always are directed to the guidance in the Commentary at MPEP §711.03(c)(II).

The availability of applications and application papers online to applicants/practitioners who diligently associate their Customer Number with the respective application(s) now provides an applicant/practitioner on-demand information as to events/transactions in an application.

Out of an abundance of caution, Petitioners always are reminded that those registered to practice and all others who make representations before the Office **must** inquire into the underlying facts of representations made to the Office and support averments with the appropriate documentation–since all owe to the Office the continuing duty to disclose.[1]

STATUTES, REGULATIONS AND ANALYSIS

Congress has authorized the Commissioner to "revive an application if the delay is shown to the satisfaction of the Commissioner to have been "unavoidable." 35 U.S.C. §133 (1994).[2]
The regulations at 37 C.F.R. §1.137(a) and (b) set forth the requirements for a Petitioner to revive a previously unavoidably or unintentionally, respectively, abandoned application under this congressional grant of authority.

Unintentional delays are those that do not satisfy the very strict statutory and regulatory requirements of unavoidable delay, and also, by definition, are not intentional.[3]))

---

[1] See supplement of 17 June, 1999. The Patent and Trademark Office is relying on petitioner's duty of candor and good faith and accepting a statement made by Petitioner. See Changes to Patent Practice and Procedure, 62 Fed. Reg. at 53160 and 53178, 1203 Off. Gaz. Pat. Office at 88 and 103 (responses to comments 64 and 109)(applicant obligated under 37 C.F.R. §10.18 to inquire into the underlying facts and circumstances when providing statements to the Patent and Trademark Office).

[2] 35 U.S.C. §133 provides:

35 U.S.C. §133 Time for prosecuting application.

Upon failure of the applicant to prosecute the application within six months after any action therein, of which notice has been given or mailed to the applicant, or within such shorter time, not less than thirty days, as fixed by the Commissioner in such action, the application shall be regarded as abandoned by the parties thereto, unless it be shown to the satisfaction of the Commissioner that such delay was unavoidable.

As to Allegations of
Unintentional Delay

The requirements of a grantable petition pursuant to 37 C.F.R. §1.137(b) are the petition and fee therefor, a reply, a proper statement of unintentional delay under the regulation, and, where applicable, a terminal disclaimer and fee.

It appears that the requirements under 37 C.F.R. §1.137(b) have been satisfied.

CONCLUSION

Accordingly, the petition under 37 C.F.R. §1.137(b) is **granted**.

The instant application is released to the Technology Center/AU 2883 for further processing in due course.

Petitioner may find it beneficial to view Private PAIR within a fortnight of the instant decision to ensure that the revival has been acknowledged by the TC/AU in response to this decision. It is noted that all inquiries with regard to that change in status need be directed to the TC/AU where that change of status must be effected—that does not occur in the Office of Petitions.

Telephone inquiries regarding this decision may be directed to the undersigned at (571) 272-3214—it is noted, however, that all practice before the Office is in writing (see: 37 C.F.R. §1.2[4]) and the proper authority for action on any matter in this regard are the statutes (35 U.S.C.), regulations (37 C.F.R.) and the commentary on policy (MPEP). Therefore, no telephone discussion may be controlling or considered authority for Petitioner's action(s).

/John J. Gillon, Jr./
John J. Gillon, Jr.
Senior Attorney
Office of Petitions

---

[3] Therefore, by example, an unintentional delay in the reply might occur if the reply and transmittal form are to be prepared for shipment by the US Postal Service, but other pressing matters distract one's attention and the mail is not timely deposited for shipment.

[4] The regulations at 37 C.F.R. §1.2 provide:

§1.2 Business to be transacted in writing.

All business with the Patent and Trademark Office should be transacted in writing. The personal attendance of applicants or their attorneys or agents at the Patent and Trademark Office is unnecessary. The action of the Patent and Trademark Office will be based exclusively on the written record in the Office. No attention will be paid to any alleged oral promise, stipulation, or understanding in relation to which there is disagreement or doubt.

UNITED STATES PATENT AND TRADEMARK OFFICE

UNITED STATES DEPARTMENT OF COMMERCE
United States Patent and Trademark Office
Address: COMMISSIONER FOR PATENTS
P.O. Box 1450
Alexandria, Virginia 22313-1450
www.uspto.gov

WELLS ST. JOHN P.S.
601 W. FIRST AVENUE, SUITE 1300
SPOKANE, WA 99201

Mail Date: 04/21/2010

Applicant	: Kevin Shea	: DECISION ON REQUEST FOR
Patent Number	: 7618874	: RECALCULATION of PATENT
Issue Date	: 11/17/2009	: TERM ADJUSTMENT IN VIEW
Appliction No	: 12/114,124	: OF WYETH AND NOTICE OF INTENT TO
Filed	: 05/02/2008	: ISSUE CERTIFICATE OF CORRECTION
		:

The Request for Recalculation is **GRANTED** to the extent indicated.

The patent term adjustment has been determined to be **0** days. The USPTO will *sua sponte* issue a certificate of correction reflecting the amount of PTA days determined by the recalculation.

Prior to the issuance of the certificate of correction, the USPTO will afford patentee an opportunity to be heard and request reconsideration. Accordingly, patentee has **one month or thirty (30) days**, whichever is longer, to file a request for reconsideration of this patent term adjustment calculation. See 35 U.S.C. 154(b)(3)(B)(ii) and 37 CFR 1.322(a)(4). No extensions of time will be granted under 37 CFR 1.136.

Patentee should use document code PET.OP if electronically filing a request for reconsideration of this patent term adjustment calculation. The patentee must also include the information required by 37 CFR 1.705(b)(2) and the fee required by 37 CFR 1.18(e). If patentee does not file a timely request for reconsideration of this patent term adjustment calculation including the information required by 37 CFR 1.705(b)(2) and the fee required by 37 CFR 1.18(e), the USPTO will issue a certificate of correction reflecting the PTA determination noted above.

Patentee should be aware that in order to preserve the right to review in the United States District Court for the District of Columbia of the USPTO patent term adjustment determination, patentee must ensure that he or she also take the steps required under 35 U.S.C. 154(b)(4)(A) in a timely manner. Nothing in the request for recalculation should be construed as providing an alternative time frame for commencing a civil action under 35 U.S.C. 154(b)(4)(A).

Any questions concerning this decision should be directed to the Office of Patent Legal Administration at 571-272-7702.

UNITED STATES PATENT AND TRADEMARK OFFICE

Commissioner for Patents
United States Patent and Trademark Office
P.O. Box 1450
Alexandria, VA 22313-1450
www.uspto.gov

COPY MAILED

JUN 19 2008

OFFICE OF PETITIONS

LEWIS AND ROCA LLP
1663 HWY 395, SUITE 201
MINDEN NV 89423

In re Application of	:	
Chan, et al.	:	DECISION ON PETITION
Application No. 12/114,143	:	
Filed: 2 May, 2008	:	
Attorney Docket No. ACT-233COA	:	

This is a decision on the petition under ¶(a) of 37 C.F.R. §1.47, filed on 2 May, 2008, and partially supplemented on or about 16 June, 2008.

> **NOTE**: Concurrently with the filing of the instant application it appears that Petitioner sought to submit evidence of Rule 47 status having been granted previously in the parent of this matter. However, while the parent is Application No. 09/069,054, the assignment and the petition for Rule 47 status were inappropriately filed in Application No. 09/096,054 (the assignment on 17 August, 1998 (and recorded on that date at reel/frame 009404/0862), and the petition on 20 August, 1998)—the latter and incorrect application. However, corrective measures by the Office resulted in the petition being granted in the proper application—to wit: Application No. 09/069,054 on 20 November, 2007.

Petitioner has shown that the non-signing inventor Chi Fung Chen (Mr. Chen) has refused to join in the filing of the above-identified application or cannot be located after an attempt has been made to present to them the application papers.

Petitioner—in the parent Application No. 09/069,054, of which this division--evidenced that while all other inventors signed the oath/declaration, the non-signing inventor Mr. Chen failed to join in the filing of the above-identified application after having been presented with the application papers.

Office records indicate that the assignment for the instant application were submitted for recordation on or about 16 June, 2008, with the reel/frame data still unavailable at this writing.

Petitioner submitted a declaration in compliance with 37 C.F.R. §1.63 and §1.64, and has shown that such action is necessary to prevent irreparable damage. Status previously was accorded therein under 37 C.F.R. §1.47(a) in the decision of 20 November, 2007.

This application and papers have been reviewed and found in compliance with 37 C.F.R. §1.47(a).

The availability of applications and application papers online to applicants/practitioners who diligently associate their Customer Number with the respective application(s) now provides an applicant/practitioner on-demand information as to events/transactions in an application. Thus, now if one wishes to know the progress in and/or status of an application or the accuracy of the data therein, one need only look at the file online.

Out of an abundance of caution, Petitioners always are reminded that those registered to practice *and* all others who make representations before the Office must inquire into the underlying facts of representations made to the Office and support averments with the appropriate documentation–since all owe to the Office the continuing duty to disclose.[1]

This application hereby is **ACCORDED status under 37 C.F.R. §1.47(a)**.

Pursuant to the commentary at MPEP §201.06(c)(VI), because: the non-signing inventor previously was forwarded at the address given therein of Notice of the parent application's filing; and Notice of the filing also was published in the Official Gazette, there will be no further Notice or publication thereof.

[1] See supplement of 17 June, 1999. The Patent and Trademark Office is relying on petitioner's duty of candor and good faith and accepting a statement made by Petitioner. See Changes to Patent Practice and Procedure, 62 Fed. Reg. at 53160 and 53178, 1203 Off. Gaz. Pat. Office at 88 and 103 (responses to comments 64 and 109)(applicant obligated under 37 C.F.R. §10.18 to inquire into the underlying facts and circumstances when providing statements to the Patent and Trademark Office). See specifically, the regulations at 37 C.F.R. §10.18.

This file is released to the Office of Initial Patent Examination, (OPAP) (formerly the Office of Initial Patent Examination (OIPE)) for further processing in due course.

While telephone inquiries regarding this decision may be directed to the undersigned at (571) 272-3214, it is noted that all practice before the Office is in writing (see: 37 C.F.R. §1.2[2]) and the proper authority for action on any matter in this regard are the statutes (35 U.S.C.), regulations (37 C.F.R.) and the commentary on policy (MPEP). Therefore, no telephone discussion may be controlling or considered authority for Petitioner's action(s).

/John J. Gillon, Jr./
John J. Gillon, Jr.
Senior Attorney
Office of Petitions

---

[2] The regulations at 37 C.F.R. §1.2 provide:

§1.2 Business to be transacted in writing.

All business with the Patent and Trademark Office should be transacted in writing. The personal attendance of applicants or their attorneys or agents at the Patent and Trademark Office is unnecessary. The action of the Patent and Trademark Office will be based exclusively on the written record in the Office. No attention will be paid to any alleged oral promise, stipulation, or understanding in relation to which there is disagreement or doubt.

UNITED STATES PATENT AND TRADEMARK OFFICE

Commissioner for Patents
United States Patent and Trademark Office
P.O. Box 1450
Alexandria, VA 22313-1450
www.uspto.gov

SIERRA PATENT GROUP, LTD.
1657 HWY 395, SUITE 202
MINDEN, NV 89423

COPY MAILED

NOV 20 2007

OFFICE OF PETITIONS

In re Application of
King W. Chan et al
Application No. 09/069,054
Filed: April 28, 1998
Attorney Docket No. ACT-233

DECISION ON PETITION

This is in response to the petition under 37 CFR 1.47(a), filed August 20, 1998.[1]

The petition is **GRANTED.**

Petitioner has shown that the non-signing inventor, Mr. Chi Fung Cheng has refused to join in the filing of the above-identified application.

The application and papers have been reviewed and found in compliance with 37 CFR 1.47(a). This application is hereby accorded Rule 1.47(a) status.

As provided in 37 CFR 1.47(c), this Office will forward notice of this application's filing to the non-signing inventor at the address given in the petition. Notice of the filing of this application will also be published in the Official Gazette.

This application is currently before Publishing Division for processing into a patent.

Telephone inquiries regarding this decision should be directed to the undersigned at (571) 272-3218.

Frances Hicks
Petitions Examiner
Office of Petitions

[1] The existence of this petition was only recently brought to the attention of the deciding official's office. Any inconvenience caused petitioner by the delay in acting on this petition is sincerely regretted.

OIPE JC3
AUG 2 0 1998
PATENT & TRADEMARK OFFICE

ACT-233

IN THE UNITED STATES PATENT AND TRADEMARK OFFICE

In re Application of:	) Art Unit:
King W. Chan, William Chiu Ting Shu, Sinan Kaptanoglu and Chi-Fung Cheng	) Examiner:
Serial No. ~~09/096,054~~ wrong Serial # 09/069,054	
Filed: April 29, 1998	
For: DEDICATED INTERFACE ARCHITECTURE FOR A HYBRID INTEGRATED CIRCUIT	

RECEIVED
98 SEP -1 AM 10: 57
TECHNOLOGY CENTER 3600

CERTIFICATE OF MAILING
I hereby certify that this correspondence is being deposited with the United States Postal Service with sufficient postage as First Class Mail, in an envelope addressed to:
Assistant Commissioner for Patents
Washington, D.C. 20231

on 8-17-98
Date

Tara Hayden

PETITION FOR ACCEPTANCE OF DECLARATION WHERE AN INVENTOR CANNOT BE FOUND UNDER 37 C.F.R. 1.47

RECEIVED
98 SEP 1 PM 12:40 AM 8: 14
TECHNOLOGY CENTER 3600
RECEIVED
GROUP 1300

Honorable Assistant Commissioner
for Patents
Washington, D.C. 20231

Dear Sir:

A partially completed declaration accompanies this petition. The declaration is missing Mr. Chi-Fung Cheng's signature. Mr. Cheng is one of four inventors in the above entitled application. A diligent effort was made to contact Mr. Cheng, including attempts to mail and telephone Mr. Cheng at his last known address: 3079 Florence Park

Dr., San Jose, CA 95135.

An affidavit completed by Tara Hayden accompanies this petition. The affidavit outlines the steps that were taken by Ms. Hayden to locate Mr. Cheng and the results of those efforts. Accordingly, it is respectfully requested that the Patent and Trademark Office accept the declaration under 37 C.F.R. § 1.47, which provides for such circumstances.

Respectfully submitted,
D'ALESSANDRO & RITCHIE

Dated: August 17, 1998

By_____
Marc S. Hanish
Reg. No. P42,626

D'Alessandro & Ritchie
P.O. Box 640640
San Jose, CA 95164-0640
(408) 441-1100

OIPE JC3
AUG 2 0 1998
PATENT & TRADEMARK OFFICE

Docket No. ACT-233

RECEIVED
98 SEP 11 PM 2:40
TECHNOLOGY CENTER 3600

IN THE UNITED STATES PATENT AND TRADEMARK OFFICE

In re Application of:	Art Unit:
King W. Chan, William Chiu Ting Shu, Sinan Kaptanoglu and Chi Fung Cheng	Examiner:
Serial No. 09/096,054	
Filed: April 29, 1998	
For: DEDICATED INTERFACE ARCHITECTURE FOR A HYBRID INTEGRATED CIRCUIT	

RECEIVED
98 SEP -1 AM 10:57
TECHNOLOGY CENTER 3600

AFFIDAVIT OF TARA HAYDEN

I, Tara Hayden, do hereby declare that:

1. I am employed by D'Alessandro & Ritchie, located at 1731 Technology Drive, Suite 700, San Jose, California 95110.

2. I am the person responsible for filing responses to requests to file missing parts. In the course of my job, I contact inventors and obtain their signatures on documents as necessary.

98 NOV -6 AM 8:4
RECEIVED
GROUP 1300

3. On May 19, 1998, a Declaration and Assignment were sent to Mr. Chi Fung Cheng for his signature. A copy of the cover letter is attached as Exhibit A. In addition, I called Mr. Cheng on July 7, 1998 and left a message reminding him that he needed to sign the Assignment and Declaration and send it to me as soon as possible as we had a due date of July 18, 1998. Since July 7, 1998, I again called him on July 28, 1998, August 4, 1998, August 11, 1998, and August 13, 1998 and left a message

on his answering machine because I still had not received the signed documents. As of the date of this affidavit, he has not returned the documents to this office.

4. To the best of my knowledge, I believe that Mr. Cheng is unavailable to sign the declaration. All attempts to contact him and apprise him of the situation have been unsuccessful.

I further declare that all statements made herein of my own knowledge are true and that all statements made upon information and belief are believed to be true; and further that these statements were made with the knowledge that willful false statements and the like so made are punishable by fine or imprisonment, or both, under Section 1001 of Title 18 of the United States Code, and that such willful false statements may jeopardize the validity of the application or any patent issuing thereon.

Dated: August 17, 1998

Tara Hayden
Secretary

98 NOV -6 AM 8: 14
RECEIVED
GROUP 1300

D'ALESSANDRO & RITCHIE
A PROFESSIONAL CORPORATION

ATTORNEYS AT LAW

1731 TECHNOLOGY DRIVE
SUITE 700
SAN JOSE, CALIFORNIA 95110

MAILING ADDRESS:
P.O. BOX 640640
SAN JOSE, CALIFORNIA 95164-0640

TELEPHONE: (408) 441-1100
FACSIMILE: (408) 441-8400

WRITER'S EMAIL ADDRESS: MICHELLE@D-R.COM

KENNETH D'ALESSANDRO*
DAVID B. RITCHIE*

JONATHAN H. SCHAFER
STEPHEN R. URIARTE
STEVEN J. ROBBINS
SEAN P. LEWIS
JAMES C. EDWARDS
MARC S. HANISH
POWELL L. SPRUNGER

*ADMITTED IN CALIFORNIA AND NEVADA

OIPE JC3
AUG 20 1998
PATENT & TRADEMARK OFFICE

RECEIVED
SEP -1 AM 10: 57
TECH CENTER 3600

May 19, 1998

Mr. Lawrence Chi Fung Cheng
3079 Florence Park Drive
San Jose, CA 95135

re: United States Patent Application entitled, "Dedicated Interface Architecture for a Hybrid Integrated Circuit"
Inventors: Chan, et al.
Serial No.: 09/069,054
Filed: April 28, 1998
D&R Docket No.: ACT-233

Dear Mr. Cheng:

Pursuant to our telephone conversation of today, I enclose herewith the Declaration and the Assignment for this pending U.S. patent application. I also enclose a copy of the application as it was filed for your records.

The Declaration sets forth your statement that you are an original inventor of the device for which a patent is being sought, and that you believe it constitutes a new idea which has not been previously set forth in the industry. Please sign and date it on the line specified for "Inventor 4" and return it to us for filing with the Patent Office.

The Assignment document transfers all of your right, title and interest in and to the application and any patent which may be issued to Actel Corporation. Please note that this document must be signed in the presence of a Notary Public. If you do not have access to a Notary Public, you may come to our office during normal business hours and I will be happy to notarize the document for you free of charge. Our office is located off Guadalupe Parkway, right across the street from the San Jose Airport, and we are open Monday through Friday, 8:30 a.m. to 5:30 p.m. If you plan to come by, please telephone first and let me know when I may expect you.

RECEIVED
NOV -6 AM 8: 14
GROUP 1300

If you have any questions regarding these documents, please feel free to call.

Very truly yours,

Michelle Leicester
Assistant

/ml
encls.

UNITED STATES PATENT AND TRADEMARK OFFICE

Commissioner for Patents
United States Patent and Trademark Office
P.O. Box 1450
Alexandria, VA 22313-1450
www.uspto.gov

GIBSON & DERNIER L.L.P.
900 ROUTE 9 NORTH
SUITE 504
WOODBRIDGE, NJ 07095

COPY MAILED

JAN 04 2010

In re Application of	:	
Fedok et al.	:	DECISION ON PETITION
Application No. 12/114,153	:	TO WITHDRAW
Filed: May 2, 2008	:	FROM RECORD
Attorney Docket No. 758-003	:	

This is a decision on the Request to Withdraw as attorney or agent of record under 37 C.F.R. § 1.36(b), filed November 2, 2009.

The request is **NOT APPROVED** because it is moot.

A review of the file record indicates that on December 29, 2009 the power of attorney to Gibson & Dernier L.L.P. was revoked by the assignee of the patent application. Accordingly, the request to withdraw under 37 C.F.R. § 1.36(b) is moot.

All future communications from the Office will be directed to the below-listed address until otherwise notified by applicant.

Telephone inquires concerning this decision should be directed to the undersigned at 571-272- 7751. All other inquires concerning either the examination or status of the application should be directed to the Technology Center.

Joan Olszewski
Petitions Examiner
Office of Petitions

cc: Kaplan Gilman & Pergament LLP
1480 Route 9 North
Woodbridge NJ 07095

UNITED STATES PATENT AND TRADEMARK OFFICE

Commissioner for Patents
United States Patent and Trademark Office
P.O. Box 1450
Alexandria, VA 22313-1450
www.uspto.gov

COOLEY GODWARD KRONISH LLP
ATTN: PATENT GROUP
SUITE 1100
777 - 6TH STREET, NW
WASHINGTON DC 20001

COPY MAILED

AUG 1 8 2008

In re Application of	:	
KRUMME, John F. et al.	:	
Application No. 12/114,194	:	DECISION ON PETITION
Filed: May 02, 2008	:	TO MAKE SPECIAL UNDER
Attorney Docket No. **AEST-002/05US 308954-2004**	:	37 CFR 1.102(c)(1)
	:	

This is a decision on the petition under 37 CFR 1.102(c)(1), filed July 28, 2008, to make the above-identified application special based on applicant's age as set forth in M.P.E.P. § 708.02, Section IV.

The petition is **GRANTED**.

A grantable petition to make an application special under 37 CFR 1.102(c)(1) and MPEP § 708.02, Section IV: Applicant's Age must be accompanied by evidence showing that at least one of the applicants is 65 years of age, or more, such as a birth certificate or a statement by applicant. No fee is required

The instant petition includes a copy of John Krumme's passport, attesting to his age. Accordingly, the above-identified application will be accorded "special" status.

Telephone inquiries concerning this decision should be directed to Tredelle Jackson at 571-272-2783.

All other inquiries concerning either the examination or status of the application should be directed to the Technology Center.

This application is being referred to the Office of Initial Patent Examination for processing.
This application will be accorded "special" status when pre-examination processing is done.

Tredelle D. Jackson
Paralegal Specialist
Office of Petitions

UNITED STATES PATENT AND TRADEMARK OFFICE

Commissioner for Patents
United States Patent and Trademark Office
P.O. Box 1450
Alexandria, VA 22313-1450
www.uspto.gov

FOLEY & LARDNER LLP
P.O. BOX 80278
SAN DIEGO CA 92138-0278

MAILED

JUN 3 0 2010

OFFICE OF PETITIONS

In re Application of	:	
HOFMANN, Ray	:	
Application No. 12/114,210	:	DECISION ON PETITION
Filed: May 02, 2008	:	TO WITHDRAW
Attorney Docket No. **095016-0103**	:	FROM RECORD

This is a decision on the Request to Withdraw as attorney or agent of record under 37 C.F.R. § 1.36(b), filed May 19, 2010.

The request is **NOT APPROVED**.

A grantable request to withdraw as attorney/agent of record must be signed by every attorney/agent seeking to withdraw or contain a clear indication that one attorney is signing on behalf of another/others. The Office requires the practitioner(s) requesting withdrawal to certify that he, she, or they have: (1) given reasonable notice to the client, prior to the expiration of the response period, that the practitioner(s) intends to withdraw from employment; (2) delivered to the client or a duly authorized representative of the client all papers and property (including funds) to which the client is entitled; and (3) notified the client of any responses that may be due and the time frame within which the client must respond, pursuant 37 CFR 10.40(c).

The request cannot be approved because there is no indication that act one (1) noted in the above-identified certifications has been performed.

All future communications from the Office will continue to be directed to the above-listed address until otherwise notified by applicant.

Telephone inquiries concerning this decision should be directed to Michelle R. Eason at 571-272- 4231.

Michelle R. Eason
Paralegal Specialist
Office of Petitions

UNITED STATES PATENT AND TRADEMARK OFFICE

Commissioner for Patents
United States Patent and Trademark Office
P.O. Box 1450
Alexandria, VA 22313-1450
www.uspto.gov

JAN 0 5 2010

CROWELL & MORING LLP
INTELLECTUAL PROPERTY GROUP
P.O. BOX 14300
WASHINGTON, DC 20044-4300

In re Application of Roland Klement et al. Application No. 12/114,224 Filed: May 2, 2008 For: BRAKE LINING ASSEMBLY	: : : : : :	DECISION ON PETITION REGARDING REQUEST TO WITHDRAWAL FINALITY UNDER 37 CFR §1.181

This is a decision on applicants' petition under 37 CFR 1.181 filed December 7, 2009 requesting withdrawal of the finality of the Office action mailed August 6, 2009.

The petition is **GRANTED.**

Petitioner argues that the "new rejection of claim 16 under 35 U.S.C. § 112, second paragraph, concerns language present in claim 16 of the application as originally filed, and was not necessitated by any claim amendment."

A review of the file record reveals that claim 16, as originally filed, recites "a T attachment on the lining carrier or on the holding spring." In the non-final Office action mailed November 26, 2008, the examiner did not reject claim 16 under 35 U.S.C. § 112, second paragraph, as being indefinite. In response to the non-final Office action, applicant amends claim 16; however, the amendment does not pertain to the "T attachment." As pointed out by petitioner, in the final rejection mailed August 6, 2009, the examiner then rejects claim 16 under 35 U.S.C § 112, second paragraph, because the recitation pertaining to the T attachment renders the claim indefinite.

MPEP 706.07(a) sets forth that the second or any subsequent action on the merits shall be made final except where the examiner introduces a new ground of rejection that is neither necessitated by applicant's amendment nor based on information submitted in an information disclosure statement filed during the period set forth in 37 CFR 1.97(c) with the fee set forth in 37 CFR 1.17(p).

The rejection of claim 16 in the final Office action was not necessitated by amendment, since the recitation of the T attachment, which the examiner considers to render the claim indefinite, is present in the claim as originally filed. Therefore, the finality of the August 6, 2009 Office action is premature.

Accordingly, the finality of the Office action mailed August 6, 2009, but not the action itself, is hereby withdrawn. The Office action mailed August 6, 2009 is now considered to be non-final and the shortened statutory period for response continues to run THREE (3) MONTHS from the date of the mailing of the Office action.

Filed concurrently with the petition is a response to the August 6, 2009 Office action. The application will be forwarded to the Head Supervisory Legal Instruments Examiner for removal of the "final" status from the August 6, 2009 action and for entry of the December 7, 2009 amendment and then to the examiner for consideration of the amendment. However, if the amendment raises a new ground of rejection, the next Office action will be made FINAL.

Summary: The petition is **GRANTED.**

Questions concerning this decision should be referred to Teri Luu, Quality Assurance Specialist, at (571) 272-7045.

Frederick Schmidt, Director
Patent Technology Center 3600
Telephone No.: (571)-272-5150

tl: 12/16/09

UNITED STATES PATENT AND TRADEMARK OFFICE

Commissioner for Patents
United States Patent and Trademark Office
P.O. Box 1450
Alexandria, VA 22313-1450
www.uspto.gov

LACKENBACH SIEGEL, LLP
LACKENBACH SIEGEL BUILDING
1 CHASE ROAD
SCARSDALE NY 10583

NOV 04 2008

In re Application of: DE, HUANG YUAN Serial No.: 12/114,234 Filed: May 02, 2008 Title: RETRACTABLE UTILITY KNIFE	:	DECISION ON PETITION TO MAKE SPECIAL FOR NEW APPLICATION UNDER 37 C.F.R. § 1.102 & M.P.E.P. § 708.02

This is a decision on the petition filed on October 23, 2008 to make the above-identified application special for accelerated examination procedure under 37 C.F.R. § 1.102(d).

The petition to make the application special is **DENIED**.

REGULATION AND PRACTICE

To be eligible for accelerated examination under 37 C.F.R. § 1.102(d), applications and petitions must be filed pursuant to the "Change to Practice for Petitions in Patent Applications to Make Special and for Accelerated Examination" published in the Federal Register on June 26, 2006, (71 Fed. Reg. 36323), effective August 25, 2006. The filing is missing, *inter alia*, a pre-examination search document, an Accelerated Examination Support Document, and form PTO/SB/28.

The petition appears on its face to have been filed without recognition of the August 25, 2006 policy change to the petition to make special program. The changes to the program are substantial. A copy of Federal Register of June 26, 2006 (71 Fed. Reg. 36323) is being attached to the mailed decision for petitioner's review. Notably, special status based upon categories such as manufacture, infringement, environmental quality, conservation of energy resources, recombinant DNA, superconductivity materials, HIV/AIDS and cancer, countering terrorism, and biotechnology applications filed by small entities are no longer available (see in above cited notice, p. 36324, col. 1, l. 47 to col. 2, l. 5). Further guidance may be found at www.USPTO.gov under the accelerated examination link.

For the above-stated reasons, the petition is **DENIED**. The application will therefore be taken up by the examiner for action in its regular turn.

Any inquiry regarding this decision should be directed to Ehud Gartenberg, TC 3700 Special Program Examiner, at (571) 272-4828.

Ehud Gartenberg

Ehud Gartenberg
Special Program Examiner
Technology Center 3700
Encl. "Change to Practice for Petitions in Patent Applications to Make Special and for Accelerated Examination" published in the Federal Register on June 26, 2006 (71 Fed. Reg. 36323).

(2) Activities will be initiated before dusk;

(3) Construction noises must be kept constant (i.e., not interrupted by periods of quiet in excess of 30 minutes) while pinnipeds are present;

(4) If activities cease for longer than 30 minutes and pinnipeds are in the area, start-up of activities will include a gradual increase in noise levels;

(5) A NMFS-approved marine mammal observer will visually monitor the pinnipeds on the beach adjacent to the harbor and on rocks for any flushing or other behaviors as a result of Boeing's activities (see Monitoring); and

(6) To the extent possible, the *Delta Mariner* and accompanying vessels will enter the harbor only when the tide is too high for harbor seals to haul-out on the rocks. The vessel will reduce speed 1.5 to 2 knots (2.8–3.7 km/hr) once the vessel is within 3 mi (4.83 km) of the harbor. The vessel will enter the harbor stern first, approaching the wharf and mooring dolphins at less than 0.75 knot (1.4 km/hr).

Monitoring

As part of its 2002 application, Boeing provided a proposed monitoring plan for assessing impacts to harbor seals from the activities at south VAFB harbor and for determining when mitigation measures should be employed. NMFS proposes the same plan for this IHA.

A NMFS-approved and VAFB-designated biologically trained observer will monitor the area for pinnipeds during all harbor activities. During nighttime activities, the harbor area will be illuminated, and the monitor will use a night vision scope. Monitoring activities will consist of:

(1) Conducting baseline observation of pinnipeds in the project area prior to initiating project activities;

(2) Conducting and recording observations on pinnipeds in the vicinity of the harbor for the duration of the activity occurring when tides are low enough for pinnipeds to haul out (2 ft, 0.61 m, or less); and

(3) Conducting post-construction observations of pinniped haul-outs in the project area to determine whether animals disturbed by the project activities return to the haul-out.

Monitoring results from previous years of these activities have been reviewed and incorporated into the analysis of potential effects in this document, as well as the take estimates.

Reporting

Boeing will notify NMFS 2 weeks prior to initiation of each activity. After each activity is completed, Boeing will provide a report to NMFS within 90 days. This report will provide dates and locations of specific activities, details of seal behavioral observations, and estimates of the amount and nature of all takes of seals by harassment or in other ways. In addition, the report will include information on the weather, the tidal state, the horizontal visibility, and the composition (species, gender, and age class) and locations of haul-out group(s). In the unanticipated event that any marine mammal is injured or killed as a result of these activities, Boeing or its designee shall report the incident to NMFS immediately.

Endangered Species Act

This action will not affect species listed under the Endangered Species Act (ESA) that are under the jurisdiction of NMFS. VAFB formally consulted with U.S. Fish and Wildlife Service (FWS) in 1998 on the possible take of southern sea otters during Boeing's harbor activities at south VAFB. A Biological Opinion was issued in August 2001, which concluded that the proposed activities were not likely to jeopardize the continued existence of the southern sea otter. The activities covered by this IHA are analyzed in that Biological Opinion, and this IHA does not modify the action in a manner that was not previously analyzed.

National Environmental Policy Act

In 2001, the USAF prepared an Environmental Assessment (EA) for Harbor Activities Associated with the Delta IV Program at Vandenberg Air Force Base. In 2005, NMFS prepared an EA supplementing the information contained in the USAF EA and issued a Finding of No Significant Impact (FONSI) on the issuance of an IHA for Boeing's harbor activities in accordance with section 6.01 of the National Oceanic and Atmospheric Administration Administrative Order (NAO) 216–6 (Environmental Review Procedures for Implementing the National Environmental Policy Act, May 20, 1999). The proposed activity is within the scope of NMFS'2005 EA and FONSI.

Conclusions

NMFS has issued an IHA to Boeing for harbor activities related to the Delta IV/EELV to take place at south VAFB over a 1-year period, contingent upon adherence to the previously mentioned mitigation, monitoring, and reporting requirements. NMFS has determined that the impact of harbor activities related to the Delta IV/EELV at VAFB (transport vessel operations, cargo movement activities, harbor maintenance dredging, and kelp habitat mitigation) will result in the Level B Harassment of small numbers of Pacific harbor seals, California sea lions, and northern elephant seals. The effects of Boeing's harbor activities are expected to be in the form of short-term and localized behavioral changes and no take by injury or death is anticipated or authorized. NMFS has further determined that these takes will have a negligible impact on the affected marine mammal species and stocks and will not have an unmitigable adverse impact on the availability of such marine mammal species and stocks for subsistence uses.

Authorization

NMFS has issued an IHA to take marine mammals, by Level B harassment, incidental to conducting harbor activities at VAFB to Boeing for a 1-year period, provided the mitigation, monitoring, and reporting requirements are undertaken.

Dated: June 19, 2006.

James H. Lecky,

Director, Office of Protected Resources, National Marine Fisheries Service.

[FR Doc. E6–10044 Filed 6–23–06; 8:45 am]

BILLING CODE 3510–22–S

DEPARTMENT OF COMMERCE

Patent and Trademark Office

[Docket No.: PTO–P–2006–0014]

Changes to Practice for Petitions in Patent Applications To Make Special and for Accelerated Examination

AGENCY: United States Patent and Trademark Office, Commerce.

ACTION: Notice.

SUMMARY: The United States Patent and Trademark Office (USPTO) has established procedures under which the examination of a patent application may be accelerated. Under one of these procedures, the USPTO will advance an application out of turn for examination if the applicant files a grantable petition to make special under the accelerated examination program. The USPTO is revising its procedures for applications made special under the accelerated examination program with the goal of completing examination within twelve months of the filing date of the application. The USPTO is similarly revising the procedures for other petitions to make special, except those based on applicant's health or age or the recently announced Patent Prosecution Highway (PPH) pilot program between the USPTO and the Japan Patent Office.

DATES: *Effective Date:* The change in practice in this notice applies to

petitions to make special filed on or after August 25, 2006.

FOR FURTHER INFORMATION CONTACT: Pinchus Laufer, Detailee, Office of Patent Legal Administration, Office of the Deputy Commissioner for Patent Examination Policy, by telephone at (571) 272–7726, or by facsimile at (571) 273–7726. Comments concerning petition to make special practice may be sent by electronic mail message over the Internet addressed to *MPEPFeedback@uspto.gov*, or submitted by mail addressed to: Mail Stop Comments—Patents, Commissioner for Patents, P.O. Box 1450, Alexandria, VA, 22313–1450.

Any inquiries concerning electronic filing of the application should be directed to the Electronic Business Center (EBC) at (866) 217–9197. Any inquiries concerning a specific petition to make special should be directed to the appropriate Technology Center Special Program Examiner.

SUPPLEMENTARY INFORMATION: New patent applications are normally taken up for examination in the order of their United States filing date. The USPTO has a procedure for requesting accelerated examination under which an application will be advanced out of turn for examination if the applicant files a petition to make special with the appropriate showing. *See* 37 CFR 1.102 and *Manual of Patent Examining Procedure* § 708.02 (VIII) (8th ed. 2001) (Rev. 3, August 2005) (MPEP). The USPTO is revising its procedures for applications made special under the accelerated examination program with the goal of completing examination within twelve months of the filing date of the application. *See* Part VIII (subsection The Twelve-Month Goal) for more information.

The USPTO is similarly revising the procedures for other petitions to make special, except those based on applicant's health or age or the PPH pilot program. Specifically, other petitions to make special (*i.e.*, petitions based on: manufacture, infringement, environmental quality, energy, recombinant DNA, superconductivity materials, HIV/AIDS and cancer, countering terrorism, and biotechnology applications filed by small entities (*see* MPEP § 708.02)) will be processed and examined using the revised procedure for accelerated examination. Thus, all petitions to make special, except those based on applicant's health or age or the PPH pilot program, will be required to comply with the requirements of petitions to make special under the accelerated examination program that are set forth in this notice.

Any petition to make special, other than those based on applicant's health or age or the PPH pilot program, filed on or after the effective date must meet the requirements set forth in this notice. Applications filed before the effective date will not be eligible for the revised accelerated examination program. Until the effective date, applicant may file a petition to make special in an application filed before the effective date by complying with the previous guidelines and requirements in MPEP § 708.02 (I–II, and V–XII). A petition to make special filed after the effective date will only be granted if it is based upon applicant's health or age or is under the PPH pilot program, or if it complies with the requirements set forth in this notice. See Part VIII, for more information on eligibility.

Part I. Requirements for Petitions to Make Special under Accelerated Examination: A new application may be granted accelerated examination status under the following conditions:

(1) The application must be filed with a petition to make special under the accelerated examination program accompanied by either the fee set forth in 37 CFR 1.17(h) or a statement that the claimed subject matter is directed to environmental quality, energy, or countering terrorism. *See* 37 CFR 1.102(c)(2). Applicant should use form PTO/SB/28 for filing the petition.

(2) The application must be a non-reissue utility or design application filed under 35 U.S.C. 111(a).

(3) The application, petition, and required fees must be filed electronically using the USPTO's electronic filing system (EFS), or EFS-Web. If the USPTO's EFS and EFS-Web are not available to the public during the normal business hours for these systems at the time of filing the application, applicant may file the application, other papers and fees by mail accompanied by a statement that EFS and EFS-Web were not available during the normal business hours, but the final disposition of the application may occur later than twelve months from the filing of the application. *See* Part VIII (subsection The Twelve-Month Goal) for more information.

(4) At the time of filing, the application must be complete under 37 CFR 1.51 and in condition for examination. For example, the application must be filed together with the basic filing fee, search fee, examination fee, and application size fee (if applicable), and an executed oath or declaration under 37 CFR 1.63. *See* Part VIII (subsection Conditions for Examination) for more information.

(5) The application must contain three or fewer independent claims and twenty or fewer total claims. The application must also not contain any multiple dependent claims. By filing a petition to make special under the accelerated examination program the applicant is agreeing not to separately argue the patentability of any dependent claim during any appeal in the application. Specifically, the applicant is agreeing that the dependent claims will be grouped together with and not argued separately from the independent claim from which they depend in any appeal brief filed in the application (37 CFR 41.37(c)(1)(vii)). The petition must include a statement that applicant will agree not to separately argue the patentability of any dependent claim during any appeal in the application. See form PTO/SB/28.

(6) The claims must be directed to a single invention. If the USPTO determines that all the claims presented are not directed to a single invention, applicant must make an election without traverse in a telephonic interview. The petition must include a statement that applicant will agree to make an election without traverse in a telephonic interview. See form PTO/SB/28.

(7) The applicant must be willing to have an interview (including an interview before a first Office action) to discuss the prior art and any potential rejections or objections with the intention of clarifying and possibly resolving all issues with respect to patentability at that time. The petition must include a statement that applicant will agree to have such an interview when requested by the examiner. See form PTO/SB/28.

(8) At the time of filing, applicant must provide a statement that a preexamination search was conducted, including an identification of the field of search by United States class and subclass and the date of the search, where applicable, and for database searches, the search logic or chemical structure or sequence used as a query, the name of the file or files searched and the database service, and the date of the search.

(A) This preexamination search must involve U.S. patents and patent application publications, foreign patent documents, and non-patent literature, unless the applicant can justify with reasonable certainty that no references more pertinent than those already identified are likely to be found in the eliminated source and includes such a justification with this statement.

(B) This preexamination search must be directed to the claimed invention and

encompass all of the features of the claims, giving the claims the broadest reasonable interpretation.

(C) The preexamination search must also encompass the disclosed features that may be claimed. An amendment to the claims (including any new claim) that is not encompassed by the preexamination search or an updated accelerated examination support document (*see* item 9) will be treated as not fully responsive and will not be entered. *See* Part IV (Reply by Applicant) for more information.

(D) A search report from a foreign patent office will not satisfy this preexamination search requirement unless the search report satisfies the requirements set forth in this notice for a preexamination search.

(E) Any statement in support of a petition to make special must be based on a good faith belief that the preexamination search was conducted in compliance with these requirements. *See* 37 CFR 1.56 and 10.18.

(9) At the time of filing, applicant must provide in support of the petition an accelerated examination support document.

(A) An accelerated examination support document must include an information disclosure statement (IDS) in compliance with 37 CFR 1.98 citing each reference deemed most closely related to the subject matter of each of the claims.

(B) For each reference cited, the accelerated examination support document must include an identification of all the limitations in the claims that are disclosed by the reference specifying where the limitation is disclosed in the cited reference.

(C) The accelerated examination support document must include a detailed explanation of how each of the claims are patentable over the references cited with the particularity required by 37 CFR 1.111(b) and (c).

(D) The accelerated examination support document must include a concise statement of the utility of the invention as defined in each of the independent claims (unless the application is a design application).

(E) The accelerated examination support document must include a showing of where each limitation of the claims finds support under the first paragraph of 35 U.S.C. 112 in the written description of the specification. If applicable, the showing must also identify: (1) Each means- (or step-) plus-function claim element that invokes consideration under 35 U.S.C. 112, ¶ 6; and (2) the structure, material, or acts in the specification that correspond to each means- (or step-) plus-function claim element that invokes consideration under 35 U.S.C. 112, ¶ 6. If the application claims the benefit of one or more applications under title 35, United States Code, the showing must also include where each limitation of the claims finds support under the first paragraph of 35 U.S.C. 112 in each such application in which such support exists.

(F) The accelerated examination support document must identify any cited references that may be disqualified as prior art under 35 U.S.C. 103(c) as amended by the Cooperative Research and Technology Enhancement (CREATE) Act (Pub. L. 108–453, 118 Stat. 3596 (2004)).

Part II. Decision on Petition To Make Special: Applicant will be notified of the decision by the deciding official. If the application and/or petition does not meet all the prerequisites set forth in this notice for the application to be granted special status (including a determination that the search is deemed to be insufficient), the applicant will be notified of the defects and the application will remain in the status of a new application awaiting action in its regular turn. In those instances in which the petition or accelerated examination support document is defective in one or more requirements, applicant will be given a single opportunity to perfect the petition or accelerated examination support document within a time period of one month (no extensions under 37 CFR 1.136(a)). This opportunity to perfect a petition does not apply to applications that are not in condition for examination on filing. *See* Part VIII (subsection Condition for Examination). If the document is satisfactorily corrected in a timely manner, the petition will then be granted, but the final disposition of the application may occur later than twelve months from the filing date of the application. Once a petition has been granted, prosecution will proceed according to the procedure set forth below.

Part III. The Initial Action on the Application by the Examiner: Once the application is granted special status, the application will be docketed and taken up for action expeditiously (*e.g.*, within two weeks of the granting of special status). If it is determined that all the claims presented are not directed to a single invention, the telephone restriction practice set forth in MPEP § 812.01 will be followed. Applicant must make an election without traverse during the telephonic interview. If applicant refuses to make an election without traverse, or the examiner cannot reach the applicant after a reasonable effort, the examiner will treat the first claimed invention (the invention of claim 1) as constructively elected without traverse for examination. Continuing applications (*e.g.*, a divisional application directed to the non-elected inventions) will not automatically be given special status based on papers filed with the petition in the parent application. Each continuing application must on its own meet all requirements for special status.

If the USPTO determines that a possible rejection or other issue must be addressed, the examiner will telephone the applicant to discuss the issue and any possible amendment or submission to resolve such issue. The USPTO will not issue an Office action (other than a notice of allowance) unless either: (1) An interview was conducted but did not result in the application being placed in condition for allowance; or (2) there is a determination that an interview is unlikely to result in the application being placed in condition for allowance. Furthermore, prior to the mailing of any Office action rejecting the claims, the USPTO will conduct a conference to review the rejections set forth in the Office action.

If an Office action other than a notice of allowance or a final Office action is mailed, the Office action will set a shortened statutory period of one-month or thirty-days, whichever is longer. No extensions of this shortened statutory period under 37 CFR 1.136(a) will be permitted. Failure to timely file a reply will result in abandonment of the application. *See* Parts V and VI for more information on post-allowance and after-final procedures.

Part IV. Reply by Applicant: A reply to an Office action must be limited to the rejections, objections, and requirements made. Any amendment that attempts to: (1) Add claims which would result in more than three independent claims, or more than twenty total claims, pending in the application; (2) present claims not encompassed by the preexamination search (*see* item 8 of Part I) or an updated accelerated examination support document (*see* next paragraph); or (3) present claims that are directed to a nonelected invention or an invention other than previously claimed in the application, will be treated as not fully responsive and will not be entered. *See* Part VIII (subsection Reply Not Fully responsive) for more information.

For any amendment to the claims (including any new claim) that is not encompassed by the accelerated examination support document in Part I, item 9, applicant is required to provide an updated accelerated examination

support document that encompasses the amended or new claims at the time of filing the amendment. Failure to provide such updated accelerated examination support document at the time of filing the amendment will cause the amendment to be treated as not fully responsive and not to be entered. *See* Part VIII (subsection Reply Not Fully Responsive) for more information. Any IDS filed with an updated accelerated examination support document must also comply with the requirements of 37 CFR 1.97 and 1.98.

Any reply or other papers must be filed electronically via EFS-Web so that the papers will be expeditiously processed and considered. If the papers are not filed electronically via EFS-Web, or the reply is not fully responsive, the final disposition of the application may occur later than twelve months from the filing of the application.

Part V. Post-Allowance Processing: The mailing of a notice of allowance is the final disposition for purposes of the twelve-month goal for the program. In response to a notice of allowance, applicant must pay the issue fee within three months from the date of mailing of the Notice of Allowance and Fee(s) Due (form PTOL–85) to avoid abandonment of the application. In order for the application to be expeditiously issued as a patent, the applicant must also: (1) Pay the issue fee (and any outstanding fees due) within one month from the mailing date of the form PTOL–85; and (2) not file any post-allowance papers that are not required by the USPTO (*e.g.*, an amendment under 37 CFR 1.312 that was not requested by the USPTO).

Part VI. After-Final and Appeal Procedures: The mailing of a final Office action or the filing of a notice of appeal, whichever is earlier, is the final disposition for purposes of the twelve-month goal for the program. Prior to the mailing of a final Office action, the USPTO will conduct a conference to review the rejections set forth in the final Office action (*i.e.*, the type of conference conducted in an application on appeal when the applicant requests a pre-appeal brief conference). In order for the application to be expeditiously forwarded to the Board of Patent Appeals and Interferences (BPAI) for a decision, applicant must: (1) Promptly file the notice of appeal, appeal brief, and appeal fees; and (2) not request a pre-appeal brief conference. A pre-appeal brief conference would not be of value in an application under a final Office action because the examiner will have already conducted such a conference prior to mailing the final Office action. During the appeal process, the application will be treated in accordance with the normal appeal procedures. The USPTO will continue to treat the application special under the accelerated examination program after the decision by the BPAI.

Any after-final amendment, affidavit, or other evidence filed under 37 CFR 1.116 or 41.33 must also meet the requirements set forth in Part IV (Reply by Applicant). If applicant files a request for continued examination (RCE) under 37 CFR 1.114 with a submission and fee, the submission must meet the reply requirements under 37 CFR 1.111 (*see* 37 CFR 1.114(c)) and the requirements set forth in Part IV (Reply by Applicant). The filing of the RCE is a final disposition for purposes of the twelve-month goal for the program. The application will retain its special status and remain in the accelerated examination program. Thus, the examiner will continue to examine the application in accordance with the procedures set forth in Part III and any subsequent replies filed by applicant must meet the requirements of Part IV. The goal of the program will then be to reach a final disposition of the application within twelve months from the filing of the RCE.

Part VII. Proceedings Outside the Normal Examination Process: If an application becomes involved in proceedings outside the normal examination process (*e.g.*, a secrecy order, national security review, interference, or petitions under 37 CFR 1.181–1.183), the USPTO will treat the application special under the accelerated examination program before and after such proceedings. During those proceedings, however, the application will not be accelerated. For example, during an interference proceeding, the application will be treated in accordance with the normal interference procedures and will not be treated under the accelerated examination program. Once any one of these proceedings is completed, the USPTO will process the application expeditiously under the accelerated examination program until it reaches final disposition, but that may occur later than twelve months from the filing of the application.

Part VIII. More Information: Eligibility: Any non-reissue utility or design application filed under 35 U.S.C. 111(a) on or after the effective date of this program is eligible for the revised accelerated examination program. The following types of filings are not eligible for this revised accelerated examination program: Plant applications, reissue applications, applications entering the national stage from an international application after compliance with 35 U.S.C. 371, reexamination proceedings, RCEs under 37 CFR 1.114 (unless the application was previously granted special status under the program), and petitions to make special based on applicant's health or age or under the PPH pilot program. Rather than participating in this revised accelerated examination program, applicants for a design patent may participate in the expedited examination program by filing a request in compliance with the guidelines set forth in MPEP § 1504.30. *See* 37 CFR 1.155.

Form: Applicant should use form PTO/SB/28 for filing a petition to make special, other than those based on applicant's health or age or the PPH pilot program. The form is available on EFS-Web and on the USPTO's Internet Web site at *http://www.uspto.gov/web/forms/index.html.*

Conditions for Examination: The application must be in condition for examination at the time of filing. This means the application must include the following:

(A) Basic filing fee, search fee, and examination fee, under 37 CFR 1.16 (*see* MPEP section 607(I)),

(B) Application size fee under 37 CFR 1.16(s) (if the specification and drawings exceed 100 sheets of paper) (*see* MPEP section 607(II));

(C) An executed oath or declaration in compliance with 37 CFR 1.63;

(D) A specification (in compliance with 37 CFR 1.52) containing a description (37 CFR 1.71) and claims in compliance with 37 CFR 1.75;

(E) A title and an abstract in compliance with 37 CFR 1.72;

(F) Drawings in compliance with 37 CFR 1.84;

(G) Electronic submissions of sequence listings in compliance with 37 CFR 1.821(c) or (e), large tables, or computer listings in compliance with 37 CFR 1.96, submitted via the USPTO's electronic filing system (EFS) in ASCII text as part of an associated file (if applicable);

(H) Foreign priority claim under 35 U.S.C. 119(a)–(d) identified in the executed oath or declaration or an application data sheet (if applicable);

(I) Domestic benefit claims under 35 U.S.C. 119(e), 120, 121, or 365(c) in compliance with 37 CFR 1.78 (*e.g.*, the specific reference to the prior application must be submitted in the first sentence(s) of the specification or in an application data sheet, and for any benefit claim to a non-English language provisional application, the application must include a statement that: (a) An English language translation, and (b) a statement that the translation is

accurate, have been filed in the provisional application) (if applicable);

(J) English language translation under 37 CFR 1.52(d), a statement that the translation is accurate, and the processing fee under 37 CFR 1.17(i) (if the specification is in a non-English language);

(K) No preliminary amendments present on the filing date of the application; and

(L) No petition under 37 CFR 1.47 for a non-signing inventor.

Furthermore, if the application is a design application, the application must also comply with the requirements set forth in 37 CFR 1.151–1.154.

Applicant should also provide a suggested classification, by class and subclass, for the application on the transmittal letter, petition, or an application data sheet as set forth in 37 CFR 1.76(b)(3) so that the application can be expeditiously processed.

The petition to make special will be dismissed if the application omits an item or includes a paper that causes the Office of Initial Patent Examination (OIPE) to mail a notice during the formality review (*e.g.*, a notice of incomplete application, notice to file missing parts, notice to file corrected application papers, notice of omitted items, or notice of informal application). The opportunity to perfect a petition (Part II) does not apply to applications that are not in condition for examination on filing.

Reply Not Fully Responsive: If a reply to a non-final Office action is not fully responsive, but a *bona fide* attempt to advance the application to final action, the examiner may provide one month or thirty-days, whichever is longer, for applicant to supply the omission or a fully responsive reply. No extensions of this time period under 37 CFR 1.136(a) will be permitted. Failure to timely file the omission or a fully responsive reply will result in abandonment of the application. If the reply is not a *bona fide* attempt or it is a reply to a final Office action, no additional time period will be given. The time period set forth in the previous Office action will continue to run.

Withdrawal From Accelerated Examination: There is no provision for "withdrawal" from special status under the accelerated examination program. An applicant may abandon the application that has been granted special status under the accelerated examination program in favor of a continuing application, and the continuing application will not be given special status under the accelerated examination program unless the continuing application is filed with a petition to make special under the accelerated examination program. The filing of an RCE under 37 CFR 1.114, however, will not result in an application being withdrawn from special status under the accelerated examination program.

The Twelve-Month Goal: The objective of the accelerated examination program is to complete the examination of an application within twelve months from the filing date of the application. The twelve-month goal is successfully achieved when one of the following final dispositions occurs: (1) The mailing of a notice of allowance; (2) the mailing of a final Office action; (3) the filing of an RCE; or (4) the abandonment of the application. The final disposition of an application, however, may occur later than the twelve-month timeframe in certain situations (*e.g.*, an IDS citing new prior art after the mailing of a first Office action). *See* Part VII for more information on other events that may cause examination to extend beyond this twelve-month time frame. In any event, however, this twelve-month timeframe is simply a goal. Any failure to meet the twelve-month goal or other issues relating to this twelve-month goal are neither petitionable nor appealable matters.

Paperwork Reduction Act: This notice involves information collection requirements which are subject to review by the Office of Management and Budget (OMB) under the Paperwork Reduction Act of 1995 (44 U.S.C. 3501 *et seq.*). The collection of information involved in this notice has been reviewed and previously approved by OMB under OMB control number 0651–0031. The Office has submitted a Change Worksheet to OMB for review of form PTO/SB/28 Petition to Make Special Under the Accelerated Examination.

Notwithstanding any other provision of law, no person is required to respond to nor shall a person be subject to a penalty for failure to comply with a collection of information subject to the requirements of the Paperwork Reduction Act unless that collection of information displays a currently valid OMB control number.

Section 708.02 of the *Manual of Patent Examining Procedure* will be revised in due course to reflect this change in practice.

Dated: June 20, 2006.

Jon W. Dudas,

Under Secretary of Commerce for Intellectual Property and Director of the United States Patent and Trademark Office.

[FR Doc. E6–10022 Filed 6–23–06; 8:45 am]

BILLING CODE 3510–16–P

COMMITTEE FOR THE IMPLEMENTATION OF TEXTILE AGREEMENTS

Designation under the Textile and Apparel Commercial Availability Provisions of the United States Caribbean Basin Trade Partnership Act (CBTPA)

June 21, 2006.

AGENCY: The Committee for the Implementation of Textile Agreements (CITA)

ACTION: Designation.

EFFECTIVE DATE: June 26, 2006.

SUMMARY: The Committee for the Implementation of Textile Agreements (CITA) has determined that certain 100 percent cotton, yarn-dyed, 3- or 4-thread twill weave, flannel fabrics, of combed, ring spun single yarns, of the specifications detailed below, classified in subheading 5208.43.0000 of the Harmonized Tariff Schedule of the United States (HTSUS), for use in products in Categories 340, 341, and 350, cannot be supplied by the domestic industry in commercial quantities in a timely manner. The CITA hereby designates products in Categories 340, 341, and 350 that are both cut and sewn or otherwise assembled in one or more eligible CBTPA beneficiary countries from such fabrics, as eligible for quota free and duty-free treatment under the textile and apparel commercial availability provisions of the CBTPA and eligible under HTSUS subheading 9820.11.27 to enter free of quota and duties, provided that all other fabrics in the referenced apparel articles are wholly formed in the United States from yarns wholly formed in the United States.

FOR FURTHER INFORMATION CONTACT: Maria K. Dybczak, Office of Textiles and Apparel, U.S. Department of Commerce, (202) 482 3400.

SUPPLEMENTARY INFORMATION:

Authority: Section 213(b)(2)(A)(v)(II) of CBERA, as added by Section 211(a) of the CBTPA; Presidential Proclamation 7351 of October 2, 2000; Section 6 of Executive Order No. 13191 of January 17, 2001.

BACKGROUND:

The commercial availability provision of the CBTPA provides for duty free and quota free treatment for apparel articles that are both cut (or knit to shape) and sewn or otherwise assembled in one or more beneficiary CBTPA country from fabric or yarn that is not formed in the United States if it has been determined that such yarns or fabrics cannot be supplied by the domestic industry in commercial quantities in a timely

UNITED STATES PATENT AND TRADEMARK OFFICE

UNITED STATES DEPARTMENT OF COMMERCE
United States Patent and Trademark Office
Address: COMMISSIONER FOR PATENTS
P.O. Box 1450
Alexandria, Virginia 22313-1450
www.uspto.gov

APPLICATION NO.	FILING DATE	FIRST NAMED INVENTOR	ATTORNEY DOCKET NO.	CONFIRMATION NO.
12/114,248	05/02/2008	Richard A. Bloomer JR.	AUS920070661US2	2702

59401 7590 07/18/2008
CANTOR COLBURN LLP - IBM AUSTIN
20 Church Street
22nd Floor
Hartford, CT 06103

EXAMINER
CALDWELL, ANDREW T

ART UNIT	PAPER NUMBER
2142	

MAIL DATE	DELIVERY MODE
07/18/2008	PAPER

Please find below and/or attached an Office communication concerning this application or proceeding.

The time period for reply, if any, is set in the attached communication.

UNITED STATES PATENT AND TRADEMARK OFFICE

COMMISSIONER FOR PATENTS
UNITED STATES PATENT AND TRADEMARK OFFICE
WASHINGTON, DC 20231
www.uspto.gov

Nicholas Trenkle
CANTOR COLBURN LLP - IBM AUSTIN
20 Church Street
22nd Floor
Hartford CT 06103

In re Application of:
Bloomer et al.
Serial No.: **12/114248**
Filed: May 02, 2008
Docket: **AUS920070661US2**
For: **REMOTE CONFIGURATION OF AUTOMATIC RESPONSE SETTINGS**

DECISION ON PETITION TO MAKE SPECIAL FOR NEW APPLICATION UNDER 37 C.F.R. § 1.102 & M.P.E.P. § 708.02

This is a decision on the petition filed on May 02, 2008 to make the above-identified application special for accelerated examination procedure under 37 C.F.R. § 1.102(d).

The petition to make the application special is **DISMISSED**.

REGULATION AND PRACTICE

A grantable petition to make special under 37 C.F.R. § 1.102(d) and pursuant to the "Change to Practice for Petitions in Patent Applications to Make Special and for Accelerated Examination" published in the Federal Register on June 26, 2006 (71 Fed. Reg. 36323), must satisfy the following conditions:

I. Conditions Regarding the Application:

1. the application must be a non-reissue utility or design application filed under 37 CFR 1.111(a);
2. the application, the petition and the required fees must be filed electronically using the USPTO's electronic filing system (EFS), or EFS-web; if not filed electronically, a statement asserting that EFS and EFS-web were not available during the normal business hours.
3. at the time of filing, the application must be complete under 37 CFR 1.51 and in condition for examination;
4. the application must contain three or fewer independent claims and twenty or fewer total claims and the claims must be directed to a single invention.

II. Conditions Regarding the Petition:

The petition must:

1. be filed with the application;

2. include a statement that applicant agrees not to separately argue the patentability of any independent claim during any appeal in the application;

3. include a statement that applicant agrees to make an election without traverse in a telephone interview.

4. include a statement that applicant agrees to conduct such an interview when requested by the examiner.

5. include a statement, made based on a good faith belief, that a preexamination search in compliance with the following requirements, was conducted, including an identification of the filed of search by United States class and subclass, where applicable, and for database searches, the search logic or chemical structure or sequence used as a query, the name of the file(s) searched and the database service, and the date of the search.

The preexamination search must:

5.1 involve U.S. patents and patent application publications, foreign patent documents, and non-patent literature, unless the applicant can justify with reasonable certainty that no references more pertinent than those already identified are likely to be found in the eliminated sources and includes such a justification with this statement;

5.2. be directed to the claimed invention and encompass all of the features of the claims, giving the claims the broadest reasonable interpretation;

5.3. encompass the disclosed features that may be claimed.

6. must provide in support of the petition an accelerated examination support document. An accelerated examination support document must include:

6.1. an information disclosure statement (IDS) in compliance with 37 CFR 1.98 citing each reference deemed most closely related to the subject matter of each of the claims;

6.2. an identification of all the limitations in the claims that are disclosed by the reference specifying where the limitation is disclosed in the cited reference;

6.3. a detailed explanation of how each of the claims are patentable over the references cited with particularity required by 37 CFR 1.111(b) and (c);

6.4. a concise statement of the utility of the invention as defined in each of the independent claims (unless the application is a design application);

6.5. a showing of where each limitation of the claims finds support under 35 USC 112, first paragraph, in the written description of the specification. If applicable, the showing must also identify: (1) each means- (or step) plus-function claim element that invokes consideration under 35 UDC 112, sixth paragraph; and (2) the structure, material, or acts in the specification that corresponds to each means- (or step) plus-function claim element that invokes consideration under 35 UDC 112, sixth paragraph; if the application claims the benefit of one or more applications under title 35, United States Code, the showing must also include where each limitation of the claims finds support under 35 USC 112, first paragraph, in each such application in which such supports exists;

6.6. an identification of any cited references that may be disqualified under 35 USC 103(c).

REVIEW OF FACTS

The conditions I 1-4, II 1-4 and II 5.1 - 5.3, II and 6.1-6.2 and 6.4-6.6 above are considered to have been met. However, the petition fails to comply with conditions II 6.3 above. Therefore, the petition fails to meet the required conditions to be accorded special status under the accelerated examination procedure.

Regarding the requirement of MPEP §708.02(a)(I.)(I)(3) and item II 6.3 above, the accelerated examination support document does not provide a detailed explanation, with particularity required by 37 CFR 1.111(b) and (c), regarding patentability of the claims over the references cited.

Specifically, the Detailed Explanation of Patentability claims without further explanation that "element (d) of claim 1" is not taught by the prior art either "alone or in combination." This is deficient because:

- The petition explains the patentability of the subject matter over individually cited prior art, but does not explain how this matter is patentable over combinations of this prior art.
- Specifically, petitioner does not explain the distinction between the subject matter claimed here over the combination of Bocking and Evans.

  Bocking teaches a "**user interface to remotely control e-mail settings for the device**" including the ability "**to create, enable, edit or disable the out-of-office reply e-mail setting**" as specified in this application. Description, Col 2, Lines 3-6. The only arguable distinction between Bocking and the subject matter here is that Bocking does not teach the use of email messages as a communications interface, using wireless protocols instead.

  Although email is well known in the art as a means of transmitting information from one entity to another, it is plausible that using email to communicate with a computer interface in certain circumstances might be non-obvious. However, Evans teaches the use of email to communicate with an email server and have it perform actions automatically. *See* Evans, Description at [0048], "**when one or more criteria is met by a given message, the one or more associated actions may then be taken**." Evans indicates that the term "associated actions" should be construed broadly, including an expansive list of actions (omitted here) while referring to "**a variety of other actions**" that were unlisted. *Id.* Although configurability itself is a well known feature of email servers that could be assumed as implicit in "a variety of other actions," that feature is also clearly taught by Bocking.

  The petitioner should lay out precisely how the subject matter sought to be patented is non-obvious in light of this cited prior art.
- Without this explanation, the petitioner's approach represents a "general allegation that the claims define a patentable invention" and does not satisfy the requirement that the petitioner "specifically point out how the language of the claims patentably distinguishes them from the references." It thus fails to satisfy the requirements of MPEP §708.02(a)(I.)(I)(3).

DECISION

For the above-stated reasons, the petition is **dismissed**. The application will therefore be taken up by the examiner for action in its regular turn.

Petitioner is given a single opportunity to perfect the petition. Any request for reconsideration of this decision must be submitted within 1 (one) month or 30 (thirty) days, whichever is longer, (no extension of time under 37 CFR 1.136(a)) from the date of this decision in order to be considered timely. Any request for reconsideration must address the deficiencies indicated above.

Petitioner is reminded that, upon granting of the special status of the application on request for reconsideration, the application will be processed expeditiously. However, due to the dismissal of the instant petition, examination may not be completed within twelve months of the filing date of the application.

Any inquiry regarding this decision should be directed to Tod Swann, Quality Assurance Specialist, at (571) 272-3612. A second point of contact is QAS Kim Huynh whose telephone number is (571) 272-4147.

Tod R Swann
Quality Assurance Specialist
Technology Center 2100
Computer Security, Architecture and Software
571-272-3612

UNITED STATES PATENT AND TRADEMARK OFFICE

UNITED STATES DEPARTMENT OF COMMERCE
United States Patent and Trademark Office
Address: COMMISSIONER FOR PATENTS
P.O. Box 1450
Alexandria, Virginia 22313-1450
www.uspto.gov

APPLICATION NO.	FILING DATE	FIRST NAMED INVENTOR	ATTORNEY DOCKET NO.	CONFIRMATION NO.
12/114,248	05/02/2008	Richard A. Bloomer JR.	AUS920070661US2	2702

59401 7590 09/25/2008
CANTOR COLBURN LLP - IBM AUSTIN
20 Church Street
22nd Floor
Hartford, CT 06103

EXAMINER
CALDWELL, ANDREW T

ART UNIT	PAPER NUMBER
2142	

NOTIFICATION DATE	DELIVERY MODE
09/25/2008	ELECTRONIC

Please find below and/or attached an Office communication concerning this application or proceeding.

The time period for reply, if any, is set in the attached communication.

Notice of the Office communication was sent electronically on above-indicated "Notification Date" to the following e-mail address(es):

usptopatentmail@cantorcolburn.com

UNITED STATES PATENT AND TRADEMARK OFFICE

COMMISSIONER FOR PATENTS
UNITED STATES PATENT AND TRADEMARK OFFICE
WASHINGTON, DC 20231
www.uspto.gov

Nicholas Trenkle
CANTOR COLBURN LLP - IBM AUSTIN
20 Church Street
22nd Floor
Hartford CT 06103

In re Application of:
Bloomer et al.
Serial No.: **12/114248**
Filed: May 02, 2008
Docket: **AUS920070661US2**
For: **REMOTE CONFIGURATION OF AUTOMATIC RESPONSE SETTINGS**

DECISION ON PETITION TO MAKE SPECIAL FOR NEW APPLICATION UNDER 37 C.F.R. § 1.102 & M.P.E.P. § 708.02

This is a decision on the renewed petition filed on August 14, 2008 to make the above-identified application special for accelerated examination procedure under 37 C.F.R. § 1.102(d). The original petition, submitted on May 02, 2008 was dismissed in the decision mailed on July 18, 2008.

The renew petition to make the application special is **GRANTED** as the new Support Document meets the requirements of condition II 6.3 that were deficient in the original petition.

The application is eligible for accelerated examination and the renewed petition complies with the conditions for granting the application special status pursuant to the "Change to Practice for Petitions in Patent Applications to Make Special and for Accelerated Examination" published June 26, 2006, in the Federal Register. (71 Fed. Reg. 36323) as the original identified deficiencies for failing to comply with the requirements for the pre-examination search encompassing all of the features of the claims, and giving the claims the broadest reasonable interpretation, the statement of patentability must provide a detailed explanation of how each of the claims are patentable and the concise statement of the utility must be of the invention as defined in each of the independent claims (reference must be made to independent claims 1, 14 and 20) have been corrected.

The prosecution of the instant application will be conducted expeditiously according to the following guidelines.

1. The application will be docketed to an examiner and taken up for action within two weeks of the date of this decision.

2. Restriction Practice:
If the examiner determines that the claims are not directed to a single invention, a telephone request to elect one single invention will be made pursuant to MPEP 812.01. As a prerequisite to the grant of this petition, the applicant has agreed to make an oral election, by telephone, without traverse. If the applicant refuses to make an election without traverse, or the examiner cannot reach the applicant after a reasonable effort, the examiner will treat the first claimed invention (invention defined by claim 1) as having being constructively elected without traverse for examination.

3. Office action:
If it is determined that, after appropriate consultation, there is a potential rejection or any other issue to be addressed, the examiner will telephone the applicant and arrange an interview to discuss and resolve the issue. An Office action, other than a Notice of Allowance and Fee(s) Due (Notice of Allowance), will not be issued unless either: 1) an interview was conducted but did not result in agreed to action that places the application in condition for allowance, or, 2) a determination is made that an interview would be unlikely to result in the application being placed in condition for allowance, and 3) an internal conference has been held to review any rejection of any claim.

4. Time for Reply:
An Office action other than a Notice of Allowance or a final Office action will set a shortened statutory period of one month or thirty days, whichever is longer, for reply with no extension of time available under 37 CFR 1.136(a). Failure to timely file a reply within this non-extendible period for reply will result in the abandonment of the application.

5. Reply by Applicant:
A timely reply to an Office action other than the Notice of Allowance must be submitted electronically via EFS or EFS-web and limited to addressing the rejections, objections and requirement made. Any amendment that attempts to: 1) add claims which would result in more than three pending independent claims or more than twenty pending total claims; 2) present claims not encompassed by the pre-examination search or an updated accelerated examination support document; or 3) present claims that are directed a non-elected invention or an invention other than that previously claimed and examined in the application, will be treated as not fully responsive and will not be entered.

For any amendment to the claims (including any new claim) that is not encompassed by the accelerated examination support document, applicant must provide an updated accelerated examination support document that

encompasses the amended or new claims at the time of filing of the amendment.

To proceed expeditiously with the examination, it is recommended that a reply with amendments made to any claim or with any new claim being added be accompanied by an updated accelerated examination support document or a statement explaining how the amended or new claim is supported by the original accelerated examination support document.

6. Information Disclosure Statement (IDS):
Any IDS filed during prosecution must be submitted electronically via EFS or EFS-web, accompanied by an updated accelerated examination support document, and be in compliance with 37 CFR 1.97 and 1.98.

7. Post-Allowance Processing:
To expedite processing of the allowed application into a patent, the applicant must: 1) pay the required fees within one month of the date of the Notice of Allowance, and 2) not file any post allowance papers not required by the Office. In no event may the issue fee be paid and accepted later than three months from the date of the Notice of Allowance.

8. After-Final and Appeal Procedures:
To expedite prosecution, after receiving the final Office action, applicant must: 1) promptly file a notice of appeal, an appeal brief and appeal fees; and 2) not request a pre-appeal brief conference.

Any amendment, affidavit or other evidence filed after final Office action must comply with applicable rules and the requirements outlined in numbered paragraphs 5 and 6 above.

On appeal, the application will proceed according to normal appeal procedures. After appeal, the application will again be treated special.

9. Proceedings Outside the Normal Examination Process:
If the application becomes involved in a proceeding that is outside the normal examination process (e.g., a secrecy order, national security review, interference proceeding, petitions under 37 CFR 1.181, 182 or 183), the application will be treated special before and after such proceeding.

10. Final Disposition:
The twelve month goal of this accelerated examination procedure ends with a final disposition. The mailing of a final Office action, a Notice of Allowance, the filing of a Notice of Appeal, or the filing of a Request for Continued Examination (RCE) is the final disposition.

If, during prosecution, a paper is not filed electronically using EFS-web, a reply is filed but is not fully responsive, the application is involved in an appeal, or a proceeding outside normal examination process, the application will still be examined expeditiously, however, the final disposition may occur more than twelve months from the filing of the application.

Any inquiry regarding this decision should be directed to Tod Swann, Quality Assurance Specialist, at (571) 272-3612. A second point of Contact is Kim Huynh at (571)-272-4147.

Tod R Swann
Quality Assurance Specialist
Technology Center 2100
Computer Security, Architecture and Software

UNITED STATES PATENT AND TRADEMARK OFFICE

UNITED STATES DEPARTMENT OF COMMERCE
United States Patent and Trademark Office
Address: COMMISSIONER FOR PATENTS
P.O. Box 1450
Alexandria, Virginia 22313-1450
www.uspto.gov

APPLICATION NO.	FILING DATE	FIRST NAMED INVENTOR	ATTORNEY DOCKET NO.	CONFIRMATION NO.
12/114,257	05/02/2008	Howard N. Anglin	AUS920071013US1	2720

78038 7590 08/13/2008
LEVEQUE INTELLECTUAL PROPERTY LAW, P.C.
221 E. CHURCH STREET
FREDERICK, MD 21701

EXAMINER
CALDWELL, ANDREW T

ART UNIT	PAPER NUMBER
2142	

MAIL DATE	DELIVERY MODE
08/13/2008	PAPER

Please find below and/or attached an Office communication concerning this application or proceeding.

The time period for reply, if any, is set in the attached communication.

UNITED STATES PATENT AND TRADEMARK OFFICE

Commissioner for Patents
United States Patent and Trademark Office
P.O. Box 1450
Alexandria, VA 22313-1450
www.uspto.gov

MS. RENEE MICHELLE LEVEQUE
LEVEQUE INTELLECTUAL PROPERTY LAW, P.C.
221 E. CHURCH STREET
FREDERICK, MD 21701

In re Application of:
Howard N. ANGLIN, et al.
Application No. 12/114257
Filed: May 2, 2008
Docket: AUS920071013US1
For: AUTOMATIC BLOGGING DURING MEDIA VIEWING

DECISION ON PETITION TO MAKE SPECIAL (ACCELERATED EXAMINATION) UNDER 37 C.F.R. § 1.102(d) and M.P.E.P. §708.02

This is a decision on the Petition To Make Special under 37 C.F.R. § 1.102(d) and M.P.E.P. §708.02(VIII): Accelerated Examination, filed on May 2, 2008.

The petition is **DISMISSED**.

REGULATION AND PRACTICE

A grantable petition to make special under 37 C.F.R. § 1.102(d) and pursuant to the "Change to Practice for Petitions in Patent Applications to Make Special and for Accelerated Examination" published in the Federal Register on June 26, 2006 (71 Fed. Reg. 36323), must satisfy the following conditions:

I. Conditions Regarding the Application:

1. the application must be a non-reissue utility or design application filed under 37 CFR 1.111(a);
2. the application, the petition and the required fees must be filed electronically using the USPTO's electronic filing system (EFS), or EFS-web; if not filed electronically, a statement asserting that EFS and EFS-web were not available during the normal business hours.
3. at the time of filing, the application must be complete under 37 CFR 1.51 and in condition for examination;
4. the application must contain three or fewer independent claims and twenty or fewer total claims and the claims must be directed to a single invention.

II. Conditions Regarding the Petition:

The petition must:

1. be filed with the application;

2. include a statement that applicant agrees not to separately argue the patentability of any independent claim during any appeal in the application;

3. include a statement that applicant agrees to make an election without traverse in a telephone interview.

4. include a statement that applicant agrees to conduct such an interview when requested by the examiner.

5. include a statement, made based on a good faith belief, that a preexamination search in compliance with the following requirements, was conducted, including an identification of the filed of search by United States class and subclass, where applicable, and for database searches, the search logic or chemical structure or sequence used as a query, the name of the file(s) searched and the database service, and the date of the search.

The preexamination search must:

5.1 involve U.S. patents and patent application publications, foreign patent documents, and non-patent literature, unless the applicant can justify with reasonable certainty that no references more pertinent than those already identified are likely to be found in the eliminated sources and includes such a justification with this statement;

5.2. be directed to the claimed invention and encompass all of the features of the claims, giving the claims the broadest reasonable interpretation;

5.3. encompass the disclosed features that may be claimed.

6. must provide in support of the petition an accelerated examination support document. An accelerated examination support document must include:

6.1. an information disclosure statement (IDS) in compliance with 37 CFR 1.98 citing each reference deemed most closely related to the subject matter of each of the claims;

6.2. an identification of all the limitations in the claims that are disclosed by the reference specifying where the limitation is disclosed in the cited reference;

6.3. a detailed explanation of how each of the claims is patentable over the references cited with particularity required by 37 CFR 1.111(b) and (c);

6.4. a concise statement of the utility of the invention as defined in each of the independent claims (unless the application is a design application);

6.5. a showing of where each limitation of the claims finds support under 35 USC 112, first paragraph, in the written description of the specification. If applicable, the showing must also identify: (1) each means- (or step) plus-function claim element that invokes consideration under 35 USC 112, sixth paragraph; and (2) the structure, material, or acts in the specification that corresponds to each means- (or step) plus-function claim element that invokes consideration under 35 USC 112, sixth paragraph; if the application claims the benefit of one or more applications under title 35, United States Code, the showing must also include where each limitation of the claims finds support under 35 USC 112, first paragraph, in each such application in which such supports exists;

6.6. an identification of any cited references that may be disqualified under 35 USC 103(c).

REVIEW OF FACTS

The conditions I.1 to II.4 above are considered to have been met. However, the petition fails to comply with conditions II.5 and II.6 above. Therefore, the petition fails to meet the required conditions to be accorded special status under the accelerated examination procedure.

Regarding item II.5.1 above, for classification searches, MPEP 719.05 states that a *classification search* is defined as **a complete search of all the documents in a particular subclass**, and it is not limited by any text query or other means. It is unclear whether Petitioner searched *all the subclasses in classes 348, 386, 398, and 725* with the requisite particularity to uncover relevant prior art. The Petitioner is required to clarify whether the identified field of search (all subclasses of classes 348, 386, 398, and 725) were performed as required by MPEP 719.05 (the identified classes and subclasses were searched in their entirety and not limited by any text query or other means); or if they were combined (i.e. the text search logic used was utilized in combination with the class/subclass), identify the logic and the combination of searches.

Based upon the subject matter of this Petition, a search in the following additional class and/or subclasses should be included in order to provide full coverage of where the most pertinent references are most likely to be found:

U.S. Field of Search;
709/203 and 217-219

Regarding MPEP § 708.02(a)(I.)(H) and item II.5.2 and 5.3 above, the text search query reported by the Petitioner fails for its lack of depth and breadth to cover all of the concepts the claims recite. The text search query fails for lack of inclusion of applicable terms, and their synonyms, as used in the claims of the invention. These include, without limitation: **automatic**, **media**, **viewing**, **network**, **capability**, **send**, **posting**, **tag**, **program information**, **identify**, **selecting**, **custom**, **generating**, **protocol**, **snapshot**, **including**, **server**, **coupled**, **blogging service**, **receiving**, and **message**. It is noted that these are key features identified by the applicant in the Detailed Explanation of Patentability to distinguish the instant claimed subject matter from the cited prior art.

Additionally, the reported text search query fails to include several terms which may reveal applicable prior art. For example, the terms **interactive**, **Twitter**, **real time**, **participatory journalism**, **online diary**, and **user-generated content**, along with synonyms thereof, should be included in the search string.

Finally, the text search query fails to use many common synonyms which may reveal applicable prior art. For example: Petitioner uses the term **remote** while failing to include the terms **unconnected**, **distant**, and **detached**; **control** while failing to include the terms **management**, **command**, **direct**, and **regulate**; **text** while failing to include the terms **content** and **tag**; **blog** while failing to include the terms **weblog**, **journal**, **web log**, and **logging**; **view** while failing to include the terms **observe** and **watch**.

Note that the above listed terms and synonyms are not meant to be an exhaustive list, merely an example of various terms and synonyms that can be used to produce a more comprehensive prior art search. Nor is this objection limited to only those sets of search terms listed; each search term used should be evaluated for applicable synonyms. Additionally, searches utilizing other databases should be modified to include the abovementioned terms and synonyms.

The Petitioner is advised to review the all claim limitations, especially those asserted as patentable distinctions from the cited references to ensure the preexamination search covers these concepts, and update the search incorporating the corrections to deficiencies identified above and/or provide any clarification if deemed necessary.

Regarding MPEP § 708.02(a)(I.)(1) and tem II.6.1, an ***information disclosure statement (IDS) in compliance with 37 CFR 1.98 citing each reference*** deemed most closely related to the subject matter of each of the claims must be provided.

The Petition documentation on file with the United States Patent and Trademark Office does not contain an acceptable Information Disclosure Statement sufficient to satisfy 37 C.F.R. § 1.98. In particular, though the Petitioner's file does indeed contain an Information Disclosure Statement document and an Information Disclosure Statement Letter, Petitioner's information has not been entered into either document – the documents are blank. It is incumbent on the petitioner to ensure that all required documentation is presented in its Petition To Make Special at the time of filing. An incomplete Petition is an independent ground for dismissal.

Regarding M.P.E.P. § 708.02(a)(I.)(I) and items II 6.2-6.3; Petitioner must provide a "detailed discussion of the references, which discussion points out, with the particularly requirement by 37 CFR § 1.111(b) and (c), how the claimed subject matter is patentable over the references." 37 CFR § 1.111(b) requires that the discussion of prior art references presents "arguments pointing out the specific distinctions believed to render the claims . . . patentable over any applied references," while 37 CFR § 1.111(c) states that "[a] general allegation that the claims define a patentable invention without specifically pointing out how the language of the claims patentably distinguishes them from the references does not comply with the requirements of this section."

Petitioner fails to provide a "detailed discussion of the references" with the requisite particularity that illuminates the salient prior art issues relative to the claimed subject matter. In particular, Petitioner's discussion the prior art fails to discuss the actual differences between the invention and the prior art, instead relying blanket statements of non-applicability. Each claim must be discussed and compared to each piece of prior art pointing out "with particularity" how the prior art fails to disclose the claimed invention.

Specifically, in the petition section labeled "9(B). Identification of Limitations Disclosed by References," Petitioner's discussion of the "Joost" article fails to sufficiently compare each of Petitioner's claim elements to the reference. Discussion of the limitations of prior art must include identification of each claimed limitation that is disclosed in the cited reference and specifically where each limitation disclosed in the cited reference is found. Petitioner fails to

identify the **location** in the "Joost" reference the quoted language originates while also failing to discuss the entirety of each claim limitation.

Additionally, in the petition section labeled "9(C). Detailed Explanation of Patentability," Petitioner fails to adequately discuss "specific distinctions" between the prior art and the claimed invention. Instead, Petitioner relies on the general allegation that the reference "fails to at least teach or suggest. . ." Petitioner's **cursory treatment** of the references does not detail, with the particularity called for under section (e), the relevancy of the prior art pedagogy in order to sufficiently set forth a case distinguishing the limitations claimed to be patentable in relation to the given reference. The petition must specifically show, for each independent claim, **specific language** that distinguishes it over each give reference in order to specify "how the claimed subject matter is patentable over the references." Note that if each of the cited prior art references "*fail to at least teach or suggest*" the majority of the limitations of the claimed invention, it is likely that the Petitioner's search criteria is deficient and needs to be expanded to uncover applicable prior art..

Regarding the requirement of MPEP § 708.02(a)(I.)(I)(5) and items 6.5-6.6 above, the Accelerated Examination Support Document is required to provide a showing of where each limitation of each claim finds support (separately identified) under 35 USC 112, first paragraph, in the written description of the specification. Petitioner identifies the support for the claimed features by referring to at least Figs. 1 and 2 and paragraphs 8-17 of the specification rather than by page, line and corresponding element in the figures. As such each claim feature is *not separately identified with its corresponding support element.* Petitioner is required to identify each claim limitations and the corresponding support in the cited portions ***(page, line, and corresponding elements in the figures)*** where the instant claim language finds corresponding support.

DECISION

For the above stated reasons, the petition to make special is **DISMISSED**.

Petitioner is given a single opportunity to perfect the petition. Any request for reconsideration of this decision must be submitted within 1 (one) month or 30 (thirty) days, whichever is longer, (no extension of time under 37 CFR 1.136(a)) from the date of this decision in order to be considered timely. Any request for reconsideration must address the deficiencies indicated above.

Petitioner is reminded that, upon granting of the special status of the application on request for reconsideration, the application will be processed expeditiously. However, due to the dismissal of the instant petition, examination may not be completed within twelve months of the filing date of the application.

Until the renewed petition is submitted, the application will be returned to the examiner's docket to await treatment on the merits in the normal order of examination.

Any inquiry regarding this decision should be directed the undersigned whose telephone number is (571) 272-4147. If attempts to reach the undersigned by telephone are unsuccessful, Tod Swann, Quality Assurance Specialist, can be reached at (571) 272-3612.

/Kim Huynh/

Kim Huynh,
Quality Assurance Specialist
Technology Center 2100
Computer Architecture, Software and Information Security

UNITED STATES PATENT AND TRADEMARK OFFICE

UNITED STATES DEPARTMENT OF COMMERCE
United States Patent and Trademark Office
Address: COMMISSIONER FOR PATENTS
P.O. Box 1450
Alexandria, Virginia 22313-1450
www.uspto.gov

APPLICATION NO.	FILING DATE	FIRST NAMED INVENTOR	ATTORNEY DOCKET NO.	CONFIRMATION NO.
12/114,257	05/02/2008	Howard N. Anglin	AUS920071013US1	2720

78038 7590 10/30/2008
LEVEQUE INTELLECTUAL PROPERTY LAW, P.C.
221 E. CHURCH STREET
FREDERICK, MD 21701

EXAMINER
CALDWELL, ANDREW T

ART UNIT	PAPER NUMBER
2442	

MAIL DATE	DELIVERY MODE
10/30/2008	PAPER

Please find below and/or attached an Office communication concerning this application or proceeding.

The time period for reply, if any, is set in the attached communication.

UNITED STATES PATENT AND TRADEMARK OFFICE

Commissioner for Patents
United States Patent and Trademark Office
P.O. Box 1450
Alexandria, VA 22313-1450
www.uspto.gov

MAILED

OCT 29 2008

TECHNOLOGY CENTER 2100

MS. RENEE MICHELLE LEVEQUE
LEVEQUE INTELLECTUAL PROPERTY LAW, P.C.
221 E. CHURCH STREET
FREDERICK, MD 21701

In re Application of:
Howard N. ANGLIN, et al.
Application No. 12/114257
Filed: May 2, 2008
Docket: AUS920071013US1
For: AUTOMATIC BLOGGING DURING MEDIA VIEWING

DECISION ON PETITION TO MAKE SPECIAL (ACCELERATED EXAMINATION) UNDER 37 C.F.R. § 1.102(d) and M.P.E.P. §708.02

This is a decision on petition filed on Sep 12, 2008 to make the above-identified application special for accelerated examination procedure under 37 C.F.R. § 1.102(d). The original petition, submitted on May 02, 2008 was dismissed in the decision mailed on August 13, 2008.

Regarding the updated search document, it was clarified by Ms. Leveque that the classification search of the identified classes 348, 386, 398, and 725 in section 8(A) was limited by the text queries documented in search string S1-S15 (conducted on Feb 29, 2008 under the subheading "1a) –search logic) rather than in accordance with MPEP 719.05.

The renewed petition adequately addresses all the concerns raised in the dismissal, the petition to make the application special is **GRANTED**.

The application is eligible for accelerated examination and the petition complies with the conditions for granting the application special status pursuant to the "Change to Practice for Petitions in Patent Applications to Make Special and for Accelerated Examination" published June 26, 2006, in the Federal Register. (71 Fed. Reg. 36323).

The prosecution of the instant application will be conducted expeditiously according to the following guidelines.

1. The application will be docketed to an examiner and taken up for action within two weeks of the date of this decision.

2. Restriction Practice:
   If the examiner determines that the claims are not directed to a single invention, a telephone request to elect one single invention will be made pursuant to MPEP 812.01. As a prerequisite to the grant of this petition, the applicant has agreed to make an oral election, by telephone, without traverse. If the applicant refuses to make an election

without traverse, or the examiner cannot reach the applicant after a reasonable effort, the examiner will treat the first claimed invention (invention defined by claim 1) as having being constructively elected without traverse for examination.

3. Office action:
If it is determined that, after appropriate consultation, there is a potential rejection or any other issue to be addressed, the examiner will telephone the applicant and arrange an interview to discuss and resolve the issue. An Office action, other than a Notice of Allowance and Fee(s) Due (Notice of Allowance), will not be issued unless either: 1) an interview was conducted but did not result in agreed to action that places the application in condition for allowance, or, 2) a determination is made that an interview would be unlikely to result in the application being placed in condition for allowance, and 3) an internal conference has been held to review any rejection of any claim.

4. Time for Reply:
An Office action other than a Notice of Allowance or a final Office action will set a shortened statutory period of one month or thirty days, whichever is longer, for reply with no extension of time available under 37 CFR 1.136(a). Failure to timely file a reply within this non-extendible period for reply will result in the abandonment of the application.

5. Reply by Applicant:
A timely reply to an Office action other than the Notice of Allowance must be submitted electronically via EFS or EFS-web and limited to addressing the rejections, objections and requirement made. Any amendment that attempts to: 1) add claims which would result in more than three pending independent claims or more than twenty pending total claims; 2) present claims not encompassed by the pre-examination search or an updated accelerated examination support document; or 3) present claims that are directed a non-elected invention or an invention other than that previously claimed and examined in the application, will be treated as not fully responsive and will not be entered.

   For any amendment to the claims (including any new claim) that is not encompassed by the accelerated examination support document, applicant must provide an updated accelerated examination support document that encompasses the amended or new claims at the time of filing of the amendment.

   To proceed expeditiously with the examination, it is recommended that a reply with amendments made to any claim or with any new claim being added be accompanied by an updated accelerated examination support document or a statement explaining how the amended or new claim is supported by the original accelerated examination support document.

6. Information Disclosure Statement (IDS):

Any IDS filed during prosecution must be submitted electronically via EFS or EFS-web, accompanied by an updated accelerated examination support document, and be in compliance with 37 CFR 1.97 and 1.98.

7. Post-Allowance Processing:
   To expedite processing of the allowed application into a patent, the applicant must: 1) pay the required fees within one month of the date of the Notice of Allowance, and 2) not file any post allowance papers not required by the Office. In no event may the issue fee be paid and accepted later than three months from the date of the Notice of Allowance.

8. After-Final and Appeal Procedures:
   To expedite prosecution, after receiving the final Office action, applicant must: 1) promptly file a notice of appeal, an appeal brief and appeal fees; and 2) not request a pre-appeal brief conference.

   Any amendment, affidavit or other evidence filed after final Office action must comply with applicable rules and the requirements outlined in numbered paragraphs 5 and 6 above.

   On appeal, the application will proceed according to normal appeal procedures. After appeal, the application will again be treated special.

9. Proceedings Outside the Normal Examination Process:
   If the application becomes involved in a proceeding that is outside the normal examination process (e.g., a secrecy order, national security review, interference proceeding, petitions under 37 CFR 1.181, 182 or 183), the application will be treated special before and after such proceeding.

10. Final Disposition:
    The twelve-month goal of this accelerated examination procedure ends with a final disposition. The mailing of a final Office action, a Notice of Allowance, the filing of a Notice of Appeal, or the filing of a Request for Continued Examination (RCE) is the final disposition.

If, during prosecution, a paper is not filed electronically using EFS-web, a reply is filed but is not fully responsive, the application is involved in an appeal, or a proceeding outside normal examination process, the application will still be examined expeditiously, however, the final disposition may occur more than twelve months from the filing of the application. In addition, Applicant is reminded that due to the dismissal of the previous petition submission, examination may not be completed within twelve months of the filing date of the application.

Any inquiry regarding this decision should be directed the undersigned whose telephone number is (571) 272-4147.

If attempts to reach the undersigned by telephone are unsuccessful, Tod Swann, Quality Assurance Specialist, can be reached at (571) 272-3612.

/Kim Huynh/

Kim Huynh
Quality Assurance Specialist
Technology Center 2400
Computer Architecture, Software and Information Security

UNITED STATES PATENT AND TRADEMARK OFFICE

Commissioner for Patents
United States Patent and Trademark Office
P.O. Box 1450
Alexandria, VA 22313-1450
www.uspto.gov

MCCORMICK, PAULDING & HUBER LLP
CITY PLACE II
185 ASYLUM STREET
HARTFORD, CT 06103

COPY MAILED

AUG 1 8 2008

OFFICE OF PETITIONS

In re Application of	:
Seror-Goguet and Martinez	:
Application No. 12/114,268	: DECISION REFUSING STATUS
Filed: May 2, 2008	: UNDER 37 CFR 1.47(a)
Attorney Docket No. 5224-0012	:

For: **BRACE-LOCKING DEVICE FOR AN AIRCRAFT UNDERCARRIAGE**

This is a decision on the petition under 37 CFR 1.47(a), filed July 15, 2008.

The petition under 37 CFR 1.47(a) is **dismissed.**

Any request for reconsideration under this decision must be submitted within TWO (2) MONTHS from the mail date of this decision. Extensions of time under 37 CFR 1.136(a) are permitted. Failure to respond will result in the abandonment of this application. Any response should be titled "Request for Reconsideration of Petition Under 37 CFR 1.47(a).

The above-identified application was filed on May 2, 2008, without an executed oath or declaration or filing fee. Accordingly, a "Notice to File Missing Parts Nonprovisional Application" (the "Notice") was mailed on May 23, 2008, requiring an executed oath or declaration and a surcharge for the late filing of the oath or declaration. The instant petition was filed on July 15, 2008,

A grantable petition under 37 CFR 1.47(a) requires:

(1) proof that the non-signing inventor(s) cannot be reached or refuses to sign the oath or declaration after having been presented with the application papers (specification, claims, and drawings);

(2) an acceptable oath or declaration in compliance with 35 U.S.C. §§ 115 and 116;

(3) the petition fee,

(4) a statement of the last known address of the non-signing inventor,

The instant petition lacks items (1) as set forth above.

Section 409.03(d) of the *Manual of Patent Examining Procedure* provides, in pertinent part, that:

> [a] refusal by an inventor to sign an oath or declaration when the inventor has not been presented with the application papers does not, itself, suggest that the inventor is refusing to join the application unless it is clear that the inventor understands exactly what he or she is being asked to sign and refuses to accept the application papers. A copy of the application papers should be sent to the last known address of the nonsigning inventor . . .
>
> Proof that a *bona fide* attempt was made to present a copy of the application papers (specification, including claims, drawings, and oath or declaration) to the nonsigning inventor for signature, but the inventor refused to accept delivery of the papers or expressly stated that the application papers should not be sent, may be sufficient. When there is an express oral refusal, that fact along with the time and place of the refusal must be stated in the statement of facts. When there is an express written refusal, a copy of the document evidencing that refusal must be made part of the statement of facts. The document may be redacted to remove material not related to the inventor's reasons for refusal.
>
> When it is concluded by the 37 CFR 1.47 applicant that a nonsigning inventor's conduct constitutes a refusal, all facts upon which that conclusion is based should be stated in the statement of facts in support of the petition or directly in the petition. If there is documentary evidence to support facts alleged in the petition or in any statement of facts, such evidence should be submitted. Whenever a nonsigning inventor gives a reason for refusing to sign the application oath or declaration, that reason should be stated in the petition.

The declaration offered by Benjamin Parzy speaks to the circumstances of the refusal of the inventor to execute the declaration, but only indicates that the Inventor's Declaration, power of attorney, and Assignment were sent to the inventor. There is not indication that a complete copy of the application papers (specification, claims, drawings, oath and declaration) was presented to the inventor. Petitioner must demonstrate that an effort was made to present a complete copy of the application papers to the inventor before the inventor can be said to have refused to join the prosecution of the application. Any renewed petition must, therefore, establish that an attempt was made to present a complete copy of the application papers to the non-signing inventor.

Additionally, petitioner did not provide a copy of the evidence demonstrating that the non-signing inventor received the documentation sent to her and did not provide a copy of the e-mail communication between the non-signing inventor and the representative of the 37 CFR 1.47(a) applicant. This documentation must accompany the renewed petition.

Further correspondence with respect to this matter should be addressed as follows:

By mail: Mail Stop Petitions
Commissioner for Patents
P.O. Box 1450
Alexandria, VA 22313-1450

By FAX: (571) 273-8300
Attn: Office of Petitions

Telephone inquiries concerning this decision should be directed to the undersigned at (571) 272-3222.

Kenya A. McLaughlin
Petitions Attorney
Office of Petitions

UNITED STATES PATENT AND TRADEMARK OFFICE

Commissioner for Patents
United States Patent and Trademark Office
P.O. Box 1450
Alexandria, VA 22313-1450
www.uspto.gov

MCCORMICK, PAULDING & HUBER LLP
CITY PLACE II
185 ASYLUM STREET
HARTFORD, CT 06103

COPY MAILED

NOV 17 2008

OFFICE OF PETITIONS

In re Application of
Seror-Goguet and Martinez
Application No. 12/114,268
Filed: May 2, 2008
Attorney Docket No. 5224-0012
For: **BRACE-LOCKING DEVICE FOR AN AIRCRAFT UNDERCARRIAGE**

: DECISION ACCORDING STATUS
: UNDER 37 CFR 1.47(a)

This is in response to the renewed petition under 37 CFR 1.47(a), filed October 17, 2008.

The renewed petition is **GRANTED**.

The above-identified application and papers have been reviewed and found in compliance with 37 CFR 1.47(a). This application is hereby accorded Rule 1.47(a) status.

The above-identified application was filed on May 2, 2008, without an executed oath or declaration or filing fee. Accordingly, a "Notice to File Missing Parts Nonprovisional Application" (the "Notice") was mailed on May 23, 2008, requiring an executed oath or declaration and a surcharge for the late filing of the oath or declaration. A petition under 37 CFR 1.47 was first filed on July 15, 2008, and dismissed by a decision mailed August 18, 2008.

Petitioner has shown that inventor Seror-Gouget has refused to join the prosecution of the application. The above-identified application and papers have been reviewed and found in compliance with 37 CFR 1.47(a). This application is hereby accorded Rule 1.47(a) status.

As provided in Rule 1.47(c), this Office will forward notice of this application's filing to the non-signing inventor at the addresses given in the petition. Notice of the filing of this application will also be published in the Official Gazette.

This application will be directed to the Office of Patent Applictaion Processing for further review.

Telephone inquiries regarding this decision should be directed to the undersigned at (571) 272-3222.

Kenya A. McLaughlin
Petitions Attorney
Office of Petitions

UNITED STATES PATENT AND TRADEMARK OFFICE

Commissioner for Patents
United States Patent and Trademark Office
P.O. Box 1450
Alexandria, VA 22313-1450
www.uspto.gov

TEXAS INSTRUMENTS INCORPORATED
P.O. BOX 655474, M/S 3999
DALLAS, TX 75265

MAILED

MAY 11 2009

OFFICE OF PETITIONS

In re Application of	:	
Shinichi TANAKA	:	
Application No. 12/114,429	:	DECISION ON PETITION
Filed: May 2, 2008	:	
Attorney Docket No. TI-64249	:	

This is a decision on the petition under the unintentional provisions of 37 CFR 1.137(b), filed March 24, 2009, to revive the above-identified application.

The petition is **GRANTED**.

The application became abandoned for failure to reply in a timely manner to the Notice to File Missing Parts of Nonprovisional Application (Notice), mailed May 22, 2008. The Notice set a period for reply of two (2) months from the mail date of the Notice. No extensions of time under the provisions of 37 CFR 1.136(a) were obtained. Accordingly, the application became abandoned on July 23, 2008.

The petition satisfies the requirements of 37 CFR 1.137(b) in that petitioner has supplied (1) the reply in the form of a declaration and the required fee; (2) the petition fee of $1620; and (3) the required statement of unintentional delay.

There is no indication that the person signing the petition was ever given a power of attorney to prosecute the application. If the person signing the petition desires to receive future correspondence regarding this application, the appropriate power of attorney document must be submitted.

Telephone inquiries concerning this decision should be directed to Diane Goodwyn at (571)272-6735.

This application is being referred to the Office of Patent Application Processing for appropriate action in the normal course of business on the reply received March 24, 2009.

Thurman K Page

Thurman Page
Petitions Examiner
Office of Petitions

UNITED STATES PATENT AND TRADEMARK OFFICE

Commissioner for Patents
United States Patent and Trademark Office
P.O. Box 1450
Alexandria, VA 22313-1450
www.uspto.gov

FITZPATRICK CELLA HARPER & SCINTO
1290 Avenue of the Americas
NEW YORK NY 10104-3800

MAIL

JUL 16 2010

DIRECTOR'S OFFICE
TECHNOLOGY CENTER 2600

In re Application of	:	
IMINE, RYOTARO	:	DECISION ON REQUEST TO
Application No. 12/114,440	:	PARTICIPATE IN PATENT
Filed: May 02, 2008	:	PROSECUTION HIGHWAY
Attorney Docket No. 01272.142256.	:	PROGRAM AND PETITION
	:	TO MAKE SPECIAL UNDER
	:	37 CFR 1.102(d)

This is a decision on the request to participate in the Patent Prosecution Highway (PPH) program and the petition under 37 CFR 1.102(d), filed June 01, 2010, to make the above-identified application special.

The request and petition are **DISMISSED**.

A grantable request to participate in the PPH program and petition to make special require:

(1) The U.S. application must validly claim priority under 35 U.S.C. 119(a) to one or more applications filed in the JPO;
(2) Applicant must submit a copy of the allowable/patentable claim(s) from the JPO application(s) along with an English translation thereof and a statement that the English translation is accurate;
(3) All the claims in the U.S. application must sufficiently correspond or be amended to sufficiently correspond to the allowable/patentable claim(s) in the JPO application(s);
(4) Examination of the U.S. application has not begun;
(5) Applicant must submit a copy of all the office actions from each of the JPO application(s) containing the allowable/patentable claim(s) along with an English translation thereof and a statement that the English translation is accurate;
(6) Applicant must submit an IDS listing the documents cited by the JPO examiner in the JPO office action along with copies of documents except U.S. patents or U.S. patent application publications; and

The request to participate in the PPH program and petition is deficient as follows:

Petitioner has not complied with item 6 above in that an IDS listing the documents cited by the JPO examiner in the JPO office action along with copies of the documents have not been

submitted. In the JPO office action mailed September 18, 2009, two documents, Japanese Patent Application Laid-open No. 2005-12623 and 2006-295857, were cited. An IDS listing these documents along with copies thereof must be submitted.

Applicant is given a time period of **ONE MONTH or THIRTY DAYS**, whichever is longer, from the mailing date of this decision to correct the deficiencies. **NO EXTENSION OF TIME UNDER 37 CFR 1.136 IS PERMITTED.** If the deficiencies are not corrected with the time period given, the application will await action in its regular turn.

Any response must be submitted via EFS-web.

Telephone inquiries concerning this decision should be directed to Michael Horabik at 571-272-3068.

All other inquiries concerning the examination or status of the application should be directed to Patent Application Information Retrieval (PAIR) system.

/Michael Horabik/

Michael Horabik
Quality Assurance Specialist
Technology Center 2600
Communications

PTO/SB/130 (03-08)
Approved for use through 06/30/2008. OMB 0651- 0031
U.S. Patent and Trademark Office; U.S. DEPARTMENT OF COMMERCE
Under the Paperwork Reduction Act of 1995, no persons are required to respond to a collection of information unless it contains a valid OMB control number

PETITION TO MAKE SPECIAL BASED ON AGE FOR ADVANCEMENT OF EXAMINATION UNDER 37 CFR 1.102(c)(1)

Application Information

Application Number	12114452	Confirmation Number	3103	Filing Date	2008-05-02
Attorney Docket Number (optional)	17643	Art Unit		Examiner	TBA
First Named Inventor	Stanley G. Stratton				
Title of Invention	High SRI Cementitious Systems for Colored Concrete				

Attention: Office of Petitions

An application may be made special for advancement of examination upon filing of a petition showing that the applicant is 65 years of age, or more. No fee is required with such a petition. See 37 CFR 1.102(c)(1) and MPEP 708.02 (IV).

APPLICANT HEREBY PETITIONS TO MAKE SPECIAL FOR ADVANCEMENT OF EXAMINATION IN THIS APPLICATION UNDER 37 CFR 1.102(c)(1) and MPEP 708.02 (IV) ON THE BASIS OF THE APPLICANT'S AGE.

A grantable petition requires one of the following items:
(1) Statement by one named inventor in the application that he/she is 65 years of age, or more; or
(2) Certification by a registered attorney/agent having evidence such as a birth certificate, passport, driver's license, etc. showing one named inventor in the application is 65 years of age, or more.

Name of Inventor who is 65 years of age, or older

Given Name	Middle Name	Family Name	Suffix
Pritam	Singh	Dhaliwal	

A signature of the applicant or representative is required in accordance with 37 CFR 1.33 and 10.18.
Please see 37 CFR 1.4(d) for the format of the signature.

Select (1) or (2) :

○ (1) I am an inventor in this application and I am 65 years of age, or more.

◉ (2) I am an attorney or agent registered to practice before the Patent and Trademark Office, and I certify that I am in possession of evidence, and will retain such in the application file record, showing that the inventor listed above is 65 years of age, or more.

Signature	/Kristin C. Hiibner/	Date (YYYY-MM-DD)	2008-06-03
Name	Kristin C. Hiibner	Registration Number	50139

Under the Paperwork Reduction Act of 1995, no persons are required to respond to a collection of information unless it contains a valid OMB control number

Privacy Act Statement

The Privacy Act of 1974 (P.L. 93-579) requires that you be given certain information in connection with your submission of the attached form related to a patent application or patent. Accordingly, pursuant to the requirements of the Act, please be advised that: (1) the general authority for the collection of this information is 35 U.S.C. 2(b)(2); (2) furnishing of the information solicited is voluntary; and (3) the principal purpose for which the information is used by the U.S. Patent and Trademark Office is to process and/or examine your submission related to a patent application or patent. If you do not furnish the requested information, the U.S. Patent and Trademark Office may not be able to process and/or examine your submission, which may result in termination of proceedings or abandonment of the application or expiration of the patent.

The information provided by you in this form will be subject to the following routine uses:

1. The information on this form will be treated confidentially to the extent allowed under the Freedom of Information Act (5 U.S.C. 552) and the Privacy Act (5 U.S.C. 552a). Records from this system of records may be disclosed to the Department of Justice to determine whether the Fr eedom of Information Act requires disclosure of these records.

2. A record from this system of records may be disclosed, as a routine use, in the course of presenting evidence to a court, magistrate, or administrative tribunal, including disclosures to opposing counsel in the course of settlement negotiations.

3. A record in this system of records may be disclosed, as a routine use, to a Member of Congress submitting a request involving an individual, to whom the record pertains, when the individual has requested assistance from the Member with respect to the subject matter of the record.

4. A record in this system of records may be disclosed, as a routine use, to a contractor of the Agency having need for the information in order to perform a contract. Recipients of information shall be required to comply with the requirements of the Privacy Act of 1974, as amended, pursuant to 5 U.S.C. 552a(m).

5. A record related to an International Application filed under the Patent Cooperation Treaty in this system of records may be disclosed, as a routine use, to the International Bureau of the World Intellectual Property Organization, pursuant to the Patent Cooperation Treaty.

6. A record in this system of records may be disclosed, as a routine use, to another federal agency for purposes of National Security review (35 U.S.C. 181) and for review pursuant to the Atomic Energy Act (42 U.S.C. 218(c)).

7. A record from this system of records may be disclosed, as a routine use, to the Administrator, General Services, or his/her designee, during an inspection of records conducted by GSA as part of that agency's responsibility to recommend improvements in records management practices and programs, under authority of 44 U.S.C. 2904 and 2906. Such disclosure shall be made in accordance with the GSA regulations governing inspection of records for this purpose, and any other relevant (i.e., GSA or Commerce) directive. Such disclosure shall not be used to make determinations about indivi duals.

8. A record from this system of records may be disclosed, as a routine use, to the public after either publication of the application pursuant to 35 U.S.C. 122(b) or issuance of a patent pursuant to 35 U.S.C. 151. Further, a record may be disclosed, subject to the limitations of 37 CFR 1.14, as a routine use, to the public if the record was filed in an application which became abandoned or in which the proceedings were terminated and which application is referenced by either a published application, an application open to public inspections or an issued patent.

9. A record from this system of records may be disclosed, as a routine use, to a Federal, State, or local law enforcement agency, if the USPTO becomes aware of a violation or potential violation of law or regulation.

UNITED STATES PATENT AND TRADEMARK OFFICE

Commissioner for Patents
United States Patent and Trademark Office
P.O. Box 1450
Alexandria, VA 22313-1450
www.uspto.gov

In re Application of :
Stanley G. Stratton :

Application No. 12114452 :DECISION ON PETITION TO MAKE SPECIAL
Filed: :UNDER 37 CFR 1.102(c)(1)
:

Attorney Docket No. 17643

This is a decision on the electronic petition under 37 CFR 1.102 (c)(1) ,filed 03-JUN-2008 to make the above-identified application special based on applicant's age as set forth in MPEP § 708.02, Section IV.

The petition is **GRANTED**.

A grantable petition to make an application special under 37 CFR 1.102(c)(1), MPEP § 708.02, Section IV: Applicant's Age must include a statement by applicant or a registered practitioner having evidence that applicant is at least 65 years of age. No fee is required.

Accordingly, the above-identified application has been accorded “special” status and will be taken up for action by the examiner upon the completion of all pre-examination processing.

Telephone inquires concerning this electronic decision should be directed to the Electronic Business Center at 866-217-9197.

All other inquires concerning either the examination or status of the application should be directed to the Technology Center.

UNITED STATES PATENT AND TRADEMARK OFFICE

Commissioner for Patents
United States Patent and Trademark Office
P.O. Box 1450
Alexandria, VA 22313-1450
www.uspto.gov

MAILED

JUN 0 3 2010

OFFICE OF PETITIONS

Collard & Roe, P.C./Leviton
1077 Northern Blvd
Roslyn NY 11576

In re Application of Chan, et al. Application No.: 12/114,465 Filed: May 2, 2008 Attorney Docket No.: CHAN ET AL - 2 For: FAULT CIRCUIT INTERRUPTER WITH BI-DIRECTIONAL SENSING	: : : : : : :	DECISION ACCORDING RULE 47 STATUS TO APPLICATION

This is a decision on the petition under 37 CFR 1.47(a), filed September 19, 2008. The Rule 47(a) petition fee of $200.00 will be charged to deposit account no. 03-2468.

The petition is **GRANTED**.

Petitioners have shown that the non-signing inventor, David Chan, has refused to join in the filing of the above-identified application.

The application and papers have been reviewed and found in compliance with 37 CFR 1.47(a). This application is hereby accorded Rule 1.47(a) status.

As provided in 37 CFR 1.47(c), this Office will forward notice of this application's filing to the non-signing inventor at the address given in the petition. Notice of the filing of this application will also be published in the Official Gazette.

This application is being referred to Technology Center A.U. 2836 for further examination.

Telephone inquiries regarding this decision should be directed to the undersigned at (571) 272-3230.

Shirene Willis Brantley

Shirene Willis Brantley
Senior Petitions Attorney
Office of Petitions

UNITED STATES PATENT AND TRADEMARK OFFICE

Commissioner for Patents
United States Patent and Trademark Office
P.O. Box 1450
Alexandria, VA 22313-1450
www.uspto.gov

HOWISON & ARNOTT, L.L.P
P.O. BOX 741715
DALLAS TX 75374-1715

MAILED
MAR 29 2010
OFFICE OF PETITIONS

In re Application of	:	
Kate Chen	:	
Application No. 12/114,476	:	DECISION ON PETITION
Filed: May 2, 2008	:	
Attorney Docket No. FRND-28,928	:	

This is a decision on the petition under the unintentional provisions of 37 CFR 1.137(b), filed January 11, 2010, to revive the above-identified application.

The petition is **GRANTED**.

This application became abandoned for failure to timely pay the issue and publication fees on or before January 8, 2010, as required by the Notice of Allowance and Fee(s) Due, mailed October 8, 2009. Accordingly, the date of abandonment of this application is January 9, 2010.

The petition satisfies the requirements of 37 CFR 1.137(b) in that petitioner has supplied (1) the reply in the form of payment of the issue fee of $755 and the publication fee of $300, (2) the petition fee of $810; and (3) a proper statement of unintentional delay.

Telephone inquiries concerning this decision should be directed to Terri Johnson at (571) 272-2991.

This application is being referred to the Office of Data Management for processing into a patent.

Terri Johnson
Petitions Examiner
Office of Petitions

UNITED STATES PATENT AND TRADEMARK OFFICE

Commissioner for Patents
United States Patent and Trademark Office
P.O. Box 1450
Alexandria, VA 22313-1450
www.uspto.gov

MORRISON & FOERSTER LLP
12531 HIGH BLUFF DRIVE
SUITE 100
SAN DIEGO, CA 92130

COPY MAILED

SEP 23 2009

OFFICE OF PETITIONS

In re Application of Durbin, Dennis Application No. 12/114,498 Filed: May 2, 2008 Attorney Docket No. ACCM-010/01US (311816-204)	: : : : :	DECISION ON PETITION TO WITHDRAW FROM RECORD

This is a decision on the Request to Withdraw as attorney or agent of record under 37 C.F.R. § 1.36(b), filed July 2, 2009.

The request is **DISMISSED** as involving a moot issue.

A review of the file record indicates that the power of attorney to the attorneys/agents associated with Customer Number 25225 was revoked by the assignee of the patent application on August 26, 2009. Accordingly, the request to withdraw under 37 C.F.R. § 1.36(b) is moot.

All future communications from the Office will be directed to the below-listed address until otherwise properly notified.

Telephone inquires concerning this decision should be directed to the undersigned at 571-272-3206. All other inquires concerning either the examination or status of the application should be directed to the Technology Center.

Liana Walsh
Petitions Examiner
Office of Petitions

cc: COOLEY GODWARD KRONISH LLP
ATTN: PATENT GROUP
SUITE 1100
777 - 6TH STREET, NW
WASHINGTON DC 20001

UNITED STATES PATENT AND TRADEMARK OFFICE

Commissioner for Patents
United States Patent and Trademark Office
P.O. Box 1450
Alexandria, VA 22313-1450
www.uspto.gov

ROBERT J. KAPALKA
TYCO TECHNOLOGY RESOURCES
4550 NEW LINDEN HILL ROAD
SUITE 140
WILMINGTON, DE 19808

COPY MAILED

MAY 14 2009

OFFICE OF PETITIONS

In re Application of Cole et al. :
Application No. 12/114,503 : Decision on Petition
Filing Date: May 2, 2008 :
Attorney Docket No. E-CC-00688 (958-2292) :

This is a decision on the petition under 37 CFR 1.137(b), filed February 26, 2009, to revive the above-identified application.

The petition is **granted**.

The above-identified application became abandoned for failure to reply in a timely manner to the Notice to File Missing Parts of Nonprovisional Application (Notice) mailed June 19, 2008. The Notice set a period for reply of two (2) months from the mail date of the Notice. An extension of time under the provisions of 37 CFR 1.136(a) was not obtained. Accordingly, the application became abandoned on August 20, 2008. A Notice of Abandonment was mailed on February 19, 2009.

The instant petition requests revival of the application.

A grantable petition under 37 CFR 1.137(b) must be accompanied by:

(1) the reply required to the outstanding Office action or notice, unless previously filed,
(2) the petition fee,
(3) a statement that the entire delay in filing the required reply from the due date for the reply until the filing of a grantable petition pursuant to 37 CFR 1.137(b) was unintentional, and
(4) a terminal disclaimer and fee if the application was filed on or before June 8, 1995 or if the application is a design application.

As to item (1), petitioner has filed a reply to the Notice to File Missing Parts.

As to item (2), petitioner has submitted the petition fee.

As to item (3), petitioner has stated the entire delay in filing the required reply from the due date for the reply until the filing of a grantable petition pursuant to 37 CFR 1.137(b) was unintentional. However, the petition is signed by Jason Gross, who was not an attorney or agent at the time the application became abandoned. Therefore, it appears Attorney Gross may not have been in a position to have firsthand or direct knowledge of the facts and circumstances of the delay. Nevertheless, the statement by Attorney Gross that the entire delay was unintentional is being treated as having been made as the result of a reasonable inquiry into the facts and circumstances of such delay.[1] In the event that such an inquiry has not been made, petitioner must make such an inquiry. If such inquiry results in the discovery that a portion of the delay from the due date for the reply until the filing of a grantable petition pursuant to 37 CFR 1.137(b) was intentional, petitioner must notify the Office.

As to item (4), a terminal disclaimer is unnecessary since the application is a utility application filed after June 8, 1995.

Since all the requirements set forth in 37 CFR 1.137(b) have been met, the application is hereby revived.

The Office notes the address on the petition is different than the address designated in the executed declaration. The address on the declaration has been entered as the address of record. If appropriate, a request to change the address of record should be filed. A courtesy copy of this decision is being mailed to the address given on the petition; however, the Office will mail all future correspondence solely to the address of record.

The Office of Patent Application Processing will be informed of the instant decision and will prepare the application for processing in due course.

Telephone inquiries regarding this communication should be directed to Petitions Attorney Steven Brantley at (571) 272-3203.

Charles Steven Brantley
Senior Petitions Attorney
Office of Petitions

cc: Jason P. Gross
The Small Patent Law Group LLP
Suite 725
225 S. Meramec
St. Louis, MO 63105

[1] See Changes to Patent Practice and Procedure, 62 *Fed. Reg.* at 53160 and 53178; 1203 *Off. Gaz. Pat. Office* at 88 and 103 (responses to comments 64 and 109) (applicant obligated under 37 CFR 10.18 to inquire into the underlying facts and circumstances when providing the statement required by 37 CFR 1.137(b) to the Patent and Trademark Office).

UNITED STATES PATENT AND TRADEMARK OFFICE

Commissioner for Patents
United States Patent and Trademark Office
P.O. Box 1450
Alexandria, VA 22313-1450
www.uspto.gov

LATIMER INTELLECTUAL PROPERTY LAW, LLP
P.O. BOX 711200
HERNDON, VA 20171

MAILED

JUN 1 0 2010

OFFICE OF PETITIONS

In re Application of	:	DECISION ON PETITION
Zhang et al.	:	TO WITHDRAW
Application No. 12/114,507	:	FROM RECORD
Filed: May 2, 2008	:	
Attorney Docket: VTIP-130	:	

This is a decision on the Request to Withdraw as attorney or agent of record under 37 C.F.R. § 1.36(b), filed April 21, 2010.

The request is **NOT APPROVED** because it is moot.

A review of the file record indicates that Latimer Intellectual Property Law, LLP was revoked as power of attorney by the assignee of the patent application on April 22, 2010. Accordingly, the request to withdraw under 37 C.F.R. § 1.36(b) is moot.

All future communications from the Office will continue to be directed to the below-listed address until otherwise notified by applicant.

A courtesy copy of this decision is being mailed to the address given on the petition; however, the Office will mail all future correspondence solely to the address of record.

Telephone inquires concerning this decision should be directed to the undersigned at 571-272- 6059.

A. Kelley

Alicia Kelley
Petitions Examiner
Office of Petitions

cc: NEW RIVER VALLEY INTELLECTUAL PROPERTY LAW
P.O. BOX 10944
BLACKSBURG, VA 24062

cc: MATTHEW T. LATIMER
13873 PARK CENTER ROAD, SUITE 106
HERNDON, VA 20171

UNITED STATES PATENT AND TRADEMARK OFFICE

UNITED STATES DEPARTMENT OF COMMERCE
United States Patent and Trademark Office
Address: COMMISSIONER FOR PATENTS
P.O. Box 1450
Alexandria, Virginia 22313-1450
www.uspto.gov

APPLICATION NO.	FILING DATE	FIRST NAMED INVENTOR	ATTORNEY DOCKET NO.	CONFIRMATION NO.
12/114,549	05/02/2008	Henry Esmond Butterworth	GB920080133US1 (163-242)	3323

49267 7590 12/03/2008
KEUSEY, TUTUNJIAN & BITETTO, P.C.
20 CROSSWAYS PARK NORTH, SUITE 210
WOODBURY, NY 11797

EXAMINER

ART UNIT	PAPER NUMBER
2113	

MAIL DATE	DELIVERY MODE
12/03/2008	PAPER

Please find below and/or attached an Office communication concerning this application or proceeding.

The time period for reply, if any, is set in the attached communication.

UNITED STATES PATENT AND TRADEMARK OFFICE

Commissioner for Patents
United States Patent and Trademark Office
P.O. Box 1450
Alexandria, VA 22313-1450
www.uspto.gov

KEUSEY, TUTUNJIAN & BITETTO, P.C.
20 CROSSWAYS PARK NORTH, SUITE 210
WOODBURY, NY 11797

11/26/08

In re Application of: BUTTERWORTH, et al.
Serial No.: 12/114,549
Filed: May 2, 2008
Docket: GB920080133US1
Title: SYSTEMS AND METHODS FOR IMPLEMENTING FAULT TOLERANT DATA PROCESSING SERVICES

DECISION ON PETITION TO MAKE SPECIAL FOR NEW APPLICATION UNDER 37 C.F.R. § 1.102 & M.P.E.P. § 708.02

This is a decision on the petition filed on May 2, 2008 to make the above-identified application special for accelerated examination procedure under 37 C.F.R. § 1.102(d).

The petition to make the application special is **DISMISSED**.

REGULATION AND PRACTICE

A grantable petition to make special under 37 C.F.R. § 1.102(d) and pursuant to the "Change to Practice for Petitions in Patent Applications to Make Special and for Accelerated Examination" published in the Federal Register on June 26, 2006 (71 Fed. Reg. 36323), must satisfy the following conditions:

I. Conditions Regarding the Application:

1. the application must be a non-reissue utility or design application filed under 37 CFR 1.111(a);

2. the application, the petition and the required fees must be filed electronically using the USPTO's electronic filing system (EFS), or EFS-web; if not filed electronically, a statement asserting that EFS and EFS-web were not available during the normal business hours.

3. at the time of filing, the application must be complete under 37 CFR 1.51 and in condition for examination;

4. the application must contain three or fewer independent claims and twenty or fewer total claims and the claims must be directed to a single invention.

II. Conditions Regarding the Petition:

The petition must:

1. be filed with the application;

2. include a statement that applicant agrees that the dependent claims will be grouped together with and not to separately argue the patentability of any independent claim from which they depend during any appeal in the application;

3. include a statement that applicant agrees to make an election without traverse in a telephone interview.

4. include a statement that applicant agrees to conduct such an interview when requested by the examiner.

5. include a statement, made based on a good faith belief, that a preexamination search in compliance with the following requirements, was conducted, including an identification of the field of search by United States class and subclass, where applicable, and for database searches, the search logic or chemical structure or sequence used as a query, the name of the file(s) searched and the database service, and the date of the search.

The preexamination search must:

5.1 involve U.S. patents and patent application publications, foreign patent documents, and non-patent literature, unless the applicant can justify with reasonable certainty that no references more pertinent than those already identified are likely to be found in the eliminated sources and includes such a justification with this statement;

5.2. be directed to the claimed invention and encompass all of the features of the claims, giving the claims the broadest reasonable expectation;

5.3. encompass the disclosed features that may be claimed.

6. must provide in support of the petition an accelerated examination support document. An accelerated examination support document must include:

6.1. an information disclosure statement (IDS) in compliance with 37 CFR 1.98 citing each reference deemed most closely related to the subject matter of each of the claims;

6.2. an identification of all the limitations in the claims that are disclosed by the reference specifying where the limitation is disclosed in the cited reference;

6.3. a detailed explanation of how each of the claims are patentable over the references cited with particularity required by 37 CFR 1.111(b) and (c);

6.4. a concise statement of the utility of the invention as defined in each of the independent claims (unless the application is a design application);

6.5. a showing of where each limitation of the claims finds support under 35 USC 112, first paragraph, in the written description of the specification. If applicable, the showing must also identify: (1) each means- (or step) plus-function claim element that invokes consideration under 35 UDC 112, sixth paragraph; and (2) the structure, material, or acts in the specification that corresponds to each means- (or step) plus-function claim element that invokes consideration under 35 UDC 112, sixth paragraph; if the application claims the benefit of one or more applications under title 35, United States Code, the showing must also include where each limitation of the claims finds support under 35 USC 112, first paragraph, in each such application in which such supports exists;

6.6. an identification of any cited references that may be disqualified under 35 USC 103(c).

REVIEW OF FACTS

The conditions I. 1-4 & II. 1-5.1, 6.1-6.4 & 6.6 above are considered to have been met. However, the petition fails to comply with conditions II. 5.2 - 5.3 & 6.5 above. Therefore, the petition fails to meet the required conditions to be accorded special status under the accelerated examination procedure.

Regarding the requirement of MPEP § 708.02(a)(I.)(H)[1] and items 5.2 - 5.3 above, the preexam search must be directed to the (instant) claimed invention and encompass all of the disclosed features of the (instant) claims.

Specifically and with respect to items 5.2 - 5.3 above, In light of the enormous classification search field identified (class 707 and 714, all subclasses) on page 1 of the Search Document, Petitioner is required to identify whether the text search logic identified in the instant petition was utilized in combination with the field of search) or separate therefrom (e.g. state whether or not the identified subclasses were searched in their entirety). Thus, the petition does not meet the conditions II. 5.2 and 5.3 above.

With respect to the requirement of MPEP § 708.02(a)(I.)(I)(5) and item 6.5 above, Petitioner fails to identify where each limitation of the instant claims finds support under 35 USC 112, first paragraph, in the written description of the specification. Support for each limitation of each pending claim must be properly identified (by page, line or paragraph and/or figure reference numeral). Specifically, reference is made to Petitioner's ***general*** allegation that support in the disclosure under 35 USC 112, first paragraph, is found "at least in FIGs. 2, 3, 4, 5A and 5B of the application and corresponding text from pages 11-21". For instance, support for the recitations "the data processing service comprises a data access service and data storage service" and "isolated processes co-located in a replicated fault tolerant context over the computing nodes" cannot be found. MPEP 2162 is reproduced below:

> **2162 Policy Underlying 35 U.S.C. 112, First Paragraph**
> To obtain a valid patent, a patent application must be filed that contains a full and clear disclosure of the invention in the manner prescribed by 35 U.S.C. 112, first paragraph. The requirement for an adequate disclosure ensures that the public receives something in return for the exclusionary rights that are granted to the inventor by a patent. The grant of a patent helps to foster and enhance the development and disclosure of new ideas and the advancement of scientific knowledge. Upon the grant of a patent in the U.S., information contained in the patent becomes a part of the information available to the public for further research and development, subject only to the patentee's right to exclude others during the life of the patent.
> In exchange for the patent rights granted, 35 U.S.C. 112, first paragraph, sets forth the minimum requirements for the quality and quantity of information that must be contained
>
> in the patent to justify the grant. As discussed in more detail below, the patentee must disclose in the patent sufficient information to put the public in possession of the invention and to enable those skilled in the art to make and use the invention. The applicant must not conceal from the public the best way of practicing the invention that was known to the patentee at the time of filing the patent application. Failure to fully comply with the disclosure requirements could result in the denial of a patent, or in a holding of invalidity of an issued patent.

[1] MPEP 8th ed. rev 5 August 2006

The requirement of MPEP § 708.02(a)(I.)(I)(5) and item II. 6.5 above clearly states that the petitioner is required to **specifically identify corresponding elements in the figures** and **specifically identify where the corresponding written description in the cited portions of the instant specification** can find support under 35 U.S.C. § 112, first paragraph **for each limitation of claim 1**. It is pointed out that the written description requirement has several policy objectives. The essential goal of the description of the invention requirement is to clearly convey the information that an applicant has invented the subject matter which is claimed. Another objective is to put the examiner in possession of what the applicant claims as the invention – the written description requirement implements the principle that a patent application must describe the technology that is sought to be patented; the requirement serves both to satisfy the inventor's obligation to disclose the technologic knowledge upon which the application is based and to demonstrate that the applicants were in possession of the invention that is claimed. Further, the written description requirement promotes the progress of expedite examination by ensuring that applicants adequately describe their inventions in sufficient detail in their applications in exchange for the right to take-up out of order of examination. Thus, a general statement that all limitations of claim(s) can be found without specifically identifying the claim language does not meet the requirement of MPEP § 708.02(a)(I.)(I)(5) and item II. 6.5 above.

Clarification and identification of support for each limitation in the claim is required.

Thus, the petition does not meet the conditions II. 5.2-5.3 and 6.5 above.

DECISION

For the above-stated reasons, the petition is **DISMISSED**. The application will therefore be taken up by the examiner for action in its regular turn.

Petitioner is given ***a single opportunity*** to perfect the petition. Any request for reconsideration of this decision must be submitted within 1 (one) month or 30 (thirty) days, whichever is longer, (no extension of time under 37 CFR 1.136(a) is permitted) from the date of this decision in order to be considered timely. Any request for reconsideration ***must fully address all of the deficiencies indicated above***. [emphasis added]

Petitioner is reminded that, upon granting of the special status of the application on request for reconsideration, the application will be processed expeditiously. However, due to the dismissal of the instant petition, examination may not be completed within twelve months of the filing date of the application.

Any inquiry regarding this decision should be directed to Brian Johnson, Quality Assurance Specialist, at (571) 272-3595. If attempts to reach the undersigned by telephone are unsuccessful, Kakali Chaki, Quality Assurance Specialist, can be reached at (571) 272-3719.

Brian L. Johnson
Quality Assurance Specialist, WG 2110
Technology Center 2100

UNITED STATES PATENT AND TRADEMARK OFFICE

UNITED STATES DEPARTMENT OF COMMERCE
United States Patent and Trademark Office
Address: COMMISSIONER FOR PATENTS
P.O. Box 1450
Alexandria, Virginia 22313-1450
www.uspto.gov

APPLICATION NO.	FILING DATE	FIRST NAMED INVENTOR	ATTORNEY DOCKET NO.	CONFIRMATION NO.
12/114,549	05/02/2008	Henry Esmond Butterworth	GB920080133US1 (163-242)	3323

49267 7590 01/07/2009
KEUSEY, TUTUNJIAN & BITETTO, P.C.
20 CROSSWAYS PARK NORTH, SUITE 210
WOODBURY, NY 11797

EXAMINER

ART UNIT	PAPER NUMBER
2113	

MAIL DATE	DELIVERY MODE
01/07/2009	PAPER

Please find below and/or attached an Office communication concerning this application or proceeding.

The time period for reply, if any, is set in the attached communication.

UNITED STATES PATENT AND TRADEMARK OFFICE

Commissioner for Patents
United States Patent and Trademark Office
P.O. Box 1450
Alexandria, VA 22313-1450
www.uspto.gov

1/05/2009

KEUSEY, TUTUNJIAN & BITETTO, P.C.
20 CROSSWAYS PARK NORTH
SUITE 210
WOODBURY, NY 11797

In re Application of: BUTTERWORTH, et al.
Serial No.: 12/114,549
Filed: May 02, 2008
Docket: GB920080133US1

Title: SYSTEMS AND METHODS FOR IMPLEMENTING FAULT TOLERANT DATA PROCESSING SYSTEMS

DECISION ON PETITION TO MAKE SPECIAL FOR NEW APPLICATION UNDER 37 C.F.R. § 1.102 & M.P.E.P. § 708.02

This is a decision on the renewed petition filed on December 31, 2008 to make the above-identified application special for accelerated examination procedure under 37 C.F.R. § 1.102(d). The original petition, submitted on May 2, 2008 was dismissed in the decision mailed on December 03, 2008.

The petition to make the application special is **GRANTED**.

The application is eligible for accelerated examination and the petition complies with the conditions for granting the application special status pursuant to the "Change to Practice for Petitions in Patent Applications to Make Special and for Accelerated Examination" published June 26, 2006, in the Federal Register. (71 Fed. Reg. 36323).

The prosecution of the instant application will be conducted expeditiously according to the following guidelines.

1. The application will be docketed to an examiner and taken up for action within two weeks of the date of this decision.

2. Restriction Practice:
   If the examiner determines that the claims are not directed to a single invention, a telephone request to elect one single invention will be made pursuant to MPEP 812.01. As a prerequisite to the grant of this petition, the applicant has agreed to make an oral election, by telephone, without traverse. If the applicant refuses to make an election without traverse, or the examiner cannot reach the applicant after a reasonable effort, the

examiner will treat the first claimed invention (invention defined by claim 1) as having being constructively elected without traverse for examination.

3. Office action:
If it is determined that, after appropriate consultation, there is a potential rejection or any other issue to be addressed, the examiner will telephone the applicant and arrange an interview to discuss and resolve the issue. An Office action, other than a Notice of Allowance and Fee(s) Due (Notice of Allowance), will not be issued unless either: 1) an interview was conducted but did not result in agreed to action that places the application in condition for allowance, or, 2) a determination is made that an interview would be unlikely to result in the application being placed in condition for allowance, and 3) an internal conference has been held to review any rejection of any claim.

4. Time for Reply:
An Office action other than a Notice of Allowance or a final Office action will set a shortened statutory period of one month or thirty days, whichever is longer, for reply with no extension of time available under 37 CFR 1.136(a). Failure to timely file a reply within this non-extendible period for reply will result in the abandonment of the application.

5. Reply by Applicant:
A timely reply to an Office action other than the Notice of Allowance must be submitted electronically via EFS or EFS-web and limited to addressing the rejections, objections and requirement made. Any amendment that attempts to: 1) add claims which would result in more than three pending independent claims or more than twenty pending total claims; 2) present claims not encompassed by the pre-examination search or an updated accelerated examination support document; or 3) present claims that are directed a non-elected invention or an invention other than that previously claimed and examined in the application, will be treated as not fully responsive and will not be entered.

   For any amendment to the claims (including any new claim) that is not encompassed by the accelerated examination support document, applicant must provide an updated accelerated examination support document that encompasses the amended or new claims at the time of filing of the amendment.

   To proceed expeditiously with the examination, it is recommended that a reply with amendments made to any claim or with any new claim being added be accompanied by an updated accelerated examination support document or a statement explaining how the amended or new claim is supported by the original accelerated examination support document.

6. Information Disclosure Statement (IDS):
Any IDS filed during prosecution must be submitted electronically via EFS or EFS-web, accompanied by an updated accelerated examination support document, and be in compliance with 37 CFR 1.97 and 1.98.

7. Post-Allowance Processing:
To expedite processing of the allowed application into a patent, the applicant must: 1) pay the required fees within one month of the date of the Notice of Allowance, and 2) not

file any post allowance papers not required by the Office. In no event may the issue fee be paid and accepted later than three months from the date of the Notice of Allowance.

8. After-Final and Appeal Procedures:
   To expedite prosecution, after receiving the final Office action, applicant must: 1) promptly file a notice of appeal, an appeal brief and appeal fees; and 2) not request a pre-appeal brief conference.

   Any amendment, affidavit or other evidence filed after final Office action must comply with applicable rules and the requirements outlined in numbered paragraphs 5 and 6 above.

   On appeal, the application will proceed according to normal appeal procedures. After appeal, the application will again be treated special.

9. Proceedings Outside the Normal Examination Process:
   If the application becomes involved in a proceeding that is outside the normal examination process (e.g., a secrecy order, national security review, interference proceeding, petitions under 37 CFR 1.181, 182 or 183), the application will be treated special before and after such proceeding.

10. Final Disposition:
    The twelve-month goal of this accelerated examination procedure ends with a final disposition. The mailing of a final Office action, a Notice of Allowance, the filing of a Notice of Appeal, or the filing of a Request for Continued Examination (RCE) is the final disposition.

If, during prosecution, a paper is not filed electronically using EFS-web, a reply is filed but is not fully responsive, the application is involved in an appeal, or a proceeding outside normal examination process, the application will still be examined expeditiously, however, the final disposition may occur more than twelve months from the filing of the application. In addition, Applicant is reminded that due to the dismissal of the previous petition submission, examination may not be completed within twelve months of the filing date of the application.

Any inquiry regarding this decision should be directed to Brian Johnson, Quality Assurance Specialist, at (571) 272-3595. If attempts to reach the undersigned by telephone are unsuccessful, Kakali Chaki, Quality Assurance Specialist, can be reached at (571) 272-3719.

Brian Johnson, WQAS 2110
Technology Center 2100
Computer Architecture, Software and Information Security

UNITED STATES PATENT AND TRADEMARK OFFICE

UNITED STATES DEPARTMENT OF COMMERCE
United States Patent and Trademark Office
Address: COMMISSIONER FOR PATENTS
P.O. Box 1450
Alexandria, Virginia 22313-1450
www.uspto.gov

TEXAS INSTRUMENTS INCORPORATED
P O BOX 655474, M/S 3999
DALLAS, TX 75265

Mail Date: 07/14/2010

Applicant	: Chi Tsung Lee	: DECISION ON REQUEST FOR
Patent Number	: 7650255	: RECALCULATION of PATENT
Issue Date	: 01/19/2010	: TERM ADJUSTMENT IN VIEW
Application No	: 12/114,551	: OF WYETH AND NOTICE OF INTENT TO
Filed	: 05/02/2008	: ISSUE CERTIFICATE OF CORRECTION

The Request for Recalculation is **GRANTED** to the extent indicated.

The patent term adjustment has been determined to be **0** days. The USPTO will *sua sponte* issue a certificate of correction reflecting the amount of PTA days determined by the recalculation.

Prior to the issuance of the certificate of correction, the USPTO will afford patentee an opportunity to be heard and request reconsideration. Accordingly, patentee has **one month or thirty (30) days**, whichever is longer, to file a request for reconsideration of this patent term adjustment calculation. See 35 U.S.C. 154(b)(3)(B)(ii) and 37 CFR 1.322(a)(4). No extensions of time will be granted under 37 CFR 1.136.

Patentee should use document code PET.OP if electronically filing a request for reconsideration of this patent term adjustment calculation. The patentee must also include the information required by 37 CFR 1.705(b)(2) and the fee required by 37 CFR 1.18(e). If patentee does not file a timely request for reconsideration of this patent term adjustment calculation including the information required by 37 CFR 1.705(b)(2) and the fee required by 37 CFR 1.18(e), the USPTO will issue a certificate of correction reflecting the PTA determination noted above.

Patentee should be aware that in order to preserve the right to review in the United States District Court for the District of Columbia of the USPTO patent term adjustment determination, patentee must ensure that he or she also take the steps required under 35 U.S.C. 154(b)(4)(A) in a timely manner. Nothing in the request for recalculation should be construed as providing an alternative time frame for commencing a civil action under 35 U.S.C. 154(b)(4)(A).

Any questions concerning this decision should be directed to the Office of Patent Legal Administration at 571-272-7702.

UNITED STATES PATENT AND TRADEMARK OFFICE

Commissioner for Patents
United States Patent and Trademark Office
P.O. Box 1450
Alexandria, VA 22313-1450
www.uspto.gov

BRINKS HOFER GILSON & LIONE
P.O. BOX 10395
CHICAGO, IL 60610

MAILED

MAR 3 1 2009

OFFICE OF PETITIONS

In re Application of
Tobias HOGLUND
Application No. 12/114,558
Filed: May 2, 2008
Attorney Docket No. 12400-135

DECISION ON PETITION

This is a decision on the petition under the unintentional provisions of 37 CFR 1.137(b), filed February 27, 2009, to revive the above-identified application.

The petition is **GRANTED**.

The application became abandoned for failure to reply in a timely manner to the Notice to File Missing Parts of Nonprovisional Application (Notice), mailed May 27, 2008. The Notice set a period for reply of two (2) months from the mail date of the Notice. No extensions of time under the provisions of 37 CFR 1.136(a) were obtained. Accordingly, the application became abandoned on July 28, 2008.

The petition satisfies the requirements of 37 CFR 1.137(b) in that petitioner has supplied (1) the reply in the form of replacement drawing; (2) the petition fee of $1620; and (3) the required statement of unintentional delay.

Telephone inquiries concerning this decision should be directed to Diane Goodwyn at (571)272-6735.

This application is being referred to Technology Center AU 2624 for appropriate action by the Examiner in the normal course of business on the reply received February 27, 2009.

Thurman Page
Petitions Examiner
Office of Petitions

UNITED STATES PATENT AND TRADEMARK OFFICE

UNITED STATES DEPARTMENT OF COMMERCE
United States Patent and Trademark Office
Address: COMMISSIONER FOR PATENTS
P.O. Box 1450
Alexandria, Virginia 22313-1450
www.uspto.gov

APPLICATION NO.	FILING DATE	FIRST NAMED INVENTOR	ATTORNEY DOCKET NO.	CONFIRMATION NO.
12/114,561	05/02/2008	Benjamin J. Fletcher	GB920080028US1	3350

78571 7590 07/16/2008
Dillon & Yudell LLP
8911 N. Capital of Texas Hwy
Suite 2110
Austin, TX 78759

EXAMINER
LOUIS JACQUES, JACQUES H

ART UNIT	PAPER NUMBER
2112	

MAIL DATE	DELIVERY MODE
07/16/2008	PAPER

Please find below and/or attached an Office communication concerning this application or proceeding.

The time period for reply, if any, is set in the attached communication.

UNITED STATES PATENT AND TRADEMARK OFFICE

Commissioner for Patents
United States Patent and Trademark Office
P.O. Box 1450
Alexandria, VA 22313-1450
www.uspto.gov

July 15, 2008

Dillon & Yudell LLP
8911 N. Capital of Texas Hwy
Suite 2110
Austin TX 78759

In re Application of: **FLETCHER, et al.**
Serial No.: **12/114,561**
Filed: **May 02, 2008**
Docket: **GB920080028US1**
Title: **TECHNIQUES FOR AVOIDING REDUNDANT TRANSMISSIONS OF DATA DURING MULTIMEDIA MOBILE PHONE COMMUNICATIONS**

DECISION ON PETITION TO MAKE SPECIAL FOR NEW APPLICATION UNDER 37 C.F.R. § 1.102 & M.P.E.P. § 708.02

This is a decision on the petition filed on **May 02, 2008** to make the above-identified application special for accelerated examination procedure under 37 C.F.R. § 1.102(d).

The petition to make the application special is **DISMISSED**.

REGULATION AND PRACTICE

A grantable petition to make special under 37 C.F.R. § 1.102(d) and pursuant to the "Change to Practice for Petitions in Patent Applications to Make Special and for Accelerated Examination" published in the Federal Register on June 26, 2006 (71 Fed. Reg. 36323), must satisfy the following conditions:

I. Conditions Regarding the Application:

1. the application must be a non-reissue utility or design application filed under 37 CFR 1.111(a);

2. the application, the petition and the required fees must be filed electronically using the USPTO's electronic filing system (EFS), or EFS-web; if not filed electronically, a statement asserting that EFS and EFS-web were not available during the normal business hours.

3. at the time of filing, the application must be complete under 37 CFR 1.51 and in condition for examination;

4. the application must contain three or fewer independent claims and twenty or fewer total claims and the claims must be directed to a single invention.

II. Conditions Regarding the Petition:

The petition must:

1. be filed with the application;

2. include a statement that applicant agrees that the dependent claims will be grouped together with and not to separately argue the patentability of any independent claim from which they depend during any appeal in the application;

3. include a statement that applicant agrees to make an election without traverse in a telephone interview.

4. include a statement that applicant agrees to conduct such an interview when requested by the examiner.

5. include a statement, made based on a good faith belief, that a preexamination search in compliance with the following requirements, was conducted, including an identification of the field of search by United States class and subclass, where applicable, and for database searches, the search logic or chemical structure or sequence used as a query, the name of the file(s) searched and the database service, and the date of the search.

The preexamination search must:

5.1 involve U.S. patents and patent application publications, foreign patent documents, and non-patent literature, unless the applicant can justify with reasonable certainty that no references more pertinent than those already identified are likely to be found in the eliminated sources and includes such a justification with this statement;

5.2. be directed to the claimed invention and encompass all of the features of the claims, giving the claims the broadest reasonable expectation;

5.3. encompass the disclosed features that may be claimed.

6. must provide in support of the petition an accelerated examination support document. An accelerated examination support document must include:

6.1. an information disclosure statement (IDS) in compliance with 37 CFR 1.98 citing each reference deemed most closely related to the subject matter of each of the claims;

6.2. an identification of all the limitations in the claims that are disclosed by the reference specifying where the limitation is disclosed in the cited reference;

6.3. a detailed explanation of how each of the claims are patentable over the references cited with particularity required by 37 CFR 1.111(b) and (c);

6.4. a concise statement of the utility of the invention as defined in each of the independent claims (unless the application is a design application);

6.5. a showing of where each limitation of the claims finds support under 35 USC 112, first paragraph, in the written description of the specification. If applicable, the showing must also identify: (1) each means- (or step) plus-function claim element that invokes consideration under 35 USC 112, sixth paragraph; and (2) the structure, material, or acts in the specification that corresponds to each means- (or step) plus-function claim element that invokes consideration under 35 USC 112, sixth paragraph; if the application claims the benefit of one or more applications under title 35, United States Code, the showing must also include where each limitation of the claims finds support under 35 USC 112, first paragraph, in each such application in which such supports exists;

6.6. an identification of any cited references that may be disqualified under 35 USC 103(c).

REVIEW OF FACTS

The conditions I. 1-4 & II. 1-4, 5, 5.1, 6, 6.1, & 6.6 above are considered to have been met. However, the petition fails to comply with conditions II. 5.2, 5.3, 6.2, 6.3, 6.4 & 6.5 above. Therefore, the petition fails to meet the required conditions to be accorded special status under the accelerated examination procedure.

Specifically and with respect to items 5.2-5.3 above, for classification searches, MPEP 719.05 states that a *classification search* is defined as a complete search of all the documents in a particular subclass, and it is not limited by any text query or other means. Petitioner should identify whether the text search logic identified in the instant petition was utilized in combination with the field of search or separate therefrom (i.e. state whether or not the identified subclasses were searched in their entirety). If they were combined, the specific search logic combination should be identified.

The following search areas should have been searched:
US Class **714** (ERROR DETECTION/CORRECTION AND FAULT DETECTION/RECOVERY), Subclasses **748, 749, 751, 758**;
US Class **707** (DATA PROCESSING: DATABASE AND FILE MANAGEMENT OR DATA STRUCTURES), Subclasses **2, 10**;
US Class **370** (MULTIPLEX COMMUNICATIONS), Subclasses **310, 912, and 913**;
US Class **375** (PULSE OR DIGITAL COMMUNICATIONS), Subclasses **224, 228**;
US Class **455** (TELECOMMUNICATIONS), Subclass **67.11**;
US Class **379** (TELEPHONIC COMMUNICATIONS), Subclasses **1.01-1.03, 10.01, 106.01, and 142.15**.

Finally, the following databases should have been included in the search documents:
IBM_TD
DIALOG
INSPEC

The additional search recommendations were confirmed with and recommended by a (primary) examiner in the pertinent art area.

With regard to the requirement of MPEP § 708.02(a)(I.)(I)(2) and item 6.2 above, "(2) For each reference cited, the accelerated examination support document must include an identification of all the limitations in the claims that are disclosed by the reference specifying where the limitation is disclosed in the cited reference." In the instant case, the document fails to provide an identification of *all the limitations in the claims* that are disclosed by the cited references. The document provides an identification of the limitations of **only** Claim 1. No identification of the limitations of claims 2-15 is provided. Correction is required.

With regard to the requirement of MPEP § 708.02(a)(I.)(I)(3) and item 6.3 above, "((3)The accelerated examination support document must include a detailed explanation of how each of the claims are patentable over the references cited with the particularity required by 37 CFR

1.111(b) and (c)." In the instant case, the document fails to provide a detailed explanation of how *each of the claims* are patentable over the cited references. The document provides a general explanation of how only claim 1 is patentable over the cited references by merely reciting a portion of the claim. However, there is no explanation of patentability with respect to claims 2-15 in the instant petition. Correction is required.

With regard to the requirement of MPEP § 708.02(a)(I.)(I)(4) and item 6.4 above, the concise statement of the utility ***must be of the invention as defined in (each of) the independent claim(s)*** i.e. "A method of communicating data..." (claim 1), "A multimedia mobile phone" (claim 6) and "A computer readable medium..." (claim 11). The document only provides a concise statement of utility for the invention as defined in method claim 1. Correction is required.

With respect to the requirement of MPEP § 708.02(a)(I.)(I)(5) and item 6.5 above, Petitioner fails to identify where each limitation <u>of the</u> <u>instant</u> <u>claims</u> finds support under 35 USC 112, first paragraph, in the written description of the specification. Support for each limitation of each pending claim must be properly identified (by page, line or paragraph and/or figure). MPEP 2162 is reproduced below:

> **2162 Policy Underlying 35 U.S.C. 112, First Paragraph**
> To obtain a valid patent, a patent application must be filed that contains a full and clear disclosure of the invention in the manner prescribed by 35 U.S.C. 112, first paragraph.
> The requirement for an adequate disclosure ensures that the public receives something in return for the exclusionary rights that are granted to the inventor by a patent. The grant of a patent helps to foster and enhance the development and disclosure of new ideas and the advancement of scientific knowledge. Upon the grant of a patent in the U.S., information contained in the patent becomes a part of the information available to the public for further research and development, subject only to the patentee's right to exclude others during the life of the patent.
> In exchange for the patent rights granted, 35 U.S.C. 112, first paragraph, sets forth the minimum requirements for the quality and quantity of information that must be contained in the patent to justify the grant. As discussed in more detail below, the patentee must disclose in the patent sufficient information to put the public in possession of the invention and to enable those skilled in the art to make and use the invention. The applicant must not conceal from the public the best way of practicing the invention that was known to the patentee at the time of filing the patent application. Failure to fully comply with the disclosure requirements could result in the denial of a patent, or in a holding of invalidity of an issued patent.

The requirement of MPEP § 708.02(a)(I.)(I)(5) and item II. 6.5 above clearly states that the petitioner is required to **specifically identify corresponding elements in the figures** and **specifically identify where the corresponding <u>written description</u> in the cited portions of the instant specification** can find support under 35 U.S.C. § 112, first paragraph **for each limitation of claim 1**. The document only provides a showing of support under 35 USC 112, 1st only for the method claim 1. For example, the document fails to show support for the "memory", "codes of software components", "a program", "codes of files", "a processor", "computer readable medium", "computer program product".
It is pointed out that the written description requirement has several policy objectives. The essential goal of the description of the invention requirement is to clearly convey the information

that an applicant has invented the subject matter which is claimed. Another objective is to put the examiner in possession of what the applicant claims as the invention – the written description requirement implements the principle that a patent application must describe the technology that is sought to be patented; the requirement serves both to satisfy the inventor's obligation to disclose the technologic knowledge upon which the application is based and to demonstrate that the applicants were in possession of the invention that is claimed. Further, the written description requirement promotes the progress of expedite examination by ensuring that applicants adequately describe their inventions in sufficient detail in their applications in exchange for the right to take-up out of order of examination. Thus, the petition fails to satisfy such a requirement of MPEP § 708.02(a)(I.)(I)(5) and item II. 6.5 above.

Clarification and identification of support for each limitation in all of claims 1-15 is required.

Thus, the petition does not meet the conditions II. 5.2, 5.3, 6.2, 6.3, 6.4 & 6.5 above.

DECISION

For the above-stated reasons, the petition is **DISMISSED**. The application will therefore be taken up by the examiner for action in its regular turn.

Petitioner is given ***a single opportunity*** to perfect the petition. Any request for reconsideration of this decision must be submitted within 1 (one) month or 30 (thirty) days, whichever is longer, (no extension of time under 37 CFR 1.136(a) is permitted) from the date of this decision in order to be considered timely. Any request for reconsideration ***must fully address all of the deficiencies indicated above***. [emphasis added]

Petitioner is reminded that, upon granting of the special status of the application on request for reconsideration, the application will be processed expeditiously. However, due to the dismissal of the instant petition, examination may not be completed within twelve months of the filing date of the application.

Any inquiry regarding this decision should be directed to Brian Johnson, Quality Assurance Specialist, at (571) 272-3595. If attempts to reach the undersigned by telephone are unsuccessful, Kakali Chaki, Quality Assurance Specialist, can be reached at (571) 272-3719.

Brian L. Johnson
Quality Assurance Specialist, WG 2110
Technology Center 2100

UNITED STATES PATENT AND TRADEMARK OFFICE

UNITED STATES DEPARTMENT OF COMMERCE
United States Patent and Trademark Office
Address: COMMISSIONER FOR PATENTS
P.O. Box 1450
Alexandria, Virginia 22313-1450
www.uspto.gov

APPLICATION NO.	FILING DATE	FIRST NAMED INVENTOR	ATTORNEY DOCKET NO.	CONFIRMATION NO.
12/114,561	05/02/2008	Benjamin J. Fletcher	GB920080028US1	3350

78571 7590 12/04/2008
Dillon & Yudell LLP
8911 N. Capital of Texas Hwy
Suite 2110
Austin, TX 78759

EXAMINER
LOUIS JACQUES, JACQUES H

ART UNIT	PAPER NUMBER
2112	

MAIL DATE	DELIVERY MODE
12/04/2008	PAPER

Please find below and/or attached an Office communication concerning this application or proceeding.

The time period for reply, if any, is set in the attached communication.

UNITED STATES PATENT AND TRADEMARK OFFICE

Commissioner for Patents
United States Patent and Trademark Office
P.O. Box 1450
Alexandria, VA 22313-1450
www.uspto.gov

12/03/2008

DILLON & YUDELL LLP
8911 N. CAPITAL OF TEXAS HWY
SUITE 2110
AUSTIN, TX 78759

In re Application of:
FLETCHER, et al.
Serial No.: 12/114,561
Filed: May 2, 2008
Docket: GB920080028US1
Title: TECHNIQUES FOR AVOIDING REDUNDANT TRANSMISSIONS OF DATA DURING MULTIMEDIA MOBILE PHONE COMMUNICATIONS

COMMUNICATION REGARDING ORDER OF EXAMINATION

A decision dismissing the petition to make the above-identified application special for accelerated examination was mailed on July 16, 2008 . The decision set a non-extendable time period of one month or 30 (thirty) days, whichever is longer, from its mailing date to correct the deficiency/deficiencies in the petition.

As of August 18, 2008, the expiry of the period set, neither a reply nor a renewed petition was received. Accordingly, the application is no longer eligible for the accelerated examination program.

The application will remain in its regular status and will be taken up by the examiner for action in its regular turn.

Petitioner is reminded that a single opportunity to perfect the petition is given. Therefore, further petitions for accelerated examination in this application will not be entertained.

Any inquiry regarding this decision should be directed to Brian Johnson, Quality Assurance Specialist, at (571) 272-3595. If attempts to reach the undersigned by telephone are unsuccessful, Kakali Chaki, Quality Assurance Specialist, can be reached at (571) 272-3719.

Brian L. Johnson
Quality Assurance Specialist, WG 2110
Technology Center 2100

UNITED STATES PATENT AND TRADEMARK OFFICE

UNITED STATES DEPARTMENT OF COMMERCE
United States Patent and Trademark Office
Address: COMMISSIONER FOR PATENTS
P.O. Box 1450
Alexandria, Virginia 22313-1450
www.uspto.gov

Yahoo! Inc.
c/o Frommer Lawrence & Haug LLP
745 Fifth Avenue
NEW YORK, NY 10151

Mail Date: 04/21/2010

Applicant	: Charu Tiwari	: DECISION ON REQUEST FOR
Patent Number	: 7668942	: RECALCULATION of PATENT
Issue Date	: 02/23/2010	: TERM ADJUSTMENT IN VIEW
Appliction No	: 12/114,568	: OF WYETH
Filed	: 05/02/2008	:
		:

The Patentee's Request for Recalculation is **DISMISSED.**

This Request is deemed ineligible for consideration for one or more of the following reasons:

(A). The patent for which PTA recalculation is requested is either a design or reissue application or is a reexamination proceeding;

(B). The patent for which PTA recalculation is requested resulted from a utility or plant application filed under 35 USC 111(a) before May 29, 2000 and no CPA filed in the application on/after May 29, 2000;

(C). The patent for which PTA recalculation is requested resulted from an international application in which the international filing date was before May 29, 2000 and no CPA filed in the application on/after May 29, 2000;

(D). The patent for which PTA recalculation is requested issued on/after March 2, 2010;

(E). The Request for Recalculation was filed more than 180 days after the grant date of the patent and the request was not filed within two months of a dismissal of a request for reconsideration of the of the patent term under 37 CFR 1.705(d);

(F). The Request for Recalculation is not solely limited to USPTO pre-Wyeth interpretation of 35 U.S.C. 154(b)(2)(A);

or

(G). A civil action was filed pursuant to 35 U.S.C. 154(b)(4)(A)concerning the same patent at issue in this request.

Patentee may file a reply to this decision dismissing the Request for Recalculation. Patentee must file such reply within one month or thirty days, whichever is longer, of the mail date of the decision dismissing the Request for Recalculation. No fee is required if patentee is asserting in the reply that the dismissal for ineligibility is improper.

Patentee should use document code PET.OP if electronically filing a reply to this dismissal. If the USPTO finds that the request was improperly deemed ineligible, the USPTO will mail applicant a recalculation determination.

Patentee should be aware that in order to preserve the right to review in the United States District Court for the District of Columbia of the USPTO patent term adjustment determination, patentee must ensure that he or she also take the steps required under 35 U.S.C. 154(b)(4)(A). Nothing in the request for recalculation should be construed as providing an alternative time frame for commencing a civil action under 35 U.S.C. 154 (b)(4)(A).

Any questions concerning this decision should be directed to the Office of Patent Legal Administration at 571-272-7702.

UNITED STATES PATENT AND TRADEMARK OFFICE

Commissioner for Patents
United States Patent and Trademark Office
P.O. Box 1450
Alexandria, VA 22313-1450
www.uspto.gov

DYKAS, SHAVER & NIPPER, LLP
P.O. BOX 877
BOISE, ID 83701-0877

COPY MAILED

OCT 0 1 2008

OFFICE OF PETITIONS

In re Application of
KUCHAR, Edward
Application No. 12/114,579
Filed: May 02, 2008
Attorney Docket No. **KUCJ101**

DECISION ON PETITION
TO WITHDRAW
FROM RECORD

This is a decision on the Request to Withdraw as attorney or agent of record under 37 C.F.R. § 1.36(b), filed August 05, 2008.

The request is not approved because it is moot.

A review of the file record indicates that the power of attorney to DYKAS, SHAVER & NIPPER, LLP has been revoked by the applicant of the patent application on August 06, 2008. Accordingly, the request to withdraw under 37 C.F.R. § 1.36(b) is moot.

All future communications from the Office will continue to be directed to the below-listed address until otherwise notified by applicant.

Telephone inquires concerning this decision should be directed to Tredelle Jackson at 571-272-2783.

Tredelle D. Jackson
Paralegal Specialist
Office of Petitions

cc: **EDWARD J. KUCHAR**
PO BOX 5537
BOISE ID 83705

UNITED STATES PATENT AND TRADEMARK OFFICE

Commissioner for Patents
United States Patent and Trademark Office
P.O. Box 1450
Alexandria, VA 22313-1450
www.uspto.gov

LUCE, FORWARD, HAMILTON & SCRIPPS LLP
2050 MAIN STREET, SUITE 60
IRVINE, CA 92614

MAILED

JUN 03 2010

OFFICE OF PETITIONS

In re Application of	:	
John Pham	:	
Application No. 12/114,593	:	DECISION ON PETITION
Filed: May 2, 2008	:	TO WITHDRAW
Attorney Docket No. 37876-10900	:	FROM RECORD
	:	

This is a decision on the Request to Withdraw as attorney or agent of record under 37 C.F.R. § 1.36(b), filed April 20, 2010.

The request is **APPROVED**.

A grantable request to withdraw as attorney/agent of record must be signed by every attorney/agent seeking to withdraw or contain a clear indication that one attorney is signing on behalf of another/others. A request to withdraw will not be approved unless at least 30 (thirty) days would remain between the date of approval and the later of the expiration date of a time to file a response or the expiration date of the maximum time period which can be extended under 37 C.F.R. § 1.136(a).

The request was signed by Peter J. Gluck on behalf of all attorneys of record. All attorneys/agents have been withdrawn. Applicant is reminded that there is no attorney of record at this time.

The correspondence address of record has been changed and the new correspondence address is the address indicated below.

There is an outstanding Office action mailed February 23, 2010 that requires a reply from the applicant.

Telephone inquiries concerning this decision should be directed to Terri Johnson at 571-272-2991.

Terri Johnson
Petitions Examiner
Office of Petitions

cc: **SCILABS NEUTRACEUTICALS, INC.**
17809 GILLETTE AVENUE
IRVINE, CA 92614

UNITED STATES PATENT AND TRADEMARK OFFICE

UNITED STATES DEPARTMENT OF COMMERCE
United States Patent and Trademark Office
Address: COMMISSIONER FOR PATENTS
P.O. Box 1450
Alexandria, Virginia 22313-1450
www.uspto.gov

APPLICATION NUMBER	FILING OR 371(C) DATE	FIRST NAMED APPLICANT	ATTY. DOCKET NO./TITLE
12/114,593	05/02/2008	John Pham	37876-10900

CONFIRMATION NO. 3403

POWER OF ATTORNEY NOTICE

86451
Luce, Forward, Hamilton & Scripps LLP
2050 Main Street, Suite 600
Irvine, CA 92614

OC000000041917419

Date Mailed: 06/03/2010

NOTICE REGARDING CHANGE OF POWER OF ATTORNEY

This is in response to the Power of Attorney filed 04/20/2010.

- The withdrawal as attorney in this application has been accepted. Future correspondence will be mailed to the new address of record. 37 CFR 1.33.

/tsjohnson/

Office of Data Management, Application Assistance Unit (571) 272-4000, or (571) 272-4200, or 1-888-786-0101

UNITED STATES PATENT AND TRADEMARK OFFICE

Commissioner for Patents
United States Patent and Trademark Office
P.O. Box 1450
Alexandria, VA 22313-1450
www.uspto.gov

CHADBOURNE & PARKE, LLP
30 ROCKEFELLER PLAZA
NEW YORK, NY 10112

COPY MAILED

JUL 29 2009

OFFICE OF PETITIONS

In re Application of
John England
Application No. 12/114,674
Filed: May 2, 2008
Attorney Docket No. 17132-031US

ON PETITION

This is a decision on the petition under 37 CFR 1.137(b), filed February 26, 2009, to revive the above-identified application.

The present petition is not signed by an attorney of record. However, in accordance with 37 CFR 1.34(a), the signature of Walter G. Hanchuk appearing on the petition shall constitute a representation to the United States Patent and Trademark Office that he is authorized to represent the particular party on whose behalf he acts.

This application became abandoned for failure to timely file a response to the Notice to File Missing Parts of Non-provisional Application (Notice) mailed May 21, 2008. A Notice of Abandonment was mailed on February 19, 2009.

The petition is **dismissed**.

A grantable petition under 37 CFR 1.137(b) must be accompanied by: (1) the required reply, unless previously filed; (2) the petition fee as set forth in 37 CFR 1.17(m); (3) a statement that the entire delay in filing the required reply from the due date for the reply until the filing of a grantable petition pursuant to 37 CFR 1.137(b) was unintentional[1]; and (4) any terminal disclaimer (and fee as set forth in 37 CFR 1.20(d)) required by 37 CFR 1.137(d). The instant petition lacks item(s) (1).

Petitioner should note that the Notice mailed May 21, 2008 required petitioner to submit a properly signed oath/declaration in compliance with 37 CFR 1.63 and $130 surcharge. Therefore, these items must be submitted before revival can occur.

[1] Where there is a question as to whether either the abandonment or the delay in filing a petition under 37 CFR 1.137 was unintentional, the Commissioner may require additional information. See MPEP 711.03(c)(III)(C) and (D).

Additionally, petitioner must clarify whether or not the above application is being revived solely for purposes of continuity and if the above application should be abandoned in favor of the continuing Application No. 12/340,439.

Any request for reconsideration of this decision must be submitted within **TWO (2) MONTHS** from the mail date of this decision. Extensions of time under 37 CFR 1.136(a) is permitted. The reconsideration request should include a cover letter entitled "Renewed Petition under 37 CFR 1.137(b)." This is **not** a final agency action within the meaning of 5 U.S.C. § 704.

Further correspondence with respect to this matter should be addressed as follows:

By mail: Mail Stop PETITION
Commissioner for Patents
P. O. Box 1450
Alexandria, VA 22313-1450

By hand: U. S. Patent and Trademark Office
Customer Service Window, Mail Stop Petitions
Randolph Building
401 Dulany Street
Alexandria, VA 22314

The centralized facsimile number is (571) 273-8300.

Telephone inquiries concerning this decision should be directed to the undersigned at (571) 272-3226.

Andrea Smith
Petitions Examiner
Office of Petitions

UNITED STATES PATENT AND TRADEMARK OFFICE

Commissioner for Patents
United States Patent and Trademark Office
P.O. Box 1450
Alexandria, VA 22313-1450
www.uspto.gov

CHADBOURNE & PARKE, LLP
30 ROCKEFELLER PLAZA
NEW YORK, NY 10112

COPY MAILED

NOV 19 2009

OFFICE OF PETITIONS

In re Application of John England Application No. 12/114,674 Filed: May 2, 2008 Attorney Docket No. 17132-031US	: : : : :	ON PETITION

This is a decision on the renewed petition under 37 CFR 1.137(b), filed September 21, 2009, to revive the above-identified application.

The present petition is not signed by an attorney of record. However, in accordance with 37 CFR 1.34(a), the signature of Walter G. Hanchuk appearing on the petition shall constitute a representation to the United States Patent and Trademark Office that he is authorized to represent the particular party on whose behalf he acts.

In response to the decision mailed July 29, 2009, petitioner submits the present renewed petition along with a response to the Office action of February 21, 2008.

The renewed petition satisfies the requirements of 37 CFR 1.137(b), in that petitioner has supplied (1) the reply in the form of an amendment/response; (2) the petition fee of $1,620; and (3) a proper statement of unintentional delay, the petition is **GRANTED**.

This application file is being referred to the Office of Patent Application Processing for further processing in accordance with this decision.

Telephone inquiries concerning this decision should be directed to the undersigned at (571) 272-3226.

Andrea Smith
Petitions Examiner
Office of Petitions

UNITED STATES PATENT AND TRADEMARK OFFICE

Commissioner for Patents
United States Patent and Trademark Office
P.O. Box 1450
Alexandria, VA 22313-1450
www.uspto.gov

TOWNSEND AND TOWNSEND AND CREW, LLP
TWO EMBARCADERO CENTER
EIGHTH FLOOR
SAN FRANCISCO, CA 94111-3834

MAILED

MAR 29 2010

OFFICE OF PETITIONS

In re Application of	:	
Todd R Sutton	:	
Application No. 12/114,701	:	DECISION ON PETITION
Filed: May 2, 2008	:	TO WITHDRAW
Attorney Docket No. **WILAN-P00526US1**	:	FROM RECORD

This is a decision on the Request to Withdraw as attorney or agent of record under 37 CFR. § 1.36(b), filed January 25, 2010.

The request is **NOT APPROVED** as moot.

A review of the file record indicates that the power of attorney to attorneys/agents associated with Customer Number 20350 has been revoked by the applicants of the patent application on March 10, 2010. Accordingly, the request to withdraw under 37 CFR § 1.36(b) is moot.

All future communications from the Office will continue to be directed to the below-listed address until otherwise notified by applicant.

Telephone inquires concerning this decision should be directed to the undersigned at 571-272-4584.

JoAnne Burke
Petitions Examiner
Office of Petitions

cc: VOLPE AND KOENIG, P.C.
UNITED PLAZA, SUITE 1600
30 SOUTH 17TH STREET
PHILADELPHIA PA 19103

UNITED STATES PATENT AND TRADEMARK OFFICE

Commissioner for Patents
United States Patent and Trademark Office
P.O. Box 1450
Alexandria, VA 22313-1450
www.uspto.gov

FOLEY & LARDNER LLP
975 PAGE MILL ROAD
PALO ALTO CA 94304

COPY MAILED

AUG 3 1 2009

OFFICE OF PETITIONS

In re Application of	:	
Conley et al.	:	DECISION ON PETITION
Application No. 12/114,706	:	TO WITHDRAW
Filed: May 2, 2008	:	FROM RECORD
Attorney Docket No. 070545-1652	:	

This is a decision on the Request to Withdraw as attorney or agent of record under 37 C.F.R. § 1.36(b), filed July 14, 2009.

The request is **NOT APPROVED** because it is moot.

A review of the file record indicates that on August 25, 2009 the power of attorney to Foley and Lardner LLP was revoked by the assignee of the patent application. Accordingly, the request to withdraw under 37 C.F.R. § 1.36(b) is moot.

All future communications from the Office will be directed to the below-listed address until otherwise notified by applicant.

Telephone inquires concerning this decision should be directed to the undersigned at 571-272- 7751. All other inquires concerning either the examination or status of the application should be directed to the Technology Center.

Joan Olszewski
Petitions Examiner
Office of Petitions

cc: Swiss Tanner, P.C.
P.O. Box 1749
Four Main Street, Suite 100
Los Altos CA 94022

UNITED STATES PATENT AND TRADEMARK OFFICE

Commissioner for Patents
United States Patent and Trademark Office
P.O. Box 1450
Alexandria, VA 22313-1450
www.uspto.gov

HAYES SOLOWAY P.C.
3450 E. SUNRISE DRIVE, SUITE 140
TUCSON, AZ 85718

COPY MAILED

JUN 23 2008

OFFICE OF PETITIONS

In re Application of :
FENG, Derek D. :
Application No. 12/114,708 : DECISION ON PETITION
Filed: May 02, 2008 : TO MAKE SPECIAL UNDER
Attorney Docket No. **FENG 07.01** : 37 CFR 1.102(c)(1)
:

This is a decision on the petition under 37 CFR 1.102(c)(1), filed May 02, 2008, to make the above-identified application special based on applicant's age as set forth in M.P.E.P. § 708.02, Section IV.

The petition is **GRANTED**.

A grantable petition to make an application special under 37 CFR 1.102(c)(1) and MPEP § 708.02, Section IV: Applicant's Age must be accompanied by evidence showing that at least one of the applicants is 65 years of age, or more, such as a birth certificate or a statement by applicant. No fee is required

The instant petition includes a statement by Derek D. Feng attesting that he is over 65 years of age. Accordingly, the above-identified application has been accorded "special" status.

Telephone inquiries concerning this decision should be directed to the undersigned at 571-272-4231.

All other inquiries concerning either the examination or status of the application should be directed to the Technology Center.

This application is being referred to the Office of Initial Patent Examination for processing. This application will be accorded "special" status when pre-examination processing is done.

Michelle R. Eason
Paralegal Specialist
Office of Petitions

UNITED STATES PATENT AND TRADEMARK OFFICE

UNITED STATES DEPARTMENT OF COMMERCE
United States Patent and Trademark Office
Address: COMMISSIONER FOR PATENTS
P.O. Box 1450
Alexandria, Virginia 22313-1450
www.uspto.gov

APPLICATION NO.	FILING DATE	FIRST NAMED INVENTOR	ATTORNEY DOCKET NO.	CONFIRMATION NO.
12/114,719	05/02/2008	Daniel W. Gil	17517CON1(AP)	3701

51957 7590 06/05/2008
ALLERGAN, INC.
2525 DUPONT DRIVE, T2-7H
IRVINE, CA 92612-1599

EXAMINER

ART UNIT	PAPER NUMBER
1614	

MAIL DATE	DELIVERY MODE
06/05/2008	PAPER

Please find below and/or attached an Office communication concerning this application or proceeding.

The time period for reply, if any, is set in the attached communication.

UNITED STATES PATENT AND TRADEMARK OFFICE

Commissioner for Patents
United States Patent and Trademark Office
P.O. Box 1450
Alexandria, VA 22313-1450
www.uspto.gov

51957
Allergan, Inc.
2525 Dupont Drive, T2-7H
Irvine, CA 92612-1599

JUN 0 5 2008

In re Application of	:
Daniel Gil	:
Serial No.: 12/114,719	: PETITION TO MAKE SPECIAL
Filed: May 2, 2008	:
Attorney Docket No.: 17517CON1(AP)	:

This is a decision on the petition filed on May 2, 2008 to make the above-identified application special for accelerated examination procedure under 37 C.F.R. § 1.102(d).

The petition to make the application special is **DENIED**.

REGULATION AND PRACTICE

To be eligible for accelerated examination under 37 C.F.R. § 1.102(d) and pursuant to the "Change to Practice for Petitions in Patent Applications to Make Special and for Accelerated Examination" published in the Federal Register on June 26, 2006 (71 Fed. Reg. 36323), the following conditions must be satisfied:

1. The application must be a **newly** filed non-reissue utility or design application filed under 37 CFR 1.111(a);
2. The application, the petition and the required fees must be filed electronically using the USPTO's electronic filing system (EFS), or EFS-web; if not filed electronically, a statement asserting that EFS and EFS-web were not available during the normal business hours;
3. The application, at the time of filing, must be complete under 37 CFR 1.51 and in condition for examination;
4. The application must contain three or fewer independent claims and twenty or fewer total claims and the claims must be directed to a single invention.

The application as filed is not eligible for the accelerated examination under 37 C.F.R. § 1.102(d) because it is a new application filed electronically, however the application is incomplete as evidenced by the Missing Parts letter mailed May 8, 2008. Therefore, the application is incomplete and does not qualify for accelerated examination. In addition, the

Support document does not identify where in each of the cited references the listed limitations of the claims may be found.

For the above-stated reasons, the petition is denied. The application will therefore be taken up by the examiner for action in its regular turn, when complete.

Any inquiry regarding this decision should be directed to Dave T Nguyen., TQAS, at (571) 272-0731.

Dave Nguyen
TQAS
Technology Center 5000

UNITED STATES PATENT AND TRADEMARK OFFICE

UNITED STATES DEPARTMENT OF COMMERCE
United States Patent and Trademark Office
Address: COMMISSIONER FOR PATENTS
P.O. Box 1450
Alexandria, Virginia 22313-1450
www.uspto.gov

APPLICATION NO.	FILING DATE	FIRST NAMED INVENTOR	ATTORNEY DOCKET NO.	CONFIRMATION NO.
12/114,727	05/02/2008	Daniel W. Gil	17517CON2(AP)	3727

51957 7590 06/05/2008
ALLERGAN, INC.
2525 DUPONT DRIVE, T2-7H
IRVINE, CA 92612-1599

EXAMINER

ART UNIT	PAPER NUMBER
1614	

MAIL DATE	DELIVERY MODE
06/05/2008	PAPER

Please find below and/or attached an Office communication concerning this application or proceeding.

The time period for reply, if any, is set in the attached communication.

UNITED STATES PATENT AND TRADEMARK OFFICE

Commissioner for Patents
United States Patent and Trademark Office
P.O. Box 1450
Alexandria, VA 22313-1450
www.uspto.gov

JUN 0 5 2008

51957
Allergan, Inc.
2525 Dupont Drive, T2-7H
Irvine, CA 92612-1599

In re Application of	:
Daniel Gil	:
Serial No.: 12/114,727	: PETITION TO MAKE SPECIAL
Filed: May 2, 2008	:
Attorney Docket No.: 17517CON2(AP)	:

This is a decision on the petition filed on May 2, 2008 to make the above-identified application special for accelerated examination procedure under 37 C.F.R. § 1.102(d).

The petition to make the application special is **DENIED**.

REGULATION AND PRACTICE

To be eligible for accelerated examination under 37 C.F.R. § 1.102(d) and pursuant to the "Change to Practice for Petitions in Patent Applications to Make Special and for Accelerated Examination" published in the Federal Register on June 26, 2006 (71 Fed. Reg. 36323), the following conditions must be satisfied:

1. The application must be a **newly** filed non-reissue utility or design application filed under 37 CFR 1.111(a);
2. The application, the petition and the required fees must be filed electronically using the USPTO's electronic filing system (EFS), or EFS-web; if not filed electronically, a statement asserting that EFS and EFS-web were not available during the normal business hours;
3. The application, at the time of filing, must be complete under 37 CFR 1.51 and in condition for examination;
4. The application must contain three or fewer independent claims and twenty or fewer total claims and the claims must be directed to a single invention.

The application as filed is not eligible for the accelerated examination under 37 C.F.R. § 1.102(d) because it is a new application filed electronically, however the application is incomplete as evidenced by the Missing Parts letter mailed May 8, 2008. Therefore, the application is incomplete and does not qualify for accelerated examination. In addition, the

Support document does not identify where in each of the cited references the listed limitations of the claims may be found.

For the above-stated reasons, the petition is denied. The application will therefore be taken up by the examiner for action in its regular turn, when complete.

Any inquiry regarding this decision should be directed to Dave T Nguyen., TQAS, at (571) 272-0731.

Dave Nguyen
TQAS
Technology Center 5000

UNITED STATES PATENT AND TRADEMARK OFFICE

Commissioner for Patents
United States Patent and Trademark Office
P.O. Box 1450
Alexandria, VA 22313-1450
www.uspto.gov

PATENTMETRIX
14252 CULVER DR. BOX 914
IRVINE CA 92604

MAILED

SEP 15 2009

OFFICE OF PETITIONS

In re Application of	:	
Mark Allen CALKINS	:	
Application No. 12/114,750	:	DECISION ON PETITION
Filed: May 03, 2008	:	
Attorney Docket No. Kit110.Ord	:	

This is a decision on the petition under the unintentional provisions of 37 CFR 1.137(b), filed July 14, 2009, to revive the above-identified application.

The petition is **DISMISSED**.

Any request for reconsideration of this decision must be submitted within TWO (2) MONTHS from the mail date of this decision. Extensions of time under 37 CFR 1.136(a) are permitted. The reconsideration request should include a cover letter entitled "Renewed Petition under 37 CFR 1.137(b)." This is **not** a final agency action within the meaning of 5 U.S.C. § 704.

The above-identified application became abandoned for failure to reply in a timely manner to the Notice to File Missing Parts of Nonprovisional Application mailed May 20, 2008. The Notice set a period for reply of two (2) months from the mail date of the Notice. No extensions of time under the provisions of 37 CFR 1.136(a) were obtained. Accordingly, the application became abandoned on July 21, 2008.

A grantable petition under 37 CFR 1.137(b) must be accompanied by: (1) the required reply, unless previously filed; (2) the petition fee as set forth in 37 CFR 1.17(m); (3) a statement that the entire delay in filing the required reply from the due date for the reply until the filing of a grantable petition pursuant to 37 CFR 1.137(b) was unintentional; and (4) any terminal disclaimer (and fee as set forth in 37 CFR 1.20(d)) required by 37 CFR 1.137(d). Where there is a question as to whether either the abandonment or the delay in filing a petition under 37 CFR 1.137 was unintentional, the Director may require additional information. See MPEP 711.03(c)(II)(C) and (D). The instant petition lacks item (1).

Petition was not accompanied by all of the required fees. The $130.00 late surcharge fee was not submitted No consideration on the merits can be given that petition until the required fee is received.

Further correspondence with respect to this matter should be addressed as follows:

By Mail: Mail Stop PETITION
Commissioner for Patents
P. O. Box 1450
Alexandria, VA 22313-1450

By hand: U. S. Patent and Trademark Office
Customer Service Window, Mail Stop Petitions
Randolph Building
401 Dulany Street
Alexandria, VA 22314

The centralized facsimile number is **(571) 273-8300.**

Telephone inquiries concerning this decision should be directed to the undersigned at (571) 272-4231.

Michelle R. Eason
Paralegal Specialist
Office of Petitions

UNITED STATES PATENT AND TRADEMARK OFFICE

Commissioner for Patents
United States Patent and Trademark Office
P.O. Box 1450
Alexandria, VA 22313-1450
www.uspto.gov

PATENTMETRIX
14252 CULVER DR. BOX 914
IRVINE CA 92604

COPY MAILED

DEC 08 2009

OFFICE OF PETITIONS

In re Application of	:	
Mark Allen CALKINS	:	
Application No. 12/114,750	:	DECISION ON PETITION
Filed: May 03, 2008	:	
Attorney Docket No. Kit110.Ord	:	

This is a decision on the renewed petition under the unintentional provisions of 37 CFR 1.137(b), filed November 13, 2009, to revive the above-identified application.

The petition is **GRANTED**.

The above-identified application became abandoned for failure to reply in a timely manner to the Notice to File Missing Parts of Nonprovisional Application mailed May 20, 2008. The Notice set a period for reply of two (2) months from the mail date of the Notice. No extensions of time under the provisions of 37 CFR 1.136(a) were obtained. Accordingly, the application became abandoned on July 21, 2008.

The petition satisfies the conditions for revival pursuant to the provisions of 37 CFR 1.137(b) in that (1) the reply in the form of an oath/declaration and required fees; (2) the petition fee of $1,620.00; and (3) the required statement of unintentional delay have been received. Accordingly, the reply to the Notice to File Missing Parts of May 20, 2008 is accepted as having been unintentionally delayed.

Telephone inquiries concerning this decision should be directed to Michelle R. Eason at (571) 272-4231.

The application is being referred to the Office of Patent Application Processing.

Michelle R. Eason
Paralegal Specialist
Office of Petitions

UNITED STATES PATENT AND TRADEMARK OFFICE

Commissioner for Patents
United States Patent and Trademark Office
P.O. Box 1450
Alexandria, VA 22313-1450
www.uspto.gov

In re Application of
Gaston de los Reyes

Application No. 12114751

Filed:

Attorney Docket No. SPF-001BUS

:DECISION ON PETITION TO MAKE SPECIAL
:UNDER 37 CFR 1.102(c)(1)

This is a decision on the electronic petition under 37 CFR 1.102 (c)(1) ,filed 04-MAY-2008 to make the above-identified application special based on applicant's age as set forth in MPEP § 708.02, Section IV.

The petition is **GRANTED**.

A grantable petition to make an application special under 37 CFR 1.102(c)(1), MPEP § 708.02, Section IV: Applicant's Age must include a statement by applicant or a registered practitioner having evidence that applicant is at least 65 years of age. No fee is required.

Accordingly, the above-identified application has been accorded “special” status and will be taken up for action by the examiner upon the completion of all pre-examination processing.

Telephone inquires concerning this electronic decision should be directed to the Electronic Business Center at 866-217-9197.

All other inquires concerning either the examination or status of the application should be directed to the Technology Center.

PTO/SB/130 (03-08)
Approved for use through 05/31/2008. OMB 0651- 0031
U.S. Patent and Trademark Office; U.S. DEPARTMENT OF COMMERCE
Under the Paperwork Reduction Act of 1995, no persons are required to respond to a collection of information unless it contains a valid OMB control number

PETITION TO MAKE SPECIAL BASED ON AGE FOR ADVANCEMENT OF EXAMINATION UNDER 37 CFR 1.102(c)(1)

Application Information

Application Number	12114751	Confirmation Number	3792	Filing Date	2008-05-03
Attorney Docket Number (optional)	SPF-001BUS	Art Unit	1797	Examiner	
First Named Inventor	de los Reyes				
Title of Invention	METHOD AND APPARATUS FOR THE FILTRATION OF BIOLOGICAL SOLUTIONS				

Attention: Office of Petitions

An application may be made special for advancement of examination upon filing of a petition showing that the applicant is 65 years of age, or more. No fee is required with such a petition. See 37 CFR 1.102(c)(1) and MPEP 708.02 (IV).

APPLICANT HEREBY PETITIONS TO MAKE SPECIAL FOR ADVANCEMENT OF EXAMINATION IN THIS APPLICATION UNDER 37 CFR 1.102(c)(1) and MPEP 708.02 (IV) ON THE BASIS OF THE APPLICANT'S AGE.

A grantable petition requires one of the following items:
(1) Statement by one named inventor in the application that he/she is 65 years of age, or more; or
(2) Certification by a registered attorney/agent having evidence such as a birth certificate, passport, driver's license, etc. showing one named inventor in the application is 65 years of age, or more.

Name of Inventor who is 65 years of age, or older

Given Name	Middle Name	Family Name	Suffix
Leon		MIR	

A signature of the applicant or representative is required in accordance with 37 CFR 1.33 and 10.18.
Please see 37 CFR 1.4(d) for the format of the signature.

Select (1) or (2) :

- (●) (1) I am an inventor in this application and I am 65 years of age, or more.
- ( ) (2) I am an attorney or agent registered to practice before the Patent and Trademark Office, and I certify that I am in possession of evidence, and will retain such in the application file record, showing that the inventor listed above is 65 years of age, or more.

Signature	/Leon Mir/	Date (YYYY-MM-DD)	2008-05-04
Name	Leon Mir		

PTO/SB/130 (03-08)
Approved for use through 05/31/2008. OMB 0651- 0031
U.S. Patent and Trademark Office; U.S. DEPARTMENT OF COMMERCE
Under the Paperwork Reduction Act of 1995, no persons are required to respond to a collection of information unless it contains a valid OMB control number

Privacy Act Statement

The Privacy Act of 1974 (P.L. 93-579) requires that you be given certain information in connection with your submission of the attached form related to a patent application or patent. Accordingly, pursuant to the requirements of the Act, please be advised that: (1) the general authority for the collection of this information is 35 U.S.C. 2(b)(2); (2) furnishing of the information solicited is voluntary; and (3) the principal purpose for which the information is used by the U.S. Patent and Trademark Office is to process and/or examine your submission related to a patent application or patent. If you do not furnish the requested information, the U.S. Patent and Trademark Office may not be able to process and/or examine your submission, which may result in termination of proceedings or abandonment of the application or expiration of the patent.

The information provided by you in this form will be subject to the following routine uses:

1. The information on this form will be treated confidentially to the extent allowed under the Freedom of Information Act (5 U.S.C. 552) and the Privacy Act (5 U.S.C. 552a). Records from this system of records may be disclosed to the Department of Justice to determine whether the Fr eedom of Information Act requires disclosure of these records.

2. A record from this system of records may be disclosed, as a routine use, in the course of presenting evidence to a court, magistrate, or administrative tribunal, including disclosures to opposing counsel in the course of settlement negotiations.

3. A record in this system of records may be disclosed, as a routine use, to a Member of Congress submitting a request involving an individual, to whom the record pertains, when the individual has requested assistance from the Member with respect to the subject matter of the record.

4. A record in this system of records may be disclosed, as a routine use, to a contractor of the Agency having need for the information in order to perform a contract. Recipients of information shall be required to comply with the requirements of the Privacy Act of 1974, as amended, pursuant to 5 U.S.C. 552a(m).

5. A record related to an International Application filed under the Patent Cooperation Treaty in this system of records may be disclosed, as a routine use, to the International Bureau of the World Intellectual Property Organization, pursuant to the Patent Cooperation Treaty.

6. A record in this system of records may be disclosed, as a routine use, to another federal agency for purposes of National Security review (35 U.S.C. 181) and for review pursuant to the Atomic Energy Act (42 U.S.C. 218(c)).

7. A record from this system of records may be disclosed, as a routine use, to the Administrator, General Services, or his/her designee, during an inspection of records conducted by GSA as part of that agency's responsibility to recommend improvements in records management practices and programs, under authority of 44 U.S.C. 2904 and 2906. Such disclosure shall be made in accordance with the GSA regulations governing inspection of records for this purpose, and any other relevant (i.e., GSA or Commerce) directive. Such disclosure shall not be used to make determinations about indivi duals.

8. A record from this system of records may be disclosed, as a routine use, to the public after either publication of the application pursuant to 35 U.S.C. 122(b) or issuance of a patent pursuant to 35 U.S.C. 151. Further, a record may be disclosed, subject to the limitations of 37 CFR 1.14, as a routine use, to the public if the record was filed in an application which became abandoned or in which the proceedings were terminated and which application is referenced by either a published application, an application open to public inspections or an issued patent.

9. A record from this system of records may be disclosed, as a routine use, to a Federal, State, or local law enforcement agency, if the USPTO becomes aware of a violation or potential violation of law or regulation.

UNITED STATES PATENT AND TRADEMARK OFFICE

UNITED STATES DEPARTMENT OF COMMERCE
United States Patent and Trademark Office
Address: COMMISSIONER FOR PATENTS
P.O. Box 1450
Alexandria, Virginia 22313-1450
www.uspto.gov

APPLICATION NO.	FILING DATE	FIRST NAMED INVENTOR	ATTORNEY DOCKET NO.	CONFIRMATION NO.
12/114,769	05/03/2008	Lee Lisheng Huang	69290-8002.US01	3823

22918 7590 06/24/2010
PERKINS COIE LLP
P.O. BOX 1208
SEATTLE, WA 98111-1208

EXAMINER

ART UNIT	PAPER NUMBER
3749	

NOTIFICATION DATE	DELIVERY MODE
06/24/2010	ELECTRONIC

Please find below and/or attached an Office communication concerning this application or proceeding.

The time period for reply, if any, is set in the attached communication.

Notice of the Office communication was sent electronically on above-indicated "Notification Date" to the following e-mail address(es):

patentprocurement@perkinscoie.com

UNITED STATES PATENT AND TRADEMARK OFFICE

Commissioner for Patents
United States Patent and Trademark Office
P.O. Box 1450
Alexandria, VA 22313-1450
www.uspto.gov

PERKINS COIE LLP
P.O. BOX 1208
SEATTLE WA 98111-1208

In re Application of	:	
HUANG, LEE LISHENG	:	DECISION ON PETITION
Application No. 12/114,769	:	TO MAKE SPECIAL UNDER
Filed: May 3, 2008	:	THE GREEN TECHNOLOGY
Attorney Docket No. 69290-8002.US01	:	PILOT PROGRAM

This is a decision on the petition under 37 CFR 1.102, filed 06/11/2010, to make the above-identified application special under the pilot program for applications pertaining to Green Technologies as set forth in 74 Federal Register Notice 64666 (December 8, 2009) and amended by 75 Federal Register Notice 28554 (May 21, 2010).

The petition is dismissed.

A grantable petition to make an application special under 37 CFR 1.102 and the pilot program as set forth in 74 FR 64666 must be directed to a nonprovisional application filed under 35 USC 111(a) or be a national stage entry under 35 USC 371, exclusive of any reissue applications and be filed prior to the date of the notice, December 8, 2009.

In order to qualify for special status, the following requirements must be met. 1) The application must have no more than 3 independent claims and no more than 20 total claims. 2) The application must not contain any multiple dependent claims. 3) The petition must state the basis for seeking special status, i.e., the claimed invention either: A) materially enhances the quality of the environment or B) materially contributes to: i) the discovery or development of renewable energy resources, ii) the more efficient utilization and conservation of energy resources, or iii) greenhouse gas emission reduction. 4) If the disclosure is not clear on its face that the claimed invention materially contributes under category (A) or (B), the petition must be accompanied by a statement by the applicant, assignee, or an attorney/agent registered to practice before the Office explaining how the materiality standard is met. 5) A statement that applicant will agree to make an election without traverse in a telephonic interview if a restriction requirement is made by the examiner. 6) The petition to make special must be filed electronically. 7) The petition must be filed at least one day prior to the date that a first Office Action appears in the Patent Application Information Retrieval (PAIR) system. 8) The petition must be accompanied by a request for early publication in compliance with 37 CFR 1.219 and include the publication fee as set forth in 37 CFR 1.18(d).

The requirement for a fee for consideration of the petition to make special for applications pertaining to Green Technologies has been waived.

The petition lacks item(s) #3 and #4.

In regard to item 3, petitioner should note that the instant petition fails to state the basis for the special status (i.e., whether the instant claimed invention (1) materially enhances the quality of the environment or materially contributes to (2) development of renewable energy resources or energy conservation, or (3) greenhouse gas reduction) as required by sections II and III of the notice.

In regard to item 4, petitioner should note that the instant petition includes a statement identifying the basis for the special status (i.e., whether the instant invention (1) materially enhances the quality of the environment or materially contributes to (2) development of renewable energy resources or energy conservation, or (3) greenhouse gas reduction) as required by sections II and III of the notice. However, as stated in the notice, applicant must also provide a statement pertaining to the materiality standard if the application disclosure is not clear on its face as to the materiality of the basis for the special status of the invention. This petition lacks such a statement and it is not agreed that the application on its face meets that materiality standard.

The general statement made in the petition is insufficient because the applicant did not explain how the claimed invention would (1) materially enhances the quality of the environment or materially contributes to (2) development of renewable energy resources or energy conservation, or (3) greenhouse gas reduction. The applicant states that this application meets the materiality standard because "it discloses a highly efficient cookware having heat transfer enhancement features, such as flame guiding channels and guide fins, that reduce natural gas fuel consumption and CO2 emissions during the cooking process." However, the applicant did not explain how such claimed cookware with flame guiding channels would enhance the quality of the environment or materially contributes to (2) development of renewable energy resources or energy conservation, or (3) greenhouse gas reduction or contribute to the development of renewable energy resources or conservation of energy resources.

Any reconsideration of this decision should be submitted through the USPTO electronic filing system, EFS-Web, and selecting the document description of "Petition for Green Tech Pilot" on the EFS-Web screen. The application is being forwarded to the Technology Center Art Unit 3749 for action in its regular turn. Telephone inquires concerning this decision should be directed to Henry Yuen at 571-272-4856.

/Henry Yuen/

Henry Yuen
Quality Assurance Specialist
Technology Center 3700

UNITED STATES PATENT AND TRADEMARK OFFICE

UNITED STATES DEPARTMENT OF COMMERCE
United States Patent and Trademark Office
Address: COMMISSIONER FOR PATENTS
P.O. Box 1450
Alexandria, Virginia 22313-1450
www.uspto.gov

APPLICATION NO.	FILING DATE	FIRST NAMED INVENTOR	ATTORNEY DOCKET NO.	CONFIRMATION NO.
12/114,769	05/03/2008	Lee Lisheng Huang	69290-8002.US01	3823

22918 7590 07/08/2010
PERKINS COIE LLP
P.O. BOX 1208
SEATTLE, WA 98111-1208

EXAMINER

ART UNIT	PAPER NUMBER
3749	

NOTIFICATION DATE	DELIVERY MODE
07/08/2010	ELECTRONIC

Please find below and/or attached an Office communication concerning this application or proceeding.

The time period for reply, if any, is set in the attached communication.

Notice of the Office communication was sent electronically on above-indicated "Notification Date" to the following e-mail address(es):

patentprocurement@perkinscoie.com

UNITED STATES PATENT AND TRADEMARK OFFICE

Commissioner for Patents
United States Patent and Trademark Office
P.O. Box 1450
Alexandria, VA 22313-1450
www.uspto.gov

PERKINS COIE LLP
P.O. BOX 1208
SEATTLE WA 98111-1208

In re Application of	:	
HUANG, LEE LISHENG	:	DECISION ON PETITION
Application No. 12/114,769	:	TO MAKE SPECIAL UNDER
Filed: May 3, 2008	:	THE GREEN TECHNOLOGY
Attorney Docket No. 69290-8002.US01	:	PILOT PROGRAM

This is a decision on the renewed petition under 37 CFR 1.102, filed July 2, 2010, to make the above-identified application special under the pilot program for applications pertaining to Green Technologies as set forth in 74 Federal Register Notice 64666 (December 8, 2009) and amended by 75 Federal Register Notice 28554 (May 21, 2010).

The petition is **GRANTED**.

A grantable petition to make an application special under 37 CFR 1.102 and the pilot program as set forth in 74 FR 64666 must be directed to a nonprovisional application filed under 35 USC 111(a) or be a national stage entry under 35 USC 371, exclusive of any reissue applications and be filed prior to the date of the notice, December 8, 2009.

In order to qualify for special status, the following requirements must be met. 1) The application must have no more than 3 independent claims and no more than 20 total claims. 2) The application must not contain any multiple dependent claims. 3) The petition must state the basis for seeking special status, i.e., the claimed invention either: A) materially enhances the quality of the environment or B) materially contributes to: i) the discovery or development of renewable energy resources, ii) the more efficient utilization and conservation of energy resources, or iii) greenhouse gas emission reduction. 4) If the disclosure is not clear on its face that the claimed invention materially contributes under category (A) or (B), the petition must be accompanied by a statement by the applicant, assignee, or an attorney/agent registered to practice before the Office explaining how the materiality standard is met. 5) A statement that applicant will agree to make an election without traverse in a telephonic interview if a restriction requirement is made by the examiner. 6) The petition to make special must be filed electronically. 7) The petition must be filed at least one day prior to the date that a first Office Action appears in the Patent Application Information Retrieval (PAIR) system. 8) The petition must be accompanied by a request for early publication in compliance with 37 CFR 1.219 and include the publication fee as set forth in 37 CFR 1.18(d).

The requirement for a fee for consideration of the petition to make special for applications pertaining to Green Technologies has been waived.

The instant petition complies with items 1 – 8 above. Accordingly, the above-identified application has been accorded "special" status.

Telephone inquires concerning this decision should be directed to Henry C. Yuen at 571-272-4856.

The application is being forwarded to the Technology Center Art Unit 3749 for action on the merits commensurate with this decision.

/ Henry C. Yuen /

Henry C. Yuen
Quality Assurance Specialist
Technology Center 3700

UNITED STATES PATENT AND TRADEMARK OFFICE

COMMISSIONER FOR PATENTS
UNITED STATES PATENT AND TRADEMARK OFFICE
P.O. BOX 1450
ALEXANDRIA, VA 22313-1450
WWW.USPTO.GOV

Paper No.

SONNENSCHEIN NATH & ROSENTHAL LLP
P.O. BOX 061080
WACKER DRIVE STATION, SEARS TOWER
CHICAGO IL 60606-1080

COPY MAILED

JAN 08 2009

OFFICE OF PETITIONS

In re Application of Nicholas Holt, Christopher B. Cooper, Roger Eugene Frechette III, and William F. Baker, Jr. Application No. 12/114,774 Filed: May 4, 2008 Attorney Docket Number: 07474500-0022 Title: ENERGY EFFICIENT BUILDING	DECISION ON PETITION PURSUANT TO 37 C.F.R. § 1.47(A)

This is in response to the petition pursuant to 37 C.F.R. § 1.47(a), filed November 20, 2008.

This petition pursuant to 37 C.F.R. § 1.47(a) is **GRANTED**.

On May 4, 2008, the application was filed, identifying Roger Frechette and Nicholas Holt as joint inventors. The application was not deposited with an executed declaration. On May 20, 2008, a "Notice to File Missing Parts of Nonprovisional Application - Filing Date Granted" (notice) was mailed, requiring a fully executed oath or declaration and the surcharge associated with the late submission of the same. The notice set a two-month period for response.

A grantable petition pursuant to 37 C.F.R. § 1.47(a) requires:

(1) the petition fee of $200;

(2) a surcharge of either $65 or $130 if the petition is not filed at the time of filing the application, as set forth in 37 C.F.R. § 1.16(e);
(3) a statement of the last known address of the non-signing inventor;
(4) either
  a) proof that a copy of the entire application (specification, claims, drawings, and the oath or declaration) was sent or given to the non-signing inventor for review and proof that the non-signing inventor refuses to join in the application or
  b) proof that the non-signing inventor cannot be found or reached after diligent effort, and;
(5) a declaration which complies with 37 C.F.R. § 1.63.

With this petition, Petitioner has submitted the petition fee, an acceptable declaration that has been executed by each of the joint inventors save Mr. Holt[1] along with the fee that is associated with the late submission of the same, the last known address of the non-signing inventor, and proof that he was provided with a complete copy of the application and that a response has not been forthcoming.[2] Petitioner has further included a four-month extension of time so as to make this response timely.

Each of the requirements of 37 C.F.R. § 1.47(a) has been satisfied.

This application is hereby accorded Rule 1.47(a) status. As provided in Rule 1.47, this Office will forward notice of this application's filing to the non-signing inventor at the address given in the declaration. Notice of the filing of this application will also be published in the Official Gazette.

---

1 Pursuant to 37 C.F.R. § 1.48(f)(1), "[i]f the correct inventor or inventors are not named on filing a nonprovisional application under § 1.53(b) without an executed oath or declaration under § 1.63 by any of the inventors, the first submission of an executed oath or declaration under § 1.63 by any of the inventors during the pendency of the application will act to correct the earlier identification of inventorship."
2 See statement of Mr. Goldsmith, paragraph 7.

The Office of Patent Application Processing (OPAP) will be notified of this decision so that the application may receive further processing.

A corrected filing receipt has been enclosed with this decision.

The general phone number for OPAP is 571-272-4000. Telephone inquiries **regarding this decision** should be directed to the undersigned at (571) 272-3225.[3]

/Paul Shanoski/
Paul Shanoski
Senior Attorney
Office of Petitions

Encl. Corrected Filing Receipt

---

3 Petitioner will note that all practice before the Office should be in writing, and the action of the Office will be based exclusively on the written record in the Office. See 37 C.F.R. § 1.2. As such, Petitioner is reminded that no telephone discussion may be controlling or considered authority for any further action(s) of Petitioner.

PTO/SB/130 (03-08)
Approved for use through 05/31/2008. OMB 0651- 0031
U.S. Patent and Trademark Office; U.S. DEPARTMENT OF COMMERCE
Under the Paperwork Reduction Act of 1995, no persons are required to respond to a collection of information unless it contains a valid OMB control number

PETITION TO MAKE SPECIAL BASED ON AGE FOR ADVANCEMENT OF EXAMINATION UNDER 37 CFR 1.102(c)(1)

Application Information

Application Number	12114807	Confirmation Number	3892	Filing Date	2008-05-04
Attorney Docket Number (optional)	GLA1.007	Art Unit		Examiner	
First Named Inventor	GLATT				
Title of Invention	PANORAMIC IMAGE MANAGEMENT SYSTEM AND METHOD				

Attention: Office of Petitions

An application may be made special for advancement of examination upon filing of a petition showing that the applicant is 65 years of age, or more. No fee is required with such a petition. See 37 CFR 1.102(c)(1) and MPEP 708.02 (IV).

APPLICANT HEREBY PETITIONS TO MAKE SPECIAL FOR ADVANCEMENT OF EXAMINATION IN THIS APPLICATION UNDER 37 CFR 1.102(c)(1) and MPEP 708.02 (IV) ON THE BASIS OF THE APPLICANT'S AGE.

A grantable petition requires one of the following items:
(1) Statement by one named inventor in the application that he/she is 65 years of age, or more; or
(2) Certification by a registered attorney/agent having evidence such as a birth certificate, passport, driver's license, etc. showing one named inventor in the application is 65 years of age, or more.

Name of Inventor who is 65 years of age, or older

Given Name	Middle Name	Family Name	Suffix
OTTO	GREGORY	GLATT	

A signature of the applicant or representative is required in accordance with 37 CFR 1.33 and 10.18.
Please see 37 CFR 1.4(d) for the format of the signature.

Select (1) or (2) :

○ (1) I am an inventor in this application and I am 65 years of age, or more.

◉ (2) I am an attorney or agent registered to practice before the Patent and Trademark Office, and I certify that I am in possession of evidence, and will retain such in the application file record, showing that the inventor listed above is 65 years of age, or more.

Signature	/Michael R. Kahn/	Date (YYYY-MM-DD)	2008-05-04
Name	Michael R. Kahn	Registration Number	53085

PTO/SB/130 (03-08)
Approved for use through 05/31/2008. OMB 0651- 0031
U.S. Patent and Trademark Office; U.S. DEPARTMENT OF COMMERCE
Under the Paperwork Reduction Act of 1995, no persons are required to respond to a collection of information unless it contains a valid OMB control number

Privacy Act Statement

The Privacy Act of 1974 (P.L. 93-579) requires that you be given certain information in connection with your submission of the attached form related to a patent application or patent. Accordingly, pursuant to the requirements of the Act, please be advised that: (1) the general authority for the collection of this information is 35 U.S.C. 2(b)(2); (2) furnishing of the information solicited is voluntary; and (3) the principal purpose for which the information is used by the U.S. Patent and Trademark Office is to process and/or examine your submission related to a patent application or patent. If you do not furnish the requested information, the U.S. Patent and Trademark Office may not be able to process and/or examine your submission, which may result in termination of proceedings or abandonment of the application or expiration of the patent.

The information provided by you in this form will be subject to the following routine uses:

1. The information on this form will be treated confidentially to the extent allowed under the Freedom of Information Act (5 U.S.C. 552) and the Privacy Act (5 U.S.C. 552a). Records from this system of records may be disclosed to the Department of Justice to determine whether the Fr eedom of Information Act requires disclosure of these records.

2. A record from this system of records may be disclosed, as a routine use, in the course of presenting evidence to a court, magistrate, or administrative tribunal, including disclosures to opposing counsel in the course of settlement negotiations.

3. A record in this system of records may be disclosed, as a routine use, to a Member of Congress submitting a request involving an individual, to whom the record pertains, when the individual has requested assistance from the Member with respect to the subject matter of the record.

4. A record in this system of records may be disclosed, as a routine use, to a contractor of the Agency having need for the information in order to perform a contract. Recipients of information shall be required to comply with the requirements of the Privacy Act of 1974, as amended, pursuant to 5 U.S.C. 552a(m).

5. A record related to an International Application filed under the Patent Cooperation Treaty in this system of records may be disclosed, as a routine use, to the International Bureau of the World Intellectual Property Organization, pursuant to the Patent Cooperation Treaty.

6. A record in this system of records may be disclosed, as a routine use, to another federal agency for purposes of National Security review (35 U.S.C. 181) and for review pursuant to the Atomic Energy Act (42 U.S.C. 218(c)).

7. A record from this system of records may be disclosed, as a routine use, to the Administrator, General Services, or his/her designee, during an inspection of records conducted by GSA as part of that agency's responsibility to recommend improvements in records management practices and programs, under authority of 44 U.S.C. 2904 and 2906. Such disclosure shall be made in accordance with the GSA regulations governing inspection of records for this purpose, and any other relevant (i.e., GSA or Commerce) directive. Such disclosure shall not be used to make determinations about indivi duals.

8. A record from this system of records may be disclosed, as a routine use, to the public after either publication of the application pursuant to 35 U.S.C. 122(b) or issuance of a patent pursuant to 35 U.S.C. 151. Further, a record may be disclosed, subject to the limitations of 37 CFR 1.14, as a routine use, to the public if the record was filed in an application which became abandoned or in which the proceedings were terminated and which application is referenced by either a published application, an application open to public inspections or an issued patent.

9. A record from this system of records may be disclosed, as a routine use, to a Federal, State, or local law enforcement agency, if the USPTO becomes aware of a violation or potential violation of law or regulation.

UNITED STATES PATENT AND TRADEMARK OFFICE

Commissioner for Patents
United States Patent and Trademark Office
P.O. Box 1450
Alexandria, VA 22313-1450
www.uspto.gov

In re Application of
OTTO GREGORY GLATT

Application No. 12114807

Filed:

Attorney Docket No. GLA1.007

:DECISION ON PETITION TO MAKE SPECIAL
:UNDER 37 CFR 1.102(c)(1)

This is a decision on the electronic petition under 37 CFR 1.102 (c)(1) ,filed 04-MAY-2008 to make the above-identified application special based on applicant's age as set forth in MPEP § 708.02, Section IV.

The petition is **GRANTED**.

A grantable petition to make an application special under 37 CFR 1.102(c)(1), MPEP § 708.02, Section IV: Applicant's Age must include a statement by applicant or a registered practitioner having evidence that applicant is at least 65 years of age. No fee is required.

Accordingly, the above-identified application has been accorded “special” status and will be taken up for action by the examiner upon the completion of all pre-examination processing.

Telephone inquires concerning this electronic decision should be directed to the Electronic Business Center at 866-217-9197.

All other inquires concerning either the examination or status of the application should be directed to the Technology Center.

UNITED STATES PATENT AND TRADEMARK OFFICE

UNITED STATES DEPARTMENT OF COMMERCE
United States Patent and Trademark Office
Address: COMMISSIONER FOR PATENTS
P.O. Box 1450
Alexandria, Virginia 22313-1450
www.uspto.gov

APPLICATION NO.	FILING DATE	FIRST NAMED INVENTOR	ATTORNEY DOCKET NO.	CONFIRMATION NO.
12/114,808	05/04/2008	Robyn L. Wilson	KW007US	3897

70339 7590 10/15/2008
KELCE WILSON
1205 TERRACE MILL DRIVE
MURPHY, TX 75094

EXAMINER

ART UNIT	PAPER NUMBER
2835	

MAIL DATE	DELIVERY MODE
10/15/2008	PAPER

Please find below and/or attached an Office communication concerning this application or proceeding.

The time period for reply, if any, is set in the attached communication.

UNITED STATES PATENT AND TRADEMARK OFFICE

Commissioner for Patents
United States Patent and Trademark Office
P.O. Box 1450
Alexandria, VA 22313-1450
www.uspto.gov

KELCE WILSON
1205 TERRACE MILL DRIVE
MURPHY TX 75094

In re Application of:	:	
WILSON et al	:	DECISION ON PETITION TO
Serial No.: 12/114,808	:	MAKE SPECIAL FOR NEW
Filed: May 4, 2008	:	APPLICATION UNDER 37
Title: NOTEBOOK COMPUTER WITH TILTING	:	C.F.R. § 1.102 & M.P.E.P. § 708.2
KEYBOARD VENT	:	

This is a decision on the petition filed on May 4, 2008 to make the above-identified application special for accelerated examination procedure under 37 C.F.R. § 1.102(d).

The petition to make the application special is **DISMISSED**.

REGULATION AND PRACTICE

A grantable petition to make special under 37 C.F.R. § 1.102(d) and pursuant to the "Change to Practice for Petitions in Patent Applications to Make Special and for Accelerated Examination" published in the Federal Register on June 26, 2006 (71 Fed. Reg. 36323), must satisfy the following conditions:

I. Conditions Regarding the Application:

1. the application must be a non-reissue utility or design application filed under 37 CFR 1.111(a);
2. the application, the petition and the required fees must be filed electronically using the USPTO's electronic filing system (EFS), or EFS-web; if not filed electronically, a statement asserting that EFS and EFS-web were not available during the normal business hours.
3. at the time of filing, the application must be complete under 37 CFR 1.51 and in condition for examination;
4. the application must contain three or fewer independent claims and twenty or fewer total claims and the claims must be directed to a single invention.

II. Conditions Regarding the Petition:

The petition must:
1. be filed with the application;

2. include a statement that applicant agrees not to separately argue the patentability of any independent claim during any appeal in the application;

3. include a statement that applicant agrees to make an election without traverse in a telephone interview;

4. include a statement that applicant agrees to conduct such an interview when requested by the examiner; and

5. include a statement, made based on a good faith belief, that a preexamination search in compliance with the following requirements, was conducted, including an identification of the field of search by United States class and subclass, where applicable, and for database searches, the search logic or chemical structure or sequence used as a query, the name of the file(s) searched and the database service, and the date of the search.

The preexamination search must:

5.1 involve U.S. patents and patent application publications, foreign patent documents, and non-patent literature, unless the applicant can justify with reasonable certainty that no references more pertinent than those already identified are likely to be found in the eliminated sources and includes such a justification with this statement;

5.2. be directed to the claimed invention and encompass all of the features of the claims, giving the claims the broadest reasonable expectation; and

5.3. encompass the disclosed features that may be claimed.

6. must provide in support of the petition an accelerated examination support document. An accelerated examination support document must include:

6.1. an information disclosure statement (IDS) in compliance with 37 CFR 1.98 citing each reference deemed most closely related to the subject matter of each of the claims;

6.2. an identification of all the limitations in the claims that are disclosed by the reference specifying where the limitation is disclosed in the cited reference;

6.3. a detailed explanation of how each of the claims are patentable over the references cited with particularity required by 37 CFR 1.111(b) and (c);

6.4. a concise statement of the utility of the invention as defined in each of the independent claims (unless the application is a design application);

6.5. a showing of where each limitation of the claims finds support under 35 USC 112, first paragraph, in the written description of the specification. If applicable, the showing must also identify: (1) each means- (or step) plus-function claim element that invokes consideration under 35 USC 112, sixth paragraph; and (2) the structure, material, or acts in the specification that corresponds to each means- (or step) plus-function claim element that invokes consideration under 35 USC 112, sixth paragraph; if the application claims the benefit of one or more applications under title 35, United States Code, the showing must also include where each limitation of the claims finds support under 35 USC 112, first paragraph, in each such application in which such supports exists; and

6.6. an identification of any cited references that may be disqualified under 35 USC 103(c).

REVIEW OF FACTS

The conditions regarding the application (section I, subsections 1-4) discussed above are considered to have been met. Additionally, the conditions regarding the petition (section II, subsection 1) is considered to have been met. However, the petition fails to comply with the all the conditions set forth in section II, subsections 2 - 6. Therefore, the petition fails to meet the required conditions to be accorded special status under the accelerated examination procedure.

The petition appears on its face to be filed without recognition of the August 25, 2006 policy change to the petition to make special program. Note that a statement that the application is directed to countering terrorism, under the new policy, is only sufficient for waiver of the required $130 petition fee. Petitioner's provided statement is sufficient for waiver of said fee. A copy of Federal Register on June 26, 2006 (71 Fed. Reg. 36323) is being attached to the mailed decision for petitioner's review. Further guidance may be found at www.USPTO.gov under the accelerated examination link.

DECISION

For the above-stated reasons, the petition is **dismissed**. The application will therefore be taken up by the examiner for action in its regular turn.

Petitioner is given a single opportunity to perfect the petition. Any request for reconsideration of this decision must be submitted within 1 (one) month or 30 (thirty) days, whichever is longer, from the date of this decision in order to be considered timely. Any request for reconsideration must address the deficiencies indicated above.

Petition is reminded that, upon granting of the special status of the application on request for reconsideration, the application will be processed expeditiously. However, due to the dismissal of the instant petition, examination may not be completed within twelve months of the filing date of the application.

Any inquiries regarding this decision should be directed to Quality Assurance Specialist Jose' G. Dees at (571) 272-1569.

Jose' G. Dees, Quality Assurance Specialist
Technology Center 2800
Semiconductors, Electrical and Optical
Systems and Components

(2) Activities will be initiated before dusk;

(3) Construction noises must be kept constant (i.e., not interrupted by periods of quiet in excess of 30 minutes) while pinnipeds are present;

(4) If activities cease for longer than 30 minutes and pinnipeds are in the area, start-up of activities will include a gradual increase in noise levels;

(5) A NMFS-approved marine mammal observer will visually monitor the pinnipeds on the beach adjacent to the harbor and on rocks for any flushing or other behaviors as a result of Boeing's activities (see Monitoring); and

(6) To the extent possible, the *Delta Mariner* and accompanying vessels will enter the harbor only when the tide is too high for harbor seals to haul-out on the rocks. The vessel will reduce speed 1.5 to 2 knots (2.8–3.7 km/hr) once the vessel is within 3 mi (4.83 km) of the harbor. The vessel will enter the harbor stern first, approaching the wharf and mooring dolphins at less than 0.75 knot (1.4 km/hr).

Monitoring

As part of its 2002 application, Boeing provided a proposed monitoring plan for assessing impacts to harbor seals from the activities at south VAFB harbor and for determining when mitigation measures should be employed. NMFS proposes the same plan for this IHA.

A NMFS-approved and VAFB-designated biologically trained observer will monitor the area for pinnipeds during all harbor activities. During nighttime activities, the harbor area will be illuminated, and the monitor will use a night vision scope. Monitoring activities will consist of:

(1) Conducting baseline observation of pinnipeds in the project area prior to initiating project activities;

(2) Conducting and recording observations on pinnipeds in the vicinity of the harbor for the duration of the activity occurring when tides are low enough for pinnipeds to haul out (2 ft, 0.61 m, or less); and

(3) Conducting post-construction observations of pinniped haul-outs in the project area to determine whether animals disturbed by the project activities return to the haul-out.

Monitoring results from previous years of these activities have been reviewed and incorporated into the analysis of potential effects in this document, as well as the take estimates.

Reporting

Boeing will notify NMFS 2 weeks prior to initiation of each activity. After each activity is completed, Boeing will provide a report to NMFS within 90 days. This report will provide dates and locations of specific activities, details of seal behavioral observations, and estimates of the amount and nature of all takes of seals by harassment or in other ways. In addition, the report will include information on the weather, the tidal state, the horizontal visibility, and the composition (species, gender, and age class) and locations of haul-out group(s). In the unanticipated event that any marine mammal is injured or killed as a result of these activities, Boeing or its designee shall report the incident to NMFS immediately.

Endangered Species Act

This action will not affect species listed under the Endangered Species Act (ESA) that are under the jurisdiction of NMFS. VAFB formally consulted with U.S. Fish and Wildlife Service (FWS) in 1998 on the possible take of southern sea otters during Boeing's harbor activities at south VAFB. A Biological Opinion was issued in August 2001, which concluded that the proposed activities were not likely to jeopardize the continued existence of the southern sea otter. The activities covered by this IHA are analyzed in that Biological Opinion, and this IHA does not modify the action in a manner that was not previously analyzed.

National Environmental Policy Act

In 2001, the USAF prepared an Environmental Assessment (EA) for Harbor Activities Associated with the Delta IV Program at Vandenberg Air Force Base. In 2005, NMFS prepared an EA supplementing the information contained in the USAF EA and issued a Finding of No Significant Impact (FONSI) on the issuance of an IHA for Boeing's harbor activities in accordance with section 6.01 of the National Oceanic and Atmospheric Administration Administrative Order (NAO) 216–6 (Environmental Review Procedures for Implementing the National Environmental Policy Act, May 20, 1999). The proposed activity is within the scope of NMFS'2005 EA and FONSI.

Conclusions

NMFS has issued an IHA to Boeing for harbor activities related to the Delta IV/EELV to take place at south VAFB over a 1-year period, contingent upon adherence to the previously mentioned mitigation, monitoring, and reporting requirements. NMFS has determined that the impact of harbor activities related to the Delta IV/EELV at VAFB (transport vessel operations, cargo movement activities, harbor maintenance dredging, and kelp habitat mitigation) will result in the Level B Harassment of small numbers of Pacific harbor seals, California sea lions, and northern elephant seals. The effects of Boeing's harbor activities are expected to be in the form of short-term and localized behavioral changes and no take by injury or death is anticipated or authorized. NMFS has further determined that these takes will have a negligible impact on the affected marine mammal species and stocks and will not have an unmitigable adverse impact on the availability of such marine mammal species and stocks for subsistence uses.

Authorization

NMFS has issued an IHA to take marine mammals, by Level B harassment, incidental to conducting harbor activities at VAFB to Boeing for a 1-year period, provided the mitigation, monitoring, and reporting requirements are undertaken.

Dated: June 19, 2006.

James H. Lecky,

Director, Office of Protected Resources, National Marine Fisheries Service.

[FR Doc. E6–10044 Filed 6–23–06; 8:45 am]

BILLING CODE 3510–22–S

DEPARTMENT OF COMMERCE

Patent and Trademark Office

[Docket No.: PTO–P–2006–0014]

Changes to Practice for Petitions in Patent Applications To Make Special and for Accelerated Examination

AGENCY: United States Patent and Trademark Office, Commerce.

ACTION: Notice.

SUMMARY: The United States Patent and Trademark Office (USPTO) has established procedures under which the examination of a patent application may be accelerated. Under one of these procedures, the USPTO will advance an application out of turn for examination if the applicant files a grantable petition to make special under the accelerated examination program. The USPTO is revising its procedures for applications made special under the accelerated examination program with the goal of completing examination within twelve months of the filing date of the application. The USPTO is similarly revising the procedures for other petitions to make special, except those based on applicant's health or age or the recently announced Patent Prosecution Highway (PPH) pilot program between the USPTO and the Japan Patent Office.

DATES: *Effective Date:* The change in practice in this notice applies to

petitions to make special filed on or after August 25, 2006.

FOR FURTHER INFORMATION CONTACT: Pinchus Laufer, Detailee, Office of Patent Legal Administration, Office of the Deputy Commissioner for Patent Examination Policy, by telephone at (571) 272–7726, or by facsimile at (571) 273–7726. Comments concerning petition to make special practice may be sent by electronic mail message over the Internet addressed to *MPEPFeedback@uspto.gov*, or submitted by mail addressed to: Mail Stop Comments—Patents, Commissioner for Patents, P.O. Box 1450, Alexandria, VA, 22313–1450.

Any inquiries concerning electronic filing of the application should be directed to the Electronic Business Center (EBC) at (866) 217–9197. Any inquiries concerning a specific petition to make special should be directed to the appropriate Technology Center Special Program Examiner.

SUPPLEMENTARY INFORMATION: New patent applications are normally taken up for examination in the order of their United States filing date. The USPTO has a procedure for requesting accelerated examination under which an application will be advanced out of turn for examination if the applicant files a petition to make special with the appropriate showing. *See* 37 CFR 1.102 and *Manual of Patent Examining Procedure* § 708.02 (VIII) (8th ed. 2001) (Rev. 3, August 2005) (MPEP). The USPTO is revising its procedures for applications made special under the accelerated examination program with the goal of completing examination within twelve months of the filing date of the application. *See* Part VIII (subsection The Twelve-Month Goal) for more information.

The USPTO is similarly revising the procedures for other petitions to make special, except those based on applicant's health or age or the PPH pilot program. Specifically, other petitions to make special (*i.e.*, petitions based on: manufacture, infringement, environmental quality, energy, recombinant DNA, superconductivity materials, HIV/AIDS and cancer, countering terrorism, and biotechnology applications filed by small entities (*see* MPEP § 708.02)) will be processed and examined using the revised procedure for accelerated examination. Thus, all petitions to make special, except those based on applicant's health or age or the PPH pilot program, will be required to comply with the requirements of petitions to make special under the accelerated examination program that are set forth in this notice.

Any petition to make special, other than those based on applicant's health or age or the PPH pilot program, filed on or after the effective date must meet the requirements set forth in this notice. Applications filed before the effective date will not be eligible for the revised accelerated examination program. Until the effective date, applicant may file a petition to make special in an application filed before the effective date by complying with the previous guidelines and requirements in MPEP § 708.02 (I–II, and V–XII). A petition to make special filed after the effective date will only be granted if it is based upon applicant's health or age or is under the PPH pilot program, or if it complies with the requirements set forth in this notice. See Part VIII, for more information on eligibility.

Part I. Requirements for Petitions to Make Special under Accelerated Examination: A new application may be granted accelerated examination status under the following conditions:

(1) The application must be filed with a petition to make special under the accelerated examination program accompanied by either the fee set forth in 37 CFR 1.17(h) or a statement that the claimed subject matter is directed to environmental quality, energy, or countering terrorism. *See* 37 CFR 1.102(c)(2). Applicant should use form PTO/SB/28 for filing the petition.

(2) The application must be a non-reissue utility or design application filed under 35 U.S.C. 111(a).

(3) The application, petition, and required fees must be filed electronically using the USPTO's electronic filing system (EFS), or EFS-Web. If the USPTO's EFS and EFS-Web are not available to the public during the normal business hours for these systems at the time of filing the application, applicant may file the application, other papers and fees by mail accompanied by a statement that EFS and EFS-Web were not available during the normal business hours, but the final disposition of the application may occur later than twelve months from the filing of the application. *See* Part VIII (subsection The Twelve-Month Goal) for more information.

(4) At the time of filing, the application must be complete under 37 CFR 1.51 and in condition for examination. For example, the application must be filed together with the basic filing fee, search fee, examination fee, and application size fee (if applicable), and an executed oath or declaration under 37 CFR 1.63. *See* Part VIII (subsection Conditions for Examination) for more information.

(5) The application must contain three or fewer independent claims and twenty or fewer total claims. The application must also not contain any multiple dependent claims. By filing a petition to make special under the accelerated examination program the applicant is agreeing not to separately argue the patentability of any dependent claim during any appeal in the application. Specifically, the applicant is agreeing that the dependent claims will be grouped together with and not argued separately from the independent claim from which they depend in any appeal brief filed in the application (37 CFR 41.37(c)(1)(vii)). The petition must include a statement that applicant will agree not to separately argue the patentability of any dependent claim during any appeal in the application. See form PTO/SB/28.

(6) The claims must be directed to a single invention. If the USPTO determines that all the claims presented are not directed to a single invention, applicant must make an election without traverse in a telephonic interview. The petition must include a statement that applicant will agree to make an election without traverse in a telephonic interview. See form PTO/SB/28.

(7) The applicant must be willing to have an interview (including an interview before a first Office action) to discuss the prior art and any potential rejections or objections with the intention of clarifying and possibly resolving all issues with respect to patentability at that time. The petition must include a statement that applicant will agree to have such an interview when requested by the examiner. See form PTO/SB/28.

(8) At the time of filing, applicant must provide a statement that a preexamination search was conducted, including an identification of the field of search by United States class and subclass and the date of the search, where applicable, and for database searches, the search logic or chemical structure or sequence used as a query, the name of the file or files searched and the database service, and the date of the search.

(A) This preexamination search must involve U.S. patents and patent application publications, foreign patent documents, and non-patent literature, unless the applicant can justify with reasonable certainty that no references more pertinent than those already identified are likely to be found in the eliminated source and includes such a justification with this statement.

(B) This preexamination search must be directed to the claimed invention and

encompass all of the features of the claims, giving the claims the broadest reasonable interpretation.

(C) The preexamination search must also encompass the disclosed features that may be claimed. An amendment to the claims (including any new claim) that is not encompassed by the preexamination search or an updated accelerated examination support document (*see* item 9) will be treated as not fully responsive and will not be entered. *See* Part IV (Reply by Applicant) for more information.

(D) A search report from a foreign patent office will not satisfy this preexamination search requirement unless the search report satisfies the requirements set forth in this notice for a preexamination search.

(E) Any statement in support of a petition to make special must be based on a good faith belief that the preexamination search was conducted in compliance with these requirements. *See* 37 CFR 1.56 and 10.18.

(9) At the time of filing, applicant must provide in support of the petition an accelerated examination support document.

(A) An accelerated examination support document must include an information disclosure statement (IDS) in compliance with 37 CFR 1.98 citing each reference deemed most closely related to the subject matter of each of the claims.

(B) For each reference cited, the accelerated examination support document must include an identification of all the limitations in the claims that are disclosed by the reference specifying where the limitation is disclosed in the cited reference.

(C) The accelerated examination support document must include a detailed explanation of how each of the claims are patentable over the references cited with the particularity required by 37 CFR 1.111(b) and (c).

(D) The accelerated examination support document must include a concise statement of the utility of the invention as defined in each of the independent claims (unless the application is a design application).

(E) The accelerated examination support document must include a showing of where each limitation of the claims finds support under the first paragraph of 35 U.S.C. 112 in the written description of the specification. If applicable, the showing must also identify: (1) Each means- (or step-) plus-function claim element that invokes consideration under 35 U.S.C. 112, ¶ 6; and (2) the structure, material, or acts in the specification that correspond to each means- (or step-) plus-function claim element that invokes consideration under 35 U.S.C. 112, ¶ 6. If the application claims the benefit of one or more applications under title 35, United States Code, the showing must also include where each limitation of the claims finds support under the first paragraph of 35 U.S.C. 112 in each such application in which such support exists.

(F) The accelerated examination support document must identify any cited references that may be disqualified as prior art under 35 U.S.C. 103(c) as amended by the Cooperative Research and Technology Enhancement (CREATE) Act (Pub. L. 108–453, 118 Stat. 3596 (2004)).

Part II. Decision on Petition To Make Special: Applicant will be notified of the decision by the deciding official. If the application and/or petition does not meet all the prerequisites set forth in this notice for the application to be granted special status (including a determination that the search is deemed to be insufficient), the applicant will be notified of the defects and the application will remain in the status of a new application awaiting action in its regular turn. In those instances in which the petition or accelerated examination support document is defective in one or more requirements, applicant will be given a single opportunity to perfect the petition or accelerated examination support document within a time period of one month (no extensions under 37 CFR 1.136(a)). This opportunity to perfect a petition does not apply to applications that are not in condition for examination on filing. *See* Part VIII (subsection Condition for Examination). If the document is satisfactorily corrected in a timely manner, the petition will then be granted, but the final disposition of the application may occur later than twelve months from the filing date of the application. Once a petition has been granted, prosecution will proceed according to the procedure set forth below.

Part III. The Initial Action on the Application by the Examiner: Once the application is granted special status, the application will be docketed and taken up for action expeditiously (*e.g.*, within two weeks of the granting of special status). If it is determined that all the claims presented are not directed to a single invention, the telephone restriction practice set forth in MPEP § 812.01 will be followed. Applicant must make an election without traverse during the telephonic interview. If applicant refuses to make an election without traverse, or the examiner cannot reach the applicant after a reasonable effort, the examiner will treat the first claimed invention (the invention of claim 1) as constructively elected without traverse for examination. Continuing applications (*e.g.*, a divisional application directed to the non-elected inventions) will not automatically be given special status based on papers filed with the petition in the parent application. Each continuing application must on its own meet all requirements for special status.

If the USPTO determines that a possible rejection or other issue must be addressed, the examiner will telephone the applicant to discuss the issue and any possible amendment or submission to resolve such issue. The USPTO will not issue an Office action (other than a notice of allowance) unless either: (1) An interview was conducted but did not result in the application being placed in condition for allowance; or (2) there is a determination that an interview is unlikely to result in the application being placed in condition for allowance. Furthermore, prior to the mailing of any Office action rejecting the claims, the USPTO will conduct a conference to review the rejections set forth in the Office action.

If an Office action other than a notice of allowance or a final Office action is mailed, the Office action will set a shortened statutory period of one-month or thirty-days, whichever is longer. No extensions of this shortened statutory period under 37 CFR 1.136(a) will be permitted. Failure to timely file a reply will result in abandonment of the application. *See* Parts V and VI for more information on post-allowance and after-final procedures.

Part IV. Reply by Applicant: A reply to an Office action must be limited to the rejections, objections, and requirements made. Any amendment that attempts to: (1) Add claims which would result in more than three independent claims, or more than twenty total claims, pending in the application; (2) present claims not encompassed by the preexamination search (*see* item 8 of Part I) or an updated accelerated examination support document (*see* next paragraph); or (3) present claims that are directed to a nonelected invention or an invention other than previously claimed in the application, will be treated as not fully responsive and will not be entered. *See* Part VIII (subsection Reply Not Fully responsive) for more information.

For any amendment to the claims (including any new claim) that is not encompassed by the accelerated examination support document in Part I, item 9, applicant is required to provide an updated accelerated examination

support document that encompasses the amended or new claims at the time of filing the amendment. Failure to provide such updated accelerated examination support document at the time of filing the amendment will cause the amendment to be treated as not fully responsive and not to be entered. *See* Part VIII (subsection Reply Not Fully Responsive) for more information. Any IDS filed with an updated accelerated examination support document must also comply with the requirements of 37 CFR 1.97 and 1.98.

Any reply or other papers must be filed electronically via EFS-Web so that the papers will be expeditiously processed and considered. If the papers are not filed electronically via EFS-Web, or the reply is not fully responsive, the final disposition of the application may occur later than twelve months from the filing of the application.

Part V. Post-Allowance Processing: The mailing of a notice of allowance is the final disposition for purposes of the twelve-month goal for the program. In response to a notice of allowance, applicant must pay the issue fee within three months from the date of mailing of the Notice of Allowance and Fee(s) Due (form PTOL–85) to avoid abandonment of the application. In order for the application to be expeditiously issued as a patent, the applicant must also: (1) Pay the issue fee (and any outstanding fees due) within one month from the mailing date of the form PTOL–85; and (2) not file any post-allowance papers that are not required by the USPTO (*e.g.*, an amendment under 37 CFR 1.312 that was not requested by the USPTO).

Part VI. After-Final and Appeal Procedures: The mailing of a final Office action or the filing of a notice of appeal, whichever is earlier, is the final disposition for purposes of the twelve-month goal for the program. Prior to the mailing of a final Office action, the USPTO will conduct a conference to review the rejections set forth in the final Office action (*i.e.*, the type of conference conducted in an application on appeal when the applicant requests a pre-appeal brief conference). In order for the application to be expeditiously forwarded to the Board of Patent Appeals and Interferences (BPAI) for a decision, applicant must: (1) Promptly file the notice of appeal, appeal brief, and appeal fees; and (2) not request a pre-appeal brief conference. A pre-appeal brief conference would not be of value in an application under a final Office action because the examiner will have already conducted such a conference prior to mailing the final Office action. During the appeal process, the application will be treated in accordance with the normal appeal procedures. The USPTO will continue to treat the application special under the accelerated examination program after the decision by the BPAI.

Any after-final amendment, affidavit, or other evidence filed under 37 CFR 1.116 or 41.33 must also meet the requirements set forth in Part IV (Reply by Applicant). If applicant files a request for continued examination (RCE) under 37 CFR 1.114 with a submission and fee, the submission must meet the reply requirements under 37 CFR 1.111 (*see* 37 CFR 1.114(c)) and the requirements set forth in Part IV (Reply by Applicant). The filing of the RCE is a final disposition for purposes of the twelve-month goal for the program. The application will retain its special status and remain in the accelerated examination program. Thus, the examiner will continue to examine the application in accordance with the procedures set forth in Part III and any subsequent replies filed by applicant must meet the requirements of Part IV. The goal of the program will then be to reach a final disposition of the application within twelve months from the filing of the RCE.

Part VII. Proceedings Outside the Normal Examination Process: If an application becomes involved in proceedings outside the normal examination process (*e.g.*, a secrecy order, national security review, interference, or petitions under 37 CFR 1.181–1.183), the USPTO will treat the application special under the accelerated examination program before and after such proceedings. During those proceedings, however, the application will not be accelerated. For example, during an interference proceeding, the application will be treated in accordance with the normal interference procedures and will not be treated under the accelerated examination program. Once any one of these proceedings is completed, the USPTO will process the application expeditiously under the accelerated examination program until it reaches final disposition, but that may occur later than twelve months from the filing of the application.

Part VIII. More Information:

Eligibility: Any non-reissue utility or design application filed under 35 U.S.C. 111(a) on or after the effective date of this program is eligible for the revised accelerated examination program. The following types of filings are not eligible for this revised accelerated examination program: Plant applications, reissue applications, applications entering the national stage from an international application after compliance with 35 U.S.C. 371, reexamination proceedings, RCEs under 37 CFR 1.114 (unless the application was previously granted special status under the program), and petitions to make special based on applicant's health or age or under the PPH pilot program. Rather than participating in this revised accelerated examination program, applicants for a design patent may participate in the expedited examination program by filing a request in compliance with the guidelines set forth in MPEP § 1504.30. *See* 37 CFR 1.155.

Form: Applicant should use form PTO/SB/28 for filing a petition to make special, other than those based on applicant's health or age or the PPH pilot program. The form is available on EFS-Web and on the USPTO's Internet Web site at *http://www.uspto.gov/web/forms/index.html.*

Conditions for Examination: The application must be in condition for examination at the time of filing. This means the application must include the following:

(A) Basic filing fee, search fee, and examination fee, under 37 CFR 1.16 (*see* MPEP section 607(I)),

(B) Application size fee under 37 CFR 1.16(s) (if the specification and drawings exceed 100 sheets of paper) (*see* MPEP section 607(II));

(C) An executed oath or declaration in compliance with 37 CFR 1.63;

(D) A specification (in compliance with 37 CFR 1.52) containing a description (37 CFR 1.71) and claims in compliance with 37 CFR 1.75;

(E) A title and an abstract in compliance with 37 CFR 1.72;

(F) Drawings in compliance with 37 CFR 1.84;

(G) Electronic submissions of sequence listings in compliance with 37 CFR 1.821(c) or (e), large tables, or computer listings in compliance with 37 CFR 1.96, submitted via the USPTO's electronic filing system (EFS) in ASCII text as part of an associated file (if applicable);

(H) Foreign priority claim under 35 U.S.C. 119(a)–(d) identified in the executed oath or declaration or an application data sheet (if applicable);

(I) Domestic benefit claims under 35 U.S.C. 119(e), 120, 121, or 365(c) in compliance with 37 CFR 1.78 (*e.g.*, the specific reference to the prior application must be submitted in the first sentence(s) of the specification or in an application data sheet, and for any benefit claim to a non-English language provisional application, the application must include a statement that: (a) An English language translation, and (b) a statement that the translation is

accurate, have been filed in the provisional application) (if applicable);

(J) English language translation under 37 CFR 1.52(d), a statement that the translation is accurate, and the processing fee under 37 CFR 1.17(i) (if the specification is in a non-English language);

(K) No preliminary amendments present on the filing date of the application; and

(L) No petition under 37 CFR 1.47 for a non-signing inventor.

Furthermore, if the application is a design application, the application must also comply with the requirements set forth in 37 CFR 1.151–1.154.

Applicant should also provide a suggested classification, by class and subclass, for the application on the transmittal letter, petition, or an application data sheet as set forth in 37 CFR 1.76(b)(3) so that the application can be expeditiously processed.

The petition to make special will be dismissed if the application omits an item or includes a paper that causes the Office of Initial Patent Examination (OIPE) to mail a notice during the formality review (*e.g.*, a notice of incomplete application, notice to file missing parts, notice to file corrected application papers, notice of omitted items, or notice of informal application). The opportunity to perfect a petition (Part II) does not apply to applications that are not in condition for examination on filing.

Reply Not Fully Responsive: If a reply to a non-final Office action is not fully responsive, but a *bona fide* attempt to advance the application to final action, the examiner may provide one month or thirty-days, whichever is longer, for applicant to supply the omission or a fully responsive reply. No extensions of this time period under 37 CFR 1.136(a) will be permitted. Failure to timely file the omission or a fully responsive reply will result in abandonment of the application. If the reply is not a *bona fide* attempt or it is a reply to a final Office action, no additional time period will be given. The time period set forth in the previous Office action will continue to run.

Withdrawal From Accelerated Examination: There is no provision for "withdrawal" from special status under the accelerated examination program. An applicant may abandon the application that has been granted special status under the accelerated examination program in favor of a continuing application, and the continuing application will not be given special status under the accelerated examination program unless the continuing application is filed with a petition to make special under the accelerated examination program. The filing of an RCE under 37 CFR 1.114, however, will not result in an application being withdrawn from special status under the accelerated examination program.

The Twelve-Month Goal: The objective of the accelerated examination program is to complete the examination of an application within twelve months from the filing date of the application. The twelve-month goal is successfully achieved when one of the following final dispositions occurs: (1) The mailing of a notice of allowance; (2) the mailing of a final Office action; (3) the filing of an RCE; or (4) the abandonment of the application. The final disposition of an application, however, may occur later than the twelve-month timeframe in certain situations (*e.g.*, an IDS citing new prior art after the mailing of a first Office action). *See* Part VII for more information on other events that may cause examination to extend beyond this twelve-month time frame. In any event, however, this twelve-month timeframe is simply a goal. Any failure to meet the twelve-month goal or other issues relating to this twelve-month goal are neither petitionable nor appealable matters.

Paperwork Reduction Act: This notice involves information collection requirements which are subject to review by the Office of Management and Budget (OMB) under the Paperwork Reduction Act of 1995 (44 U.S.C. 3501 *et seq.*). The collection of information involved in this notice has been reviewed and previously approved by OMB under OMB control number 0651–0031. The Office has submitted a Change Worksheet to OMB for review of form PTO/SB/28 Petition to Make Special Under the Accelerated Examination.

Notwithstanding any other provision of law, no person is required to respond to nor shall a person be subject to a penalty for failure to comply with a collection of information subject to the requirements of the Paperwork Reduction Act unless that collection of information displays a currently valid OMB control number.

Section 708.02 of the *Manual of Patent Examining Procedure* will be revised in due course to reflect this change in practice.

Dated: June 20, 2006.

Jon W. Dudas,

Under Secretary of Commerce for Intellectual Property and Director of the United States Patent and Trademark Office.

[FR Doc. E6–10022 Filed 6–23–06; 8:45 am]

BILLING CODE 3510–16–P

COMMITTEE FOR THE IMPLEMENTATION OF TEXTILE AGREEMENTS

Designation under the Textile and Apparel Commercial Availability Provisions of the United States Caribbean Basin Trade Partnership Act (CBTPA)

June 21, 2006.

AGENCY: The Committee for the Implementation of Textile Agreements (CITA)

ACTION: Designation.

EFFECTIVE DATE: June 26, 2006.

SUMMARY: The Committee for the Implementation of Textile Agreements (CITA) has determined that certain 100 percent cotton, yarn-dyed, 3- or 4-thread twill weave, flannel fabrics, of combed, ring spun single yarns, of the specifications detailed below, classified in subheading 5208.43.0000 of the Harmonized Tariff Schedule of the United States (HTSUS), for use in products in Categories 340, 341, and 350, cannot be supplied by the domestic industry in commercial quantities in a timely manner. The CITA hereby designates products in Categories 340, 341, and 350 that are both cut and sewn or otherwise assembled in one or more eligible CBTPA beneficiary countries from such fabrics, as eligible for quota free and duty free treatment under the textile and apparel commercial availability provisions of the CBTPA and eligible under HTSUS subheading 9820.11.27 to enter free of quota and duties, provided that all other fabrics in the referenced apparel articles are wholly formed in the United States from yarns wholly formed in the United States.

FOR FURTHER INFORMATION CONTACT: Maria K. Dybczak, Office of Textiles and Apparel, U.S. Department of Commerce, (202) 482 3400.

SUPPLEMENTARY INFORMATION:

Authority: Section 213(b)(2)(A)(v)(II) of CBERA, as added by Section 211(a) of the CBTPA; Presidential Proclamation 7351 of October 2, 2000; Section 6 of Executive Order No. 13191 of January 17, 2001.

BACKGROUND:

The commercial availability provision of the CBTPA provides for duty free and quota free treatment for apparel articles that are both cut (or knit to shape) and sewn or otherwise assembled in one or more beneficiary CBTPA country from fabric or yarn that is not formed in the United States if it has been determined that such yarns or fabrics cannot be supplied by the domestic industry in commercial quantities in a timely

UNITED STATES PATENT AND TRADEMARK OFFICE

UNITED STATES DEPARTMENT OF COMMERCE
United States Patent and Trademark Office
Address: COMMISSIONER FOR PATENTS
P.O. Box 1450
Alexandria, Virginia 22313-1450
www.uspto.gov

APPLICATION NO.	FILING DATE	FIRST NAMED INVENTOR	ATTORNEY DOCKET NO.	CONFIRMATION NO.
12/114,808	05/04/2008	Robyn L. Wilson	KW007US	3897

70339 7590 01/23/2009
KELCE WILSON
1205 TERRACE MILL DRIVE
MURPHY, TX 75094

EXAMINER

ART UNIT	PAPER NUMBER
2835	

MAIL DATE	DELIVERY MODE
01/23/2009	PAPER

Please find below and/or attached an Office communication concerning this application or proceeding.

The time period for reply, if any, is set in the attached communication.

UNITED STATES PATENT AND TRADEMARK OFFICE

Commissioner for Patents
United States Patent and Trademark Office
P.O. Box 1450
Alexandria, VA 22313-1450
www.uspto.gov

KELCE WILSON
1205 TERRACE MILL DRIVE
MURPHY TX 75094

In re Application of: WILSON et al. Serial No.: 12/114,808 Filed: May 4, 2008 Title: NOTEBOOK COMPUTER WITH TILTING KEYBOARD VENT	DECISION ON PETITION TO MAKE SPECIAL FOR NEW APPLICATION UNDER 37 C.F.R. § 1.102 & M.P.E.P. § 708.2

A decision dismissing the petition to make the above-identified application special for accelerated examination was mailed on October 15, 2008. The decision set a non-extendable time period of one month or 30 (thirty) days, whichever is longer, from its mailing date to correct the deficiency/deficiencies in the petition.

As of November 17, 2008, the expiry of the period set, neither a reply nor a renewed petition was received. Accordingly, the application is no longer eligible for the accelerated examination program.

The application will remain in its regular status and will be taken up by the examiner for action in its regular turn.

Any inquiries regarding this decision should be directed to Quality Assurance Specialist Jose' G. Dees at (571) 272-1569.

Jose' G. Dees, Quality Assurance Specialist
Technology Center 2800
Semiconductors, Electrical and Optical
Systems and Components

UNITED STATES PATENT AND TRADEMARK OFFICE

UNITED STATES DEPARTMENT OF COMMERCE
United States Patent and Trademark Office
Address: COMMISSIONER FOR PATENTS
P.O. Box 1450
Alexandria, Virginia 22313-1450
www.uspto.gov

APPLICATION NO.	FILING DATE	FIRST NAMED INVENTOR	ATTORNEY DOCKET NO.	CONFIRMATION NO.
12/114,809	05/04/2008	Rachel Tzoref	IL920070136US1	3901

75749 7590 12/22/2008
MAXVALUEIP CONSULTING LLC
11204 ALBERMYRTLE ROAD
POTOMAC, MD 20854

EXAMINER
VINCENT, DAVID ROBERT

ART UNIT	PAPER NUMBER
2129	

MAIL DATE	DELIVERY MODE
12/22/2008	PAPER

Please find below and/or attached an Office communication concerning this application or proceeding.

The time period for reply, if any, is set in the attached communication.

UNITED STATES PATENT AND TRADEMARK OFFICE

Commissioner for Patents
United States Patent and Trademark Office
P.O. Box 1450
Alexandria, VA 22313-1450
www.uspto.gov

MAXVALUEIP CONSULTING LLC
11204 ALBERMYRTLE ROAD
POTOMAC MD 20854

In re Application of: Rachel Tzoref et al. Serial No.: 12/114,809 Filed: May 4, 2008 Docket: IL920070136US1 Title: USING AUTOMATICALLY GENERATED DECISION TREES TO ASSIST IN THE PROCESS OF DESIGN AND REVIEW DOCUMENTATION	DECISION ON PETITION TO MAKE SPECIAL FOR NEW APPLICATION UNDER 37 C.F.R. § 1.102 & M.P.E.P. § 708.02

This is a decision on the petition filed on May 4, 2008 to make the above- identified application special for accelerated examination procedure under 37 C.F.R. § 1.102(d).

The petition to make the application special is GRANTED.

The application is eligible for accelerated examination and the petition complies with the conditions for granting the application special status pursuant to the "Change to Practice for Petitions in Patent Applications to Make Special and for Accelerated Examination" published June 26, 2006, in the Federal Register. (71 Fed. Reg. 36323).

The prosecution of the instant application will be conducted expeditiously according to the following guidelines.

1. The application will be docketed to an examiner and taken up for action within two weeks of the date of this decision.

2. Restriction Practice:
   If the examiner determines that the claims are not directed to a single invention, a telephone request to elect one single invention will be made pursuant to MPEP 812.01. As a prerequisite to the grant of this petition, the applicant has agreed to make an oral election, by telephone, without traverse. If the applicant refuses to make an election without traverse, or the examiner cannot reach the applicant after a reasonable effort, the examiner will treat the first claimed invention (invention defined by claim 1) as having being constructively elected without traverse for examination.

3. Office action:
   If it is determined that, after appropriate consultation, there is a potential rejection or any other issue to be addressed, the examiner will telephone the applicant and arrange an interview to discuss and resolve the issue. An Office action, other than a Notice of Allowance and Fee(s) Due (Notice of Allowance), will not be issued unless either: 1) an interview was conducted but did not result in agreed to action that places the application in condition for allowance, or, 2) a determination is made that an interview would be unlikely to result in the application being placed in condition for allowance, and 3) an internal conference has been held to review any rejection of any claim.

4. Time for Reply:
   An Office action other than a Notice of Allowance or a final Office action will set a shortened statutory period of one month or thirty days, whichever is longer, for reply with no extension of time available under 37 CFR 1.136(a). Failure to timely file a reply within this non-extendible period for reply will result in the abandonment of the application.

5. Reply by Applicant:
   A timely reply to an Office action other than the Notice of Allowance must be submitted electronically via EFS or EFS-web and limited to addressing the rejections, objections and requirement made. Any amendment that attempts to: 1) add claims which would result in more than three pending independent claims or more than twenty pending total claims; 2) present claims not encompassed by the pre-examination search or an updated accelerated examination support document; or 3) present claims that are directed a non-elected invention or an invention other than that previously claimed and examined in the application, will be treated as not fully responsive and will not be entered.

   For any amendment to the claims (including any new claim) that is not encompassed by the accelerated examination support document, applicant must provide an updated accelerated examination support document that encompasses the amended or new claims at the time of filing of the amendment.

   To proceed expeditiously with the examination, it is recommended that a reply with amendments made to any claim or with any new claim being added be accompanied by an updated accelerated examination support document or a statement explaining how the amended or new claim is supported by the original accelerated examination support document.

6. Information Disclosure Statement (IDS):
   Any IDS filed during prosecution must be submitted electronically via EFS or EFS-web, accompanied by an updated accelerated examination support document, and be in compliance with 37 CFR 1.97 and 1.98.

7. Post-Allowance Processing:

To expedite processing of the allowed application into a patent, the applicant must: 1) pay the required fees within one month of the date of the Notice of Allowance, and 2) not file any post allowance papers not required by the Office. In no event may the issue fee be paid and accepted later than three months from the date of the Notice of Allowance.

8. After-Final and Appeal Procedures:
   To expedite prosecution, after receiving the final Office action, applicant must: 1) promptly file a notice of appeal, an appeal brief and appeal fees; and 2) not request a pre-appeal brief conference.

   Any amendment, affidavit or other evidence filed after final Office action must comply with applicable rules and the requirements outlined in numbered paragraphs 5 and 6 above.

   On appeal, the application will proceed according to normal appeal procedures. After appeal, the application will again be treated special.

9. Proceedings Outside the Normal Examination Process:
   If the application becomes involved in a proceeding that is outside the normal examination process (e.g., a secrecy order, national security review, interference proceeding, petitions under 37 CFR 1.181, 182 or 183), the application will be treated special before and after such proceeding.

10. Final Disposition:
    The twelve month goal of this accelerated examination procedure ends with a final disposition. The mailing of a final Office action, a Notice of Allowance, the filing of a Notice of Appeal, or the filing of a Request for Continued Examination (RCE) is the final disposition.

If, during prosecution, a paper is not filed electronically using EFS-web, a reply is filed but is not fully responsive, the application is involved in an appeal, or a proceeding outside normal examination process, the application will still be examined expeditiously, however, the final disposition may occur more than twelve months from the filing of the application.

Any inquiry regarding this decision should be directed to the undersigned at (571) 272-3719.
If attempts to reach the undersigned by telephone are unsuccessful, Mano Padmanabhan, Quality Assurance Specialist, can be reached at (571) 272-4210.

/Kakali Chaki/

Kakali Chaki, Quality Assurance Specialist
Technology Center 2100

UNITED STATES PATENT AND TRADEMARK OFFICE

Commissioner for Patents
United States Patent and Trademark Office
P.O. Box 1450
Alexandria, VA 22313-1450
www.uspto.gov

MAXVALUEIP CONSULTING LLC
11204 ALBERMYRTLE ROAD
POTOMAC MD 20854

COPY MAILED

OCT 13 2009

OFFICE OF PETITIONS

In re Application of
Rachel Tzoref et al.
Application No. 12/114,809
Filed: May 4, 2008
Attorney Docket No. IL920070136US1

DECISION ON PETITION
TO WITHDRAW
FROM RECORD

This is a decision on the Request to Withdraw as attorney or agent of record under 37 C.F.R. § 1.36(b), filed September 12, 2009.

The request is **NOT APPROVED.**

The Office will no longer accept address changes to a new practitioner or law firm filed with a Request, absent the filing of a power of attorney to the new representative. The Office will either change the correspondence address of record to the most current address information provided for the assignee of the entire interest who properly became of record under 37 CFR 3.71 or, if no assignee of the entire interest has properly been made of record under 37 CFR 3.71, the most current address information provided for the first named inventor.

Accordingly, the request to withdraw from record cannot be approved because the request to change the correspondence address does not include a proper power of attorney nor is the address that of: (1) the first named inventor; or (2) an assignee of the entire interest under 37 C.F.R 3.71.

All future communications from the Office will continue to be directed to the above-identified address until otherwise properly notified.

Telephone inquiries concerning this decision should be directed to the undersigned at 571-272-4618.

/Kimberly Inabinet/

Kimberly Inabinet
Petitions Examiner
Office of Petitions

UNITED STATES PATENT AND TRADEMARK OFFICE

Commissioner for Patents
United States Patent and Trademark Office
P.O. Box 1450
Alexandria, VA 22313-1450
www.uspto.gov

MAIL

JUL 01 2008

DIRECTOR'S OFFICE
TECHNOLOGY CENTER 2600

MAXVALUEIP CONSULTING LLC
11204 ALBERMYRTLE ROAD
POTOMAC MD 20854

In re Application of:
PATIL, SANDEEP RAMESH, et al.
Serial No.: 12/114,812
Filed: May 4, 2008

Title: **GENDERS-USAGE ASSISTANT FOR COMPOSITION OF ELECTRONIC DOCUMENTS, EMAILS, OR LETTERS**

DECISION ON PETITION TO MAKE SPECIAL FOR NEW APPLICATION UNDER 37 C.F.R. § 1.102 & M.P.E.P. § 708.02

This is a decision on the petition filed on May 4, 2008 requesting that the above-identified application be made special for accelerated examination procedure under 37 C.F.R. § 1.102(d).

The petition to make the application special is **GRANTED**.

The application is eligible for accelerated examination and the petition complies with the conditions for granting the application special status pursuant to the "Change to Practice for Petitions in Patent Applications to Make Special and for Accelerated Examination" published June 26, 2006, in the Federal Register. (71 Fed. Reg. 36323).

The prosecution of the instant application will be conducted expeditiously according to the following guidelines.

1. The application will be docketed to an examiner and taken up for action within two weeks of the date of this decision.

2. Restriction Practice:
   If the examiner determines that the claims are not directed to a single invention, a telephone request to elect one single invention will be made pursuant to MPEP 812.01. As a prerequisite to the grant of this petition, the applicant has agreed to make an oral election, by telephone, without traverse. If the applicant refuses to make an election without traverse, or the examiner cannot reach the applicant after a reasonable effort, the

examiner will treat the first claimed invention (invention defined by claim 1) as having being constructively elected without traverse for examination.

3. Office action:
If it is determined that, after appropriate consultation, there is a potential rejection or any other issue to be addressed, the examiner will telephone the applicant and arrange an interview to discuss and resolve the issue. An Office action, other than a Notice of Allowance and Fee(s) Due (Notice of Allowance), will not be issued unless either: 1) an interview was conducted but did not result in agreed to action that places the application in condition for allowance, or, 2) a determination is made that an interview would be unlikely to result in the application being placed in condition for allowance, and 3) an internal conference has been held to review any rejection of any claim.

4. Time for Reply:
An Office action other than a Notice of Allowance or a final Office action will set a shortened statutory period of one month or thirty days, whichever is longer, for reply with no extension of time available under 37 CFR 1.136(a). Failure to timely file a reply within this non-extendible period for reply will result in the abandonment of the application.

5. Reply by Applicant:
A timely reply to an Office action other than the Notice of Allowance must be submitted electronically via EFS or EFS-web and limited to addressing the rejections, objections and requirement made. Any amendment that attempts to: 1) add claims which would result in more than three pending independent claims or more than twenty pending total claims; 2) present claims not encompassed by the pre-examination search or an updated accelerated examination support document; or 3) present claims that are directed a non-elected invention or an invention other than that previously claimed and examined in the application, will be treated as not fully responsive and will not be entered.

   For any amendment to the claims (including any new claim) that is not encompassed by the accelerated examination support document, applicant must provide an updated accelerated examination support document that encompasses the amended or new claims at the time of filing of the amendment.

   To proceed expeditiously with the examination, it is recommended that a reply with amendments made to any claim or with any new claim being added be accompanied by an updated accelerated examination support document or a statement explaining how the amended or new claim is supported by the original accelerated examination support document.

6. Information Disclosure Statement (IDS):
Any IDS filed during prosecution must be submitted electronically via EFS or EFS-web, accompanied by an updated accelerated examination support document, and be in compliance with 37 CFR 1.97 and 1.98.

7. Post-Allowance Processing:
   To expedite processing of the allowed application into a patent, the applicant must: 1) pay the required fees within one month of the date of the Notice of Allowance, and 2) not file any post allowance papers not required by the Office. In no event may the issue fee be paid and accepted later than three months from the date of the Notice of Allowance.

8. After-Final and Appeal Procedures:
   To expedite prosecution, after receiving the final Office action, applicant must: 1) promptly file a notice of appeal, an appeal brief and appeal fees; and 2) not request a pre-appeal brief conference.

   Any amendment, affidavit or other evidence filed after final Office action must comply with applicable rules and the requirements outlined in numbered paragraphs 5 and 6 above.

   On appeal, the application will proceed according to normal appeal procedures. After appeal, the application will again be treated special.

9. Proceedings Outside the Normal Examination Process:
   If the application becomes involved in a proceeding that is outside the normal examination process (e.g., a secrecy order, national security review, interference proceeding, petitions under 37 CFR 1.181, 182 or 183), the application will be treated special before and after such proceeding.

10. Final Disposition:
    The twelve month goal of this accelerated examination procedure ends with a final disposition. The mailing of a final Office action, a Notice of Allowance, the filing of a Notice of Appeal, or the filing of a Request for Continued Examination (RCE) is the final disposition.

If, during prosecution, a paper is not filed electronically using EFS-web, a reply is filed but is not fully responsive, the application is involved in an appeal, or a proceeding outside normal examination process, the application will still be examined expeditiously, however, the final disposition may occur more than twelve months from the filing of the application.

Any inquiry regarding this decision should be directed to Ken Wieder, Quality Assurance Specialist, at (571) 272-2986.

Kenneth A. Wieder
Quality Assurance Specialist
Technology Center 2600
Communications

UNITED STATES PATENT AND TRADEMARK OFFICE

Commissioner for Patents
United States Patent and Trademark Office
P.O. Box 1450
Alexandria, VA 22313-1450
www.uspto.gov

MAILED

MAR 25 2010

OFFICE OF PETITIONS

ROBERT M. SCHWARTZ, P.A.
P.O. BOX 221470
HOLLYWOOD, FL 33022

In re Application of	:	
Jarret Morrow	:	
Application No. 12/114,863	:	DECISION ON PETITION
Filed: May 5, 2008	:	TO WITHDRAW FROM
Attorney Docket No. NO 672.015	:	RECORD

This is a decision on the request to withdraw as attorney or agent of record under 37 CFR §§ 1.36(b), or 10.40 filed December 31, 2009.

The request is **APPROVED**.

A review of the file record indicates that David W. Barman and the attorneys/agents associated with Customer Number 53437: (1) do not have power of attorney in this patent application[1]; but (2) may be employed or otherwise engaged in the proceedings in this patent application. In view of the present decision, David W. Barman and the attorneys/agents associated with Customer Number 53437 have been withdrawn from the present application and may not prepare or submit papers under 37 C.F.R. § 1.34, or correspond in any manner in this application unless appointed in an acceptable power of attorney under 37 C.F.R. § 1.32(b).

Since the correspondence address listed is not that of an intervening assignee[2] or the sole inventor, all future communications from the Office will continue to be directed to the above-listed address until otherwise notified by applicant.

A review of the record shows no response to the Office action mailed September 17, 2009 has been received. Therefore, this application file is abandoned and will be referred to Technology Center Art Unit 1655.

---

[1] It is noted that a Power of Attorney and Correspondence Address Indication Form was filed on May 5, 2008. However, petitioner failed to file a Statement under 37 CFR 3.73(b). Therefore, the Power of Attorney was improperly accepted.

[2] In order to request or take action in a patent matter, the assignee must establish its ownership of the patent to the satisfaction of the Director. In this regard, a Statement under 37 CFR 3.73(b) must have either: (i) documentary evidence of a chain of title from the original owner to the assignee (*e.g.*, copy of an executed assignment), and a statement affirming that the documentary evidence of the chain of title from the original owner to the assignee was or concurrently is being submitted for recordation pursuant to § 3.11; or (ii) a statement specifying where documentary evidence of a chain of title from the original owner to the assignee is recorded in the assignment records of the Office (*e.g.*, reel and frame number).

Telephone inquires concerning this decision should be directed to the undersigned at (571) 272-3226.

Andrea Smith
Petitions Examiner
Office of Petitions

cc: Jim Hamilton, Northern Holdings
58 Marine Parade Drive, Suiote 813
Etobicoke, Ontario M8V 4G1
CANADA

UNITED STATES PATENT AND TRADEMARK OFFICE

UNITED STATES DEPARTMENT OF COMMERCE
United States Patent and Trademark Office
Address: COMMISSIONER FOR PATENTS
P.O. Box 1450
Alexandria, Virginia 22313-1450
www.uspto.gov

APPLICATION NUMBER	FILING OR 371(C) DATE	FIRST NAMED APPLICANT	ATTY. DOCKET NO./TITLE
12/114,863	05/05/2008	Jarret Morrow	NO 672.015

CONFIRMATION NO. 4005

POWER OF ATTORNEY NOTICE

53437
ROBERT M. SCHWARTZ, P.A.
P.O. BOX 221470
HOLLYWOOD, FL 33022

OC000000040758330

Date Mailed: 03/23/2010

NOTICE REGARDING CHANGE OF POWER OF ATTORNEY

This is in response to the Power of Attorney filed 12/31/2009.

- The withdrawal as attorney in this application has been accepted. Future correspondence will be mailed to the new address of record. 37 CFR 1.33.

/amsmith/

Office of Data Management, Application Assistance Unit (571) 272-4000, or (571) 272-4200, or 1-888-786-0101

UNITED STATES PATENT AND TRADEMARK OFFICE

Commissioner for Patents
United States Patent and Trademark Office
P.O. Box 1450
Alexandria, VA 22313-1450
www.uspto.gov

DYKAS, SHAVER & NIPPER, LLP
P.O. BOX 877
BOISE ID 83701-0877

MAILED

APR 07 2009

OFFICE OF PETITIONS

In re Application of	:	
Daniel Mark Aragon	:	
Application No. 12/114,926	:	DECISION ON PETITION
Filed: May 5, 2008	:	TO WITHDRAW
Attorney Docket No. INDI102	:	FROM RECORD
	:	

This is a decision on the Request to Withdraw as attorney or agent of record under 37 C.F.R. § 1.36(b), filed March 6, 2009.

The request is **NOT APPROVED**.

A grantable request to withdraw as attorney/agent of record must be signed by every attorney/agent seeking to withdraw or contain a clear indication that one attorney is signing on behalf of another/others.

The request cannot be approved because practitioners have not certified that they have notified the client of any responses that may be due and the time frame within which the client must respond.

All future communications from the Office will continue to be directed to the above-listed address until otherwise notified by applicant.

Telephone inquiries concerning this decision should be directed to undersigned at 571-272-1642. All other inquiries concerning the examination or status of this application should be directed to the Technology Center.

/AMW/
April M. Wise
Petitions Examiner
Office of Petitions

cc: DANIEL MARK ARAGON
525 N. STEELHEAD WAY
BOISE, ID 83704

UNITED STATES PATENT AND TRADEMARK OFFICE

Commissioner for Patents
United States Patent and Trademark Office
P.O. Box 1450
Alexandria, VA 22313-1450
www.uspto.gov

DYKAS, SHAVER & NIPPER, LLP
P.O. BOX 877
BOISE, ID 83701-0877

MAILED

MAY 28 2009

OFFICE OF PETITIONS

In re Application of	:	
Daniel Mark Aragon	:	
Application No. 12/114,926	:	DECISION ON PETITION
Filed: May 5, 2008	:	TO WITHDRAW
Attorney Docket No. INDI102	:	FROM RECORD
	:	

This is a decision on the renewed Request to Withdraw as attorney or agent of record under 37 C.F.R. § 1.36(b), filed April 15, 2009.

The request is **NOT APPROVED**.

A grantable request to withdraw as attorney/agent of record must be signed by every attorney/agent seeking to withdraw or contain a clear indication that one attorney is signing on behalf of another/others.

The request cannot be approved because practitioners were not appointed by customer number. In order to withdraw by customer number practitioners must be appointed by customer number.

All future communications from the Office will continue to be directed to the above-listed address until otherwise notified by applicant.

Telephone inquiries concerning this decision should be directed to undersigned at 571-272-1642. All other inquiries concerning the examination or status of this application should be directed to the Technology Center.

/AMW/
April M. Wise
Petitions Examiner
Office of Petitions

cc: DANIEL MARK ARAGON
525 N. STEELHEAD WAY
BOISE, ID 83704

UNITED STATES PATENT AND TRADEMARK OFFICE

Commissioner for Patents
United States Patent and Trademark Office
P.O. Box 1450
Alexandria, VA 22313-1450
www.uspto.gov

DYKAS, SHAVER & NIPPER, LLP
P.O. BOX 877
BOISE, ID 83701-0877

COPY MAILED
JAN 19 2010

In re Application of
Daniel Mark Aragon
Application No. 12/114,926
Filed: May 5, 2008
Attorney Docket No. INDI102

DECISION ON PETITION
TO WITHDRAW
FROM RECORD

This is a decision on the renewed Request to Withdraw as attorney or agent of record under 37 C.F.R. § 1.36(b), filed November 6, 2009.

The request is **APPROVED**.

A grantable request to withdraw as attorney/agent of record must be signed by every attorney/agent seeking to withdraw or contain a clear indication that one attorney is signing on behalf of another/others.

The request was signed by Robert L. Shaver on behalf of all attorneys of record who are associated with this application. All attorneys/agents associated with this application have been withdrawn. Applicant is reminded that there is no attorney of record at this time.

The correspondence address of record has been changed and the new correspondence address is the address indicated below.

There are no pending Office actions at the present time.

Telephone inquiries concerning this decision should be directed to undersigned at 571-272-1642. All other inquiries concerning the examination or status of this application should be directed to the Technology Center.

/AMW/
April M. Wise
Petitions Examiner
Office of Petitions

cc: DANIEL MARK ARAGON
525 N. STEELHEAD WAY
BOISE, ID 83704

UNITED STATES PATENT AND TRADEMARK OFFICE

UNITED STATES DEPARTMENT OF COMMERCE
United States Patent and Trademark Office
Address: COMMISSIONER FOR PATENTS
P.O. Box 1450
Alexandria, Virginia 22313-1450
www.uspto.gov

APPLICATION NUMBER	FILING OR 371(C) DATE	FIRST NAMED APPLICANT	ATTY. DOCKET NO./TITLE
12/114,926	05/05/2008	DANIEL MARK ARAGON	INDI102

CONFIRMATION NO. 4130

POWER OF ATTORNEY NOTICE

21658
DYKAS, SHAVER & NIPPER, LLP
P.O. BOX 877
BOISE, ID 83701-0877

OC000000039484569

Date Mailed: 01/05/2010

NOTICE REGARDING CHANGE OF POWER OF ATTORNEY

This is in response to the Power of Attorney filed 11/06/2009.

- The withdrawal as attorney in this application has been accepted. Future correspondence will be mailed to the new address of record. 37 CFR 1.33.

/amwise/

Office of Data Management, Application Assistance Unit (571) 272-4000, or (571) 272-4200, or 1-888-786-0101

UNITED STATES PATENT AND TRADEMARK OFFICE

Commissioner for Patents
United States Patent and Trademark Office
P.O. Box 1450
Alexandria, VA 22313-1450
www.uspto.gov

MAILED
FROM DIRECTORS OFFICE

JUN 05 2008

TECHNOLOGY CENTER 3600

BARLOW, JOSEPHS & HOLMES, LTD
101 DYER STREET
5th FLOOR
PROVIDENCE, RI 02903

In re application of
Gluck
Application No. 12/114,996
Filed: May 05, 2008
For: SYSTEM AND METHOD FOR INCREASING PURCHASE CONVERSION RATES

DECISION ON PETITION TO MAKE SPECIAL FOR NEW APPLICATION UNDER 37 CFR 1.102

This is a decision on the petition filed on May 05, 2008 to make the above-identified application special for accelerated examination procedure under 37 C.F.R. § 1.102(d).

The petition to make the application special is **DENIED**.

REGULATION AND PRACTICE

A grantable petition to make special under 37 C.F.R. § 1.102(d) and pursuant to the "Change to Practice for Petitions in Patent Applications to Make Special and for Accelerated Examination (AE)" published in the Federal Register on June 26, 2006 (71 Fed. Reg. 36323), must satisfy the following conditions:

I. Conditions Regarding the Application:

1. the application must be a non-reissue utility or design application filed under 37 CFR 1.111(a);

2. the application, the petition and the required fees must be filed electronically using the USPTO's electronic filing system (EFS), or EFS-web; if not filed electronically, a statement asserting that EFS and EFS-web were not available during the normal business hours.

3. at the time of filing, the application must be complete under 37 CFR 1.51 and in condition for examination;

4. the application must contain three or fewer independent claims and twenty or fewer total claims and the claims must be directed to a single invention.

II. Conditions Regarding the Petition:

The petition must:

1. be filed with the application;

2. include a statement that applicant agrees not to separately argue the patentability of any independent claim during any appeal in the application;

3. include a statement that applicant agrees to make an election without traverse in a telephone interview.

4. include a statement that applicant agrees to conduct such an interview when requested by the examiner.

5. include a statement, made based on a good faith belief, that a preexamination search in compliance with the following requirements, was conducted, including an identification of the field of search by United States class and subclass, where applicable, and for database searches, the search logic or chemical structure or sequence used as a query, the name of the file(s) searched and the database service, and the date of the search.

The preexamination search must:

5.1 involve U.S. patents and patent application publications, foreign patent documents, and non-patent literature, unless the applicant can justify with reasonable certainty that no references more pertinent than those already identified are likely to be found in the eliminated sources and includes such a justification with this statement;

5.2. be directed to the claimed invention and encompass all of the features of the claims, giving the claims the broadest reasonable interpretation;

5.3. encompass the disclosed features that may be claimed.

6. must provide in support of the petition an accelerated examination support document.

An accelerated examination support document must include:

6.1. an information disclosure statement (IDS) in compliance with 37 CFR 1.98 citing each reference deemed most closely related to the subject matter of each of the claims;

6.2. an identification of all the limitations in the claims that are disclosed by the reference specifying where the limitation is disclosed in the cited reference;

6.3. a detailed explanation of how each of the claims is patentable over the references cited with particularity required by 37 CFR 1.111(b) and (c);

6.4. a concise statement of the utility of the invention as defined in each of the independent claims (unless the application is a design application);

6.5. a showing of where each limitation of the claims finds support under 35 USC 112, first paragraph, in the written description of the specification. If applicable, the showing must also identify: (1) each means- (or step) plus-function claim element that invokes consideration under 35 USC 112, sixth paragraph; and (2) the structure, material, or acts

in the specification that corresponds to each means- (or step) plus-function claim element that invokes consideration under 35 USC 112, sixth paragraph; if the application claims the benefit of one or more applications under title 35, United States Code, the showing must also include where each limitation of the claims finds support under 35 USC 112, first paragraph, in each such application in which such supports exists;

6.6. an identification of any cited references that may be disqualified under 35 USC 103(c).

REVIEW OF FACTS

The petition in this case fails to comply with condition I.3, at the time of filing, the application must be complete under 37 CFR 1.51 and in condition for examination. At the time of filing, the drawings were non-compliant.

The petition meets all other requirements.

The petition fails to meet the required conditions to be accorded special status under the accelerated examination procedure.

DECISION

For the above stated reason, the petition is **DENIED**. The application will therefore be taken up by the examiner for action in its regular turn.

Any inquiry regarding this decision should be directed to Robert Weinhardt, Business Practice Specialist, at (571) 272-6633. Inquiries may also be directed to Michael Cuff at (571) 272-6778.

Robert A. Weinhardt,
Business Practice Specialist
Technology Center 3600

RW/MAC/06/03/08

UNITED STATES PATENT AND TRADEMARK OFFICE

Commissioner for Patents
United States Patent and Trademark Office
P.O. Box 1450
Alexandria, VA 22313-1450
www.uspto.gov

MICHAEL BEST & FRIEDRICH LLP
100 E WISCONSIN AVENUE
SUITE 3300
MILWAUKEE WI 53202

COPY MAILED
MAR 02 2010

In re Application of	:	
David A. Venhaus	:	
Application No. 12/115,020	:	DECISION GRANTING PETITION
Filed: May 5, 2008	:	UNDER 37 CFR 1.313(c)(2)
Attorney Docket No. 023821-9002-01	:	

This is a decision on the petition under 37 CFR 1.313(c)(2), filed March 1, 2010, to withdraw the above-identified application from issue after payment of the issue fee.

The petition is **GRANTED**.

The above-identified application is withdrawn from issue for consideration of a submission under 37 CFR 1.114 (request for continued examination). *See* 37 CFR 1.313(c)(2).

Petitioner is advised that the issue fee paid on January 20, 2010 cannot be refunded. If, however, this application is again allowed, petitioner may request that it be applied towards the issue fee required by the new Notice of Allowance.[1]

Telephone inquiries should be directed to the undersigned at (571) 272-3208.

This application is being referred to Technology Center AU 2875 for processing of the request for continued examination under 37 CFR 1.114 and for consideration of the concurrently filed IDS.

/Karen Creasy/
Karen Creasy
Petitions Examiner
Office of Petitions

---

[1] *The request to apply the issue fee to the new Notice may be satisfied by completing and returning the new Part B – Fee(s) Transmittal Form (along with any balance due at the time of submission). Petitioner is advised that the Issue Fee Transmittal Form must be completed and timely submitted to avoid abandonment of the application.*

UNITED STATES PATENT AND TRADEMARK OFFICE

Commissioner for Patents
United States Patent and Trademark Office
P.O. Box 1450
Alexandria, VA 22313-1450
www.uspto.gov

PRIYA SINHA CLOUTIER
320 DAYTON ST., STE 260
EDMONDS WA 98020

COPY MAILED

SEP 0 9 2009

OFFICE OF PETITIONS

In re Application of	:	
Rick Ridgeway	:	DECISION ON PETITION
Application No. 12/115,035	:	TO WITHDRAW
Filed: May 5, 2008	:	FROM RECORD
Attorney Docket No. 208-001-08	:	

This is a decision on the Request to Withdraw as attorney or agent of record under 37 C.F.R. § 1.36(b), filed July 29, 2009.

The request is **APPROVED**.

A grantable request to withdraw as attorney/agent of record must be signed by every attorney/agent seeking to withdraw or contain a clear indication that one attorney is signing on behalf of another/others. The Office will require the practitioner(s) to certify that he, she or they have: (1) given reasonable notice to the client, prior to the expiration of the reply period, which the practitioner(s) intends to withdraw from employment; (2) delivered to the client or a duly authorized representative of the client all papers and property (including funds) to which the client is entitled; and (3) notified the client of any replies that may be due and the time frame within which the client must respond, pursuant to 37 CFR 10.40 (c).

The request was signed by Priya Sinha Cloutier on behalf of all attorneys of record who are associated with Customer No. 69049.

All attorneys/agents associated with Customer Number 69049 have been withdrawn. Applicant is reminded that there is no attorney of record at this time.

All future correspondence will be directed to the first named inventor at the address indicated below.

Currently, there is an outstanding Office action mailed April 2, 2009 that requires a reply.

Telephone inquires concerning this decision should be directed to the undersigned at (571) 272-7751. All other inquires concerning either the examination or status of the application should be directed to the Technology Center.

Joan Olszewski

Joan Olszewski
Petitions Examiner
Office of Petitions

cc: Rick Ridgeway
24007 49th Pl. W.
Mountlake Terrace WA 98043

UNITED STATES PATENT AND TRADEMARK OFFICE

Commissioner for Patents
United States Patent and Trademark Office
P.O. Box 1450
Alexandria, VA 22313-1450
www.uspto.gov

MAIL

JUN 16 2010

DIRECTOR'S OFFICE
TECHNOLOGY CENTER 2600

FAEGRE & BENSON LLP
PATENT DOCKETING - INTELLECTUAL PROPERTY
2200 WELLS FARGO CENTER
90 SOUTH SEVENTH STREET
MINNEAPOLIS MN 55402-3901

In re Application of	:	
HOFHAUSER, ANDREAS et al	:	DECISION ON REQUEST TO
Application No. 12/115,059	:	PARTICIPATE IN PATENT
Filed: May 05, 2008	:	PROSECUTION HIGHWAY
Attorney Docket No. 364712	:	PILOT PROGRAM AND PETITION
	:	TO MAKE SPECIAL UNDER
	:	37 CFR 1.102(d)

This is a decision on the request to participate in the Patent Prosecution Highway (PPH) pilot program and the petition under 37 CFR 1.102(d), filed May 10, 2010, to make the above-identified application special.

The request and petition are **DISMISSED**.

A grantable request to participate in the PPH pilot program and petition to make special require:

(1) The U.S. application must validly claim priority under 35 U.S.C. 119(a) to one or more applications filed in the EPO;
(2) Applicant must submit a copy of the allowable/patentable claim(s) from the EPO application(s);
(3) All the claims in the U.S. application must sufficiently correspond or be amended to sufficiently correspond to the allowable/patentable claim(s) in the EPO application(s);
(4) Examination of the U.S. application has not begun;
(5) Applicant must submit a copy of all the office actions from each of the EPO application(s) containing the allowable/patentable claim(s);
(6) Applicant must submit an IDS listing the documents cited by the EPO examiner in the EPO office action along with copies of documents except U.S. patents or U.S. patent application publications; and
(7) The required petition fee under 37 CFR 1.17(h).

The request to participate in the PPH pilot program and petition is deficient as follows:

Petitioner has not complied with item 2 above in that the petition fails to include a complete copy of allowed claim 1 from the EPO application. Only a portion of allowed claim 1 starting with step (j) filed with petition on May 05, 2010 is currently of record.

Applicant is given a time period of **ONE MONTH or THIRTY DAYS**, whichever is longer, from the mailing date of this decision to correct the deficiencies. **NO EXTENSION OF TIME UNDER 37 CFR 1.136 IS PERMITTED.** If the deficiencies are not corrected with the time period given, the application will await action in its regular turn.

Any Response must be submitted by EFS web.

Telephone inquiries concerning this decision should be directed to Michael Horabik at 571-272-3068.

All other inquiries concerning the examination or status of the application should be directed to Patent Application Information Retrieval (PAIR) system.

/Michael Horabik/

Michael Horabik
Quality Assurance Specialist
Technology Center 2600
Communications

UNITED STATES PATENT AND TRADEMARK OFFICE

Commissioner for Patents
United States Patent and Trademark Office
P.O. Box 1450
Alexandria, VA 22313-1450
www.uspto.gov

MCKINNEY LAW, LLC
390 N. ORANGE AVENUE, SUITE 2300
ORLANDO, FL 32801

COPY MAILED

JUN 0 9 2008

In re Application of	:	
WOLF, Daniel	:	
Application No. 12/115,074	:	DECISION ON PETITION
Filed: May 5, 2008	:	TO MAKE SPECIAL UNDER
Attorney Docket No. **827-02**	:	37 CFR 1.102(c)(1)
	:	

This is a decision on the petition under 37 CFR 1.102(c)(1), filed May 5, 2008, to make the above-identified application special based on applicant's age as set forth in M.P.E.P. § 708.02, Section IV.

The petition is **GRANTED.**

A grantable petition to make an application special under 37 CFR 1.102(c)(1) and MPEP § 708.02, Section IV: Applicant's Age must be accompanied by evidence showing that at least one of the applicants is 65 years of age, or more, such as a birth certificate or a statement by applicant. No fee is required

The instant petition includes the driver's license of inventor Daniel C. Wolf, attesting to his age. Accordingly, the above-identified application will be accorded "special" status.

Inquiries concerning either the examination or status of the application should be directed to the Office of Patent Application Processing at 571-272-4000.

Telephone inquiries concerning this decision should be directed to the undersigned at 571-272-7253.

The application is being forwarded to the office of Initial Patent Examination for processing. This application will be accorded "special" status when pre-examination processing is done.

Monica A. Graves
Petitions Examiner
Office of Petitions

UNITED STATES PATENT AND TRADEMARK OFFICE

UNITED STATES DEPARTMENT OF COMMERCE
United States Patent and Trademark Office
Address: COMMISSIONER FOR PATENTS
P.O. Box 1450
Alexandria, Virginia 22313-1450
www.uspto.gov

APPLICATION NO.	FILING DATE	FIRST NAMED INVENTOR	ATTORNEY DOCKET NO.	CONFIRMATION NO.
12/115,078	05/05/2008	Yuji IMAI	740145-359	4412

25570 7590 12/03/2009
ROBERTS MLOTKOWSKI SAFRAN & COLE, P.C.
Intellectual Property Department
P.O. Box 10064
MCLEAN, VA 22102-8064

EXAMINER
TRAN, THIEN F

ART UNIT	PAPER NUMBER
2895	

NOTIFICATION DATE	DELIVERY MODE
12/03/2009	ELECTRONIC

Please find below and/or attached an Office communication concerning this application or proceeding.

The time period for reply, if any, is set in the attached communication.

Notice of the Office communication was sent electronically on above-indicated "Notification Date" to the following e-mail address(es):

lgallaugher@rmsclaw.com
dbeltran@rmsclaw.com
bdiaz@rmsclaw.com

UNITED STATES PATENT AND TRADEMARK OFFICE

Commissioner for Patents
United States Patent and Trademark Office
P.O. Box 1450
Alexandria, VA 22313-1450
www.uspto.gov

ROBERTS MLOTKOWSKI SAFRAN & COLE, P.C.
Intellectual Property Department
P.O. Box 10064
MCLEAN VA 22102-8064

In re Application of	
Yuji IMAI	**: DECISION ON REQUEST TO**
Application No.: 12/115,078	**: PARTICIPATE IN THE PATENT**
Filed: 05 May 2008	**: PROSECUTION HIGHWAY**
Attorney Docket No.: 740145-359	**: PROGRAM AND PETITION**
For: LED DEVICE AND METHOD BY	**: TO MAKE SPECIAL UNDER**
WHICH IT IS PRODUCED	**: 37 CFR 1.102(d)**

This is a decision on the request to participate in the Patent Prosecution Highway (PPH) program and the petition under 37 CFR 1.102(d), filed 01 October 2009, to make the above-identified application special.

The request and petition are **DISMISSED**.

Discussion

A grantable request to participate in the PPH pilot program and petition to make special require:

1. The U.S. application is

    a. a Paris Convention application which either
        i. validly claims priority under 35 U.S.C. 119(a) and 37 CFR 1.55 to one or more applications filed in the JPO, or
        ii. validly claims priority to a PCT application that contains no priority claims,

    or

    b. a national stage application under the PCT (an application which entered the national stage in the U.S. from a PCT international application after compliance with 35 U.S.C. 371), which PCT application
        i. validly claims priority to an application filed in the JPO, or
        ii. validly claims priority to a PCT application that contains no priority claims, or
        iii. contains no priority claim,

    or

c. a so-called bypass application filed under 35 U.S.C. 111(a) which validly claims benefit under 35 U.S.C. 120 to a PCT application, which PCT application
    i. validly claims priority to an application filed in the JPO, or
    ii. validly claims priority to a PCT application that contains no priority claims, or
    iii. contains no priority claim;

2. Applicant must submit a copy of:
    a. The allowable/patentable claim(s) from the JPO application(s);
    b. An English translation of the allowable/patentable claim(s) and
    c. A statement that the English translation is accurate;
3. Applicant must:
    a. Ensure all the claims in the U.S. application must sufficiently correspond or be amended to sufficiently correspond to the allowable/patentable claim(s) in the JPO application(s) and
    b. Submit a claims correspondence table in English;
4. Examination of the U.S. application has <u>not</u> begun;
5. Applicant must submit:
    a. Documentation of prior office action:
        i. a copy of the office action(s) just prior to the "Decision to Grant a Patent" from each of the JPO application(s) containing the allowable/patentable claim(s) or
        ii. if the allowable/patentable claims(s) are from a "Notification of Reasons for Refusal" then the Notification of Reasons for Refusal or
        iii. if the JPO application is a first action allowance then no office action from the JPO is necessary should be indicated on the request/petition form;
    b. An English language translation of the JPO Office action from (5)(a)(i)-(ii) above
    c. A statement that the English translation is accurate;
6. Applicant must submit:
    a. An IDS listing the documents cited by the JPO examiner in the JPO office action (unless already submitted in this application)
    b. Copies of the documents except U.S. patents or U.S. patent application publications (unless already submitted in this application);
7. The required petition fee under 37 CFR 1.17(h).

Conditions (1), (2), (4), (5), and (7) above are considered to have been met. However, the request to participate in the PPH pilot program and petition fails meet condition (3) and (6).

Regarding the requirement of condition (3), claims 5-7 of the instant application do not substantially correspond to claims of JP 2007-130342. Specifically, claim 5 of the instant application does not require the forming gas to be hydrogen and nitrogen as set forth in claim 5 of JP 2007-130342, claim 6 of the instant application includes the limitation of the chip being mounted "simultaneously", and claim 7 of the instant application is not found in 2007-130342.

Regarding the requirement of condition (6), the IDS filed 01 October 2009 failed to cite Japanese Pre-Grant Publication 2004-327982 and Japanese Pre-Grant Publication 2003-301203 which were cited by in the JPO office action.

A proper response must include:

(a) an amendment to claims 5-7 of the instant application to ensure that they substantially correspond to claims 5 and 6 of JP 2007-130342 or cancellation of the claims.

(b) an IDS containing Japanese Pre-Grant Publication 2004-327982 and Japanese Pre-Grant Publication 2003-301203.

(c) a copy of Japanese Pre-Grant Publication 2004-327982 and Japanese Pre-Grant Publication 2003-301203.

Applicant is given **ONE** opportunity within a time period of **ONE MONTH or THIRTY DAYS**, whichever is longer, from the mailing date of this decision to correct the deficiencies. **NO EXTENSION OF TIME UNDER 37 CFR 1.136 IS PERMITTED.** If the deficiencies are not corrected with the time period given, the application will await action in its regular turn.

Response must be filed via the Electronic Filing System (EFS) with the Document Code PPH.REQUEST. Any preliminary amendments and IDS submitted with the PPH documents must be separately indexed as a preliminary amendment and IDS, respectively.

Telephone inquiries concerning this decision should be directed to Lee W. Young at 571-272-4549.

All other inquiries concerning the examination or status of the application is accessible in the PAIR system at http://www.uspto.gov/ebc/index.html.

Lee W. Young
TQAS Technology Center 2800 - Semiconductors,
Electrical & Optical Systems & Components

UNITED STATES PATENT AND TRADEMARK OFFICE

UNITED STATES DEPARTMENT OF COMMERCE
United States Patent and Trademark Office
Address: COMMISSIONER FOR PATENTS
P.O. Box 1450
Alexandria, Virginia 22313-1450
www.uspto.gov

APPLICATION NO.	FILING DATE	FIRST NAMED INVENTOR	ATTORNEY DOCKET NO.	CONFIRMATION NO.
12/115,078	05/05/2008	Yuji IMAI	740145-359	4412

25570 7590 01/21/2010
ROBERTS MLOTKOWSKI SAFRAN & COLE, P.C.
Intellectual Property Department
P.O. Box 10064
MCLEAN, VA 22102-8064

EXAMINER
TRAN, THIEN F

ART UNIT	PAPER NUMBER
2895	

NOTIFICATION DATE	DELIVERY MODE
01/21/2010	ELECTRONIC

Please find below and/or attached an Office communication concerning this application or proceeding.

The time period for reply, if any, is set in the attached communication.

Notice of the Office communication was sent electronically on above-indicated "Notification Date" to the following e-mail address(es):

lgallaugher@rmsclaw.com
dbeltran@rmsclaw.com
bdiaz@rmsclaw.com

UNITED STATES PATENT AND TRADEMARK OFFICE

Commissioner for Patents
United States Patent and Trademark Office
P.O. Box 1450
Alexandria, VA 22313-1450
www.uspto.gov

ROBERTS MLOTKOWSKI SAFRAN & COLE, P.C.
Intellectual Property Department
P.O. Box 10064
MCLEAN VA 22102-8064

In re Application of	
Yuji IMAI	**: DECISION ON REQUEST TO**
Application No.: 12/115,078	**: PARTICIPATE IN THE PATENT**
Filed: 05 May 2008	**: PROSECUTION HIGHWAY**
Attorney Docket No.: 740145-359	**: PROGRAM AND PETITION**
For: LED DEVICE AND METHOD BY	**: TO MAKE SPECIAL UNDER**
WHICH IT IS PRODUCED	**: 37 CFR 1.102(d)**

This is a decision on the request to participate in the Patent Prosecution Highway (PPH) program and the petition under 37 CFR 1.102(d), filed 01 October 2009 and renewed on 04 January 2010, to make the above-identified application special.

The request and petition are **GRANTED**.

Discussion

A grantable request to participate in the PPH pilot program and petition to make special require:

1. The U.S. application is

    a. a Paris Convention application which either
        i. validly claims priority under 35 U.S.C. 119(a) and 37 CFR 1.55 to one or more applications filed in the JPO, or
        ii. validly claims priority to a PCT application that contains no priority claims,

    or

    b. a national stage application under the PCT (an application which entered the national stage in the U.S. from a PCT international application after compliance with 35 U.S.C. 371), which PCT application
        i. validly claims priority to an application filed in the JPO, or
        ii. validly claims priority to a PCT application that contains no priority claims, or
        iii. contains no priority claim,

    or

c. a so-called bypass application filed under 35 U.S.C. 111(a) which validly claims benefit under 35 U.S.C. 120 to a PCT application, which PCT application
    i. validly claims priority to an application filed in the JPO, or
    ii. validly claims priority to a PCT application that contains no priority claims, or
    iii. contains no priority claim;

2. Applicant must submit a copy of:
    a. The allowable/patentable claim(s) from the JPO application(s);
    b. An English translation of the allowable/patentable claim(s) and
    c. A statement that the English translation is accurate;
3. Applicant must:
    a. Ensure all the claims in the U.S. application must sufficiently correspond or be amended to sufficiently correspond to the allowable/patentable claim(s) in the JPO application(s) and
    b. Submit a claims correspondence table in English;
4. Examination of the U.S. application has <u>not</u> begun;
5. Applicant must submit:
    a. Documentation of prior office action:
        i. a copy of the office action(s) just prior to the "Decision to Grant a Patent" from each of the JPO application(s) containing the allowable/patentable claim(s) or
        ii. if the allowable/patentable claims(s) are from a "Notification of Reasons for Refusal" then the Notification of Reasons for Refusal or
        iii. if the JPO application is a first action allowance then no office action from the JPO is necessary should be indicated on the request/petition form;
    b. An English language translation of the JPO Office action from (5)(a)(i)-(ii) above
    c. A statement that the English translation is accurate;
6. Applicant must submit:
    a. An IDS listing the documents cited by the JPO examiner in the JPO office action (unless already submitted in this application)
    b. Copies of the documents except U.S. patents or U.S. patent application publications (unless already submitted in this application);
7. The required petition fee under 37 CFR 1.17(h).

The request to participate in the PPH pilot program and petition comply with the above requirements. Accordingly, the above-identified application has been accorded "special" status.

Telephone inquiries concerning this decision should be directed to Lee W. Young at 571-272-4549.

All other inquiries concerning the examination or status of the application is accessible in the PAIR system at http://www.uspto.gov/ebc.index.html.

This application will be forwarded to the examiner for action on the merits commensurate with this decision.

Lee W. Young
TQAS
Technology Center 2800 – Semiconductors
Electrical & Optical Systems & Components

UNITED STATES PATENT AND TRADEMARK OFFICE

UNITED STATES DEPARTMENT OF COMMERCE
United States Patent and Trademark Office
Address: COMMISSIONER FOR PATENTS
P.O. Box 1450
Alexandria, Virginia 22313-1450
www.uspto.gov

FROMMER LAWRENCE & HAUG
745 FIFTH AVENUE- 10TH FL.
NEW YORK, NY 10151

Mail Date: 04/21/2010

Applicant	: Dana Eagles	: DECISION ON REQUEST FOR
Patent Number	: 7579291	: RECALCULATION of PATENT
Issue Date	: 08/25/2009	: TERM ADJUSTMENT IN VIEW
Appliction No	: 12/115,097	: OF WYETH AND NOTICE OF INTENT TO
Filed	: 05/05/2008	: ISSUE CERTIFICATE OF CORRECTION
		:

The Request for Recalculation is **GRANTED** to the extent indicated.

The patent term adjustment has been determined to be **0** days. The USPTO will *sua sponte* issue a certificate of correction reflecting the amount of PTA days determined by the recalculation.

Prior to the issuance of the certificate of correction, the USPTO will afford patentee an opportunity to be heard and request reconsideration. Accordingly, patentee has **one month or thirty (30) days**, whichever is longer, to file a request for reconsideration of this patent term adjustment calculation. See 35 U.S.C. 154(b)(3)(B)(ii) and 37 CFR 1.322(a)(4). No extensions of time will be granted under 37 CFR 1.136.

Patentee should use document code PET.OP if electronically filing a request for reconsideration of this patent term adjustment calculation. The patentee must also include the information required by 37 CFR 1.705(b)(2) and the fee required by 37 CFR 1.18(e). If patentee does not file a timely request for reconsideration of this patent term adjustment calculation including the information required by 37 CFR 1.705(b)(2) and the fee required by 37 CFR 1.18(e), the USPTO will issue a certificate of correction reflecting the PTA determination noted above.

Patentee should be aware that in order to preserve the right to review in the United States District Court for the District of Columbia of the USPTO patent term adjustment determination, patentee must ensure that he or she also take the steps required under 35 U.S.C. 154(b)(4)(A) in a timely manner. Nothing in the request for recalculation should be construed as providing an alternative time frame for commencing a civil action under 35 U.S.C. 154(b)(4)(A).

Any questions concerning this decision should be directed to the Office of Patent Legal Administration at 571-272-7702.

UNITED STATES PATENT AND TRADEMARK OFFICE

Commissioner for Patents
United States Patent and Trademark Office
P.O. Box 1450
Alexandria, VA 22313-1450
www.uspto.gov

ZARLEY LAW FIRM P.L.C.
CAPITAL SQUARE
400 LOCUST, SUITE 200
DES MONIES, IA 50309-2350

MAILED

APR 19 2010

OFFICE OF PETITIONS

Applicant: Jamie Zimmerman
Appl. No.: 12/115,116
Filing Date: May 5, 2008
Title: APPARATUS FOR REMOVING SCENT FROM CLOTHING
Attorney Docket No.: P07174US0
Pub. No.: US 2009/0272006 A1
Pub. Date: November 5, 2009

This is a decision on the request for a corrected patent application publication under 37 CFR 1.221(b), received on November 12, 2009, for the above-identified application.

The request is DISMISSED.

Applicant requests that the application be republished because the patent application publication contains material errors on the front page of the publication wherein the name of the inventor "Jamie Zimmerman" is incorrectly listed as "Zimmerman Jamie".

37 CFR 1.221 (b) is applicable "only when the Office makes a material mistake which is apparent from Office records.... Any request for a corrected publication or revised patent application publication other than provided as provided in paragraph (a) of this section must be filed within two months from the date of the patent application publication. This period is not extendable." A material mistake must affect the public's ability to appreciate the technical disclosure of the patent application publication, to determine the scope of the patent application publication, or to determine the scope of the provisional rights that an applicant may seek to enforce upon issuance of a patent. [1]

The error on the front page of the publication wherein the inventor name "Jamie Zimmerman" is listed as "Zimmerman Jamie" may be an Office error, but it is not a material Office error under 37 CFR 1.221. The misprinting of the inventor's name does not affect the understanding of the application. The mistake does not affect the public's ability to appreciate the technical disclosure of the patent application publication, or determine the scope of the patent application publication or determine the scope of the provisional rights that an applicant may seek to enforce upon issuance of a patent.

[1] Changes to Implement Eighteen-Month Publication of Patent Applications, 65 FR 57023, 57038 (Sept. 20, 2000), 1239, Off. Gaz. Pat. Office Notices 63, 75 (Oct. 10, 2000) (final rule).

The ADS filed with the application on May 5, 2008 listed the applicant as "Zimmerman Jamie".

On May 16 2008 a Filing Receipt was mailed by the Office, which incorrectly listed the applicant's name as "Zimmerman Jamie". To avoid this type of problem in the future, applicant's representative should review the filing receipt and make a request for a corrected filing receipt prior to export of the publication to the publisher.

The Supplemental ADS received on November 11, 2009 is not in accordance with 37 CFR 1.76(c).

The applicant is advised that a "request for republication of an application previously published" may be filed under 37 CFR 1.221(a). Such a request for republication "must include a copy of the application compliance with the Office's electronic filing system requirements and be accompanied by the publication fee set forth in § 1.18(d) and the processing fee set forth in § 1.17(i)." If the request for republication does not comply with the electronic filing system requirements, the republication will not take place and the publication fee set forth in § 1.18(d) will be refunded. The processing fee will be retained.

A guide for filing a request for a Pre-Grant Publication, such as a request for republication, may be found on the link below:

http://www.uspto.gov/ebc/portal/tutorials.htm

Any request for republication under 37 CFR 1.221(a), must be submitted via the EFS system, as a "Pre-Grant Publication" and questions or request for reconsideration of the decision, should be addressed as follows:

By mail to: Mail Stop PGPUB
Commissioner for Patents
P.O. Box 1450
Alexandria, Va. 22313-1450

Inquiries relating to this matter may be directed to Mark Polutta at (571) 272-7709.

Mark Polutta
Senior Legal Advisor
Office of Patent Legal Administration
Office of the Deputy Commissioner
for Patent Examination Policy

UNITED STATES PATENT AND TRADEMARK OFFICE

UNDER SECRETARY OF COMMERCE FOR INTELLECTUAL PROPERTY AND
DIRECTOR OF THE UNITED STATES PATENT AND TRADEMARK OFFICE
WASHINGTON, DC 20231
www.uspto.gov

MAILED
FROM DIRECTOR'S OFFICE

MAY 28 2008

TECHNOLOGY CENTER 3600

Rudoler & DeRosa LLC
Attn: Docket Clerk
2 Bala Plaza, Suite 300
Bala Cynwyd, PA 19004

In re application of William F. Frame Application No. 12/115,132 Filed: May 5, 2008 For: CASTER WITH WEIGHT TRANSFERRING TAB	: : : : : :	**DECISION ON PETITION TO MAKE SPECIAL FOR NEW APPLICATION UNDER 37 CFR 1.102**

This is a decision on the petition filed on May 5, 2008 to make the above-identified application special for accelerated examination procedure under 37 C.F.R. § 1.102(d).

The petition to make the application special is **DISMISSED.**

REGULATION AND PRACTICE

A grantable petition to make special under 37 C.F.R. § 1.102(d) and pursuant to the "Change to Practice for Petitions in Patent Applications to Make Special and for Accelerated Examination" published in the Federal Register on June 26, 2006 (71 Fed. Reg. 36323), must satisfy the following conditions:

I. Conditions Regarding the Application:

1. the application must be a non-reissue utility or design application filed under 37 CFR 1.111(a);

2. the application, the petition and the required fees must be filed electronically using the USPTO's electronic filing system (EFS), or EFS-web; if not filed electronically, a statement asserting that EFS and EFS-web were not available during the normal business hours;

3. at the time of filing, the application must be complete under 37 CFR 1.51 and in condition for examination;

4. the application must contain three or fewer independent claims and twenty or fewer total claims and the claims must be directed to a single invention.

II. Conditions Regarding the Petition:

The petition must:

1. be filed with the application;

2. include a statement that applicant agrees not to separately argue the patentability of any independent claim during any appeal in the application;

3. include a statement that applicant agrees to make an election without traverse in a telephone interview;

4. include a statement that applicant agrees to conduct such an interview when requested by the examiner;

5. include a statement, made based on a good faith belief, that a preexamination search in compliance with the following requirements, was conducted, including an identification of the field of search by United States class and subclass, where applicable, and for database searches, the search logic or chemical structure or sequence used as a query, the name of the file(s) searched and the database service, and the date of the search.

The preexamination search must:

5.1 involve U.S. patents and patent application publications, foreign patent documents, and non-patent literature, unless the applicant can justify with reasonable certainty that no references more pertinent than those already identified are likely to be found in the eliminated sources and includes such a justification with this statement;

5.2. be directed to the claimed invention and encompass all of the features of the claims, giving the claims the broadest reasonable expectation;

5.3. encompass the disclosed features that may be claimed.

6. must provide in support of the petition an accelerated examination support document.

An accelerated examination support document must include:

6.1. an information disclosure statement (IDS) in compliance with 37 CFR 1.98 citing each reference deemed most closely related to the subject matter of each of the claims;

6.2. an identification of all the limitations in the claims that are disclosed by the reference specifying where the limitation is disclosed in the cited reference;

6.3. a detailed explanation of how each of the claims are patentable over the references cited with particularity required by 37 CFR 1.111(b) and (c);

6.4. a concise statement of the utility of the invention as defined in each of the independent claims (unless the application is a design application);

6.5. a showing of where each limitation of the claims finds support under 35 USC 112, first paragraph, in the written description of the specification. If applicable, the showing must also identify: (1) each means- (or step) plus-function claim element that invokes consideration under 35 UDC 112, sixth paragraph; and (2) the structure, material, or acts in the specification that corresponds to each means- (or step) plus-

function claim element that invokes consideration under 35 UDC 112, sixth paragraph; if the application claims the benefit of one or more applications under title 35, United States Code, the showing must also include where each limitation of the claims finds support under 35 USC 112, first paragraph, in each such application in which such supports exists;

6.6. an identification of any cited references that may be disqualified under 35 USC 103(c).

REVIEW OF FACTS

The petition fails to comply with conditions II.5.1, II.6.2 and II.6.5 above.

As to condition II.5.1, the petition lacks an indication of a preexamination search that includes a search of foreign databases. Normally, this requires at a minimum, a search of the JPO, EPO and WIPO databases. Additionally there appears to have been no Non-Patent Literature (NPL) search outlined in the Search Document. An NPL search is required as well. The USPTO website has search templates that are broken down by class and subclass classification and provides a listing of the websites to be searched when dealing with claimed subject matter in those classifications at: http://www.uspto.gov/web/patents/searchtemplates/searchtemplates.htm.

As to conditions II.6.2, the methodology employed by the applicant in identifying all the claim limitations present in the references is acceptable. The applicant has cited twenty-four references in the information disclosure statement (IDS). However, only a single reference has been analyzed. Since applicant did not file two separate IDS, all references cited in the IDS must be so analyzed as they are provided in support of the petition.

In order to provide an adequate search applicant is required to submit an accelerated examination support document (AESD) that includes an IDS in compliance with 37 CFR 1.98 citing each reference deemed most closely related to the subject matter of each of the claims (whether in independent or dependent form). Specifically:

(1) Applicant **is not** required to cite the references that are only relevant to the general subject matter of the claims because there are references that are more closely related to the subject matter of the claims. Applicant is also not required to cite a reference that is cumulative to any other reference cited in the IDS.

(2) Applicant **is** required to cite any reference that establishes, by itself or in combination with other information, a prima facie case of unpatentability of a claim (see 37 CFR 1.56(b)) in the IDS of the AESD.

(3) Applicant **is** required to cite the reference that discloses the most limitations in the independent claim.

(4) Applicant **is** required to cite any reference that discloses a limitation of an independent claim that is not shown in the other references.

(5) Applicant **is** required to cite any reference that discloses a limitation of a dependent claim that is not shown in the other references.

As to condition to II.6.5, the showing of where each limitation of each of the claims finds support under 35 USC 112 in the written description of the application is insufficient. For each claimed limitation (including dependent claims) the petition needs to identify **specific passages**, or at least a single paragraph **where each limitation provides support**. Listing broadly a figure or pages of the specification for each claim limitation does not comply with what is required. Similar support for the claimed invention must additionally be shown in the provisional application upon which priority is claimed under 35 USC 119. Specifically, for provisional application 60/916,360, a listing of where the limitations of the claims find support is necessary.

Therefore, the petition fails to meet the required conditions to be accorded special status under the accelerated examination procedure.

DECISION

For the above-stated reasons, the petition is **DISMISSED**. The application will therefore be taken up by the examiner for action in its regular turn.

Petitioner is given a single opportunity to perfect the petition. Any request for reconsideration of this decision must be submitted within 1 (one) month or 30 (thirty) days, whichever is longer, (no extension of time under 37 CFR 1.136(a)) from the date of this decision in order to be considered timely. Any request for reconsideration must address the deficiencies indicated above.

Petitioner is reminded that, upon granting of the special status of the application on request for reconsideration, the application will be processed expeditiously. However, due to the dismissal of the instant petition, examination may not be completed within twelve months of the filing date of the application.

Any inquiry regarding this decision should be directed to Teri P. Luu, Quality Assurance Specialist, at (571) 272-7045.

Teri P. Luu
Quality Assurance Specialist
Technology Center 3600

TL/tl: 05/20/08

UNITED STATES PATENT AND TRADEMARK OFFICE

UNITED STATES DEPARTMENT OF COMMERCE
United States Patent and Trademark Office
Address: COMMISSIONER FOR PATENTS
P.O. Box 1450
Alexandria, Virginia 22313-1450
www.uspto.gov

APPLICATION NO.	FILING DATE	FIRST NAMED INVENTOR	ATTORNEY DOCKET NO.	CONFIRMATION NO.
12/115,132	05/05/2008	William F. Frame	JAC01-07	4520

40947 7590 08/18/2008
rudoler & derosa llc
ATTN: DOCKET CLERK
2 BALA PLAZA,
SUITE 300
BALA CYNWYD, PA 19004

EXAMINER
BATSON, VICTOR D

ART UNIT	PAPER NUMBER
3677	

MAIL DATE	DELIVERY MODE
08/18/2008	PAPER

Please find below and/or attached an Office communication concerning this application or proceeding.

The time period for reply, if any, is set in the attached communication.

UNITED STATES PATENT AND TRADEMARK OFFICE

Commissioner for Patents
United States Patent and Trademark Office
P.O. Box 1450
Alexandria, VA 22313-1450
www.uspto.gov

MAILED FROM
DIRECTORS OFFICE

AUG 1 8 2008

TECHNOLOGY CENTER 2800

Rudoler & DeRosa LLC
Attn: Docket Clerk
2 Bala Plaza, Suite 300
Bala Cynwyd, PA 19004

In re application of William F. Frame Application No. 12/115,132 Filed: May 5, 2008 For: CASTER WITH WEIGHT TRANSFERRING TAB	: : : : : :	**DECISION ON PETITION TO MAKE SPECIAL FOR NEW APPLICATION UNDER 37 CFR 1.102**

This is a decision on the renewed petition filed on June 30, 2008 to make the above-identified application special for accelerated examination procedure under 37 C.F.R. § 1.102(d).

The petition to make the application special is **GRANTED**.

The application is eligible for accelerated examination and the petition complies with the conditions for granting the application special status pursuant to the "Change to Practice for Petitions in Patent Applications to Make Special and for Accelerated Examination" published June 26, 2006, in the Federal Register. (71 Fed. Reg. 36323).

The prosecution of the instant application will be conducted expeditiously according to the following guidelines.

1. The application will be docketed to an examiner and taken up for action within two weeks of the date of this decision.

2. Restriction Practice:
   If the examiner determines that the claims are not directed to a single invention, a telephone request to elect one single invention will be made pursuant to MPEP 812.01. As a prerequisite to the grant of this petition, the applicant has agreed to make an oral election, by telephone, without traverse. If the applicant refuses to make an election without traverse, or the examiner cannot reach the applicant after a reasonable effort, the examiner will treat the first claimed invention (invention defined by claim 1) as having being constructively elected without traverse for examination.

3. Office action:
If it is determined that, after appropriate consultation, there is a potential rejection or any other issue to be addressed, the examiner will telephone the applicant and arrange an interview to discuss and resolve the issue. An Office action, other than a Notice of Allowance and Fee(s) Due (Notice of Allowance), will not be issued unless either: 1) an interview was conducted but did not result in agreed to action that places the application in condition for allowance, or, 2) a determination is made that an interview would be unlikely to result in the application being placed in condition for allowance, and 3) an internal conference has been held to review any rejection of any claim.

4. Time for Reply:
An Office action other than a Notice of Allowance or a final Office action will set a shortened statutory period of one month or thirty days, whichever is longer, for reply with no extension of time available under 37 CFR 1.136(a). Failure to timely file a reply within this non-extendible period for reply will result in the abandonment of the application.

5. Reply by Applicant:
A timely reply to an Office action other than the Notice of Allowance must be submitted electronically via EFS or EFS-web and limited to addressing the rejections, objections and requirement made. Any amendment that attempts to: 1) add claims which would result in more than three pending independent claims or more than twenty pending total claims; 2) present claims not encompassed by the pre-examination search or an updated accelerated examination support document; or 3) present claims that are directed to a non-elected invention or an invention other than that previously claimed and examined in the application, will be treated as not fully responsive and will not be entered.

   For any amendment to the claims (including any new claim) that is not encompassed by the accelerated examination support document, applicant must provide an updated accelerated examination support document that encompasses the amended or new claims at the time of filing of the amendment.

   To proceed expeditiously with the examination, it is recommended that a reply with amendments made to any claim or with any new claim being added be accompanied by an updated accelerated examination support document or a statement explaining how the amended or new claim is supported by the original accelerated examination support document.

6. Information Disclosure Statement (IDS):
Any IDS filed during prosecution must be submitted electronically via EFS or EFS-web, accompanied by an updated accelerated examination support document, and be in compliance with 37 CFR 1.97 and 1.98.

7. Post-Allowance Processing:
To expedite processing of the allowed application into a patent, the applicant must: 1) pay the required fees within one month of the date of the Notice of Allowance, and 2) not file any post allowance papers not required by the Office. In no event may the issue fee be paid and accepted later than three months from the date of the Notice of Allowance.

8. After-Final and Appeal Procedures:
To expedite prosecution, after receiving the final Office action, applicant must: 1) promptly file a notice of appeal, an appeal brief and appeal fees; and 2) not request a pre-appeal brief conference.

   Any amendment, affidavit or other evidence filed after final Office action must comply with applicable rules and the requirements outlined in numbered paragraphs 5 and 6 above.

   On appeal, the application will proceed according to normal appeal procedures. After appeal, the application will again be treated special.

9. Proceedings Outside the Normal Examination Process:
If the application becomes involved in a proceeding that is outside the normal examination process (e.g., a secrecy order, national security review, interference proceeding, petitions under 37 CFR 1.181, 182 or 183), the application will be treated special before and after such proceeding.

10. Final Disposition:
The twelve month goal of this accelerated examination procedure ends with a final disposition. The mailing of a final Office action, a Notice of Allowance, the filing of a Notice of Appeal, or the filing of a Request for Continued Examination (RCE) is the final disposition.

If, during prosecution, a paper is not filed electronically using EFS-web, a reply is filed but is not fully responsive, the application is involved in an appeal, or a proceeding outside normal examination process, the application will still be examined expeditiously, however, the final disposition may occur more than twelve months from the filing of the application.

Any inquiry regarding this decision should be directed to Quality Assurance Specialist Teri P. Luu, at (571) 272-7045.

Teri P. Luu
Quality Assurance Specialist
Technology Center 3600

TL/tl: 08/13/08

UNITED STATES PATENT AND TRADEMARK OFFICE

UNITED STATES DEPARTMENT OF COMMERCE
United States Patent and Trademark Office
Address: COMMISSIONER FOR PATENTS
P.O. Box 1450
Alexandria, Virginia 22313-1450
www.uspto.gov

HAYES SOLOWAY P.C.
3450 E. SUNRISE DRIVE, SUITE 140
TUCSON, AZ 85718

Mail Date: 04/20/2010

Applicant	: Chih-Haur Huang	: DECISION ON REQUEST FOR
Patent Number	: 7629839	: RECALCULATION of PATENT
Issue Date	: 12/08/2009	: TERM ADJUSTMENT IN VIEW
Appliction No	: 12/115,157	: OF WYETH AND NOTICE OF INTENT TO
Filed	: 05/05/2008	: ISSUE CERTIFICATE OF CORRECTION
		:

The Request for Recalculation is **GRANTED** to the extent indicated.

The patent term adjustment has been determined to be **0** days. The USPTO will *sua sponte* issue a certificate of correction reflecting the amount of PTA days determined by the recalculation.

Prior to the issuance of the certificate of correction, the USPTO will afford patentee an opportunity to be heard and request reconsideration. Accordingly, patentee has **one month or thirty (30) days**, whichever is longer, to file a request for reconsideration of this patent term adjustment calculation. See 35 U.S.C. 154(b)(3)(B)(ii) and 37 CFR 1.322(a)(4). No extensions of time will be granted under 37 CFR 1.136.

Patentee should use document code PET.OP if electronically filing a request for reconsideration of this patent term adjustment calculation. The patentee must also include the information required by 37 CFR 1.705(b)(2) and the fee required by 37 CFR 1.18(e). If patentee does not file a timely request for reconsideration of this patent term adjustment calculation including the information required by 37 CFR 1.705(b)(2) and the fee required by 37 CFR 1.18(e), the USPTO will issue a certificate of correction reflecting the PTA determination noted above.

Patentee should be aware that in order to preserve the right to review in the United States District Court for the District of Columbia of the USPTO patent term adjustment determination, patentee must ensure that he or she also take the steps required under 35 U.S.C. 154(b)(4)(A) in a timely manner. Nothing in the request for recalculation should be construed as providing an alternative time frame for commencing a civil action under 35 U.S.C. 154(b)(4)(A).

Any questions concerning this decision should be directed to the Office of Patent Legal Administration at 571-272-7702.

UNITED STATES PATENT AND TRADEMARK OFFICE

Commissioner for Patents
United States Patent and Trademark Office
P.O. Box 1450
Alexandria, VA 22313-1450
www.uspto.gov

MICHAEL BEST & FRIEDRICH LLP
100 E WISCONSIN AVENUE
Suite 3300
MILWAUKEE WI 53202

COPY MAILED
JUL 18 2008

In re Application of :
Young, et al. :
Application No. 12/115,161 : ON PETITION
Filed: May 5, 2008 :
Attorney Docket No. 091393-9279-00

This is a decision on the petition filed June 11, 2008, under 37 CFR 1.182 to change the name of the first joint inventor cited on this application in USPTO records.

The petition is **granted**.

The name of the first joint inventor for the above-cited application is changed to "Randi Jane Young."

A corrected filing receipt is enclosed.

The application file is being directed to the Office Patent Application Processing for further reveiw.

Telephone inquiries concerning this matter may be directed to the undersigned at (571) 272-3222.

Kenya A. McLaughlin
Petitions Attorney
Office of Petitions

Enclosure: Corrected Filing Receipt

UNITED STATES PATENT AND TRADEMARK OFFICE

UNITED STATES DEPARTMENT OF COMMERCE
United States Patent and Trademark Office
Address: COMMISSIONER FOR PATENTS
P.O. Box 1450
Alexandria, Virginia 22313-1450
www.uspto.gov

APPLICATION NUMBER	FILING or 371(c) DATE	GRP ART UNIT	FIL FEE REC'D	ATTY.DOCKET.NO	TOT CLAIMS	IND CLAIMS
12/115,161	05/05/2008	3721	1030	091393-9279-00	19	3

CONFIRMATION NO. 4569

CORRECTED FILING RECEIPT

23409
MICHAEL BEST & FRIEDRICH LLP
100 E WISCONSIN AVENUE
Suite 3300
MILWAUKEE, WI 53202

OC000000031006256

Date Mailed: 07/16/2008

Receipt is acknowledged of this non-provisional patent application. The application will be taken up for examination in due course. Applicant will be notified as to the results of the examination. Any correspondence concerning the application must include the following identification information: the U.S. APPLICATION NUMBER, FILING DATE, NAME OF APPLICANT, and TITLE OF INVENTION. Fees transmitted by check or draft are subject to collection. Please verify the accuracy of the data presented on this receipt. **If an error is noted on this Filing Receipt, please submit a written request for a Filing Receipt Correction. Please provide a copy of this Filing Receipt with the changes noted thereon. If you received a "Notice to File Missing Parts" for this application, please submit any corrections to this Filing Receipt with your reply to the Notice. When the USPTO processes the reply to the Notice, the USPTO will generate another Filing Receipt incorporating the requested corrections**

Applicant(s)

Randi Jane Young, Randolph, NJ;
Nathanael S. Murphy, Hellertown, PA;

Assignment For Published Patent Application

INGERSOLL-RAND COMPANY, Montvale, NJ

Power of Attorney: The patent practitioners associated with Customer Number 023409

Domestic Priority data as claimed by applicant

Foreign Applications

Permission to Access - A proper **Authorization to Permit Access to Application by Participating Offices** (PTO/SB/39 or its equivalent) has been received by the USPTO.

If Required, Foreign Filing License Granted: 05/15/2008

The country code and number of your priority application, to be used for filing abroad under the Paris Convention, is **US 12/115,161**

Projected Publication Date: 11/05/2009

Non-Publication Request: No

Early Publication Request: No

Title

ANGLE HEAD AND BEVEL GEAR FOR TOOL

Preliminary Class

173

PROTECTING YOUR INVENTION OUTSIDE THE UNITED STATES

Since the rights granted by a U.S. patent extend only throughout the territory of the United States and have no effect in a foreign country, an inventor who wishes patent protection in another country must apply for a patent in a specific country or in regional patent offices. Applicants may wish to consider the filing of an international application under the Patent Cooperation Treaty (PCT). An international (PCT) application generally has the same effect as a regular national patent application in each PCT-member country. The PCT process **simplifies** the filing of patent applications on the same invention in member countries, but **does not result** in a grant of "an international patent" and does not eliminate the need of applicants to file additional documents and fees in countries where patent protection is desired.

Almost every country has its own patent law, and a person desiring a patent in a particular country must make an application for patent in that country in accordance with its particular laws. Since the laws of many countries differ in various respects from the patent law of the United States, applicants are advised to seek guidance from specific foreign countries to ensure that patent rights are not lost prematurely.

Applicants also are advised that in the case of inventions made in the United States, the Director of the USPTO must issue a license before applicants can apply for a patent in a foreign country. The filing of a U.S. patent application serves as a request for a foreign filing license. The application's filing receipt contains further information and guidance as to the status of applicant's license for foreign filing.

Applicants may wish to consult the USPTO booklet, "General Information Concerning Patents" (specifically, the section entitled "Treaties and Foreign Patents") for more information on timeframes and deadlines for filing foreign patent applications. The guide is available either by contacting the USPTO Contact Center at 800-786-9199, or it can be viewed on the USPTO website at http://www.uspto.gov/web/offices/pac/doc/general/index.html.

For information on preventing theft of your intellectual property (patents, trademarks and copyrights), you may wish to consult the U.S. Government website, http://www.stopfakes.gov. Part of a Department of Commerce initiative, this website includes self-help "toolkits" giving innovators guidance on how to protect intellectual property in specific countries such as China, Korea and Mexico. For questions regarding patent enforcement issues, applicants may call the U.S. Government hotline at 1-866-999-HALT (1-866-999-4158).

LICENSE FOR FOREIGN FILING UNDER

Title 35, United States Code, Section 184

Title 37, Code of Federal Regulations, 5.11 & 5.15

GRANTED

The applicant has been granted a license under 35 U.S.C. 184, if the phrase "IF REQUIRED, FOREIGN FILING LICENSE GRANTED" followed by a date appears on this form. Such licenses are issued in all applications where the conditions for issuance of a license have been met, regardless of whether or not a license may be required as

set forth in 37 CFR 5.15. The scope and limitations of this license are set forth in 37 CFR 5.15(a) unless an earlier license has been issued under 37 CFR 5.15(b). The license is subject to revocation upon written notification. The date indicated is the effective date of the license, unless an earlier license of similar scope has been granted under 37 CFR 5.13 or 5.14.

This license is to be retained by the licensee and may be used at any time on or after the effective date thereof unless it is revoked. This license is automatically transferred to any related applications(s) filed under 37 CFR 1.53(d). This license is not retroactive.

The grant of a license does not in any way lessen the responsibility of a licensee for the security of the subject matter as imposed by any Government contract or the provisions of existing laws relating to espionage and the national security or the export of technical data. Licensees should apprise themselves of current regulations especially with respect to certain countries, of other agencies, particularly the Office of Defense Trade Controls, Department of State (with respect to Arms, Munitions and Implements of War (22 CFR 121-128)); the Bureau of Industry and Security, Department of Commerce (15 CFR parts 730-774); the Office of Foreign AssetsControl, Department of Treasury (31 CFR Parts 500+) and the Department of Energy.

NOT GRANTED

No license under 35 U.S.C. 184 has been granted at this time, if the phrase "IF REQUIRED, FOREIGN FILING LICENSE GRANTED" DOES NOT appear on this form. Applicant may still petition for a license under 37 CFR 5.12, if a license is desired before the expiration of 6 months from the filing date of the application. If 6 months has lapsed from the filing date of this application and the licensee has not received any indication of a secrecy order under 35 U.S.C. 181, the licensee may foreign file the application pursuant to 37 CFR 5.15(b).

UNITED STATES PATENT AND TRADEMARK OFFICE

Commissioner for Patents
United States Patent and Trademark Office
P.O. Box 1450
Alexandria, VA 22313-1450
www.uspto.gov

COPY MAILED

JUL 2 1 2008

MICHAEL BEST & FRIEDRICH LLP
100 E WISCONSIN AVENUE
Suite 3300
MILWAUKEE WI 53202

In re Application of	:	
Young, et al.	:	
Application No. 12/115,172	:	ON PETITION
Filed: May 5, 2008	:	
Attorney Docket No. 091393-9280-00		

This is a decision on the petition under 37 CFR 1.182 to change the name of the first joint inventor cited on this application in USPTO records.

The petition is **granted**.

The name of the first joint inventor for the above-cited application is changed to "Randi Jane Young."

A corrected filing receipt is enclosed.

The application file is being directed to technology Center 3700, GAU 3721 for further processing.

Telephone inquiries concerning this matter may be directed to the undersigned at (571) 272-3222.

Kenya A. McLaughlin
Petitions Attorney
Office of Petitions

Enclosure: Corrected Filing Receipt

UNITED STATES PATENT AND TRADEMARK OFFICE

UNITED STATES DEPARTMENT OF COMMERCE
United States Patent and Trademark Office
Address: COMMISSIONER FOR PATENTS
P.O. Box 1450
Alexandria, Virginia 22313-1450
www.uspto.gov

APPLICATION NUMBER	FILING or 371(c) DATE	GRP ART UNIT	FIL FEE REC'D	ATTY.DOCKET.NO	TOT CLAIMS	IND CLAIMS
12/115,172	05/05/2008	3721	1490	091393-9280-00	25	4

CONFIRMATION NO. 4596

CORRECTED FILING RECEIPT

23409
MICHAEL BEST & FRIEDRICH LLP
100 E WISCONSIN AVENUE
Suite 3300
MILWAUKEE, WI 53202

OC000000031006028

Date Mailed: 07/16/2008

Receipt is acknowledged of this non-provisional patent application. The application will be taken up for examination in due course. Applicant will be notified as to the results of the examination. Any correspondence concerning the application must include the following identification information: the U.S. APPLICATION NUMBER, FILING DATE, NAME OF APPLICANT, and TITLE OF INVENTION. Fees transmitted by check or draft are subject to collection. Please verify the accuracy of the data presented on this receipt. **If an error is noted on this Filing Receipt, please submit a written request for a Filing Receipt Correction. Please provide a copy of this Filing Receipt with the changes noted thereon. If you received a "Notice to File Missing Parts" for this application, please submit any corrections to this Filing Receipt with your reply to the Notice. When the USPTO processes the reply to the Notice, the USPTO will generate another Filing Receipt incorporating the requested corrections**

Applicant(s)

Randi Jane Young, Randolph, NJ;
Nathanael S. Murphy, Hellertown, PA;

Assignment For Published Patent Application

INGERSOLL-RAND COMPANY, Montvale, NJ

Power of Attorney: The patent practitioners associated with Customer Number 023409

Domestic Priority data as claimed by applicant

Foreign Applications

Permission to Access - A proper **Authorization to Permit Access to Application by Participating Offices** (PTO/SB/39 or its equivalent) has been received by the USPTO.

If Required, Foreign Filing License Granted: 05/15/2008

The country code and number of your priority application, to be used for filing abroad under the Paris Convention, is **US 12/115,172**

Projected Publication Date: 11/05/2009

Non-Publication Request: No

Early Publication Request: No

Title

MOTOR ASSEMBLY FOR PNEUMATIC TOOL

Preliminary Class

173

PROTECTING YOUR INVENTION OUTSIDE THE UNITED STATES

Since the rights granted by a U.S. patent extend only throughout the territory of the United States and have no effect in a foreign country, an inventor who wishes patent protection in another country must apply for a patent in a specific country or in regional patent offices. Applicants may wish to consider the filing of an international application under the Patent Cooperation Treaty (PCT). An international (PCT) application generally has the same effect as a regular national patent application in each PCT-member country. The PCT process **simplifies** the filing of patent applications on the same invention in member countries, but **does not result** in a grant of "an international patent" and does not eliminate the need of applicants to file additional documents and fees in countries where patent protection is desired.

Almost every country has its own patent law, and a person desiring a patent in a particular country must make an application for patent in that country in accordance with its particular laws. Since the laws of many countries differ in various respects from the patent law of the United States, applicants are advised to seek guidance from specific foreign countries to ensure that patent rights are not lost prematurely.

Applicants also are advised that in the case of inventions made in the United States, the Director of the USPTO must issue a license before applicants can apply for a patent in a foreign country. The filing of a U.S. patent application serves as a request for a foreign filing license. The application's filing receipt contains further information and guidance as to the status of applicant's license for foreign filing.

Applicants may wish to consult the USPTO booklet, "General Information Concerning Patents" (specifically, the section entitled "Treaties and Foreign Patents") for more information on timeframes and deadlines for filing foreign patent applications. The guide is available either by contacting the USPTO Contact Center at 800-786-9199, or it can be viewed on the USPTO website at http://www.uspto.gov/web/offices/pac/doc/general/index.html.

For information on preventing theft of your intellectual property (patents, trademarks and copyrights), you may wish to consult the U.S. Government website, http://www.stopfakes.gov. Part of a Department of Commerce initiative, this website includes self-help "toolkits" giving innovators guidance on how to protect intellectual property in specific countries such as China, Korea and Mexico. For questions regarding patent enforcement issues, applicants may call the U.S. Government hotline at 1-866-999-HALT (1-866-999-4158).

LICENSE FOR FOREIGN FILING UNDER

Title 35, United States Code, Section 184

Title 37, Code of Federal Regulations, 5.11 & 5.15

GRANTED

The applicant has been granted a license under 35 U.S.C. 184, if the phrase "IF REQUIRED, FOREIGN FILING LICENSE GRANTED" followed by a date appears on this form. Such licenses are issued in all applications where the conditions for issuance of a license have been met, regardless of whether or not a license may be required as

set forth in 37 CFR 5.15. The scope and limitations of this license are set forth in 37 CFR 5.15(a) unless an earlier license has been issued under 37 CFR 5.15(b). The license is subject to revocation upon written notification. The date indicated is the effective date of the license, unless an earlier license of similar scope has been granted under 37 CFR 5.13 or 5.14.

This license is to be retained by the licensee and may be used at any time on or after the effective date thereof unless it is revoked. This license is automatically transferred to any related applications(s) filed under 37 CFR 1.53(d). This license is not retroactive.

The grant of a license does not in any way lessen the responsibility of a licensee for the security of the subject matter as imposed by any Government contract or the provisions of existing laws relating to espionage and the national security or the export of technical data. Licensees should apprise themselves of current regulations especially with respect to certain countries, of other agencies, particularly the Office of Defense Trade Controls, Department of State (with respect to Arms, Munitions and Implements of War (22 CFR 121-128)); the Bureau of Industry and Security, Department of Commerce (15 CFR parts 730-774); the Office of Foreign AssetsControl, Department of Treasury (31 CFR Parts 500+) and the Department of Energy.

NOT GRANTED

No license under 35 U.S.C. 184 has been granted at this time, if the phrase "IF REQUIRED, FOREIGN FILING LICENSE GRANTED" DOES NOT appear on this form. Applicant may still petition for a license under 37 CFR 5.12, if a license is desired before the expiration of 6 months from the filing date of the application. If 6 months has lapsed from the filing date of this application and the licensee has not received any indication of a secrecy order under 35 U.S.C. 181, the licensee may foreign file the application pursuant to 37 CFR 5.15(b).

UNITED STATES PATENT AND TRADEMARK OFFICE

Commissioner for Patents
United States Patent and Trademark Office
P.O. Box 1450
Alexandria, VA 22313-1450
www.uspto.gov

TOWNSEND AND TOWNSEND AND CREW LLP
TWO EMBARCADERO CENTER
EIGHTH FLOOR
SAN FRANCISCO, CA 94111-3834

MAILED

FEB 16 2010

OFFICE OF PETITIONS

In re Application of Robert R. Lube Application No. 12/115,189 Filed: May 5, 2008 Attorney Docket No. **2704/48855/2**	DECISION ON PETITION TO WITHDRAW FROM RECORD

This is a decision on the Request to Withdraw as attorney or agent of record under 37 CFR. § 1.36(b), filed December 18, 2009.

The request is **NOT APPROVED** as moot.

A review of the file record indicates that the power of attorney to attorneys/agents associated with Customer Number 20350 has been revoked by the applicants of the patent application on January 22, 2010. Accordingly, the request to withdraw under 37 CFR § 1.36(b) is moot.

All future communications from the Office will continue to be directed to the below-listed address until otherwise notified by applicant.

Telephone inquires concerning this decision should be directed to the undersigned at 571-272-4584.

JoAnne Burke
Petitions Examiner
Office of Petitions

cc: TREXLER, BUSHNELL, GIANGIORGI,
BLACKSTONE & MARR, LTD.
105 WEST ADAMS STREET
SUITE 3600
CHICAGO IL 60603

UNITED STATES PATENT AND TRADEMARK OFFICE

Commissioner for Patents
United States Patent and Trademark Office
P.O. Box 1450
Alexandria, VA 22313-1450
www.uspto.gov

DEMONT & BREYER, LLC
100 COMMONS WAY, STE 250
HOLMDEL NJ 07733

COPY MAILED
DEC 2 4 2008
OFFICE OF PETITIONS

In re Application of	:	
Sachin Garg et al.	:	DECISION GRANTING STATUS
Application No. 12/115,196	:	UNDER 37 CFR 1.47(a)
Filed: May 5, 2008	:	
Attorney Docket No. 630-203US	:	

This is in response to the petition under 37 CFR 1.47(a), filed November 21, 2008.

The petition is **GRANTED.**

Petitioner has shown that the non-signing inventor constructively refused to join in the filing of the above-identified application after having been presented with a copy of the application papers.

The application and papers have been reviewed and found in compliance with 37 CFR 1.47(a). This application is hereby accorded Rule 1.47(a) status.

As provided in 37 CFR 1.47(c), this Office will forward notice of this application's filing to the non-signing inventor at the address given in the petition. Notice of the filing of this application will also be published in the Official Gazette.

This application is being referred to the Office of Patent Application Processing for pre-examination processing.

Telephone inquiries regarding this decision should be directed to Carl Friedman at (571) 272-6842.

Anthony Knight
Supervisor
Office of Petitions

UNITED STATES PATENT AND TRADEMARK OFFICE

Commissioner for Patents
United States Patent and Trademark Office
P.O. Box 1450
Alexandria, VA 22313-1450
www.uspto.gov

Avaya
DEMONT & BREYER, LLC
100 COMMONS WAY, STE 250
HOLMDEL NJ 07733

MAILED

OCT 20 2009

OFFICE OF PETITIONS

In re Application of:	:	
Garg et al.	:	
Application No. 12/115199	:	DECISION GRANTING
Filing or 371(c) Date: 05/05/2008	:	PETITION UNDER
Title of Invention:	:	37 CFR 1.47(a)
MULTI-NODE AND MULTI-CALL	:	
STATE MACHINE PROFILING	:	
FOR DETECTING SPIT	:	

This Decision is in response to the Petition Under 37 CFR 1.47, filed November 21, 2008, to allow the other inventor(s) to proceed with the application on behalf of himself or herself and the nonsigning inventor(s). The petition is properly treated under 37 CFR § 1.47(a).

The petition is **granted**.

The above-identified application and papers have been reviewed and found in compliance with 37 CFR 1.47(a). This application is hereby accorded Rule 1.47(a) status.

Petitioner has shown that the non-signing inventor, Akshay Adhikari, refuses to join in the application.

As provided in Rule 1.47(a), this Office will forward notice of this application's filing to the non-signing inventor at the addresses given in the Petition. Notice of the filing of this application will also be published in the Official Gazette.

The application file is being referred to the Office of Initial Patent Examination for continued processing.

Telephone inquiries related to this decision may be directed to the undersigned at (571) 272-3232.

/Derek L. Woods/
Derek L. Woods
Attorney
Office of Petitions

UNITED STATES PATENT AND TRADEMARK OFFICE

Commissioner for Patents
United States Patent and Trademark Office
P.O. Box 1450
Alexandria, VA 22313-1450
www.uspto.gov

MR. AKSHAY ADHIKARI
3480 GRANADA AVE., APT. 140
SANTA CLARA, CA 95051

MAILED

OCT 20 2009

OFFICE OF PETITIONS

In re Application of:	:	
Garg et al.	:	
Application No. 12/115199	:	LETTER
Filing or 371(c) Date: 05/05/2008	:	
Title of Invention:	:	
MULTI-NODE AND MULTI-CALL	:	
STATE MACHINE PROFILING	:	
FOR DETECTING SPIT	:	

Dear Mr. Adhikari:

You are named as a joint inventor in the above-identified United States patent application filed under the provisions of 35 U.S.C. 116 (United States Code) and 37 CFR 1.47(a), Rules of Practice in Patent Cases. Should a patent be granted on the application you will be designated therein as a joint inventor.

As a named inventor you are entitled to inspect any paper in the file wrapper of the application, order copies of all or any part thereof (at a prepaid cost per 37 CFR 1.19) or make your position of record in the application. Alternatively, you may arrange to do any of the preceding through a registered patent attorney or agent presenting written authorization from you. If you care to join the application, counsel of record (see below) would presumably assist you. Joining in the application would entail the filing of an appropriate oath or declaration by you pursuant to 37 CFR 1.63.

Telephone inquiries regarding this communication should be directed to the undersigned at (571) 272-3232. Requests for information regarding your application should be directed to the File Information Unit at (703) 308-2733. Information regarding how to pay for and order a copy of the application, or a specific paper in the application, should be directed to Certification Division at (703) 308-9726 or 1-800-972-6382 (outside the Washington D.C. area).

/Derek L. Woods/
Derek L. Woods
Attorney
Office of Petitions

CC: Avaya
DEMONT & BREYER, LLC
100 COMMONS WAY, STE 250
HOLMDEL NJ 07733

UNITED STATES PATENT AND TRADEMARK OFFICE

Commissioner for Patents
United States Patent and Trademark Office
P.O. Box 1450
Alexandria, VA 22313-1450
www.uspto.gov

CANTOR COLBURN LLP
IBM Yorktown
20 Church Street, 22nd Floor
Hartford, CT 06103

JUN 23 2008

In re Application of:	:	
Russell P. Bobbitt et al.	:	
Serial No.: 12/115,238	:	DECISION ON PETITION TO
Filed: May 5, 2008	:	MAKE SPECIAL FOR NEW
Docket No.: YOR920070783US1	:	APPLICATION UNDER 37
Title: METHOD FOR DETECTING A NON-SCAN	:	C.F.R. § 1.102 & M.P.E.P. § 708.2
AT A RETAIL CHECKOUT STATION	:	

This is a decision on the petition filed on May 5, 2008 to make the above-identified application special for accelerated examination procedure under 37 C.F.R. §1.102(d).

The petition to make the application special is GRANTED.

The application is eligible for accelerated examination and the petition complies with the conditions for granting the application special status pursuant to the "Change to Practice for Petitions in Patent Applications to Make Special and for Accelerated Examination" published June 26, 2006, in the Federal Register. (71 Fed. Reg. 36323).

The prosecution of the instant application will be conducted expeditiously according to the following guidelines.

1. The application will be docketed to an examiner and taken up for action within two weeks of the date of this decision.

2. Restriction Practice:
   If the examiner determines that the claims are not directed to a single invention, a telephone request to elect one single invention will be made pursuant to MPEP 812.01. As a prerequisite to the grant of this petition, the applicant has agreed to make an oral election, by telephone, without traverse. If the applicant refuses to make an election without traverse, or the examiner cannot reach the applicant after a reasonable effort, the examiner will treat the first claimed invention (invention defined by claim 1) as having being constructively elected without traverse for examination.

3. Office action:
   If it is determined that, after appropriate consultation, there is a potential rejection or any

other issue to be addressed, the examiner will telephone the applicant and arrange an interview to discuss and resolve the issue. An Office action, other than a Notice of Allowance and Fee(s) Due (Notice of Allowance), will not be issued unless either: 1) an interview was conducted but did not result in agreed to action that places the application in condition for allowance, or, 2) a determination is made that an interview would be unlikely to result in the application being placed in condition for allowance, and 3) an internal conference has been held to review any rejection of any claim.

4. Time for Reply:
An Office action other than a Notice of Allowance or a final Office action will set a shortened statutory period of one month or thirty days, whichever is longer, for reply with no extension of time available under 37 C.F.R. §1.136(a). Failure to timely file a reply within this non-extendible period for reply will result in the abandonment of the application.

5. Reply by Applicant:
A timely reply to an Office action other than the Notice of Allowance must be submitted electronically via EFS or EFS-web and limited to addressing the rejections, objections and requirement made. Any amendment that attempts to: 1) add claims which would result in more than three pending independent claims or more than twenty pending total claims; 2) present claims not encompassed by the pre-examination search or an updated accelerated examination support document; or 3) present claims that are directed a non-elected invention or an invention other than that previously claimed and examined in the application, will be treated as not fully responsive and will not be entered.

For any amendment to the claims (including any new claim) that is not encompassed by the accelerated examination support document, applicant must provide an updated accelerated examination support document that encompasses the amended or new claims at the time of filing of the amendment.

To proceed expeditiously with the examination, it is recommended that a reply with amendments made to any claim or with any new claim being added be accompanied by an updated accelerated examination support document or a statement explaining how the amended or new claim is supported by the original accelerated examination support document.

6. Information Disclosure Statement (IDS):
Any IDS filed during prosecution must be submitted electronically via EFS or EFS-web, accompanied by an updated accelerated examination support document, and be in compliance with 37 C.F.R. §1.97 and §1.98. mpliance with 37 C.F.R. §1.97 and §1.98.

7. Post-Allowance Processing:
To expedite processing of the allowed application into a patent, the applicant must: 1) pay the required fees within one month of the date of the Notice of Allowance, and 2) not

file any post allowance papers not required by the Office. In no event may the issue fee be paid and accepted later than three months from the date of the Notice of Allowance.

8. After-Final and Appeal Procedures:
   To expedite prosecution, after receiving the final Office action, applicant must: 1) promptly file a notice of appeal, an appeal brief and appeal fees; and 2) not request a pre-appeal brief conference.

   Any amendment, affidavit or other evidence filed after final Office action must comply with applicable rules and the requirements outlined in numbered paragraphs 5 and 6 above.

   On appeal, the application will proceed according to normal appeal procedures. After appeal, the application will again be treated special.

9. Proceedings Outside the Normal Examination Process:
   If the application becomes involved in a proceeding that is outside the normal examination process (e.g., a secrecy order, national security review, interference proceeding, petitions under 37 C.F.R. §1.181, §1.182 or §1.183), the application will be treated special before and after such proceeding.

10. Final Disposition:
    The twelve-month goal of this accelerated examination procedure ends with a final disposition. The mailing of a final Office action, a Notice of Allowance, the filing of a Notice of Appeal, or the filing of a Request for Continued Examination (RCE) is the final disposition.

If, during prosecution, a paper is not filed electronically using EFS-web, a reply is filed but is not fully responsive, the application is involved in an appeal, or a proceeding outside normal examination process, the application will still be examined expeditiously, however, the final disposition may occur more than twelve months from the filing of the application.

Any inquiry regarding this decision should be directed to the undersigned at (571) 272-1638.

Edward Westin

Edward Westin, Quality Assurance Specialist
Technology Center 2800
Semiconductors, Electrical and Optical
Systems and Components

UNITED STATES PATENT AND TRADEMARK OFFICE

Commissioner for Patents
United States Patent and Trademark Office
P.O. Box 1450
Alexandria, VA 22313-1450
www.uspto.gov

In re Application of :
Armen P. Sarvazyan :

Application No. 12115240 :DECISION ON PETITION TO MAKE SPECIAL
Filed: :UNDER 37 CFR 1.102(c)(1)
:

Attorney Docket No. AL-21

This is a decision on the electronic petition under 37 CFR 1.102 (c)(1) ,filed 05-MAY-2008 to make the above-identified application special based on applicant's age as set forth in MPEP § 708.02, Section IV.

The petition is **GRANTED**.

A grantable petition to make an application special under 37 CFR 1.102(c)(1), MPEP § 708.02, Section IV: Applicant's Age must include a statement by applicant or a registered practitioner having evidence that applicant is at least 65 years of age. No fee is required.

Accordingly, the above-identified application has been accorded “special” status and will be taken up for action by the examiner upon the completion of all pre-examination processing.

Telephone inquires concerning this electronic decision should be directed to the Electronic Business Center at 866-217-9197.

All other inquires concerning either the examination or status of the application should be directed to the Technology Center.

PTO/SB/130 (03-08)
Approved for use through 04/30/2008. OMB 0651- 0031
U.S. Patent and Trademark Office; U.S. DEPARTMENT OF COMMERCE
Under the Paperwork Reduction Act of 1995, no persons are required to respond to a collection of information unless it contains a valid OMB control number

PETITION TO MAKE SPECIAL BASED ON AGE FOR ADVANCEMENT OF EXAMINATION UNDER 37 CFR 1.102(c)(1)

Application Information

Application Number	12115240	Confirmation Number	4716	Filing Date	2008-05-05
Attorney Docket Number (optional)	AL-21	Art Unit		Examiner	
First Named Inventor	Armen P. Sarvazyan				
Title of Invention	FOCUSING OF BROADBAND ACOUSTIC SIGNALS USING TIME-REVERSED ACOUSTICS				

Attention: Office of Petitions

An application may be made special for advancement of examination upon filing of a petition showing that the applicant is 65 years of age, or more. No fee is required with such a petition. See 37 CFR 1.102(c)(1) and MPEP 708.02 (IV).

APPLICANT HEREBY PETITIONS TO MAKE SPECIAL FOR ADVANCEMENT OF EXAMINATION IN THIS APPLICATION UNDER 37 CFR 1.102(c)(1) and MPEP 708.02 (IV) ON THE BASIS OF THE APPLICANT'S AGE.

A grantable petition requires one of the following items:
(1) Statement by one named inventor in the application that he/she is 65 years of age, or more; or
(2) Certification by a registered attorney/agent having evidence such as a birth certificate, passport, driver's license, etc. showing one named inventor in the application is 65 years of age, or more.

Name of Inventor who is 65 years of age, or older

Given Name	Middle Name	Family Name	Suffix
Armen	P.	Sarvazyan	

A signature of the applicant or representative is required in accordance with 37 CFR 1.33 and 10.18.
Please see 37 CFR 1.4(d) for the format of the signature.

Select (1) or (2) :

○ (1) I am an inventor in this application and I am 65 years of age, or more.

◉ (2) I am an attorney or agent registered to practice before the Patent and Trademark Office, and I certify that I am in possession of evidence, and will retain such in the application file record, showing that the inventor listed above is 65 years of age, or more.

Signature	/leschinsky/	Date (YYYY-MM-DD)	2008-05-05
Name	Boris Leschinsky	Registration Number	41404

PTO/SB/130 (03-08)
Approved for use through 04/30/2008. OMB 0651- 0031
U.S. Patent and Trademark Office; U.S. DEPARTMENT OF COMMERCE
Under the Paperwork Reduction Act of 1995, no persons are required to respond to a collection of information unless it contains a valid OMB control number

Privacy Act Statement

The Privacy Act of 1974 (P.L. 93-579) requires that you be given certain information in connection with your submission of the attached form related to a patent application or patent. Accordingly, pursuant to the requirements of the Act, please be advised that: (1) the general authority for the collection of this information is 35 U.S.C. 2(b)(2); (2) furnishing of the information solicited is voluntary; and (3) the principal purpose for which the information is used by the U.S. Patent and Trademark Office is to process and/or examine your submission related to a patent application or patent. If you do not furnish the requested information, the U.S. Patent and Trademark Office may not be able to process and/or examine your submission, which may result in termination of proceedings or abandonment of the application or expiration of the patent.

The information provided by you in this form will be subject to the following routine uses:

1. The information on this form will be treated confidentially to the extent allowed under the Freedom of Information Act (5 U.S.C. 552) and the Privacy Act (5 U.S.C. 552a). Records from this system of records may be disclosed to the Department of Justice to determine whether the Fr eedom of Information Act requires disclosure of these records.

2. A record from this system of records may be disclosed, as a routine use, in the course of presenting evidence to a court, magistrate, or administrative tribunal, including disclosures to opposing counsel in the course of settlement negotiations.

3. A record in this system of records may be disclosed, as a routine use, to a Member of Congress submitting a request involving an individual, to whom the record pertains, when the individual has requested assistance from the Member with respect to the subject matter of the record.

4. A record in this system of records may be disclosed, as a routine use, to a contractor of the Agency having need for the information in order to perform a contract. Recipients of information shall be required to comply with the requirements of the Privacy Act of 1974, as amended, pursuant to 5 U.S.C. 552a(m).

5. A record related to an International Application filed under the Patent Cooperation Treaty in this system of records may be disclosed, as a routine use, to the International Bureau of the World Intellectual Property Organization, pursuant to the Patent Cooperation Treaty.

6. A record in this system of records may be disclosed, as a routine use, to another federal agency for purposes of National Security review (35 U.S.C. 181) and for review pursuant to the Atomic Energy Act (42 U.S.C. 218(c)).

7. A record from this system of records may be disclosed, as a routine use, to the Administrator, General Services, or his/her designee, during an inspection of records conducted by GSA as part of that agency's responsibility to recommend improvements in records management practices and programs, under authority of 44 U.S.C. 2904 and 2906. Such disclosure shall be made in accordance with the GSA regulations governing inspection of records for this purpose, and any other relevant (i.e., GSA or Commerce) directive. Such disclosure shall not be used to make determinations about indivi duals.

8. A record from this system of records may be disclosed, as a routine use, to the public after either publication of the application pursuant to 35 U.S.C. 122(b) or issuance of a patent pursuant to 35 U.S.C. 151. Further, a record may be disclosed, subject to the limitations of 37 CFR 1.14, as a routine use, to the public if the record was filed in an application which became abandoned or in which the proceedings were terminated and which application is referenced by either a published application, an application open to public inspections or an issued patent.

9. A record from this system of records may be disclosed, as a routine use, to a Federal, State, or local law enforcement agency, if the USPTO becomes aware of a violation or potential violation of law or regulation.

UNITED STATES PATENT AND TRADEMARK OFFICE

Commissioner for Patents
United States Patent and Trademark Office
P.O. Box 1450
Alexandria, VA 22313-1450
www.uspto.gov

CST

December 1, 2009

In re application of Manfred Hewel Serial No.12/115,268 Filed: May 5, 2008 For: SEMIAROMATIC POLYAMIDE MOLDING COMPOSITIONS AND AND THEIR USE	:	DECISION ON REQUEST TO PARTICIPATE IN PATENT PROSECUTION HIGHWAY PILOT PROGRAM AND PETITION TO MAKE SPECIAL UNDER 37 CFR 1.102(d)

This is a decision on the request to participate in the Patent Prosecution Highway (PPH) pilot program filed on July 23, 2009.

The request and petition are **DISMISSED** as moot. Specifically, a non-final office action was mailed in this application on October 5, 2009.

A grantable request to participate in the PPH pilot program and petition to make special require:

(1) The U.S. application must validly claim priority under 35 U.S.C. 119(a) to one or more applications filed in the EPO, note where the EPO application with similar claims is not the same application from which the U.S. application claims priority that the applicant must identify the relationship between the EPO application with similar claims and the EPO priority application;

(2) Applicant must submit a copy of:
   a. The allowable/patentable claim(s) from the EPO application(s) or if a copy of the allowable/patentable claims is available via the Dossier Access System (DAS) applicant may request the USPTO to obtain a copy from DAS; however, if the USPTO is unable to obtain a copy from the DAS, the applicant will be required to submit a copy;
   b. An English translation of the allowable/ patentable claim(s), if applicable; and
   c. A statement that the English translation is accurate, if applicable;

(3) Applicant must:
   a. Ensure all the claims in the U.S. application must sufficiently correspond or be amended to sufficiently correspond to the allowable/patentable claim(s) in the EPO application(s); and
   b. Submit a claims correspondence table in English;

(4) Examination of the U.S. application has not begun;

(5) Applicant must submit:
a. Documentation of prior office action:
i. a copy of the office action(s) just prior to the "Decision to Grant a Patent" from each of the EPO application(s) containing the allowable/patentable claims(s) or
ii. if the allowable/patentable claim(s) are from "Notification of Reasons for Refusal" then the Notification of Reasons for Refusal or
iii. if the EPO application is a first action allowance then no office action from the EPO is necessary should be indicated on the request/petition form:
Further, if a copy of the documents from (i) or (ii) is available via the Dossier Access System (DAS), applicant may request the USPO obtain a copy from the DAS; however, if the USPTO is unable to obtain a copy of the DAS, the applicant will be required to submit a copy;
b. An English language translation of the EPO Office action from (5)(a)(i)-(ii) above if applicable; and
c. A statement that the English translation is accurate;

(6) Applicant must submit:
a. An IDS listing the documents cited by the EPO examiner in the EPO office action (unless already submitted in this application)
b. Copies of documents except U.S. patents or U.S. patent application publications (unless already submitted in this application); and

(7) The required petition fee under 37 CFR 1.17(h).

The request to participate in the PPH program and petition fail because:

(4) Examination of the U.S. application has begun. Specifically, note that a non-final office action was mailed on October 5, 2009.

Applicant is given a time period of **ONE MONTH OR THIRTY DAYS**, whichever is longer, from the mailing date of this decision to correct the deficiencies. **NO EXTENSION OF TIME UNDER 37 CFR 1.136 IS PERMITTED.** If the deficiencies are not corrected within the time period given, the application with await action in its regular turn.

Any inquiry regarding this decision should be directed to Christine Tierney, Quality Assurance Specialist, at (571) 272-1055.

All other inquiries concerning the examination or status of the application is accessible in the PAIR system at http://www.uspto.gov/ebc/index.html.

/Christine Tierney/

Christine Tierney
Quality Assurance Specialist
Technology Center 1700

UNITED STATES PATENT AND TRADEMARK OFFICE

Commissioner for Patents
United States Patent and Trademark Office
P.O. Box 1450
Alexandria, VA 22313-1450
www.uspto.gov

AGILENT TECHNOLOGIES INC.
INTELLECTUAL PROPERTY ADMINISTRATION,LEGAL DEPT.
MS BLDG. E P.O. BOX 7599
LOVELAND CO 80537

COPY MAILED

SEP 2 9 2008

OFFICE OF PETITIONS

In re Application of	:	
Frank Van DeSande	:	
Application No. 12/115284	:	
Filing or 371(c) Date: 05/05/2008	:	
Attorney Docket Number:	:	DECISION
31060560-2	:	ON PETITION

This is a decision on the "Petition Under 37 C.F.R. §1.57(a)." filed July 10, 2008, requesting that the application be accorded a filing date of May 5, 2008, based upon a priority claim to foreign application GB 0709847.8, of which the present application claims priority.

The petition is **granted to the extent indicated below**.

Background

Application papers in the above-identified application were deposited on May 5, 2008. However, on May 22, 2008, the Office of Patent Application Processing mailed applicants a "Notice of Incomplete Nonprovisional Application," notifying applicants that the application papers had NOT been accorded a filing date because the application was deposited without drawings. In response, applicants timely filed this petition. Applicants request that the application be amended to include the inadvertently omitted drawings on the basis that the application as filed contained a prior benefit claim under 37 CFR 1.55 or 1.78.

Applicable Law, Rules and MPEP

According a Filing date

A review of the file reveals that the specification contains method claims (i.e. claim 10). As stated in MPEP § 601.01(f), it is the practice of the PTO to treat an application that contains at least one process, method or composition claim as an application for which a drawing is not necessary for an understanding of the invention under 35 U.S.C. 113 (first sentence).

MPEP § 601.01(f) also states that:

> A nonprovisional application having at least one claim, or a provisional application having at least some disclosure, directed to the subject matter discussed above for which a drawing is usually not considered essential for a filing date, describing drawing figure(s) in the specification, but filed without drawings will be treated as an application filed without all of the drawing figures referred to in the specification as discussed in MPEP § 601.01(g), so long as the application contains something that can be construed as a written description.

This application contains method claims; therefore, the application should have been treated as an application filed without all of the drawing figures referred to in the specification as discussed in MPEP § 601.01(g).

In applications filed without all of the drawing figure(s) referred to in the specification, the MPEP § 601.01(g) states that a "Notice of Omitted Item(s)" is mailed indicating that the application has been accorded a filing date, but is lacking some of the figures of drawings described in the specification.

In view of the above, the Notice mailed May 22, 2008, was mailed in error and is hereby withdrawn.

Petition under 37 CFR 1.57(a)

The MPEP 601.01(f) further provides that

> As an alternative to a petition under 37 CFR 1.53(e), if the drawing(s) was inadvertently omitted from an application filed on or after September 21, 2004, and the application contains a claim under 37 CFR 1.55 for priority of a prior-filed foreign application, or a claim under 37 CFR 1.78 for the benefit of a prior-filed provisional, nonprovisional, or international application, that was present on the filing date of the application, and the inadvertently omitted drawing(s) is completely contained in the prior-filed application, the applicant may submit the omitted drawing(s) by way of an amendment in compliance with 37 CFR 1.57(a). The amendment must be by way of a petition under 37 CFR 1.57(a)(3) accompanied by the petition fee set forth in 37 CFR 1.17(f). See MPEP § 201.17. (Emphasis supplied).

Applicant is advised that a petition is not necessary in this instance to add the omitted figures.

37 CFR 1.57(a), incorporation by reference, provides a method whereby an applicant may amend an application to include an inadvertently omitted portion of the specification or drawing(s). However, where a filing date has been accorded an application, a petition is not necessary to add the omitted portion of the specification or drawing(s). "If an application is not otherwise entitled to a filing date under § 1.53(b), the amendment must be by way of a petition pursuant to this

paragraph accompanied by the fee set forth in § 1.17(f)." 37 CFR 1.57(a)(3). (Emphasis supplied). *See, Also*, MPEP 201.17(F).

The Manual of Patent Examining Procedure ("MPEP") also provides that

> ...37 CFR 1.57(a) was added to provide a safeguard for applicants when a page(s) of the specification, or a portion thereof, or a sheet(s) of the drawing(s), or a portion thereof, is inadvertently omitted from an application, such as through a clerical error. 37 CFR 1.57(a) applies to applications filed on or after September 21, 2004. 37 CFR 1.57(a) permits inadvertently omitted material to be added to the application <u>by way of a later filed amendment</u> if the inadvertently omitted portion of the specification or drawing(s) is completely contained in a prior-filed application (for which priority/benefit is claimed) even though there is no explicit incorporation by reference of the prior-filed application. *See* MPEP § 201.17 for discussion regarding 37 CFR 1.57(a). *See* MPEP § 601.01(p). (Emphasis supplied).

MPEP 201.06(c)(IV)(B).

No petition is required. The Amendment to include the inadvertently omitted drawings, filed with the present petition on July 10, 2008, will be considered by the Examiner.

To the extent that the present petition requests a filing date of May 5, 2008, with no drawings present in the application, the petition is **granted**.

In view of the fact that the petition was necessitated by an error on the part of this Office, a refund of the petition fee has been credited to Petitioner's deposit account.

The application file does not indicate a change of address has been filed in this case, although the address given on the petition differs from the address of record. A change of address should be filed in this case in accordance with MPEP 601.03. A courtesy copy of this decision is being mailed to the address noted on the petition. However, until otherwise instructed, all future correspondence regarding this application will be mailed solely to the address of record.

The application will be returned to the Office of Patent Application Processing for

1. <u>withdrawal of the Notice of Incomplete Provisional Application mailed May 22, 2008;</u>

2. <u>for mailing of a Notice of Omitted Item(s),</u>

3. <u>and for further processing as a nonprovisional application with a filing date of May 5, 2008, using the application papers filed on that date</u>.

Telephone inquiries concerning this matter should be directed to Attorney Derek Woods at (571) 272-3232.

Anthony Knight
Supervisor
Office of Petitions

CC: PERMAN & GREEN LLP
425 POST ROAD
FAIRFIELD, CT 06824

UNITED STATES PATENT AND TRADEMARK OFFICE

Commissioner for Patents
United States Patent and Trademark Office
P.O. Box 1450
Alexandria, VA 22313-1450
www.uspto.gov

Kathy Manke
Avago Technologies Limited
4380 Ziegler Road
Fort Collins CO 80525

COPY MAILED

APR 27 2009

OFFICE OF PETITIONS

In re Application of	:	
Jeff P. Kirsten	:	
Application No. 12/115,289	:	DECISION ON PETITION
Filed: May 5, 2008	:	
Attorney Docket No. 10041636-2	:	

This is a decision on the petition under the unintentional provisions of 37 CFR 1.137(b), filed February 11, 2009, to revive the above-identified application.

The petition is **GRANTED**.

The application became abandoned for failure to reply in a timely manner to the Notice to File Missing Parts of Nonprovisional Application (Notice), mailed May 23, 2008. The Notice set a period for reply of two (2) months from the mail date of the Notice. No extensions of time under the provisions of 37 CFR 1.136(a) were obtained. Accordingly, the application became abandoned on July 24, 2008. The Notice of Abandonment was mailed February 2, 2009.

The petition satisfies the requirements of 37 CFR 1.137(b) in that petitioner has supplied (1) the reply in the form of a preliminary amendment correcting the claim listing, (2) the petition fee of $1,620, and (3) a proper statement of unintentional delay.

It is not apparent whether the person signing the statement of unintentional delay was in a position to have firsthand or direct knowledge of the facts and circumstances of the delay at issue. Nevertheless, such statement is being treated as having been made as the result of a reasonable inquiry into the facts and circumstances of such delay. See 37 CFR 10.18(b) and Changes to Patent Practice and Procedure; Final Rule Notice, 62 Fed. Reg. 53131, 53178 (October 10, 1997), 1203 Off. Gaz. Pat. Office 63, 103 (October 21, 1997). In the event that such an inquiry has not been made, petitioner must make such an inquiry. If such inquiry results in the discovery that it is not correct that the entire delay in filing the required reply from the due date for the reply until the filing of a grantable petition pursuant to 37 CFR 1.137(b) was unintentional, petitioner must notify the Office.

There is no indication that the person signing the petition was ever given a power of attorney to prosecute the application. If the person signing the petition desires to receive future correspondence regarding this application, the appropriate power of attorney document must be submitted. While a courtesy copy of this decision is being mailed to the person signing the petition, all future correspondence will be directed to the address currently of record until appropriate instructions are received.

Telephone inquiries concerning this decision should be directed to Terri Williams at (571) 272-2991.

This application is being referred to the Office of Patent Application Processing for appropriate action on the reply received.

Chris Bottorff
Petitions Examiner
Office of Petitions

cc: **Robert A. Blaha**
SMITH FROHWEIN TEMPEL GREENLEE
& BLAHA LLC
Two Ravinia Drive, Suite 700
Atlanta, GA 30346

UNITED STATES PATENT AND TRADEMARK OFFICE

Commissioner for Patents
United States Patent and Trademark Office
P.O. Box 1450
Alexandria, VA 22313-1450
www.uspto.gov

JONES, WALKER, WAECHTER, POITEVENT, CARRÈRE & DENEGRE, L.L.P.
5TH FLOOR, FOUR UNITED PLAZA
8555 UNITED PLAZA BOULEVARD
BATON ROUGE LA 70809

MAILED

APR 16 2010

OFFICE OF PETITIONS

In re Application of	:	
Peter W. FAJKOWSKI	:	
Application No. 12/115,309	:	DECISION ON PETITION
Filed: May 05, 2008	:	TO WITHDRAW
Attorney Docket No. **18121/100233-10**	:	FROM RECORD
	:	

This is a decision on the Request to Withdraw as attorney or agent of record under 37 C.F.R. § 1.36(b), filed February 11, 2010.

The request is **NOT APPROVED** as moot.

A review of the file record indicates that the power of attorney to Jones, Walker, Waechter, Poitevent, Carrere and Denegr, L.L.P. has been revoked by the applicant of the patent application on April 07, 2010. Accordingly, the request to withdraw under 37 C.F.R. § 1.36(b) is moot.

All future communications from the Office will continue to be directed to the below-listed address until otherwise notified by applicant.

Telephone inquires concerning this decision should be directed to the undersigned at 571-272-4231.

Michelle R. Eason
Paralegal Specialist
Office of Petitions

cc: **CHOWDHURY & GEORGAKIS, P.C**
P.O. BOX 17299
SUGAR LAND, TX 77496

UNITED STATES PATENT AND TRADEMARK OFFICE

Commissioner for Patents
United States Patent and Trademark Office
P.O. Box 1450
Alexandria, VA 22313-1450
www.uspto.g

PEACOCK MYERS, P.C.
201 THIRD STREET, N.W.
SUITE 1340
ALBUQUERQUE, NM 87102

MAILED

MAR 22 2010

OFFICE OF PETITIONS

In re Application of	:	
Robert Salkeld	:	
Application No. 12/115,324	:	DECISION ON PETITION
Filed: May 5, 2008	:	TO MAKE SPECIAL UNDER
Attorney Docket No. 32426-CIP	:	37 CFR 1.102(c)(1)
	:	

This is a decision on the petition under 37 CFR 1.102(c)(1), filed May 5, 2008, to make the above-identified application special based on applicant's age as set forth in M.P.E.P. § 708.02, Section IV.

The petition is **GRANTED.**

A grantable petition to make an application special under 37 CFR 1.102(c)(1) and MPEP § 708.02, Section IV: Applicant's Age must be accompanied by evidence showing that at least one of the applicants is 65 years of age, or more, such as a birth certificate or a statement by applicant. No fee is required

The instant petition includes a statement from Inventor Robert Salkeld stating that he is over 65 years of age. Accordingly, the above-identified application has been accorded "special" status.

Telephone inquiries concerning this decision should be directed to Irvin Dingle at 571-272-3210. All other inquiries concerning either the examination or status of the application should be directed to the Technology Center.

The application is being forwarded to the Technology Center Art Unit 3644 for action on the merits commensurate with this decision.

Irvin Dingle
Petitions Examiner
Office of Petitions

PTO/SB/130 (03-08)
Approved for use through 05/31/2008. OMB 0651- 0031
U.S. Patent and Trademark Office; U.S. DEPARTMENT OF COMMERCE
Under the Paperwork Reduction Act of 1995, no persons are required to respond to a collection of information unless it contains a valid OMB control number

PETITION TO MAKE SPECIAL BASED ON AGE FOR ADVANCEMENT OF EXAMINATION UNDER 37 CFR 1.102(c)(1)

Application Information

Application Number	12115357	Confirmation Number	4955	Filing Date	2008-05-05
Attorney Docket Number (optional)	344-008--1	Art Unit		Examiner	
First Named Inventor	Gebhard				
Title of Invention	Re-Circulating Vacuum Apparatus for Cleaning Fabric and other non-Tensioned Surfaces				

Attention: Office of Petitions

An application may be made special for advancement of examination upon filing of a petition showing that the applicant is 65 years of age, or more. No fee is required with such a petition. See 37 CFR 1.102(c)(1) and MPEP 708.02 (IV).

APPLICANT HEREBY PETITIONS TO MAKE SPECIAL FOR ADVANCEMENT OF EXAMINATION IN THIS APPLICATION UNDER 37 CFR 1.102(c)(1) and MPEP 708.02 (IV) ON THE BASIS OF THE APPLICANT'S AGE.

A grantable petition requires one of the following items:
(1) Statement by one named inventor in the application that he/she is 65 years of age, or more; or
(2) Certification by a registered attorney/agent having evidence such as a birth certificate, passport, driver's license, etc. showing one named inventor in the application is 65 years of age, or more.

Name of Inventor who is 65 years of age, or older

Given Name	Middle Name	Family Name	Suffix
Donavan	J.	Allen	

A signature of the applicant or representative is required in accordance with 37 CFR 1.33 and 10.18.
Please see 37 CFR 1.4(d) for the format of the signature.

Select (1) or (2) :

○ (1) I am an inventor in this application and I am 65 years of age, or more.

◉ (2) I am an attorney or agent registered to practice before the Patent and Trademark Office, and I certify that I am in possession of evidence, and will retain such in the application file record, showing that the inventor listed above is 65 years of age, or more.

Signature	/Margaret Polson/	Date (YYYY-MM-DD)	2008-05-12
Name	Margaret Polson	Registration Number	42082

PTO/SB/130 (03-08)
Approved for use through 05/31/2008. OMB 0651- 0031
U.S. Patent and Trademark Office; U.S. DEPARTMENT OF COMMERCE
Under the Paperwork Reduction Act of 1995, no persons are required to respond to a collection of information unless it contains a valid OMB control number

Privacy Act Statement

The Privacy Act of 1974 (P.L. 93-579) requires that you be given certain information in connection with your submission of the attached form related to a patent application or patent. Accordingly, pursuant to the requirements of the Act, please be advised that: (1) the general authority for the collection of this information is 35 U.S.C. 2(b)(2); (2) furnishing of the information solicited is voluntary; and (3) the principal purpose for which the information is used by the U.S. Patent and Trademark Office is to process and/or examine your submission related to a patent application or patent. If you do not furnish the requested information, the U.S. Patent and Trademark Office may not be able to process and/or examine your submission, which may result in termination of proceedings or abandonment of the application or expiration of the patent.

The information provided by you in this form will be subject to the following routine uses:

1. The information on this form will be treated confidentially to the extent allowed under the Freedom of Information Act (5 U.S.C. 552) and the Privacy Act (5 U.S.C. 552a). Records from this system of records may be disclosed to the Department of Justice to determine whether the Fr eedom of Information Act requires disclosure of these records.

2. A record from this system of records may be disclosed, as a routine use, in the course of presenting evidence to a court, magistrate, or administrative tribunal, including disclosures to opposing counsel in the course of settlement negotiations.

3. A record in this system of records may be disclosed, as a routine use, to a Member of Congress submitting a request involving an individual, to whom the record pertains, when the individual has requested assistance from the Member with respect to the subject matter of the record.

4. A record in this system of records may be disclosed, as a routine use, to a contractor of the Agency having need for the information in order to perform a contract. Recipients of information shall be required to comply with the requirements of the Privacy Act of 1974, as amended, pursuant to 5 U.S.C. 552a(m).

5. A record related to an International Application filed under the Patent Cooperation Treaty in this system of records may be disclosed, as a routine use, to the International Bureau of the World Intellectual Property Organization, pursuant to the Patent Cooperation Treaty.

6. A record in this system of records may be disclosed, as a routine use, to another federal agency for purposes of National Security review (35 U.S.C. 181) and for review pursuant to the Atomic Energy Act (42 U.S.C. 218(c)).

7. A record from this system of records may be disclosed, as a routine use, to the Administrator, General Services, or his/her designee, during an inspection of records conducted by GSA as part of that agency's responsibility to recommend improvements in records management practices and programs, under authority of 44 U.S.C. 2904 and 2906. Such disclosure shall be made in accordance with the GSA regulations governing inspection of records for this purpose, and any other relevant (i.e., GSA or Commerce) directive. Such disclosure shall not be used to make determinations about indivi duals.

8. A record from this system of records may be disclosed, as a routine use, to the public after either publication of the application pursuant to 35 U.S.C. 122(b) or issuance of a patent pursuant to 35 U.S.C. 151. Further, a record may be disclosed, subject to the limitations of 37 CFR 1.14, as a routine use, to the public if the record was filed in an application which became abandoned or in which the proceedings were terminated and which application is referenced by either a published application, an application open to public inspections or an issued patent.

9. A record from this system of records may be disclosed, as a routine use, to a Federal, State, or local law enforcement agency, if the USPTO becomes aware of a violation or potential violation of law or regulation.

UNITED STATES PATENT AND TRADEMARK OFFICE

Commissioner for Patents
United States Patent and Trademark Office
P.O. Box 1450
Alexandria, VA 22313-1450
www.uspto.gov

In re Application of :
Albert W. Gebhard :

Application No. 12115357 :DECISION ON PETITION TO MAKE SPECIAL
Filed: :UNDER 37 CFR 1.102(c)(1)
:

Attorney Docket No. 344-008-1

This is a decision on the electronic petition under 37 CFR 1.102 (c)(1) ,filed 12-MAY-2008 to make the above-identified application special based on applicant's age as set forth in MPEP § 708.02, Section IV.

The petition is **GRANTED**.

A grantable petition to make an application special under 37 CFR 1.102(c)(1), MPEP § 708.02, Section IV: Applicant's Age must include a statement by applicant or a registered practitioner having evidence that applicant is at least 65 years of age. No fee is required.

Accordingly, the above-identified application has been accorded “special” status and will be taken up for action by the examiner upon the completion of all pre-examination processing.

Telephone inquires concerning this electronic decision should be directed to the Electronic Business Center at 866-217-9197.

All other inquires concerning either the examination or status of the application should be directed to the Technology Center.

UNITED STATES PATENT AND TRADEMARK OFFICE

UNITED STATES DEPARTMENT OF COMMERCE
United States Patent and Trademark Office
Address: COMMISSIONER FOR PATENTS
P.O. Box 1450
Alexandria, Virginia 22313-1450
www.uspto.gov

APPLICATION NO.	FILING DATE	FIRST NAMED INVENTOR	ATTORNEY DOCKET NO.	CONFIRMATION NO.
12/115,359	05/05/2008	Axel Aguado Granados	ROC920070658US1	4957

76793 7590 08/21/2008
Cahn & Samuels, LLP
1100 17th St., NW, Ste. 401
Washington, DC 20036

EXAMINER
CHO, JAMES HYONCHOL

ART UNIT	PAPER NUMBER
2819	

MAIL DATE	DELIVERY MODE
08/21/2008	PAPER

Please find below and/or attached an Office communication concerning this application or proceeding.

The time period for reply, if any, is set in the attached communication.

UNITED STATES PATENT AND TRADEMARK OFFICE

Commissioner for Patents
United States Patent and Trademark Office
P.O. Box 1450
Alexandria, VA 22313-1450
www.uspto.gov

Cahn & Samuels, LLP
1100 17th St., NW, Ste. 401
Washington, DC 20036

In re Application of:
GRANADOS *et al.*
Serial No.: 12/115,359
Filed: June 05, 2008
Title: **ENHANCED CML DRIVER CIRCUIT FOR "QUIET-DRIVER" MEASUREMENT ENABLEMENT**

DECISION ON PETITION TO MAKE SPECIAL FOR NEW APPLICATION UNDER 37 C.F.R. § 1.102 & M.P.E.P. § 708.02

This is a decision on the petition filed on June 05, 2008, to make the above-identified application special for accelerated examination procedure under 37 C.F.R. § 1.102(d).

The petition to make the application special is **DISMISSED**.

REGULATION AND PRACTICE

A grantable petition to make special under 37 C.F.R. § 1.102(d) and pursuant to the "Change to Practice for Petitions in Patent Applications to Make Special and for Accelerated Examination" published in the Federal Register on June 26, 2006 (71 Fed. Reg. 36323), must satisfy the following conditions:

I. Conditions Regarding the Application:

1. the application must be a non-reissue utility or design application filed under 37 CFR 1.111(a);
2. the application, the petition and the required fees must be filed electronically using the USPTO's electronic filing system (EFS), or EFS-web; if not filed electronically, a statement asserting that EFS and EFS-web were not available during the normal business hours.
3. at the time of filing, the application must be complete under 37 CFR 1.51 and in condition for examination;
4. the application must contain three or fewer independent claims and twenty or fewer total claims and the claims must be directed to a single invention.

II. Conditions Regarding the Petition:

The petition must:

1. be filed with the application;

2. include a statement that applicant agrees not to separately argue the patentability of any dependent claim during any appeal in the application;

3. include a statement that applicant agrees to make an election without traverse in a telephone interview.

4. include a statement that applicant agrees to conduct such an interview when requested by the examiner.

5. include a statement, made based on a good faith belief, that a preexamination search in compliance with the following requirements, was conducted, including an identification of the field of search by United States class and subclass, where applicable, and for database searches, the search logic or chemical structure or sequence used as a query, the name of the file(s) searched and the database service, and the date of the search.

The preexamination search must:

5.1 involve U.S. patents and patent application publications, foreign patent documents, and non-patent literature, unless the applicant can justify with reasonable certainty that no references more pertinent than those already identified are likely to be found in the eliminated sources and includes such a justification with this statement;

5.2. be directed to the claimed invention and encompass all of the features of the claims, giving the claims the broadest reasonable expectation;

5.3. encompass the disclosed features that may be claimed.

6. must provide in support of the petition an accelerated examination support document. An accelerated examination support document must include:

6.1. an information disclosure statement (IDS) in compliance with 37 CFR 1.98 citing each reference deemed most closely related to the subject matter of each of the claims;

6.2. an identification of all the limitations in the claims that are disclosed by the reference specifying where the limitation is disclosed in the cited reference;

6.3. a detailed explanation of how each of the claims are patentable over the references cited with particularity required by 37 CFR 1.111(b) and (c);

6.4. a concise statement of the utility of the invention as defined in each of the independent claims (unless the application is a design application);

6.5. a showing of where each limitation of the claims finds support under 35 USC 112, first paragraph, in the written description of the specification. If applicable, the showing must also identify: (1) each means- (or step) plus-function claim element that invokes consideration under 35 UDC 112, sixth paragraph; and (2) the structure, material, or acts in the specification that corresponds to each means- (or step) plus-function claim element that invokes consideration under 35 UDC 112, sixth paragraph; if the application claims the benefit of one or more applications under title 35, United States Code, the showing must also include where each limitation of the claims finds support under 35 USC 112, first paragraph, in each such application in which such supports exists;

6.6. an identification of any cited references that may be disqualified under 35 USC 103(c).

REVIEW OF FACTS

The conditions I.1-4; II.5, 5.1-5.3, 6, 6.1, 6.4 and 6.6, above are considered to have been met. However, the petition fails to comply with conditions section II, subsections 6.2-6.3 and 6.5, above. Therefore, the petition fails to meet the required conditions to be accorded special status under the accelerated examination procedure.

In order to meet the requirement of section II, subsection 6.2, the examination support document must include an identification of all the limitations in the claims that are disclosed by the reference, specifying where the limitation is disclosed in the cited reference. The examination support document accompanying the petition only discusses what each reference generally teaches. There is no correlation between the limitations set forth by the language of the claim and what each reference teaches. For the above reasons, the petition does not meet the requirements of section II, subsection 6.2, as set forth above.

Regarding the requirements of section II, subsection 6.3, a grantable petition requires a detailed description of how each of the claims are patentable over the references cited with particularity required by 37 CFR 1.111(b) and (c). 37 CFR § 1.111 (b) states "[a] general allegation that the claims define a patentable invention without specifically pointing out how the language of the claims patentably distinguishes them from the references does not comply with the requirements of this section." 37 CFR § 1.111 (c) states in part "the applicant or patent owner must clearly point out the patentable novelty which he or she thinks the claims present in view of the state of the art disclosed by the references cited." The support document states, "All of the references identified above fail to at least teach or suggest:", and then provides a reiteration of the claim 1. This amounts to a general allegation of patentability. Each reference should be discussed (in section II, subsection 6.2) indicating what it does disclose and then a detailed description (e.g., particular limitations of claim 1) of how each of the claims are patentable over the references cited with the particularity required by 37 CFR 1.111(b) and (c). Accordingly, the petition does not meet the requirements of section II, subsection 6.3, as set forth above.

Regarding the requirements of section II, subsection 6.5, the examination support document must include a showing of where **each limitation** of the application claims finds support under 35 USC 112, first paragraph, in the written description of the specification. The examination support document includes a broad statement of the support being found between a range of paragraphs. As such, the examination support document neither clearly shows support for each limitation, nor is it pointed out in the written description of the specification. A more specific description of where each limitation finds support is required. For these reasons, the petition does not meet the requirements of section II, subsection. 6.5, as set forth above.

DECISION

For the above-stated reasons, the petition is **dismissed**. The application will therefore be taken up by the examiner for action in its regular turn.

Petitioner is given a single opportunity to perfect the petition. Any request for reconsideration of this decision must be submitted within 1 (one) month or 30 (thirty) days, whichever is longer, from the date of this decision in order to be considered timely. Any request for reconsideration must address the deficiencies indicated above.

Petitioner is reminded that, upon granting of the special status of the application on request for reconsideration, the application will be processed expeditiously. However, due to the dismissal of the instant petition, examination may not be completed within twelve months of the filing date of the application.

Any inquiry regarding this decision should be directed to Clayton E. LaBalle, Quality Assurance Specialist (QAS), at (571) 272-1594.

Clayton E. LaBalle, QAS
Technology Center 2800
Semiconductors, Electrical and Optical
Systems and Components

UNITED STATES PATENT AND TRADEMARK OFFICE

UNITED STATES DEPARTMENT OF COMMERCE
United States Patent and Trademark Office
Address: COMMISSIONER FOR PATENTS
P.O. Box 1450
Alexandria, Virginia 22313-1450
www.uspto.gov

APPLICATION NO.	FILING DATE	FIRST NAMED INVENTOR	ATTORNEY DOCKET NO.	CONFIRMATION NO.
12/115,359	05/05/2008	Axel Aguado Granados	ROC920070658US1	4957

76793 7590 11/10/2008
Cahn & Samuels, LLP
1100 17th St., NW, Ste. 401
Washington, DC 20036

EXAMINER
CHO, JAMES HYONCHOL

ART UNIT	PAPER NUMBER
2819	

MAIL DATE	DELIVERY MODE
11/10/2008	PAPER

Please find below and/or attached an Office communication concerning this application or proceeding.

The time period for reply, if any, is set in the attached communication.

UNITED STATES PATENT AND TRADEMARK OFFICE

Commissioner for Patents
United States Patent and Trademark Office
P.O. Box 1450
Alexandria, VA 22313-1450
www.uspto.gov

Cahn & Samuels, LLP
1100 17th St., NW, Ste. 401
Washington, DC 20036

In re Application of: Axel A. Granados et al. Serial No.: 12/115,359 Filed: May 5, 2008 Attorney Docket No.: ROC920070658US1 Title: ENHANCED CML DRIVER CIRCUIT FOR "QUIET-DRIVER" MEASUREMENT ENABLEMENT	DECISION ON PETITION TO MAKE SPECIAL FOR NEW APPLICATION UNDER 37 C.F.R. § 1.102 & M.P.E.P. § 708.02

This is a decision on the renewed petition filed on September 18, 2008 to make the above-identified application special for accelerated examination procedure under 37 C.F.R. § 1.102(d).

The renewed petition to make the application special is **DENIED**.

A petition to make special was filed in the above-identified application under 37 C.F.R. § 1.102(d) on May 5, 2008. The petition was dismissed in a decision dated August 20, 2008 wherein a non-extendible period of 1 (one) month or 30 (thirty) days, whichever was longer, was set to request reconsideration. The renewed petition was timely filed on September 18, 2008.

The reasons for dismissal were: 1) a failure to identify all the limitations in the claims that are disclosed by the references (condition II. 6.2); 2) a failure to provide a detailed explanation of how the claims are patentable over the references cited with the particularity required by 37 C.F.R. §1.111(b) and (c) (condition II.6.3); and 3) a failure to show where ***each claim limitation*** finds support under 35 USC 112, first paragraph, in the written description of the specification (condition II.6.5).

Although an improvement over the previous accelerated examination support document (AESD) filed on May 5, 2008, the revised AESD filed on September 18, 2008 fails to correct the deficiencies of the previous AESD. While the deficiency relating to condition II.6.3 has been adequately addressed in the revised AESD, the revised support document fails to adequately correct the deficiencies of the previous support document relating to conditions II.6.2 and II.6.5.

As indicated in the petition decision of August 20, 2008, item 6.2 of the Conditions Regarding the Petition requires "an identification of all the limitations in the claims that are disclosed by the reference specifying where the limitation is disclosed in the cited reference." The previous AESD provided only a general discussion of what each reference teaches and did not set forth any correlation between the claim limitations and what each reference teaches. The present

AESD provides only a general discussion of the reference to Ziazadeh et al. (7,224,189) and does not set forth any correlation between the claim limitations and what the reference teaches. While Yang (6,518,797) is reported to disclose "disabling the current source causing the pull-up termination circuitry to become high impedance" in column 2, lines 59-65, there is no mention of either a "current source" or "pull-up termination circuitry" in the cited passage. Consequently, it is not clear how the claim limitation correlates with what the reference teaches. Similarly, it is not clear how the claim limitation correlates with what the reference to Wong et al. (5,600,267) teaches. For these reasons, revised AESD does not adequately show where the claim limitation is disclosed in the cited references.

As also indicated in the petition decision of August 20, 2008, item 6.5 of the Conditions Regarding the Petition requires a showing where ***each limitation*** of the application claims finds support under 35 USC 112, first paragraph, in the written description of the specification. While the support document indicates that support is found at least in Fig. 2 and paragraphs [0015] - [0021] of the specification, the support document fails to mention any specific step of the claim and show where support for that step can be found in the written description of the specification. A mere invitation to read a substantial portion of the specification does not provide a proper showing of where ***each limitation*** of the application claims finds support under 35 USC 112, first paragraph, in the written description of the specification. Consequently, the revised AESD fails to adequately show where ***each limitation*** of the application claim finds support under 35 USC 112, first paragraph, in the written description of the specification.

For the above stated reasons, the renewed petition is denied. The application will therefore be taken up the examiner for action in its regular turn.

Petitioner is reminded that a single opportunity to perfect the petition is given. Therefore, further petitions for accelerated examination in this application will not be entertained.

Any inquiry regarding this decision should be directed to the undersigned at (571) 272-1594.

Clayton E. LaBalle

Clayton E. LaBalle, Quality Assurance Specialist
Technology Center 2800
Semiconductors, Electrical and Optical
Systems and Components

CL/JC

UNITED STATES PATENT AND TRADEMARK OFFICE

UNITED STATES DEPARTMENT OF COMMERCE
United States Patent and Trademark Office
Address: COMMISSIONER FOR PATENTS
P.O. Box 1450
Alexandria, Virginia 22313-1450
www.uspto.gov

Mary M. Lee
MARY M LEE, P.C.
1300 E. NINTH STREET
SUITE 4
EDMOND, OK 73034-5760

Mail Date: 04/20/2010

Applicant	: Robert D. Magness	: DECISION ON REQUEST FOR
Patent Number	: 7601928	: RECALCULATION of PATENT
Issue Date	: 10/13/2009	: TERM ADJUSTMENT IN VIEW
Appliction No	: 12/115,399	: OF WYETH AND NOTICE OF INTENT TO
Filed	: 05/05/2008	: ISSUE CERTIFICATE OF CORRECTION
		:

The Request for Recalculation is **GRANTED** to the extent indicated.

The patent term adjustment has been determined to be **0** days. The USPTO will *sua sponte* issue a certificate of correction reflecting the amount of PTA days determined by the recalculation.

Prior to the issuance of the certificate of correction, the USPTO will afford patentee an opportunity to be heard and request reconsideration. Accordingly, patentee has **one month or thirty (30) days**, whichever is longer, to file a request for reconsideration of this patent term adjustment calculation. See 35 U.S.C. 154(b)(3)(B)(ii) and 37 CFR 1.322(a)(4). No extensions of time will be granted under 37 CFR 1.136.

Patentee should use document code PET.OP if electronically filing a request for reconsideration of this patent term adjustment calculation. The patentee must also include the information required by 37 CFR 1.705(b)(2) and the fee required by 37 CFR 1.18(e). If patentee does not file a timely request for reconsideration of this patent term adjustment calculation including the information required by 37 CFR 1.705(b)(2) and the fee required by 37 CFR 1.18(e), the USPTO will issue a certificate of correction reflecting the PTA determination noted above.

Patentee should be aware that in order to preserve the right to review in the United States District Court for the District of Columbia of the USPTO patent term adjustment determination, patentee must ensure that he or she also take the steps required under 35 U.S.C. 154(b)(4)(A) in a timely manner. Nothing in the request for recalculation should be construed as providing an alternative time frame for commencing a civil action under 35 U.S.C. 154(b)(4)(A).

Any questions concerning this decision should be directed to the Office of Patent Legal Administration at 571-272-7702.

UNITED STATES PATENT AND TRADEMARK OFFICE

Commissioner for Patents
United States Patent and Trademark Office
P.O. Box 1450
Alexandria, VA 22313-1450
www.uspto.gov

BUHLER ASSOCIATES
BUHLER, KIRK A.
1101 CALIFORNIA AVE.
SUITE 208
CORONA CA 92881

MAY 23 2008

In re Application of: WERNER Serial No.: 12/115,468 Filed: May 5, 2008 Title: NATURAL AIR ENERY SAVING TEMPERATURE ASSIST SYSTEM FOR CENTRAL AIR CONDITIONING / HEATING SYSTEM	DECISION ON PETITION TO MAKE SPECIAL FOR NEW APPLICATION UNDER 37 C.F.R. § 1.102 & M.P.E.P. § 708.02

This is a decision on the petition filed on May 9, 2008 to make the above-identified application special for accelerated examination procedure under 37 C.F.R. § 1.102(d).

The petition to make the application special is **DENIED**.

REGULATION AND PRACTICE

To be eligible for accelerated examination under 37 C.F.R. § 1.102(d) and pursuant to the "Change to Practice for Petitions in Patent Applications to Make Special and for Accelerated Examination" published in the Federal Register on June 26, 2006 (71 Fed. Reg. 36323), the following conditions must be satisfied:

1. The application must be a non-reissue utility or design application filed under 37 CFR 1.111(a);
2. The application, the petition and the required fees must be filed electronically using the USPTO's electronic filing system (EFS), or EFS-web; if not filed electronically, a statement asserting that EFS and EFS-web were not available during the normal business hours;
3. The application, at the time of filing, must be complete under 37 CFR 1.51 and in condition for examination;
4. The application must contain three or fewer independent claims and twenty or fewer total claims and the claims must be directed to a single invention.
5. The petition must be filed with the application.

The application as filed is not eligible for the accelerated examination under 37 C.F.R. § 1.102(d) because the petition was not filed with the application.

As noted in the policy statement referenced above, any petition to make special filed on or after the effective date must meet the new requirements set forth in the 71 Fed. Reg. 36323 notice. The effective date of the change in practice was August 25, 2006. Thus the instant petition must be reviewed under the revised practice and the instant application is ineligible.

The petition appears on its face to have been filed without recognition of the August 25, 2006 policy change to the petition to make special program. The changes to the program are substantial. Notably, special status based upon categories such as conservation of energy resources are no longer available. A copy of Federal Register on June 26, 2006 (71 Fed. Reg. 36323) is being attached to the mailed decision for petitioner's review.

For the above-stated reasons, the petition is **DENIED**. The application will therefore be taken up by the examiner for action in its regular turn.

Any inquiry regarding this decision should be directed to J. Harrison, TC 3700 Special Program Examiner, at (571) 272-4449.

J. Harrison
Special Program Examiner
Technology Center 3700

UNITED STATES PATENT AND TRADEMARK OFFICE

Commissioner for Patents
United States Patent and Trademark Office
P.O. Box 1450
Alexandria, VA 22313-1450
www.uspto.gov

DAVIS WRIGHT TREMAINE, LLP/SEATTLE
1201 THIRD AVENUE, SUITE 2200
SEATTLE WA 98101-3045

MAILED

OCT 15 2009

OFFICE OF PETITIONS

In re Application of
NICHOLS, Jack A.
Application No. 12/115,476
Filed: May 05, 2008
Attorney Docket No. **85109-5**

DECISION ON PETITION TO WITHDRAW FROM RECORD

This is a decision on the Request to Withdraw as attorney or agent of record under 37 C.F.R. § 1.36(b), filed September 28, 2009.

The request is **APPROVED**.

A grantable request to withdraw as attorney/agent of record must be signed by every attorney/agent seeking to withdraw or contain a clear indication that one attorney is signing on behalf of another/others. The Office requires the practitioner(s) requesting withdrawal to certify that he, she, or they have: (1) given reasonable notice to the client, prior to the expiration of the response period, that the practitioner(s) intends to withdraw from employment; (2) delivered to the client or a duly authorized representative of the client all papers and property (including funds) to which the client is entitled; and (3) notified the client of any responses that may be due and the time frame within which the client must respond, pursuant 37 CFR 10.40(c).

The request was signed by George Rondeau, Jr. on behalf of all attorneys of record who are associated with customer No. 22504. All attorneys/agents associated with the Customer Number 22504 have been withdrawn. Applicant is reminded that there is no attorney of record at this time.

The request to change the correspondence address of record is not acceptable as the requested correspondence address is not that of: (1) the first named signing inventor; or (2) an intervening assignee of the entire interest under 37 C.F.R 3.71. All future communications from the Office will be directed to the first named signing inventor at the first copied address below until otherwise properly notified by the applicant.

Telephone inquiries concerning this decision should be directed to Tredelle Jackson at 571-272-2783.

Tredelle D. Jackson
Paralegal Specialist
Office of Petitions

cc: **JACK A. NICHOLS**
10832 NE 68TH ST., APT. A2
KIRKLAND WA 98033

cc: **KIVATI SOFTWARE, LLC**
10900 NE 4TH STREET, SUITE 2110
BELLEVUE WA 98004

UNITED STATES PATENT AND TRADEMARK OFFICE

Commissioner for Patents
United States Patent and Trademark Office
P.O. Box 1450
Alexandria, VA 22313-1450
www.uspto.gov

DAVIS WRIGHT TREMAINE, LLP/SEATTLE
1201 THIRD AVENUE, SUITE 2200
SEATTLE WA 98101-3045

COPY MAILED

OCT 21 2009

OFFICE OF PETITIONS

In re Application of	:	
Jack A. Nichols	:	DECISION ON PETITION
Application No. 12/115,479	:	TO WITHDRAW
Filed: May 5, 2008	:	FROM RECORD
Attorney Docket No. 85109-6	:	

This is a decision on the request to withdraw as attorney of record under 37 C.F.R. § 1.36, filed September 28, 2009.

The request is **APPROVED**.

A grantable request to withdraw as attorney/agent of record must be signed by every attorney/agent seeking to withdraw or contain a clear indication that one attorney is signing on behalf of another/others. The Office will require the practitioner(s) to certify that he, she or they have: (1) given reasonable notice to the client, prior to the expiration of the reply period, which the practitioner(s) intends to withdraw from employment; (2) delivered to the client or a duly authorized representative of the client all papers and property (including funds) to which the client is entitled; and (3) notified the client of any replies that may be due and the time frame within which the client must respond, pursuant to 37 CFR 10.40 (c).

The request was signed by George C. Rondeau, Jr. on behalf of all attorneys of record who are associated with Customer No. 22504.

All attorneys/agents associated with Customer Number 22504 have been withdrawn. Applicant is reminded that there is no attorney of record at this time.

All future correspondence will be directed to the assignee at the address indicated below.

Currently, there is no outstanding Office action that requires a reply.

Telephone inquires concerning this decision should be directed to the undersigned at (571) 272-7751. All other inquires concerning either the examination or status of the application should be directed to the Technology Center.

Joan Olszewski
Petitions Examiner
Office of Petitions

cc: Kivati Software, LLC
10900 NE 4th Street, Suite 2110
Bellevue WA 98004

UNITED STATES PATENT AND TRADEMARK OFFICE

Commissioner for Patents
United States Patent and Trademark Office
P.O. Box 1450
Alexandria, VA 22313-1450
www.uspto.gov

DAVIS WRIGHT TREMAINE, LLP/SEATTLE
1201 THIRD AVENUE, SUITE 2200
SEATTLE, WA 98101-3045

COPY MAILED

DEC 17 2009

OFFICE OF PETITIONS

In re Application of

Jack A. NICHOLS
Application No. 12/115,483
Filed: May 5, 2008
Attorney Docket No. **85109-7**

DECISION ON PETITION TO WITHDRAW FROM RECORD

This is a decision on the Request to Withdraw as attorney or agent of record under 37 C.F.R. § 1.36(b), filed September 28, 2009.

The request is **NOT APPROVED**.

The request to withdraw as attorney/agent of record and change of correspondence address is hereby not accepted. Petitioner has not complied with current USPTO requirements, set forth in 37 CFR 10.40 concerning Request for Withdrawal as Attorney and Change of Correspondence Address.

Petitioner has not properly submitted forwarding correspondence address information for the application.

The Office will only accept correspondence address changes to the most current address information provided for the assignee of the entire interest ***who properly became of record*** *under 37 CFR 3.71*, or if no assignee of the entire interest has properly been made of record, the most current address information provided for the first named inventor. 37 CFR 3.71 (c) states:

> ***An assignee becomes of record either in a national patent application or a reexamination proceeding by filing a statement in compliance with § 3.73 (b) that is signed by a party who is authorized to act on behalf of the assignee.***

The Office will also no longer change the correspondence address to that of a new practitioner unless the Request is accompanied by a power of attorney to a new practitioner (e.g., Form PTO/SB/82). All future communications from the Office will be directed to the above-listed address until otherwise properly notified by the applicant or a proper change of correspondence address has been submitted.

Telephone inquiries concerning this decision should be directed to the undersigned at 571-272-7253. All other inquires concerning either the examination or status of the application should be directed to the Technology Center.

/Monica A. Graves/
Petitions Examiner, Office of Petitions

UNITED STATES PATENT AND TRADEMARK OFFICE

Commissioner for Patents
United States Patent and Trademark Office
P.O. Box 1450
Alexandria, VA 22313-1450
www.uspto.gov

DAVIS WRIGHT TREMAINE, LLP/Seattle
1201 THIRD AVENUE, SUITE 2200
SEATTLE, WA 98101-3045

MAILED

FEB 19 2010

OFFICE OF PETITIONS

In re Application of
Jack A. NICHOLS
Application No. 12/115,483
Filed: May 5, 2008
Attorney Docket No. **85109-7**

DECISION ON PETITION TO WITHDRAW FROM RECORD

CORRECTED DECISION

This is a decision on the Request to Withdraw as attorney or agent of record under 37 C.F.R. § 1.36(b), filed September 28, 2009.

The request is **APPROVED**.

A grantable request to withdraw as attorney/agent of record must be signed by every attorney/agent seeking to withdraw or contain a clear indication that one attorney is signing on behalf of another/others.

The request was signed by George C. Rondeau on behalf of all attorneys of record. All attorneys/agents associated have been withdrawn. Applicant is reminded that there is no attorney of record at this time.

All future communications from the Office will be directed to the assignee of the entire interest at the address below until otherwise properly notified by the applicant.

Telephone inquiries concerning this decision should be directed to the undersigned at 571-272-7253.

/Monica A. Graves/
Petitions Examiner, Office of Petitions

cc: **KIVATI SOFTWARE, LLC**
10900 NE 4TH STREET, SUITE 2110
BELLEVUE, WA 98004

UNITED STATES PATENT AND TRADEMARK OFFICE

Commissioner for Patents
United States Patent and Trademark Office
P.O. Box 1450
Alexandria, VA 22313-1450
www.uspto.gov

DAVIS WRIGHT TREMAINE, LLP/SEATTLE
1201 THIRD AVENUE, SUITE 2200
SEATTLE WA 98101-3045

COPY MAILED

NOV 0 4 2009

OFFICE OF PETITIONS

In re Application of
NICHOLS, Jack A.
Application No. 12/115,487
Filed: May 05, 2008
Attorney Docket No. **85109-8**

DECISION ON PETITION
TO WITHDRAW
FROM RECORD

This is a decision on the Request to Withdraw as attorney or agent of record under 37 C.F.R. § 1.36(b), filed September 28, 2009.

The request is **APPROVED**.

A grantable request to withdraw as attorney/agent of record must be signed by every attorney/agent seeking to withdraw or contain a clear indication that one attorney is signing on behalf of another/others. The Office requires the practitioner(s) requesting withdrawal to certify that he, she, or they have: (1) given reasonable notice to the client, prior to the expiration of the response period, that the practitioner(s) intends to withdraw from employment; (2) delivered to the client or a duly authorized representative of the client all papers and property (including funds) to which the client is entitled; and (3) notified the client of any responses that may be due and the time frame within which the client must respond, pursuant 37 CFR 10.40(c).

The request was signed by George Rondeau, Jr. on behalf of all attorneys of record who are associated with customer No. 22504. All attorneys/agents associated with the Customer Number 22504 have been withdrawn. Applicant is reminded that there is no attorney of record at this time.

The request to change the correspondence address of record is not acceptable as the requested correspondence address is not that of: (1) the first named signing inventor; or (2) an intervening assignee of the entire interest under 37 C.F.R 3.71. All future communications from the Office will be directed to the first named signing inventor or the assignee of the entire interest at the first copied address below until otherwise properly notified by the applicant.

Telephone inquiries concerning this decision should be directed to Tredelle Jackson at 571-272-2783.

/Tredelle D. Jackson/
Petitions Examiner
Office of Petitions

cc: **JACK A. NICHOLS**
10832 NE 68TH ST., APT. A2
KIRKLAND WA 98033

cc: **KIVATI SOFTWARE, LLC**
10900 NE 4TH STREET, SUITE 2110
BELLEVUE WA 98004

UNITED STATES PATENT AND TRADEMARK OFFICE

Commissioner for Patents
United States Patent and Trademark Office
P.O. Box 1450
Alexandria, VA 22313-1450
www.uspto.gov

ZHEN ZHENG LU
1730 HUNTINGTON DRIVE #304
DUARTE CA 91010

MAILED

JUL 22 2010

OFFICE OF PETITIONS

In re Application of	:	
Fuyou Shi	:	
Application No. 12/115,560	:	DECISION ON PETITION
Filed: May 6, 2008	:	
Attorney Docket No. AWUP47-PAT57	:	

This is a decision on the petition under the unintentional provisions of 37 CFR 1.137(b), filed June 15, 2010, to revive the above-identified application.

The petition is **GRANTED**.

This application became abandoned for failure to timely pay the issue and publication fees on or before May 4, 2010, as required by the Notice of Allowance and Fee(s) Due, mailed February 4, 2010. Accordingly, the date of abandonment of this application is May 5, 2010. The Notice of Abandonment was mailed May 24, 2010.

The petition satisfies the requirements of 37 CFR 1.137(b) in that petitioner has supplied (1) the reply in the form of payment of the issue fee of $755 and the publication fee of $300; (2) the petition fee of $810; (3) a proper statement of unintentional delay; and (4) the terminal disclaimer (and fee as set forth in 37 CFR 1.20(d)) required by 37 CFR 1.137(d).

There is a balance of $5 due for the filing of the Terminal Disclaimer. The petitioner paid $65 and the current Terminal Disclaimer fee is $70. There is no authorization to charge a deposit account.

Telephone inquiries concerning this decision should be directed to Terri Johnson at (571) 272-2991.

This application is being referred to the Office of Data Management for processing into a patent.

Terri Johnson

Terri Johnson
Petitions Examiner
Office of Petitions

UNITED STATES PATENT AND TRADEMARK OFFICE

Commissioner for Patents
United States Patent and Trademark Office
P.O. Box 1450
Alexandria, VA 22313-1450
www.uspto.gov

MAIL
JUL 09 2008
DIRECTOR'S OFFICE
TECHNOLOGY CENTER 2600

David E. Rodrigues
CANTOR COLBURN LLP-IBM YORKTOWN
20 Church Street
22nd Floor
Hartford CT 06103

In re Application of:
Rudolf Bolle et al
Serial No.: 12/115,584
Filed: May 06, 2008
Attorney Docket number: YOR920070545US1
Title: **PROJECTION OF LIGHT PATTERNS FOR LIVENESS VERIFICATION OF BIOMETRICS**

DECISION ON PETITION TO MAKE SPECIAL FOR NEW APPLICATION UNDER 37 C.F.R. § 1.102 & M.P.E.P. § 708.02

This is a decision on the petition filed on May 6, 2008 to make the above-identified application special for accelerated examination procedure under 37 C.F.R. § 1.102(d).

The petition to make the application special is **DISMISSED**.

REGULATION AND PRACTICE

A grantable petition to make special under 37 C.F.R. § 1.102(d) and pursuant to the "Change to Practice for Petitions in Patent Applications to Make Special and for Accelerated Examination" published in the Federal Register on June 26, 2006 (71 Fed. Reg. 36323), must satisfy the following conditions:

I. Conditions Regarding the Application:

1. the application must be a non-reissue utility or design application filed under 37 CFR 1.111(a);

2. the application, the petition and the required fees must be filed electronically using the USPTO's electronic filing system (EFS), or EFS-web; if not filed electronically, a statement asserting that EFS and EFS-web were not available during the normal business hours.

3. at the time of filing, the application must be complete under 37 CFR 1.51 and in condition for examination;

4. the application must contain three or fewer independent claims and twenty or fewer total claims and the claims must be directed to a single invention.

II. Conditions Regarding the Petition:

The petition must:

1. be filed with the application;

2. include a statement that applicant agrees not to separately argue the patentability of any independent claim during any appeal in the application;

3. include a statement that applicant agrees to make an election without traverse in a telephone interview.

4. include a statement that applicant agrees to conduct such an interview when requested by the examiner.

5. include a statement, made based on a good faith belief, that a preexamination search in compliance with the following requirements, was conducted, including an identification of the filed of search by United States class and subclass, where applicable, and for database searches, the search logic or chemical structure or sequence used as a query, the name of the file(s) searched and the database service, and the date of the search.

The preexamination search must:

5.1 involve U.S. patents and patent application publications, foreign patent documents, and non-patent literature, unless the applicant can justify with reasonable certainty that no references more pertinent than those already identified are likely to be found in the eliminated sources and includes such a justification with this statement;

5.2. be directed to the claimed invention and encompass all of the features of the claims, giving the claims the broadest reasonable interpretation;

5.3. encompass the disclosed features that may be claimed.

6. must provide in support of the petition an accelerated examination support document. An accelerated examination support document must include:

6.1. an information disclosure statement (IDS) in compliance with 37 CFR 1.98 citing each reference deemed most closely related to the subject matter of each of the claims;

6.2. an identification of all the limitations in the claims that are disclosed by the reference specifying where the limitation is disclosed in the cited reference;

6.3. a detailed explanation of how each of the claims are patentable over the references cited with particularity required by 37 CFR 1.111(b) and (c);

6.4. a concise statement of the utility of the invention as defined in each of the independent claims (unless the application is a design application);

6.5. a showing of where each limitation of the claims finds support under 35 USC 112, first paragraph, in the written description of the specification. If applicable, the showing must also identify: (1) each means- (or step) plus-function claim element that invokes consideration under 35 USC 112, sixth paragraph; and (2) the structure, material, or acts in the specification that corresponds to each means- (or step) plus-function claim element that invokes consideration under 35 USC 112, sixth paragraph; if the application claims the benefit of one or more applications under title 35, United States Code, the showing must also include where each limitation of the claims finds support under 35 USC 112, first paragraph, in each such application in which such supports exists;

6.6. an identification of any cited references that may be disqualified under 35 USC 103(c).

REVIEW OF FACTS

The conditions set forth under section I. above are considered to have been met. However, the petition fails to comply with conditions set forth under section II. items 5. , 5.1. , 6.2 and 6.3.

Regarding the requirement in item 5 above, the preexamination search document provided with the instant petition is deficient as follows: the US Field of Search and Databases Searches which are to be provided under section 8(a) are not sufficient. In addition to the field of search provided, petitioner would also need to search in the following class/sublasses:

340/5.52-5.53, 5.82-5.84;
351/211.

Furthermore, the search logic appears unduly limiting. The search logic should be more detailed using a number of different strings. Other terms need to be used in various combinations, such as:

pattern, project$3, diffus$3, reflect$3, light$3, or compar$3

The keyword operators should be modified to include searching in all listed field of search areas.

Please note that any request for reconsideration must include an Information Disclosure Statement citing any newly found relevant prior art and an updated Accelerated Examination Support Document (AESD) meeting all of requirements 6.1 – 6.6 for any documents uncovered by the new search(es) as required above

Regarding the requirement in item 6.2 above, the Accelerated Examination Support Document is deficient in section 9(b) because applicant has failed to provide "an identification of all the limitations in the claims that are disclosed by the reference specifying where the limitation is disclosed in the cited reference". For example, applicant has only discussed elements (a)(i) and (d) of claim 1. It is unclear if the Hanna reference teaches the other limitations of the claim. Therefore, applicant must provide a more detailed explanation.

Regarding the requirements of item 6.3, above, the Accelerated Examination Support Document is deficient because section 9(C) fails to provide a "detailed explanation of how ***each of the claims*** are patentable over each of the references cited with particularity required by 37 CFR 1.111(b) and (c)" (emphasis added). Applicant provided only an explanation of how the independent claim 1 is patentable over the reference cited. There is no discussion of how dependent claims 2-6 are patentable over the Hanna reference.

For these reasons cited above, the petition fails to meet the required conditions to be accorded special status under the accelerated examination procedure.

DECISION

For the above-stated reasons, the petition is **dismissed**. The application will therefore be taken up by the examiner for action in its regular turn.

Petitioner is given a single opportunity to perfect the petition. Any request for reconsideration of this decision must be submitted within 1 (one) month or 30 (thirty) days, whichever is longer, (no extension of time under 37 CFR 1.136(a)) from the date of this decision in order to be considered timely. Any request for reconsideration must address the deficiencies indicated above.

Petitioner is reminded that, upon granting of the special status of the application on request for reconsideration, the application will be processed expeditiously. However, due to the dismissal of the instant petition, examination may not be completed within twelve months of the filing date of the application.

Any inquiry regarding this decision should be directed to Eileen Lillis, Quality Assurance Specialist, at (571) 272-6928.

/Eileen Lillis/

Eileen Lillis
Quality Assurance Specialist
Technology Center 2600

UNITED STATES PATENT AND TRADEMARK OFFICE

Commissioner for Patents
United States Patent and Trademark Office
P.O. Box 1450
Alexandria, VA 22313-1450
www.uspto.gov

MAIL

OCT 16 2008

DIRECTOR'S OFFICE
TECHNOLOGY CENTER 2600

CANTOR COLBURN LLP - IBM FISHKILL
20 Church Street
22nd Floor
Hartford CT 06103

In re Application of: Rudolf M. Bolle et al. Serial No.: 12/115,584 Filed: 05/06/2008 Docket: YOR920070545US1 Title: PROJECTION OF LIGHT PATTERNS FOR LIVENESS VERIFICATION OF BIOMETRICS	DECISION ON PETITION TO MAKE SPECIAL FOR NEW APPLICATION UNDER 37 C.F.R. § 1.102 & M.P.E.P. § 708.02

This is a decision on the petition filed on May 06, 2008 with a revised AE support document dated 8/11/2008 to make the above-identified application special for accelerated examination procedure under 37 C.F.R. § 1.102(d).

The petition to make the application special is **GRANTED.**

The application is eligible for accelerated examination and the petition complies with the conditions for granting the application special status pursuant to the "Change to Practice for Petitions in Patent Applications to Make Special and for Accelerated Examination" published June 26, 2006, in the Federal Register. (71 Fed. Reg. 36323).

The prosecution of the instant application will be conducted expeditiously according to the following guidelines.

1. The application will be docketed to an examiner and taken up for action within two weeks of the date of this decision.

2. Restriction Practice:
   If the examiner determines that the claims are not directed to a single invention, a telephone request to elect one single invention will be made pursuant to MPEP 812.01. As a prerequisite to the grant of this petition, the applicant has agreed to make an oral election, by telephone, without traverse. If the applicant refuses to make an election without traverse, or the examiner cannot reach the applicant after a reasonable effort, the

examiner will treat the first claimed invention (invention defined by claim 1) as having being constructively elected without traverse for examination.

3. Office action:
   If it is determined that, after appropriate consultation, there is a potential rejection or any other issue to be addressed, the examiner will telephone the applicant and arrange an interview to discuss and resolve the issue. An Office action, other than a Notice of Allowance and Fee(s) Due (Notice of Allowance), will not be issued unless either: 1) an interview was conducted but did not result in agreed to action that places the application in condition for allowance, or, 2) a determination is made that an interview would be unlikely to result in the application being placed in condition for allowance, and 3) an internal conference has been held to review any rejection of any claim.

4. Time for Reply:
   An Office action other than a Notice of Allowance or a final Office action will set a shortened statutory period of one month or thirty days, whichever is longer, for reply with no extension of time available under 37 CFR 1.136(a). Failure to timely file a reply within this non-extendible period for reply will result in the abandonment of the application.

5. Reply by Applicant:
   A timely reply to an Office action other than the Notice of Allowance must be submitted electronically via EFS or EFS-web and limited to addressing the rejections, objections and requirement made. Any amendment that attempts to: 1) add claims which would result in more than three pending independent claims or more than twenty pending total claims; 2) present claims not encompassed by the pre-examination search or an updated accelerated examination support document; or 3) present claims that are directed a non-elected invention or an invention other than that previously claimed and examined in the application, will be treated as not fully responsive and will not be entered.

   For any amendment to the claims (including any new claim) that is not encompassed by the accelerated examination support document, applicant must provide an updated accelerated examination support document that encompasses the amended or new claims at the time of filing of the amendment.

   To proceed expeditiously with the examination, it is recommended that a reply with amendments made to any claim or with any new claim being added be accompanied by an updated accelerated examination support document or a statement explaining how the amended or new claim is supported by the original accelerated examination support document.

6. Information Disclosure Statement (IDS):
   Any IDS filed during prosecution must be submitted electronically via EFS or EFS-web, accompanied by an updated accelerated examination support document, and be in compliance with 37 CFR 1.97 and 1.98.

7. Post-Allowance Processing:
   To expedite processing of the allowed application into a patent, the applicant must: 1) pay the required fees within one month of the date of the Notice of Allowance, and 2) not file any post allowance papers not required by the Office. In no event may the issue fee be paid and accepted later than three months from the date of the Notice of Allowance.

8. After-Final and Appeal Procedures:
   To expedite prosecution, after receiving the final Office action, applicant must: 1) promptly file a notice of appeal, an appeal brief and appeal fees; and 2) not request a pre-appeal brief conference.

   Any amendment, affidavit or other evidence filed after final Office action must comply with applicable rules and the requirements outlined in numbered paragraphs 5 and 6 above.

   On appeal, the application will proceed according to normal appeal procedures. After appeal, the application will again be treated special.

9. Proceedings Outside the Normal Examination Process:
   If the application becomes involved in a proceeding that is outside the normal examination process (e.g., a secrecy order, national security review, interference proceeding, petitions under 37 CFR 1.181, 182 or 183), the application will be treated special before and after such proceeding.

10. Final Disposition:
    The twelve month goal of this accelerated examination procedure ends with a final disposition. The mailing of a final Office action, a Notice of Allowance, the filing of a Notice of Appeal, or the filing of a Request for Continued Examination (RCE) is the final disposition.

If, during prosecution, a paper is not filed electronically using EFS-web, a reply is filed but is not fully responsive, the application is involved in an appeal, or a proceeding outside normal examination process, the application will still be examined expeditiously, however, the final disposition may occur more than twelve months from the filing of the application.

Any inquiry regarding this decision should be directed to Kenneth Wieder, Special Program Examiner, at (571) 272-2986.

Kenneth A. Wieder,
Quality Assurance Specialist
Technology Center 2600
Communications

UNITED STATES PATENT AND TRADEMARK OFFICE

Commissioner for Patents
United States Patent and Trademark Office
P.O. Box 1450
Alexandria, VA 22313-1450
www.uspto.gov

CANTOR COLBURN LLP
IBM Research Triangle Park
20 Church Street, 22nd Floor
Hartford, CT 06103

JUN 23 2008

In re Application of:	:	
Moises Cases et al.	:	
Serial No.: 12/115,586	:	DECISION ON PETITION TO
Filed: May 6, 2008	:	MAKE SPECIAL FOR NEW
Docket No.: RPS920080047US1	:	APPLICATION UNDER 37
Title: HIGH-SPEED CABLE HAVING INCREASED CURRENT RETURN UNIFORMITY AND METHOD OF MAKING SAME	:	C.F.R. § 1.102 & M.P.E.P. § 708.2

This is a decision on the petition filed on May 6, 2008 to make the above-identified application special for accelerated examination procedure under 37 C.F.R. §1.102(d).

The petition to make the application special is GRANTED.

The application is eligible for accelerated examination and the petition complies with the conditions for granting the application special status pursuant to the "Change to Practice for Petitions in Patent Applications to Make Special and for Accelerated Examination" published June 26, 2006, in the Federal Register. (71 Fed. Reg. 36323).

The prosecution of the instant application will be conducted expeditiously according to the following guidelines.

1. The application will be docketed to an examiner and taken up for action within two weeks of the date of this decision.

2. Restriction Practice:
   If the examiner determines that the claims are not directed to a single invention, a telephone request to elect one single invention will be made pursuant to MPEP 812.01. As a prerequisite to the grant of this petition, the applicant has agreed to make an oral election, by telephone, without traverse. If the applicant refuses to make an election without traverse, or the examiner cannot reach the applicant after a reasonable effort, the examiner will treat the first claimed invention (invention defined by claim 1) as having being constructively elected without traverse for examination.

3. Office action:
   If it is determined that, after appropriate consultation, there is a potential rejection or any

other issue to be addressed, the examiner will telephone the applicant and arrange an interview to discuss and resolve the issue. An Office action, other than a Notice of Allowance and Fee(s) Due (Notice of Allowance), will not be issued unless either: 1) an interview was conducted but did not result in agreed to action that places the application in condition for allowance, or, 2) a determination is made that an interview would be unlikely to result in the application being placed in condition for allowance, and 3) an internal conference has been held to review any rejection of any claim.

4. Time for Reply:
An Office action other than a Notice of Allowance or a final Office action will set a shortened statutory period of one month or thirty days, whichever is longer, for reply with no extension of time available under 37 C.F.R. §1.136(a). Failure to timely file a reply within this non-extendible period for reply will result in the abandonment of the application.

5. Reply by Applicant:
A timely reply to an Office action other than the Notice of Allowance must be submitted electronically via EFS or EFS-web and limited to addressing the rejections, objections and requirement made. Any amendment that attempts to: 1) add claims which would result in more than three pending independent claims or more than twenty pending total claims; 2) present claims not encompassed by the pre-examination search or an updated accelerated examination support document; or 3) present claims that are directed a non-elected invention or an invention other than that previously claimed and examined in the application, will be treated as not fully responsive and will not be entered.

For any amendment to the claims (including any new claim) that is not encompassed by the accelerated examination support document, applicant must provide an updated accelerated examination support document that encompasses the amended or new claims at the time of filing of the amendment.

To proceed expeditiously with the examination, it is recommended that a reply with amendments made to any claim or with any new claim being added be accompanied by an updated accelerated examination support document or a statement explaining how the amended or new claim is supported by the original accelerated examination support document.

6. Information Disclosure Statement (IDS):
Any IDS filed during prosecution must be submitted electronically via EFS or EFS-web, accompanied by an updated accelerated examination support document, and be in compliance with 37 C.F.R. §1.97 and §1.98. mpliance with 37 C.F.R. §1.97 and §1.98.

7. Post-Allowance Processing:
To expedite processing of the allowed application into a patent, the applicant must: 1) pay the required fees within one month of the date of the Notice of Allowance, and 2) not

file any post allowance papers not required by the Office. In no event may the issue fee be paid and accepted later than three months from the date of the Notice of Allowance.

8. After-Final and Appeal Procedures:
   To expedite prosecution, after receiving the final Office action, applicant must: 1) promptly file a notice of appeal, an appeal brief and appeal fees; and 2) not request a pre-appeal brief conference.

   Any amendment, affidavit or other evidence filed after final Office action must comply with applicable rules and the requirements outlined in numbered paragraphs 5 and 6 above.

   On appeal, the application will proceed according to normal appeal procedures. After appeal, the application will again be treated special.

9. Proceedings Outside the Normal Examination Process:
   If the application becomes involved in a proceeding that is outside the normal examination process (e.g., a secrecy order, national security review, interference proceeding, petitions under 37 C.F.R. §1.181, §1.182 or §1.183), the application will be treated special before and after such proceeding.

10. Final Disposition:
    The twelve-month goal of this accelerated examination procedure ends with a final disposition. The mailing of a final Office action, a Notice of Allowance, the filing of a Notice of Appeal, or the filing of a Request for Continued Examination (RCE) is the final disposition.

If, during prosecution, a paper is not filed electronically using EFS-web, a reply is filed but is not fully responsive, the application is involved in an appeal, or a proceeding outside normal examination process, the application will still be examined expeditiously, however, the final disposition may occur more than twelve months from the filing of the application.

Any inquiry regarding this decision should be directed to the undersigned at (571) 272-1638.

Edward Westin

Edward Westin, Quality Assurance Specialist
Technology Center 2800
Semiconductors, Electrical and Optical
Systems and Components

UNITED STATES PATENT AND TRADEMARK OFFICE

Commissioner for Patents
United States Patent and Trademark Office
P.O. Box 1450
Alexandria, VA 22313-1450
www.uspto.gov

MIRICK, O'CONNELL, DEMALLIE & LOUGEE, LLP
1700 West Park Drive
Westborough, MA 01581

COPY MAILED

DEC 3 1 2009

OFFICE OF PETITIONS

In re Application of	:	
John P. Flaherty, et al.	:	
Application No. 12/115,595	:	DECISION ON PETITION
Filed: May 6, 2008	:	TO WITHDRAW
Attorney Docket No. 766P001	:	FROM RECORD
	:	

This is a decision on the Request to Withdraw as attorney or agent of record under 37 C.F.R. § 1.36(b), filed October 30, 2009.

The request is **NOT APPROVED** because it is moot.

A review of the file record indicates that the power of attorney to Mirick, O'Connell, DeMallie & Lougee, LLP has been revoked by the applicant of the patent application on December 24, 2009. Accordingly, the request to withdraw under 37 C.F.R. § 1.36(b) is moot.

All future communications from the Office will continue to be directed to the below-listed address until otherwise notified by applicant.

Telephone inquires concerning this decision should be directed to Terri Johnson at 571-272-2991.

Terri Johnson
Petitions Examiner
Office of Petitions

cc: **NIELDS, LEMACK & FRAME, LLC**
176 E. Main Street
Suite #5
Westborough, MA 01581

UNITED STATES PATENT AND TRADEMARK OFFICE

UNITED STATES DEPARTMENT OF COMMERCE
United States Patent and Trademark Office
Address: COMMISSIONER FOR PATENTS
P.O. Box 1450
Alexandria, Virginia 22313-1450
www.uspto.gov

Tyco Healthcare Group LP
60 MIDDLETOWN AVENUE
NORTH HAVEN, CT 06473

Mail Date: 04/21/2010

Applicant	: Csaba L. Rethy	: DECISION ON REQUEST FOR
Patent Number	: 7631794	: RECALCULATION of PATENT
Issue Date	: 12/15/2009	: TERM ADJUSTMENT IN VIEW
Appliction No	: 12/115,612	: OF WYETH AND NOTICE OF INTENT TO
Filed	: 05/06/2008	: ISSUE CERTIFICATE OF CORRECTION
		:

The Request for Recalculation is **GRANTED** to the extent indicated.

The patent term adjustment has been determined to be **0** days. The USPTO will *sua sponte* issue a certificate of correction reflecting the amount of PTA days determined by the recalculation.

Prior to the issuance of the certificate of correction, the USPTO will afford patentee an opportunity to be heard and request reconsideration. Accordingly, patentee has **one month or thirty (30) days**, whichever is longer, to file a request for reconsideration of this patent term adjustment calculation. See 35 U.S.C. 154(b)(3)(B)(ii) and 37 CFR 1.322(a)(4). No extensions of time will be granted under 37 CFR 1.136.

Patentee should use document code PET.OP if electronically filing a request for reconsideration of this patent term adjustment calculation. The patentee must also include the information required by 37 CFR 1.705(b)(2) and the fee required by 37 CFR 1.18(e). If patentee does not file a timely request for reconsideration of this patent term adjustment calculation including the information required by 37 CFR 1.705(b)(2) and the fee required by 37 CFR 1.18(e), the USPTO will issue a certificate of correction reflecting the PTA determination noted above.

Patentee should be aware that in order to preserve the right to review in the United States District Court for the District of Columbia of the USPTO patent term adjustment determination, patentee must ensure that he or she also take the steps required under 35 U.S.C. 154(b)(4)(A) in a timely manner. Nothing in the request for recalculation should be construed as providing an alternative time frame for commencing a civil action under 35 U.S.C. 154(b)(4)(A).

Any questions concerning this decision should be directed to the Office of Patent Legal Administration at 571-272-7702.

UNITED STATES PATENT AND TRADEMARK OFFICE

Commissioner for Patents
United States Patent and Trademark Office
P.O. Box 1450
Alexandria, VA 22313-1450
www.uspto.gov

CANTOR COLBURN LLP - IBM AUSTIN
20 Church Street
22nd Floor
Hartford CT 06103

MAIL
JUL 09 2008
DIRECTOR'S OFFICE
TECHNOLOGY CENTER 2600

In re Application of:
Abernethy et al
Serial No.: 12/115,697
Filed: May 06, 2008
Attorney Docket number: AUS920080014US1
Title: **METHOD FOR CLOSED CAPTIONING OF AUDIO VIDEO CONTENT ON A PORTABLE PLAYBACK DEVICE**

DECISION ON PETITION TO MAKE SPECIAL FOR NEW APPLICATION UNDER 37 C.F.R. § 1.102 & M.P.E.P. § 708.02

This is a decision on the petition filed on May 6, 2008 to make the above-identified application special for accelerated examination procedure under 37 C.F.R. § 1.102(d).

The petition to make the application special is **DISMISSED**.

REGULATION AND PRACTICE

A grantable petition to make special under 37 C.F.R. § 1.102(d) and pursuant to the "Change to Practice for Petitions in Patent Applications to Make Special and for Accelerated Examination" published in the Federal Register on June 26, 2006 (71 Fed. Reg. 36323), must satisfy the following conditions:

I. Conditions Regarding the Application:

1. the application must be a non-reissue utility or design application filed under 37 CFR 1.111(a);

2. the application, the petition and the required fees must be filed electronically using the USPTO's electronic filing system (EFS), or EFS-web; if not filed electronically, a statement asserting that EFS and EFS-web were not available during the normal business hours.

3. at the time of filing, the application must be complete under 37 CFR 1.51 and in condition for examination;

4. the application must contain three or fewer independent claims and twenty or fewer total claims and the claims must be directed to a single invention.

II. Conditions Regarding the Petition:

The petition must:

1. be filed with the application;

2. include a statement that applicant agrees not to separately argue the patentability of any independent claim during any appeal in the application;

3. include a statement that applicant agrees to make an election without traverse in a telephone interview.

4. include a statement that applicant agrees to conduct such an interview when requested by the examiner.

5. include a statement, made based on a good faith belief, that a preexamination search in compliance with the following requirements, was conducted, including an identification of the filed of search by United States class and subclass, where applicable, and for database searches, the search logic or chemical structure or sequence used as a query, the name of the file(s) searched and the database service, and the date of the search.

The preexamination search must:

5.1 involve U.S. patents and patent application publications, foreign patent documents, and non-patent literature, unless the applicant can justify with reasonable certainty that no references more pertinent than those already identified are likely to be found in the eliminated sources and includes such a justification with this statement;

5.2. be directed to the claimed invention and encompass all of the features of the claims, giving the claims the broadest reasonable interpretation;

5.3. encompass the disclosed features that may be claimed.

6. must provide in support of the petition an accelerated examination support document. An accelerated examination support document must include:

6.1. an information disclosure statement (IDS) in compliance with 37 CFR 1.98 citing each reference deemed most closely related to the subject matter of each of the claims;

6.2. an identification of all the limitations in the claims that are disclosed by the reference specifying where the limitation is disclosed in the cited reference;

6.3. a detailed explanation of how each of the claims are patentable over the references cited with particularity required by 37 CFR 1.111(b) and (c);

6.4. a concise statement of the utility of the invention as defined in each of the independent claims (unless the application is a design application);

6.5. a showing of where each limitation of the claims finds support under 35 USC 112, first paragraph, in the written description of the specification. If applicable, the showing must also identify: (1) each means- (or step) plus-function claim element that invokes consideration under 35 USC 112, sixth paragraph; and (2) the structure, material, or acts in the specification that corresponds to each means- (or step) plus-function claim element that invokes consideration under 35 USC 112, sixth paragraph; if the application claims the benefit of one or more applications under title 35, United States Code, the showing must also include where each limitation of the claims finds support under 35 USC 112, first paragraph, in each such application in which such supports exists;

6.6. an identification of any cited references that may be disqualified under 35 USC 103(c).

REVIEW OF FACTS

The conditions set forth under section I. above are considered to have been met. However, the petition fails to comply with conditions set forth under section II. items 5., and 5.1.

Regarding the requirement in item 5 above, the preexamination search document provided with the instant petition is deficient as follows: the search logic appears unduly limiting because it was limited to "cellphone" which is not claimed. It is noted that the Dialog database was not searched.

Furthermore, the search logic should be more detailed using a number of different strings. Other terms need to be used in various combinations, such as:

Storage, memory, buffer and variations of these.

The keyword operators should be modified to include searching in all listed field of search areas.

Please note that any request for reconsideration must include an Information Disclosure Statement citing any newly found relevant prior art and an updated Accelerated Examination Support Document (AESD) meeting all of requirements 6.1 – 6.6 for any documents uncovered by the new search(es) as required above

For these reasons cited above, the petition fails to meet the required conditions to be accorded special status under the accelerated examination procedure.

DECISION

For the above-stated reasons, the petition is **dismissed**. The application will therefore be taken up by the examiner for action in its regular turn.

Petitioner is given a single opportunity to perfect the petition. Any request for reconsideration of this decision must be submitted within 1 (one) month or 30 (thirty) days, whichever is longer, (no extension of time under 37 CFR 1.136(a)) from the date of this decision in order to be considered timely. Any request for reconsideration must address the deficiencies indicated above.

Petitioner is reminded that, upon granting of the special status of the application on request for reconsideration, the application will be processed expeditiously. However, due to the dismissal of the instant petition, examination may not be completed within twelve months of the filing date of the application.

Any inquiry regarding this decision should be directed to Eileen Lillis, Quality Assurance Specialist, at (571) 272-6928.

/Eileen Lillis/

Eileen Lillis
Quality Assurance Specialist
Technology Center 2600

UNITED STATES PATENT AND TRADEMARK OFFICE

Commissioner for Patents
United States Patent and Trademark Office
P.O. Box 1450
Alexandria, VA 22313-1450
www.uspto.gov

MAIL

OCT 16 2008

DIRECTOR'S OFFICE
TECHNOLOGY CENTER 2600

CANTOR COLBURN LLP - IBM FISHKILL
20 Church Street
22nd Floor
Hartford CT 06103

In re Application of:
Abernethy et al.
Serial No.: 12/115,697
Filed: 05/06/2008
Docket: AUS920080014US1
Title: **METHOD FOR CLOSED CAPTIONING OF AUDIO VIDEO CONTENT ON A PORTABLE PLAYBACK DEVICE**

DECISION ON PETITION TO MAKE SPECIAL FOR NEW APPLICATION UNDER 37 C.F.R. § 1.102 & M.P.E.P. § 708.02

This is a decision on the petition filed on May 06, 2008 with a revised AE support document dated 8/11/2008 to make the above-identified application special for accelerated examination procedure under 37 C.F.R. § 1.102(d).

The petition to make the application special is **GRANTED.**

The application is eligible for accelerated examination and the petition complies with the conditions for granting the application special status pursuant to the "Change to Practice for Petitions in Patent Applications to Make Special and for Accelerated Examination" published June 26, 2006, in the Federal Register. (71 Fed. Reg. 36323).

The prosecution of the instant application will be conducted expeditiously according to the following guidelines.

1. The application will be docketed to an examiner and taken up for action within two weeks of the date of this decision.

2. Restriction Practice:
   If the examiner determines that the claims are not directed to a single invention, a telephone request to elect one single invention will be made pursuant to MPEP 812.01. As a prerequisite to the grant of this petition, the applicant has agreed to make an oral election, by telephone, without traverse. If the applicant refuses to make an election without traverse, or the examiner cannot reach the applicant after a reasonable effort, the

examiner will treat the first claimed invention (invention defined by claim 1) as having being constructively elected without traverse for examination.

3. Office action:
   If it is determined that, after appropriate consultation, there is a potential rejection or any other issue to be addressed, the examiner will telephone the applicant and arrange an interview to discuss and resolve the issue. An Office action, other than a Notice of Allowance and Fee(s) Due (Notice of Allowance), will not be issued unless either: 1) an interview was conducted but did not result in agreed to action that places the application in condition for allowance, or, 2) a determination is made that an interview would be unlikely to result in the application being placed in condition for allowance, and 3) an internal conference has been held to review any rejection of any claim.

4. Time for Reply:
   An Office action other than a Notice of Allowance or a final Office action will set a shortened statutory period of one month or thirty days, whichever is longer, for reply with no extension of time available under 37 CFR 1.136(a). Failure to timely file a reply within this non-extendible period for reply will result in the abandonment of the application.

5. Reply by Applicant:
   A timely reply to an Office action other than the Notice of Allowance must be submitted electronically via EFS or EFS-web and limited to addressing the rejections, objections and requirement made. Any amendment that attempts to: 1) add claims which would result in more than three pending independent claims or more than twenty pending total claims; 2) present claims not encompassed by the pre-examination search or an updated accelerated examination support document; or 3) present claims that are directed a non-elected invention or an invention other than that previously claimed and examined in the application, will be treated as not fully responsive and will not be entered.

   For any amendment to the claims (including any new claim) that is not encompassed by the accelerated examination support document, applicant must provide an updated accelerated examination support document that encompasses the amended or new claims at the time of filing of the amendment.

   To proceed expeditiously with the examination, it is recommended that a reply with amendments made to any claim or with any new claim being added be accompanied by an updated accelerated examination support document or a statement explaining how the amended or new claim is supported by the original accelerated examination support document.

6. Information Disclosure Statement (IDS):
   Any IDS filed during prosecution must be submitted electronically via EFS or EFS-web, accompanied by an updated accelerated examination support document, and be in compliance with 37 CFR 1.97 and 1.98.

7. Post-Allowance Processing:
   To expedite processing of the allowed application into a patent, the applicant must: 1) pay the required fees within one month of the date of the Notice of Allowance, and 2) not file any post allowance papers not required by the Office. In no event may the issue fee be paid and accepted later than three months from the date of the Notice of Allowance.

8. After-Final and Appeal Procedures:
   To expedite prosecution, after receiving the final Office action, applicant must: 1) promptly file a notice of appeal, an appeal brief and appeal fees; and 2) not request a pre-appeal brief conference.

   Any amendment, affidavit or other evidence filed after final Office action must comply with applicable rules and the requirements outlined in numbered paragraphs 5 and 6 above.

   On appeal, the application will proceed according to normal appeal procedures. After appeal, the application will again be treated special.

9. Proceedings Outside the Normal Examination Process:
   If the application becomes involved in a proceeding that is outside the normal examination process (e.g., a secrecy order, national security review, interference proceeding, petitions under 37 CFR 1.181, 182 or 183), the application will be treated special before and after such proceeding.

10. Final Disposition:
    The twelve month goal of this accelerated examination procedure ends with a final disposition. The mailing of a final Office action, a Notice of Allowance, the filing of a Notice of Appeal, or the filing of a Request for Continued Examination (RCE) is the final disposition.

If, during prosecution, a paper is not filed electronically using EFS-web, a reply is filed but is not fully responsive, the application is involved in an appeal, or a proceeding outside normal examination process, the application will still be examined expeditiously, however, the final disposition may occur more than twelve months from the filing of the application.

Any inquiry regarding this decision should be directed to Kenneth Wieder, Special Program Examiner, at (571) 272-2986.

Kenneth A. Wieder,
Quality Assurance Specialist
Technology Center 2600
Communications

UNITED STATES PATENT AND TRADEMARK OFFICE

Commissioner for Patents
United States Patent and Trademark Office
P. O. Box 1450
Alexandria, VA 22313-1450
www.uspto.gov

PEARNE & GORDON LLP
1801 EAST 9TH STREET
SUITE 1200
CLEVELAND, OH 44114-3108

MAILED

JUN 23 2009

OFFICE OF PETITIONS

In re Application of :
Oleg V. Kozyuk :
Application No. 12/115,758 : ON PETITION
Filed: May 6, 2008 :
Attorney Docket No. ARIS-42330US1

This is a decision on the petition, filed June 22, 2009 under 37 CFR 1.313(c)(2) to withdraw the above-identified application from issue after payment of the issue fee.

The petition is **GRANTED**.

The above-identified application is withdrawn from issue for consideration of a submission under 37 CFR 1.114 (request for continued examination). See 37 CFR 1.313(c)(2).

Petitioner is advised that the issue fee paid on October 17, 2008 in the above-identified application cannot be refunded. If, however, the above-identified application is again allowed, petitioner may request that it be applied towards the issue fee required by the new Notice of Allowance.[1]

Telephone inquiries should be directed to Irvin Dingle at (571) 272-3210.

This matter is being referred to Technology Center AU 1621 for processing of the request for continued examination under 37 CFR 1.114 and for consideration of the concurrently filed Information Disclosure Statement and amendment.

/Irvin Dingle/
Irvin Dingle
Petitions Examiner
Office of Petitions

---

[1] The request to apply the issue fee to the new Notice may be satisfied by completing and returning the new Issue Fee Transmittal Form PTOL-85(b), which includes the following language thereon: Commissioner for Patents is requested to apply the Issue Fee and Publication Fee (if any) or re-apply any previously paid issue fee to the application identified above. Petitioner is advised that, whether a fee is indicated as being due or not, the Issue Fee Transmittal Form **must** be completed and timely submitted to avoid abandonment. Note the language in bold text on the first page of the Notice of Allowance and Fee(s) Due (PTOL-85).

UNITED STATES PATENT AND TRADEMARK OFFICE

Commissioner for Patents
United States Patent and Trademark Office
P.O. Box 1450
Alexandria, VA 22313-1450
www.uspto.gov

MAIL

AUG 08 2008

DIRECTOR'S OFFICE
TECHNOLOGY CENTER 2600

CANTOR COLBURN LLP - IBM AUSTIN
20 Church Street
22nd Floor
Hartford CT 06103

In re Application of:
KULVIR S BHOGAL et al
Serial No.: 12/115781
Filed: May 6, 2008
Attorney Docket number: AUS920080062US1
Title: **METHOD FOR ENHANCED EVENT SPECIFIC FEATURES ON PERSONAL VIDEO RECORDERS**

DECISION ON PETITION TO MAKE SPECIAL FOR NEW APPLICATION UNDER 37 C.F.R. § 1.102 & M.P.E.P. § 708.02

This is a decision on the petition filed on May 6, 2008 to make the above-identified application special for accelerated examination procedure under 37 C.F.R. § 1.102(d).

The petition to make the application special is **DISMISSED**.

REGULATION AND PRACTICE

A grantable petition to make special under 37 C.F.R. § 1.102(d) and pursuant to the "Change to Practice for Petitions in Patent Applications to Make Special and for Accelerated Examination" published in the Federal Register on June 26, 2006 (71 Fed. Reg. 36323), must satisfy the following conditions:

I. Conditions Regarding the Application:

1. the application must be a non-reissue utility or design application filed under 37 CFR 1.111(a);
2. the application, the petition and the required fees must be filed electronically using the USPTO's electronic filing system (EFS), or EFS-web; if not filed electronically, a statement asserting that EFS and EFS-web were not available during the normal business hours.
3. at the time of filing, the application must be complete under 37 CFR 1.51 and in condition for examination;
4. the application must contain three or fewer independent claims and twenty or fewer total claims and the claims must be directed to a single invention.

II. Conditions Regarding the Petition:

The petition must:

1. be filed with the application;

2. include a statement that applicant agrees not to separately argue the patentability of any independent claim during any appeal in the application;

3. include a statement that applicant agrees to make an election without traverse in a telephone interview.

4. include a statement that applicant agrees to conduct such an interview when requested by the examiner.

5. include a statement, made based on a good faith belief, that a preexamination search in compliance with the following requirements, was conducted, including an identification of the filed of search by United States class and subclass, where applicable, and for database searches, the search logic or chemical structure or sequence used as a query, the name of the file(s) searched and the database service, and the date of the search.

The preexamination search must:

5.1 involve U.S. patents and patent application publications, foreign patent documents, and non-patent literature, unless the applicant can justify with reasonable certainty that no references more pertinent than those already identified are likely to be found in the eliminated sources and includes such a justification with this statement;

5.2. be directed to the claimed invention and encompass all of the features of the claims, giving the claims the broadest reasonable interpretation;

5.3. encompass the disclosed features that may be claimed.

6. must provide in support of the petition an accelerated examination support document. An accelerated examination support document must include:

6.1. an information disclosure statement (IDS) in compliance with 37 CFR 1.98 citing each reference deemed most closely related to the subject matter of each of the claims;

6.2. an identification of all the limitations in the claims that are disclosed by the reference specifying where the limitation is disclosed in the cited reference;

6.3. a detailed explanation of how each of the claims are patentable over the references cited with particularity required by 37 CFR 1.111(b) and (c);

6.4. a concise statement of the utility of the invention as defined in each of the independent claims (unless the application is a design application);

6.5. a showing of where each limitation of the claims finds support under 35 USC 112, first paragraph, in the written description of the specification. If applicable, the showing must also identify: (1) each means- (or step) plus-function claim element that invokes consideration under 35 USC 112, sixth paragraph; and (2) the structure, material, or acts in the specification that corresponds to each means- (or step) plus-function claim element that invokes consideration under 35 USC 112, sixth paragraph; if the application claims the benefit of one or more applications under title 35, United States Code, the showing must also include where each limitation of the claims finds support under 35 USC 112, first paragraph, in each such application in which such supports exists;

6.6. an identification of any cited references that may be disqualified under 35 USC 103(c).

REVIEW OF FACTS

The conditions set forth under section I. above are considered to have been met. However, the petition fails to comply with conditions set forth under section II, items 5.1.

For these reasons cited above, the petition fails to meet the required conditions to be accorded special status under the accelerated examination procedure.

Regarding the requirement in item 5.1 above, the preexamination search document provided with the instant petition is deficient as follows: The search was too narrow. Search should have additionally included Class/subclass:

725/58, 139;
715/718;
348/564; and
386/46

Also, the search logic should be more detailed using terms in the claims, generic terms and synonyms. Other terms need to be used in various combinations, such as:

"presentation", "event", and "record".

If any request for reconsideration is filed, an updated preexamination search must be conducted as per item 5.1 above, and the Preexamination Search Document must be amended to indicate such; a new Information Disclosure Statement should be filed to cite any newly found prior art, and the Accelerated Examination Support Document must also be amended to include the necessary reference and discussion of any newly found and cited prior art in accordance with all of items 6 through 6.6 above.

For the reason cited above, the petition fails to meet the required conditions to be accorded special status under the accelerated examination procedure.

DECISION

For the above-stated reasons, the petition is **dismissed**. The application will therefore be taken up by the examiner for action in its regular turn.

Petitioner is given a single opportunity to perfect the petition. Any request for reconsideration of this decision must be submitted within 1 (one) month or 30 (thirty) days, whichever is longer, (no extension of time under 37 CFR 1.136(a)) from the date of this decision in order to be considered timely. Any request for reconsideration must address the deficiencies indicated above.

Petitioner is reminded that, upon granting of the special status of the application on request for reconsideration, the application will be processed expeditiously. However, due to the dismissal of the instant petition, examination may not be completed within twelve months of the filing date of the application.

Any inquiry regarding this decision should be directed to Eileen Lillis, Quality Assurance Specialist, at (571) 272-6928.

/Eileen Lillis/

Eileen Lillis
Quality Assurance Specialist
Technology Center 2600

Applicant:	Kulvir S. Bhogal et al.
Attorney Docket No.:	AUS920080062US1
Serial No.:	12/115,781
For:	METHOD FOR ENHANCED SPECIFIC FEATURES ON PERSONAL VIDEO RECORDERS
Filed:	May 6, 2008
Technology Center:	2600

Request for Reconsideration of Petition to Make Special

Commissioner for Patents
P.O. Box 1450
Alexandria, VA 22313-1450

Dear Sir:

In response to the dismissed petition to enter accelerated examination, mailed from the Director's Office on August 8, 2008, Applicant requests reconsideration of the petition filed on May 6, 2008. Filed herewith on September 4, 2008 is an amended pre-examination search document that addresses all points identified in the initial petition dismissal.

It is respectfully submitted that Applicant has clearly met the burden necessary to enter the Accelerated Examination program, and that this petition is now in condition for acceptance. If any points remain to be resolved, the undersigned agent for the Applicant can be contacted for a telephonic discussion. If there are any other fees due in connection with this response, please charge the required amount to Deposit Account No. 09-0447 maintained by Applicants' attorney.

Respectfully Submitted,

/S. Marc Balban/

S. Marc Balban, Reg. No. 52586
Cantor Colburn LLP

20 Church Street, 22nd Floor
Hartford, CT 06103
September 4, 2008

UNITED STATES PATENT AND TRADEMARK OFFICE

Commissioner for Patents
United States Patent and Trademark Office
P.O. Box 1450
Alexandria, VA 22313-1450
www.uspto.gov

CANTOR COLBURN LLP - IBM AUSTIN
20 Church Street
22nd Floor
Hartford CT 06103

MAIL

SEP 23 2008

DIRECTOR'S OFFICE
TECHNOLOGY CENTER 2600

In re Application of:
BHOGAL, KULVIR S., et al.
Serial No.: 12/115,781
Filed: May 6, 2008

Title: **METHOD FOR ENHANCED EVENT SPECIFIC FEATURES ON PERSONAL VIDEO RECORDERS**

DECISION ON PETITION TO MAKE SPECIAL FOR NEW APPLICATION UNDER 37 C.F.R. § 1.102 & M.P.E.P. § 708.02

This is a decision on the petition filed on September 4, 2008 requesting reconsideration that the above-identified application be made special for accelerated examination procedure under 37 C.F.R. § 1.102(d).

The petition to make the application special is **GRANTED**.

The application is eligible for accelerated examination and the petition complies with the conditions for granting the application special status pursuant to the "Change to Practice for Petitions in Patent Applications to Make Special and for Accelerated Examination" published June 26, 2006, in the Federal Register. (71 Fed. Reg. 36323).

The prosecution of the instant application will be conducted expeditiously according to the following guidelines.

1. The application will be docketed to an examiner and taken up for action within two weeks of the date of this decision.

2. Restriction Practice:
   If the examiner determines that the claims are not directed to a single invention, a telephone request to elect one single invention will be made pursuant to MPEP 812.01. As a prerequisite to the grant of this petition, the applicant has agreed to make an oral election, by telephone, without traverse. If the applicant refuses to make an election

without traverse, or the examiner cannot reach the applicant after a reasonable effort, the examiner will treat the first claimed invention (invention defined by claim 1) as having being constructively elected without traverse for examination.

3. Office action:
If it is determined that, after appropriate consultation, there is a potential rejection or any other issue to be addressed, the examiner will telephone the applicant and arrange an interview to discuss and resolve the issue. An Office action, other than a Notice of Allowance and Fee(s) Due (Notice of Allowance), will not be issued unless either: 1) an interview was conducted but did not result in agreed to action that places the application in condition for allowance, or, 2) a determination is made that an interview would be unlikely to result in the application being placed in condition for allowance, and 3) an internal conference has been held to review any rejection of any claim.

4. Time for Reply:
An Office action other than a Notice of Allowance or a final Office action will set a shortened statutory period of one month or thirty days, whichever is longer, for reply with no extension of time available under 37 CFR 1.136(a). Failure to timely file a reply within this non-extendible period for reply will result in the abandonment of the application.

5. Reply by Applicant:
A timely reply to an Office action other than the Notice of Allowance must be submitted electronically via EFS or EFS-web and limited to addressing the rejections, objections and requirement made. Any amendment that attempts to: 1) add claims which would result in more than three pending independent claims or more than twenty pending total claims; 2) present claims not encompassed by the pre-examination search or an updated accelerated examination support document; or 3) present claims that are directed a non-elected invention or an invention other than that previously claimed and examined in the application, will be treated as not fully responsive and will not be entered.

   For any amendment to the claims (including any new claim) that is not encompassed by the accelerated examination support document, applicant must provide an updated accelerated examination support document that encompasses the amended or new claims at the time of filing of the amendment.

   To proceed expeditiously with the examination, it is recommended that a reply with amendments made to any claim or with any new claim being added be accompanied by an updated accelerated examination support document or a statement explaining how the amended or new claim is supported by the original accelerated examination support document.

6. Information Disclosure Statement (IDS):
Any IDS filed during prosecution must be submitted electronically via EFS or EFS-web, accompanied by an updated accelerated examination support document, and be in compliance with 37 CFR 1.97 and 1.98.

7. Post-Allowance Processing:
   To expedite processing of the allowed application into a patent, the applicant must: 1) pay the required fees within one month of the date of the Notice of Allowance, and 2) not file any post allowance papers not required by the Office. In no event may the issue fee be paid and accepted later than three months from the date of the Notice of Allowance.

8. After-Final and Appeal Procedures:
   To expedite prosecution, after receiving the final Office action, applicant must: 1) promptly file a notice of appeal, an appeal brief and appeal fees; and 2) not request a pre-appeal brief conference.

   Any amendment, affidavit or other evidence filed after final Office action must comply with applicable rules and the requirements outlined in numbered paragraphs 5 and 6 above.

   On appeal, the application will proceed according to normal appeal procedures. After appeal, the application will again be treated special.

9. Proceedings Outside the Normal Examination Process:
   If the application becomes involved in a proceeding that is outside the normal examination process (e.g., a secrecy order, national security review, interference proceeding, petitions under 37 CFR 1.181, 182 or 183), the application will be treated special before and after such proceeding.

10. Final Disposition:
    The twelve month goal of this accelerated examination procedure ends with a final disposition. The mailing of a final Office action, a Notice of Allowance, the filing of a Notice of Appeal, or the filing of a Request for Continued Examination (RCE) is the final disposition.

If, during prosecution, a paper is not filed electronically using EFS-web, a reply is filed but is not fully responsive, the application is involved in an appeal, or a proceeding outside normal examination process, the application will still be examined expeditiously, however, the final disposition may occur more than twelve months from the filing of the application.

Any inquiry regarding this decision should be directed to Ken Wieder, Quality Assurance Specialist, at (571) 272-2986.

Kenneth A. Wieder
Quality Assurance Specialist
Technology Center 2600
Communications

SPE RESPONSE FOR CERTIFICATE OF CORRECTION

Paper No.: _____

DATE : 02/18/10

TO SPE OF : ART UNIT 2833

SUBJECT : Request for Certificate of Correction for Appl. No.: 12115797 Patent No.: 7608793

Please respond to this request for a certificate of correction within 7 days.

FOR IFW FILES:

Please review the requested changes/corrections as shown in the **COCIN** document(s) in the IFW application image. No new matter should be introduced, nor should the scope or meaning of the claims be changed.

Please complete the response (see below) and forward the completed response to scanning using document code **COCX**.

FOR PAPER FILES:

Please review the requested changes/corrections as shown in the attached certificate of correction. Please complete this form (see below) and forward it with the file to:

Certificates of Correction Branch (C of C)
Randolph Square 9D40-D
Palm Location 7580

You can fax the Directors/SPE response to 571-270-9990

Lamonte Newsome

Certificates of Correction Branch

703-756-1574

Thank You For Your Assistance

The request for issuing the above-identified correction(s) is hereby:

Note your decision on the appropriate box.

- ☐ **Approved** — **All** changes apply.
- ☒ **Approved in Part** — Specify below which changes **do not** apply.
- ☐ **Denied** — State the reasons for denial below.

Comments: the change requested for the inventor is not accurate - it should be "James D. Marshall, Mallorytown, ON (CA)"

the change requested for the date is correct

/renee s luebke/ AU 2833

SPE **Art Unit**

SPE RESPONSE FOR CERTIFICATE OF CORRECTION

SPE RESPONSE FOR CERTIFICATE OF CORRECTION

Paper No.: _____

DATE : 05/14/10

TO SPE OF : ART UNIT 2833

SUBJECT : Request for Certificate of Correction for Appl. No.: 12115797 Patent No.: 7608793

Please respond to this request for a certificate of correction within 7 days.

FOR IFW FILES:

Please review the requested changes/corrections as shown in the **COCIN** document(s) in the IFW application image. No new matter should be introduced, nor should the scope or meaning of the claims be changed.

Please complete the response (see below) and forward the completed response to scanning using document code **COCX**.

FOR PAPER FILES:

Please review the requested changes/corrections as shown in the attached certificate of correction. Please complete this form (see below) and forward it with the file to:

Certificates of Correction Branch (C of C)
Randolph Square 9D40-D
Palm Location 7580

You can fax the Directors/SPE response to 571-270-9990

Lamonte Newsome

Certificates of Correction Branch

703-756-1574

Thank You For Your Assistance

The request for issuing the above-identified correction(s) is hereby:

Note your decision on the appropriate box.

- [X] **Approved** — **All** changes apply.
- [ ] **Approved in Part** — Specify below which changes **do not** apply.
- [ ] **Denied** — State the reasons for denial below.

Comments: _____

/renee s luebke/ — **SPE**

2833 — **Art Unit**

UNITED STATES PATENT AND TRADEMARK OFFICE

Commissioner for Patents
United States Patent and Trademark Office
P.O. Box 1450
Alexandria, VA 22313-1450
www.uspto.gov

BAKER & MCKENZIE LLP
1114 AVENUE OF THE AMERICAS
NEW YORK NY 10036

COPY MAILED

OCT 01 2008

OFFICE OF PETITIONS

In re Application of Su, et al. Application No. 12/115,830 Filed: May 6, 2008 Attorney Docket No. 56197200-500/P1796	: : : : :	DECISION ACCORDING STATUS UNDER 37 CFR 1.47(a)

This is in response to the petition under 37 CFR 1.47(a), filed September 22, 2008.

The petition under 37 CFR 1.47(a) is **GRANTED**.

On petition, petitioner has established that inventors Verma and Andrews have refused to sign the application papers. Specifically, petitioner has attested that copies of the application papers were fowarded to Verma and Andrews on May 13, 2008 and July 21, 2008 respectively, but as of the mail date of this decision, no executed declaration from either inventor has been received. Petitioner has included copies of the transmittal letters, transmitting the application papers, as well as Certified Mail Receipts, showing that the deliveries were signed for by Verma and Andrews.

The above-identified application and papers have been reviewed and found to be in compliance with 37 CFR 1.47(a). Accordingly, the above-identified application is hereby accorded Rule 1.47(a) status. As provided in 37 CFR 1.47(c), this Office will forward notice of this application's filing to the non-signing inventor at the last known address provided on the declaration. Notice of the filing of this application will also be published in the Official Gazette.

While petitioner has not included a statement of the last known address of Verman and Andrews, their last known addresses are presumed to be the addresses listed on the declaration. Petitioner should notify the Office if this is not correct.

The matter is being forwarded to the Office of Patent Application Processing for pre-examination.

Telephone inquiries related to this decision may be directed to the undersigned at (571)272-3207.

Cliff Congo
Petitions Attorney
Office of Petitions

UNITED STATES PATENT AND TRADEMARK OFFICE

Commissioner for Patents
United States Patent and Trademark Office
P.O. Box 1450
Alexandria, VA 22313-1450
www.uspto.gov

GAURAV VERMA
355 N WOLFE RD
APT 326
SUNNYVALE CA 94085

COPY MAILED

OCT 01 2008

OFFICE OF PETITIONS

In re Application of
Su, et al.
Application No. 12/115,830
Filed: May 6, 2008
Title: Computer Implemented Methods, Systems, and Computer-Readable Media for Determining a Model for Predicting Printability of Recticle Features on a Wafer

LETTER

Dear Mr. Verma:

You are named as a joint inventor in the above-identified United States patent application filed under the provisions of 35 USC 116 (United States Code) and 37 CFR 1.47(a), Rules of Practice in Patent Cases. Should a patent be granted on the application you will be designated therein as a joint inventor.

As a joint inventor, you are entitled to inspect any paper in the file wrapper of the application, order copies of all or any part thereof (at a prepaid cost per 37 CFR 1.19) or make your position of record in the application. Alternatively, you may arrange to do any of the preceding through a registered patent attorney or agent presenting written authorization from you. If you care to join the application, agent of record would presumably assist you. Joining in the application would entail the filing of an appropriate oath or declaration by you pursuant to 37 CFR 1.63.

Telephone inquiries regarding this communication should be directed to Petitions Attorney Cliff Congo at (571)272-3207. Requests for information regarding your application should be directed to the File Information Unit at (703) 308-2733. Information regarding how to pay for and order a copy of the application, or a specific paper in the application, should be directed to the Certification Division at (703) 308-9726 or 1-800-972-6382 (outside the Washington D.C. area).

Cliff Congo
Petitions Attorney
Office of Petitions

UNITED STATES PATENT AND TRADEMARK OFFICE

Commissioner for Patents
United States Patent and Trademark Office
P.O. Box 1450
Alexandria, VA 22313-1450
www.uspto.gov

COPY MAILED

OCT 01 2008

OFFICE OF PETITIONS

SCOTT ANDREWS
527 WALKER DR
APT 4
MOUNTAIN VIEW CA 94043

In re Application of
Su, et al.
Application No. 12/115,830
Filed: May 6, 2008
Title: Computer Implemented Methods, Systems, and Computer-Readable Media for Determining a Model for Predicting Printability of Recticle Features on a Wafer

LETTER

Dear Mr. Andrews:

You are named as a joint inventor in the above-identified United States patent application filed under the provisions of 35 USC 116 (United States Code) and 37 CFR 1.47(a), Rules of Practice in Patent Cases. Should a patent be granted on the application you will be designated therein as a joint inventor.

As a joint inventor, you are entitled to inspect any paper in the file wrapper of the application, order copies of all or any part thereof (at a prepaid cost per 37 CFR 1.19) or make your position of record in the application. Alternatively, you may arrange to do any of the preceding through a registered patent attorney or agent presenting written authorization from you. If you care to join the application, agent of record would presumably assist you. Joining in the application would entail the filing of an appropriate oath or declaration by you pursuant to 37 CFR 1.63.

Telephone inquiries regarding this communication should be directed to Petitions Attorney Cliff Congo at (571)272-3207. Requests for information regarding your application should be directed to the File Information Unit at (703) 308-2733. Information regarding how to pay for and order a copy of the application, or a specific paper in the application, should be directed to the Certification Division at (703) 308-9726 or 1-800-972-6382 (outside the Washington D.C. area).

Cliff Congo
Petitions Attorney
Office of Petitions

UNITED STATES PATENT AND TRADEMARK OFFICE

Commissioner for Patents
United States Patent and Trademark Office
P.O. Box 1450
Alexandria, VA 22313-1450
www.uspto.gov

THADDIUS J. CARVIS
102 NORTH KING STREET
LEESBURG VA 20176

COPY MAILED

OCT 2 2 2008

OFFICE OF PETITIONS

In re Application of	:	
Kerr et al.	:	
Application No. 12/115,839	:	DECISION ON PETITION
Filed: May 6, 2008	:	
Attorney Docket No. Nonpareil P1001A US	:	

This is in response to the petition under 37 CFR 1.57(a), filed August 13, 2008, requesting that the above-referenced application be accorded a filing date of May 6, 2008. This petition is being treated pursuant to 37 CFR 1.53(e)(2).[1]

The application papers in the above-identified application were deposited on May 6, 2008. However, on June 23, 2008, the Office of Patent Application Processing mailed applicants a Notice of Incomplete Nonprovisional Application (Notice) notifying applicants that the application papers had not been accorded a filing date because the application was deposited without drawings. Additionally, the Notice required an executed oath or declaration and additional claim fees of $1,550.00. On June 30, 2008, petitioner submitted a Power of Attorney and Correspondence Address Indication Form and an executed declaration. Thereafter, on July 9, 2008, the Office mailed a second Notice of Incomplete Nonprovisional Application notifying applicants that the application papers had not been accorded a filing date because the application was deposited without drawings and requiring the payment of additional claim fees in the amount of $1,550.00.

On August 13, 2008, applicants submitted the present petition and the inadvertently omitted drawings (15 sheets), as well as paid a petition fee of $400.00, additional claim fees of $1,550.00, and a surcharge of $130.00. Applicants request that the present application be accorded a filing date of May 6, 2008, and include the inadvertently omitted drawings on the basis that the application as filed contained a prior benefit claim under 37 CFR 1.78.

[1] Any request for review of a notification pursuant to § 1.53(e)(1), or a notification that the original application papers lack a portion of the specification or drawing(s), must be by way of a petition pursuant to § 1.53(e) accompanied by the fee set forth in § 1.17(f). In the absence of a timely (§ 1.181(f)) petition, the filing date of an application in which the applicants were notified of a filing error pursuant to § 1.53(e)(1) will be the date the filing error is corrected.

Applicants' argument and evidence have been considered. However, a review of the application confirms that, as filed, the application contained at least one process claim. MPEP § 601.01(f) provides that:

> It has been USPTO practice to treat an application that contains at least one process or method claim as an application for which a drawing is not necessary for an understanding of the invention under 35 U.S.C. 113 (first sentence).

Thus, pursuant to § 601.01(f), a drawing is not considered essential for a filing date. The instant application is entitled to a filing date without drawings present in the application. Accordingly, the Office should have granted the application a filing date and mailed a Notice of Omitted Items in a Nonprovisional Application instead of a Notice of Incomplete Nonprovisional Application.

As stated in MPEP § 601.01(g) under the section entitled, "Application Entitled to a Filing Date," applicants may submit an amendment to include the inadvertently omitted portion of the drawing(s) pursuant to 37 CFR 1.57(a):

> [i]f an application was filed on or after September 21, 2004, and contains a claim under 37 CFR 1.55 for priority of a prior-filed foreign application, or a claim under 37 CFR 1.78 for the benefit of a prior-filed provisional, nonprovisional, or international application that was present on the filing date of the application, and the omitted portion of the drawing(s) was inadvertently omitted from the application and is completely contained in the prior-filed application[.]

Any amendment requesting entry of the inadvertently omitted drawings must comply with 37 CFR 1.57(a) and 37 CFR 1.121 and will be considered by the examiner. See MPEP § 201.17.

The Office notes that the application as filed contained a claim under 37 CFR 1.78 for the benefit of two prior-filed provisional applications. However, the benefit claim contained in the first sentence of the specification and the Application Data Sheet on filing included a relationship between the prior-filed provisional applications and the present nonprovisional application. Specifically, the first sentence of the specification reads: "This application is a continuation-in-part of two pending US Provisional Patent Applications, namely U. S. Patent Application No. 60/916,328, filed May 7, 2007 and U. S. Patent Application No. 61/030,257, filed February 21, 2008." The Office reminds applicants that a benefit claim that includes a relationship is considered a claim under 35 U.S.C. 120, 121, or 365(c). Nevertheless, applicants can correct the benefit claim during the pendency of the present application by submitting an amendment changing the first sentence of the specification (e.g., "This application claims the benefit of the provisional application, 60/xxx,xxx, filed on 12/01/01"). A petition under 37 CFR 1.78(a)(6) and surcharge are not required to correct the benefit claim because the Office was able to correctly schedule the application for publication with the relationship given.

In view of the above, the petition is **GRANTED** to the extent the present application will be accorded a filing date of May 6, 2008, with no drawings as part of the original disclosure.

The $400.00 petition fee and the $130.00 surcharge are unnecessary and will be refunded to the Deposit Account.

Pursuant to this decision, the application will be referred to Office of Patent Application Processing for:

- **correction of the filing date to May 6, 2008;**
- **for indication in Office records, as appropriate, that "0" sheets of drawings were present on filing, and;**
- **for issuance of a filing receipt.**

Applicants may request entry of the omitted figures by filing an amendment with the examiner prior to the first Office action on the merits. The determination of new matter will be made by the examiner.

Telephone inquiries concerning this matter may be directed to Christina Tartera Donnell, Senior Petitions Attorney, at (571) 272-3211.

Anthony Knight
Supervisor
Office of Petitions

UNITED STATES PATENT AND TRADEMARK OFFICE

Commissioner for Patents
United States Patent and Trademark Office
P.O. Box 1450
Alexandria, VA 22313-1450
www.uspto.gov

TOWNSEND AND TOWNSEND AND CREW, LLP
TWO EMBARCADERO CENTER
EIGHTH FLOOR
SAN FRANCISCO, CA 94111-3834

MAILED

JUN 18 2010

OFFICE OF PETITIONS

In re Application of	:	
Chinn et al.	:	DECISION ON PETITION
Application No. 12/115,874	:	TO WITHDRAW
Filed: May 6, 2008	:	FROM RECORD
Attorney Docket: IST01000110US	:	

This is a decision on the Request to Withdraw as attorney or agent of record under 37 C.F.R. § 1.36(b), filed March 29, 2010.

The request is **NOT APPROVED** because it is moot.

A review of the file record indicates that Townsend and Townsend and Crew, LLP were revoked as power of attorney by the assignee of the patent application on January 4, 2010. Accordingly, the request to withdraw under 37 C.F.R. § 1.36(b) is moot.

All future communications from the Office will continue to be directed to the below-listed address until otherwise notified by applicant.

Telephone inquires concerning this decision should be directed to the undersigned at 571-272-6059.

Alicia Kelley
Petitions Examiner
Office of Petitions

cc: DANIEL L. FLAMM
476 GREEN VIEW DRIVE
WALNUT CREEK, CA 94596-5459

UNITED STATES PATENT AND TRADEMARK OFFICE

Commissioner for Patents
United States Patent and Trademark Office
P.O. Box 1450
Alexandria, VA 22313-1450
www.uspto.gov

TOWNSEND AND TOWNSEND AND CREW, LLP
TWO EMBARCADERO CENTER
EIGHTH FLOOR
SAN FRANCISCO CA 94111-3834

MAILED

JUL 09 2010

OFFICE OF PETITIONS

In re Application of	:	
Chinn et al.	:	DECISION ON PETITION
Application No. 12/115,875	:	TO WITHDRAW
Filed: May 6, 2008	:	FROM RECORD
Attorney Docket No. 027182-000410	:	

This is a decision on the Request to Withdraw as attorney or agent of record under 37 C.F.R. § 1.36(b), filed March 29, 2010.

The request is **APPROVED**.

A grantable request to withdraw as attorney/agent of record must be signed by every attorney/agent seeking to withdraw or contain a clear indication that one attorney is signing on behalf of another/others. The Office will require the practitioner(s) to certify that he, she or they have: (1) given reasonable notice to the client, prior to the expiration of the reply period, which the practitioner(s) intends to withdraw from employment; (2) delivered to the client or a duly authorized representative of the client all papers and property (including funds) to which the client is entitled; and (3) notified the client of any replies that may be due and the time frame within which the client must respond, pursuant to 37 CFR 10.40 (c).

The request was signed by John P. McGroarty on behalf of all attorneys/agents of record who are associated with Customer Number 20350. All attorneys/agents associated with Customer Number 20350 have been withdrawn. Applicant is reminded that there is no attorney of record at this time.

All future correspondence will be directed to the first-named inventor, Jeff Chinn, Ph.D., at the address indicated below.

Telephone inquires concerning this decision should be directed to the undersigned at (571) 272-3206. All other inquires concerning either the examination or status of the application should be directed to the Technology Center.

Liana Walsh
Petitions Examiner
Office of Petitions

cc: JEFF CHINN, PH.D.
INTEGRATED SURFACE TECHNOLOGIES
1455 ADAMS DRIVE, SUITE 1125
MENLO CA 94025

UNITED STATES PATENT AND TRADEMARK OFFICE

Commissioner for Patents
United States Patent and Trademark Office
P.O. Box 1450
Alexandria, VA 22313-1450
www.uspto.gov

OPTIMAL INNOVATIONS, INC.
1001 West 4th St.
Winston-Salem NC 27101

MAILED

JUN 15 2010

OFFICE OF PETITIONS

In re Application of
ROLAND SCHOETTLE
Application No. 12/115,878
Filed: May 6, 2008
Attorney Docket No. **74268/P021US/10703552**

DECISION ON PETITION
TO WITHDRAW
FROM RECORD

This is a decision on the Request to Withdraw as attorney or agent of record under 37 CFR § 1.36(b), filed March 4, 2010.

The request is **NOT APPROVED**.

The request cannot be approved because the assignee "Optimal Technologies, Inc." that is listed in the request has not been made properly of record under 37 CFR 3.71. Therefore, the change of correspondence address is considered improper.

The Office will only accept correspondence address changes to the most current address information provided for the assignee of the entire interest *who properly became of record under 37 CFR 3.71.* 37 CFR 3.71(c) states:

> *An assignee becomes of record either in a national patent application or a reexamination proceeding by filing a statement in compliance with § 3.73(b) that is signed by a party who is authorized to act on behalf of the assignee.*

The assignee must establish its ownership of the patent to the satisfaction of the Director. In this regard, the statement under 37 CFR 3.73(b) must have either: (i) documentary evidence of a chain of title from the original owner to the assignee (*e.g.*, copy of an executed assignment), and a statement affirming that the documentary evidence of the chain of title from the original owner to the assignee was or concurrently is being submitted for recordation pursuant to § 3.11; or (ii) a statement specifying where documentary evidence of a chain of title from the original owner to the assignee is recorded in the assignment records of the Office (*e.g.*, reel and frame number).

All future communications from the Office will continue to be directed to the above-listed address until otherwise notified by applicant.

Telephone inquires concerning this decision should be directed to the undersigned at (571) 272-4584.

/JoAnne Burke/
JoAnne Burke
Petitions Examiner
Office of Petitions

UNITED STATES PATENT AND TRADEMARK OFFICE

Commissioner for Patents
United States Patent and Trademark Office
P.O. Box 1450
Alexandria, VA 22313-1450
www.uspto.gov

FINNEGAN, HENDERSON, FARABOW, GARRETT & DUNNER LLP
901 NEW YORK AVENUE, NW
WASHINGTON DC 20001-4413

MAILED

AUG 3 1 2009

OFFICE OF PETITIONS

In re Application of	:	
Xuming Henry Zeng et al.	:	
Application No. 12/115,917	:	DECISION ON PETITION
Filed: May 6, 2008	:	TO WITHDRAW
Attorney Docket No. 9145.0096-00	:	FROM RECORD
	:	

This is a decision on the Request to Withdraw as attorney or agent of record under 37 CFR § 1.36(b), filed July 16, 2009.

The request is **NOT APPROVED**.

A grantable request to withdraw as attorney/agent of record must be signed by every attorney/agent seeking to withdraw or contain a clear indication that one attorney is signing on behalf of another/others.

The request cannot be approved because the Office no longer accept address changes to a new practitioner/customer number or law firm filed with a request, absent the filing of a power of attorney to the new representative.

All future communications from the Office will continue to be directed to the above-listed address until otherwise notified by applicant.

Telephone inquiries concerning this decision should be directed to JoAnne Burke at 571-272-4584.

JoAnne Burke
Petitions Examiner
Office of Petitions

UNITED STATES PATENT AND TRADEMARK OFFICE

Commissioner for Patents
United States Patent and Trademark Office
P.O. Box 1450
Alexandria, VA 22313-1450
www.uspto.gov

COPY MAILED

NOV 23 2009

OFFICE OF PETITIONS

FINNEGAN, HENDERSON, FARABOW,
GARRETT & DUNNER LLP
901 NEW YORK AVENUE, NW
WASHINGTON DC 20001-4413

In re Application of	:	
Xuming Henry Zeng et al.	:	
Application No. 12/115,917	:	DECISION ON PETITION
Filed: January 15, 2008	:	TO WITHDRAW
Attorney Docket No. 70107.177	:	FROM RECORD

This is a decision on the renewed Request to Withdraw as attorney or agent of record under 37 CFR § 1.36(b), filed October 6, 2009.

The request is **NOT APPROVED** as moot.

A review of the file record indicates that the power of attorney to attorneys/agents associated with Customer Number 22852 has been revoked by the assignee of the patent application on November 12, 2009. Accordingly, the request to withdraw under 37 CFR § 1.36(b) is moot.

It is noted that the assignee's statement under 37 CFR 3.73(b) did not include the language that "[t]he undersigned (whose title is supplied below) is authorized to act on behalf of the assignee". However, the Office has acknowledged and will construe the title "VP, General Counsel" associated with the person who signed the power of attorney as having apparent authority to sign on behalf of the assignee. *See MPEP § 324(V)(A).*

All future communications from the Office will continue to be directed to the below-listed address until otherwise notified by applicant.

Telephone inquires concerning this decision should be directed to JoAnne Burke at 571-272-4584.

JoAnne Burke
Petitions Examiner
Office of Petitions

cc: HAYNES AND BOONE, LLP
IP Section
2323 Victory Avenue
Suite 700
Dallas TX 75219

UNITED STATES PATENT AND TRADEMARK OFFICE

UNITED STATES DEPARTMENT OF COMMERCE
United States Patent and Trademark Office
Address: COMMISSIONER FOR PATENTS
P.O. Box 1450
Alexandria, Virginia 22313-1450
www.uspto.gov

APPLICATION NUMBER	FILING OR 371(C) DATE	FIRST NAMED APPLICANT	ATTY. DOCKET NO./TITLE
12/115,917	05/06/2008	Xuming Henry Zeng	70107.177

CONFIRMATION NO. 5998

POA ACCEPTANCE LETTER

27683
HAYNES AND BOONE, LLP
IP Section
2323 Victory Avenue
Suite 700
Dallas, TX 75219

OC000000038881620

Date Mailed: 11/19/2009

NOTICE OF ACCEPTANCE OF POWER OF ATTORNEY

This is in response to the Power of Attorney filed 11/12/2009.

The Power of Attorney in this application is accepted. Correspondence in this application will be mailed to the above address as provided by 37 CFR 1.33.

/jlburke/

Office of Data Management, Application Assistance Unit (571) 272-4000, or (571) 272-4200, or 1-888-786-0101

UNITED STATES PATENT AND TRADEMARK OFFICE

UNITED STATES DEPARTMENT OF COMMERCE
United States Patent and Trademark Office
Address: COMMISSIONER FOR PATENTS
P.O. Box 1450
Alexandria, Virginia 22313-1450
www.uspto.gov

APPLICATION NUMBER	FILING OR 371(C) DATE	FIRST NAMED APPLICANT	ATTY. DOCKET NO./TITLE
12/115,917	05/06/2008	Xuming Henry Zeng	70107.177

CONFIRMATION NO. 5998

POWER OF ATTORNEY NOTICE

OC000000038881558

22852
FINNEGAN, HENDERSON, FARABOW, GARRETT & DUNNER LLP
901 NEW YORK AVENUE, NW
WASHINGTON, DC 20001-4413

Date Mailed: 11/19/2009

NOTICE REGARDING CHANGE OF POWER OF ATTORNEY

This is in response to the Power of Attorney filed 11/12/2009.

- The Power of Attorney to you in this application has been revoked by the assignee who has intervened as provided by 37 CFR 3.71. Future correspondence will be mailed to the new address of record(37 CFR 1.33).

/jlburke/

Office of Data Management, Application Assistance Unit (571) 272-4000, or (571) 272-4200, or 1-888-786-0101

PTO/SB/130 (03-08)
Approved for use through 05/31/2008. OMB 0651- 0031
U.S. Patent and Trademark Office; U.S. DEPARTMENT OF COMMERCE
Under the Paperwork Reduction Act of 1995, no persons are required to respond to a collection of information unless it contains a valid OMB control number

PETITION TO MAKE SPECIAL BASED ON AGE FOR ADVANCEMENT OF EXAMINATION UNDER 37 CFR 1.102(c)(1)

Application Information

Application Number	12115936	Confirmation Number	6046	Filing Date	2008-05-06
Attorney Docket Number (optional)	EQUAL99setContADAP	Art Unit		Examiner	
First Named Inventor	Kamilo Feher				
Title of Invention	EQUALIZED MODULATION DEMODULATION (MODEM) FORMAT SELECTABLE MULTI ANTENNA SYSYTEM				

Attention: Office of Petitions

An application may be made special for advancement of examination upon filing of a petition showing that the applicant is 65 years of age, or more. No fee is required with such a petition. See 37 CFR 1.102(c)(1) and MPEP 708.02 (IV).

APPLICANT HEREBY PETITIONS TO MAKE SPECIAL FOR ADVANCEMENT OF EXAMINATION IN THIS APPLICATION UNDER 37 CFR 1.102(c)(1) and MPEP 708.02 (IV) ON THE BASIS OF THE APPLICANT'S AGE.

A grantable petition requires one of the following items:
(1) Statement by one named inventor in the application that he/she is 65 years of age, or more; or
(2) Certification by a registered attorney/agent having evidence such as a birth certificate, passport, driver's license, etc. showing one named inventor in the application is 65 years of age, or more.

Name of Inventor who is 65 years of age, or older

Given Name	Middle Name	Family Name	Suffix
Kamilo		Feher	

A signature of the applicant or representative is required in accordance with 37 CFR 1.33 and 10.18.
Please see 37 CFR 1.4(d) for the format of the signature.

Select (1) or (2) :

- (●) (1) I am an inventor in this application and I am 65 years of age, or more.
- ( ) (2) I am an attorney or agent registered to practice before the Patent and Trademark Office, and I certify that I am in possession of evidence, and will retain such in the application file record, showing that the inventor listed above is 65 years of age, or more.

Signature	/Kamilo Feher/	Date (YYYY-MM-DD)	2008-05-06
Name	Kamilo Feher		

PTO/SB/130 (03-08)
Approved for use through 05/31/2008. OMB 0651- 0031
U.S. Patent and Trademark Office; U.S. DEPARTMENT OF COMMERCE
Under the Paperwork Reduction Act of 1995, no persons are required to respond to a collection of information unless it contains a valid OMB control number

Privacy Act Statement

The Privacy Act of 1974 (P.L. 93-579) requires that you be given certain information in connection with your submission of the attached form related to a patent application or patent. Accordingly, pursuant to the requirements of the Act, please be advised that: (1) the general authority for the collection of this information is 35 U.S.C. 2(b)(2); (2) furnishing of the information solicited is voluntary; and (3) the principal purpose for which the information is used by the U.S. Patent and Trademark Office is to process and/or examine your submission related to a patent application or patent. If you do not furnish the requested information, the U.S. Patent and Trademark Office may not be able to process and/or examine your submission, which may result in termination of proceedings or abandonment of the application or expiration of the patent.

The information provided by you in this form will be subject to the following routine uses:

1. The information on this form will be treated confidentially to the extent allowed under the Freedom of Information Act (5 U.S.C. 552) and the Privacy Act (5 U.S.C. 552a). Records from this system of records may be disclosed to the Department of Justice to determine whether the Fr eedom of Information Act requires disclosure of these records.

2. A record from this system of records may be disclosed, as a routine use, in the course of presenting evidence to a court, magistrate, or administrative tribunal, including disclosures to opposing counsel in the course of settlement negotiations.

3. A record in this system of records may be disclosed, as a routine use, to a Member of Congress submitting a request involving an individual, to whom the record pertains, when the individual has requested assistance from the Member with respect to the subject matter of the record.

4. A record in this system of records may be disclosed, as a routine use, to a contractor of the Agency having need for the information in order to perform a contract. Recipients of information shall be required to comply with the requirements of the Privacy Act of 1974, as amended, pursuant to 5 U.S.C. 552a(m).

5. A record related to an International Application filed under the Patent Cooperation Treaty in this system of records may be disclosed, as a routine use, to the International Bureau of the World Intellectual Property Organization, pursuant to the Patent Cooperation Treaty.

6. A record in this system of records may be disclosed, as a routine use, to another federal agency for purposes of National Security review (35 U.S.C. 181) and for review pursuant to the Atomic Energy Act (42 U.S.C. 218(c)).

7. A record from this system of records may be disclosed, as a routine use, to the Administrator, General Services, or his/her designee, during an inspection of records conducted by GSA as part of that agency's responsibility to recommend improvements in records management practices and programs, under authority of 44 U.S.C. 2904 and 2906. Such disclosure shall be made in accordance with the GSA regulations governing inspection of records for this purpose, and any other relevant (i.e., GSA or Commerce) directive. Such disclosure shall not be used to make determinations about indivi duals.

8. A record from this system of records may be disclosed, as a routine use, to the public after either publication of the application pursuant to 35 U.S.C. 122(b) or issuance of a patent pursuant to 35 U.S.C. 151. Further, a record may be disclosed, subject to the limitations of 37 CFR 1.14, as a routine use, to the public if the record was filed in an application which became abandoned or in which the proceedings were terminated and which application is referenced by either a published application, an application open to public inspections or an issued patent.

9. A record from this system of records may be disclosed, as a routine use, to a Federal, State, or local law enforcement agency, if the USPTO becomes aware of a violation or potential violation of law or regulation.

UNITED STATES PATENT AND TRADEMARK OFFICE

Commissioner for Patents
United States Patent and Trademark Office
P.O. Box 1450
Alexandria, VA 22313-1450
www.uspto.gov

In re Application of
Kamilo Feher

Application No. 12115936

Filed:

Attorney Docket No. EQUALads06May08

:DECISION ON PETITION TO MAKE SPECIAL
:UNDER 37 CFR 1.102(c)(1)

This is a decision on the electronic petition under 37 CFR 1.102 (c)(1) ,filed 06-MAY-2008 to make the above-identified application special based on applicant's age as set forth in MPEP § 708.02, Section IV.

The petition is **GRANTED**.

A grantable petition to make an application special under 37 CFR 1.102(c)(1), MPEP § 708.02, Section IV: Applicant's Age must include a statement by applicant or a registered practitioner having evidence that applicant is at least 65 years of age. No fee is required.

Accordingly, the above-identified application has been accorded “special” status and will be taken up for action by the examiner upon the completion of all pre-examination processing.

Telephone inquires concerning this electronic decision should be directed to the Electronic Business Center at 866-217-9197.

All other inquires concerning either the examination or status of the application should be directed to the Technology Center.

UNITED STATES PATENT AND TRADEMARK OFFICE

Commissioner for Patents
United States Patent and Trademark Office
P.O. Box 1450
Alexandria, VA 22313-1450
www.uspto.gov

In re Application of
Payman Zarkesh-Ha

Application No. 12115991

Filed: May 6,2008

Attorney Docket No. 078023.0119 (DSM-0075)

:DECISION ON PETITION TO MAKE SPECIAL
:UNDER 37 CFR 1.102(c)(1)

This is a decision on the electronic petition under 37 CFR 1.102 (c)(1) ,filed 12-JUN-2008 to make the above-identified application special based on applicant's age as set forth in MPEP § 708.02, Section IV.

The petition is **GRANTED**.

A grantable petition to make an application special under 37 CFR 1.102(c)(1), MPEP § 708.02, Section IV: Applicant's Age must include a statement by applicant or a registered practitioner having evidence that applicant is at least 65 years of age. No fee is required.

Accordingly, the above-identified application has been accorded “special” status and will be taken up for action by the examiner upon the completion of all pre-examination processing.

Telephone inquires concerning this electronic decision should be directed to the Electronic Business Center at 866-217-9197.

All other inquires concerning either the examination or status of the application should be directed to the Technology Center.

UNITED STATES PATENT AND TRADEMARK OFFICE

UNITED STATES DEPARTMENT OF COMMERCE
United States Patent and Trademark Office
Address: COMMISSIONER FOR PATENTS
P.O. Box 1450
Alexandria, Virginia 22313-1450
www.uspto.gov

APPLICATION NO.	FILING DATE	FIRST NAMED INVENTOR	ATTORNEY DOCKET NO.	CONFIRMATION NO.
12/115,993	05/06/2008	Manuel TORRES MARTINEZ	GAS-115	6168

7590 08/31/2009

LUCAS & MERCANTI, LLP
475 PARK AVENUE SOUTH
15TH FLOOR
NEW YORK, NY 10016

EXAMINER
WAKS, JOSEPH

ART UNIT	PAPER NUMBER
2839	

NOTIFICATION DATE	DELIVERY MODE
08/31/2009	ELECTRONIC

DECISION GRANTING PETITION UNDER 37 CFR 1.138(d)

The declaration of express abandonment is recognized

This is in response to the petition under 37 CFR 1.138(d), requesting for a refund of any previously paid search fee and excess claims fee in the above-identified application.

The petition is granted.

The express abandonment is recognized. Any previously paid search fee and excess claims fee are hereby refunded.

Telephone inquiries should be directed to the Office of Data Management at (571) 272-4200.

Nioni Farmer

Patent Publication Branch
Office of Data Management

Adjustment date: 08/31/2009 NFARMER
05/07/2008 INTEFSW 00002234 12115993
02 FC:2111 -255.00 OP

Refund Ref:
08/31/2009 0030073855

Credit Card Refund Total: $255.00

Am Exp..: XXXXXXXXXXX2003

FORM PET651G (Rev. 08/07)

UNITED STATES PATENT AND TRADEMARK OFFICE

Commissioner for Patents
United States Patent and Trademark Office
P.O. Box 1450
Alexandria, VA 22313-1450
www.uspto.gov

MAILED

MAR 05 2010

OFFICE OF PETITIONS

FISH & RICHARDSON PC
PO BOX 1022
MINNEAPOLIS MN 55440-1022

In re Application of	:	
Kim, et al.	:	
Application No. 12/116,019	:	ON PETITION
Filed: May 6, 2008	:	
Patent No. 7,490,474	:	
Issued: February 17, 2009		

This is in response to the "PETITION UNDER 37 C.F.R. 1.67 AND 1.182 TO PLACE SUPPLEMENTAL DECLARATION AND SWORN STATEMENT IN FILE", filed November 9, 2009.

The petition is **GRANTED**.

Petitioner's arguments and cited case law have been reviewed and found to be persuasive. The supplemental declaration and sworn statement will be placed into the file.

Telephone inquiries regarding this decision should be directed to the undersigned at (571)272-3207.

Cliff Congo
Petitions Attorney
Office of Petitions

UNITED STATES PATENT AND TRADEMARK OFFICE

Commissioner for Patents
United States Patent and Trademark Office
P.O. Box 1450
Alexandria, VA 22313-1450
www.uspto.gov

MAILED

MAR 05 2010

OFFICE OF PETITIONS

FISH & RICHARDSON PC
PO BOX 1022
MINNEAPOLIS MN 55440-1022

In re Application of	:	
Kim, et al.	:	
Application No. 12/116,058	:	ON PETITION
Filed: May 6, 2008	:	
Patent No. 7,490,475	:	
Issued: February 17, 2009		

This is in response to the "PETITION UNDER 37 C.F.R. 1.67 AND 1.182 TO PLACE SUPPLEMENTAL DECLARATION AND SWORN STATEMENT IN FILE", filed November 9, 2009.

The petition is **GRANTED**.

Petitioner's arguments and cited case law have been reviewed and found to be persuasive. The supplemental declaration and sworn statement will be placed into the file.

Telephone inquiries regarding this decision should be directed to the undersigned at (571)272-3207.

Cliff Congo
Petitions Attorney
Office of Petitions

UNITED STATES PATENT AND TRADEMARK OFFICE

Commissioner for Patents
United States Patent and Trademark Office
P.O. Box 1450
Alexandria, VA 22313-1450
www.uspto.gov

BRINKS HOFER GILSON & LIONE
P.O. BOX 10395
CHICAGO, IL 60610

COPY MAILED

MAR 0 2 2009

OFFICE OF PETITIONS

In re Application of
GREENWOOD, Simon R. et al.
Application No. 12/116,080
Filed: May 06, 2008
Attorney Docket No. **507098**

DECISION ON PETITION
TO WITHDRAW
FROM RECORD

This is a decision on the Request to Withdraw as attorney or agent of record under 37 C.F.R. § 1.36(b), filed December 19, 2008.

The request is **NOT APPROVED** because it is moot.

A review of the file record indicates that the power of attorney to Brinks Hofer Gilson & Lione has been revoked by the applicants of the patent application on January 12, 2009. Accordingly, the request to withdraw under 37 C.F.R. § 1.36(b) is moot.

All future communications from the Office will continue to be directed to the below-listed address until otherwise notified by applicant.

Telephone inquires concerning this decision should be directed to Michelle R. Eason at 571-272-4231.

Michelle R. Eason
Paralegal Specialist
Office of Petitions

cc: **REINHART BOERNER VAN DEUREN P.C.**
2215 PERRYGREEN WAY
ROCKFORD IL 61107

UNITED STATES PATENT AND TRADEMARK OFFICE

UNITED STATES DEPARTMENT OF COMMERCE
United States Patent and Trademark Office
Address: COMMISSIONER FOR PATENTS
P.O. Box 1450
Alexandria, Virginia 22313-1450
www.uspto.gov

APPLICATION NO.	FILING DATE	FIRST NAMED INVENTOR	ATTORNEY DOCKET NO.	CONFIRMATION NO.
12/116,085	05/06/2008	Harry S. Barowski	DE920080009US1	6364

78571 7590 07/25/2008
Dillon & Yudell LLP
8911 N. Capital of Texas Hwy
Suite 2110
Austin, TX 78759

EXAMINER
LEE, THOMAS C

ART UNIT	PAPER NUMBER
2115	

MAIL DATE	DELIVERY MODE
07/25/2008	PAPER

Please find below and/or attached an Office communication concerning this application or proceeding.

The time period for reply, if any, is set in the attached communication.

UNITED STATES PATENT AND TRADEMARK OFFICE

Commissioner for Patents
United States Patent and Trademark Office
P.O. Box 1450
Alexandria, VA 22313-1450
www.uspto.gov

DILLON & YUDELL LLP
8911 N. CAPITAL OF TEXAS HWY
SUITE 2110
AUSTIN, TX 78759

7/24/08

In re Application of: Barowski, et al. Serial No.: 12/116,085 Filed: May 6, 2008 Docket: DE920080009US1 Title: METHOD FOR REDUCING REGISTER FILE LEAKAGE CURRENT WITHIN A PROCESSOR	DECISION ON PETITION TO MAKE SPECIAL FOR NEW APPLICATION UNDER 37 C.F.R. § 1.102 & M.P.E.P. § 708.02

This is a decision on the petition filed on May 6, 2008 to make the above-identified application special for accelerated examination procedure under 37 C.F.R. § 1.102(d).

The petition to make the application special is **DISMISSED**.

REGULATION AND PRACTICE

A grantable petition to make special under 37 C.F.R. § 1.102(d) and pursuant to the "Change to Practice for Petitions in Patent Applications to Make Special and for Accelerated Examination" published in the Federal Register on June 26, 2006 (71 Fed. Reg. 36323), must satisfy the following conditions:

I. Conditions Regarding the Application:

1. the application must be a non-reissue utility or design application filed under 37 CFR 1.111(a);
2. the application, the petition and the required fees must be filed electronically using the USPTO's electronic filing system (EFS), or EFS-web; if not filed electronically, a statement asserting that EFS and EFS-web were not available during the normal business hours.
3. at the time of filing, the application must be complete under 37 CFR 1.51 and in condition for examination;
4. the application must contain three or fewer independent claims and twenty or fewer total claims and the claims must be directed to a single invention.

II. Conditions Regarding the Petition:

The petition must:

1. be filed with the application;

2. include a statement that applicant agrees that the dependent claims will be grouped together with and not to separately argue the patentability of any independent claim from which they depend during any appeal in the application;

3. include a statement that applicant agrees to make an election without traverse in a telephone interview.

4. include a statement that applicant agrees to conduct such an interview when requested by the examiner.

5. include a statement, made based on a good faith belief, that a preexamination search in compliance with the following requirements, was conducted, including an identification of the field of search by United States class and subclass, where applicable, and for database searches, the search logic or chemical structure or sequence used as a query, the name of the file(s) searched and the database service, and the date of the search.

The preexamination search must:

5.1 involve U.S. patents and patent application publications, foreign patent documents, and non-patent literature, unless the applicant can justify with reasonable certainty that no references more pertinent than those already identified are likely to be found in the eliminated sources and includes such a justification with this statement;

5.2. be directed to the claimed invention and encompass all of the features of the claims, giving the claims the broadest reasonable expectation;

5.3. encompass the disclosed features that may be claimed.

6. must provide in support of the petition an accelerated examination support document. An accelerated examination support document must include:

6.1. an information disclosure statement (IDS) in compliance with 37 CFR 1.98 citing each reference deemed most closely related to the subject matter of each of the claims;

6.2. an identification of all the limitations in the claims that are disclosed by the reference specifying where the limitation is disclosed in the cited reference;

6.3. a detailed explanation of how each of the claims are patentable over the references cited with particularity required by 37 CFR 1.111(b) and (c);

6.4. a concise statement of the utility of the invention as defined in each of the independent claims (unless the application is a design application);

6.5. a showing of where each limitation of the claims finds support under 35 USC 112, first paragraph, in the written description of the specification. If applicable, the showing must also identify: (1) each means- (or step) plus-function claim element that invokes consideration under 35 USC 112, sixth paragraph; and (2) the structure, material, or acts in the specification that corresponds to each means- (or step) plus-function claim element that invokes consideration under 35 USC 112, sixth paragraph; if the application claims the benefit of one or more applications under title 35, United States Code, the showing must also include where each limitation of the claims finds support under 35 USC 112, first paragraph, in each such application in which such supports exists;

6.6. an identification of any cited references that may be disqualified under 35 USC 103(c).

REVIEW OF FACTS

The conditions I. 1 - 4 & II. 1 - 5.3, 6.1, 6.4 - 6.6 above are considered to have been met. However, the petition fails to comply with conditions II. 6.2 and 6.3 above. Therefore, the petition fails to meet the required conditions to be accorded special status under the accelerated examination procedure.

With regard to the requirement of MPEP § 708.02(a)(I.)(I)(2) and item 6.2 above, "(2) For each reference cited, the accelerated examination support document must include an identification of all the limitations in the claims that are disclosed by the reference specifying where the limitation is disclosed in the cited reference." In the instant case, the document fails to provide an identification of *all the limitations in the claims* that are disclosed by the cited references. The document provides an identification of the limitations of **only** Claim 1. No identification of the limitations of claims 2-18 is provided. Correction is required.

In addition, with respect to item 6.2 above, Petitioner should provide a detailed discussion of each current reference(s), identifying subject matter by way of figure, page, paragraph and line numbers, as appropriate, as they pertain to the instant claim limitations of the instant application [**emphasis added**]. In particular, with respect to claim 1, Petitioner does not clearly and accurately point out the particular language that is taught by the references cited to be the "most closely" related, i.e. the "identification of limitations disclosed by the references" analysis (pages 9/15 and 10/15) does not track consistently with the current limitations set forth in the instant claims. For instance, with respect to the discussion regarding the reference to Terechko et al., the reference to "partitioning a register file .... ***having a plurality of physical registers*** ... ***in an instruction set*** of the processor" does not appear to be recited in the pending claims. This representation by Petitioner makes comparison analysis difficult at best.

With regard to the requirement of MPEP § 708.02(a)(I.)(I)(3) and item 6.3 above, "((3)The accelerated examination support document must include a detailed explanation of how each of the claims are patentable over the references cited with the particularity required by 37 CFR 1.111(b) and (c)." In the instant case, the document fails to provide a detailed explanation of how ***each of the claims*** are patentable over the cited references. The document provides a general explanation of how only claim 1 is patentable over the cited references by merely reciting a portion of the claim. However, there is no explanation of patentability with respect to claims 2-18 in the instant petition. Correction is required.

In addition, with respect to item 6.3 above, Petitioner does not clearly point out the particular language with respect to claim 1 that distinguishes i.e. the patentability analysis does not track consistently with the identification of limitations in the claims. For instance, under "Detailed Explanation of Patentability" on pages 10/15 and 11/15 of the instant petition, Petitioner identified the following language as not taught by any of the cited reference: "***moving all register files*** representing .....". However, the language identified above is currently not found in the pending instant claim. This representation by Petitioner makes comparison analysis difficult at best. Correction is required.

Clarification and identification of support for each limitation in the claims is required. Thus, the petition does not meet the conditions II. 6.2 & 6.3 above.

DECISION

For the above-stated reasons, the petition is **DISMISSED**. The application will therefore be taken up by the examiner for action in its regular turn.

Petitioner is given ***a single opportunity*** to perfect the petition. Any request for reconsideration of this decision must be submitted within 1 (one) month or 30 (thirty) days, whichever is longer, (no extension of time under 37 CFR 1.136(a) is permitted) from the date of this decision in order to be considered timely. Any request for reconsideration ***must fully address all of the deficiencies indicated above***. [emphasis added]

Petitioner is reminded that, upon granting of the special status of the application on request for reconsideration, the application will be processed expeditiously. However, due to the dismissal of the instant petition, examination may not be completed within twelve months of the filing date of the application.

Any inquiry regarding this decision should be directed to Brian Johnson, Quality Assurance Specialist, at (571) 272-3595. If attempts to reach the undersigned by telephone are unsuccessful, Kakali Chaki, Quality Assurance Specialist, can be reached at (571) 272-3719.

Brian L. Johnson
Quality Assurance Specialist, WG 2110
Technology Center 2100

UNITED STATES PATENT AND TRADEMARK OFFICE

UNITED STATES DEPARTMENT OF COMMERCE
United States Patent and Trademark Office
Address: COMMISSIONER FOR PATENTS
P.O. Box 1450
Alexandria, Virginia 22313-1450
www.uspto.gov

APPLICATION NO.	FILING DATE	FIRST NAMED INVENTOR	ATTORNEY DOCKET NO.	CONFIRMATION NO.
12/116,085	05/06/2008	Harry S. Barowski	DE920080009US1	6364

78571 7590 10/03/2008
Dillon & Yudell LLP
8911 N. Capital of Texas Hwy
Suite 2110
Austin, TX 78759

EXAMINER
LEE, THOMAS C

ART UNIT	PAPER NUMBER
2115	

MAIL DATE	DELIVERY MODE
10/03/2008	PAPER

Please find below and/or attached an Office communication concerning this application or proceeding.

The time period for reply, if any, is set in the attached communication.

UNITED STATES PATENT AND TRADEMARK OFFICE

Commissioner for Patents
United States Patent and Trademark Office
P.O. Box 1450
Alexandria, VA 22313-1450
www.uspto.gov

10/02/2008

DILLON & YUDELL LLP
8911 N. CAPITOL OF TEXAS HWY
SUITE 2110
AUSTIN, TX 78759

In re Application of: BAROWSKI, et al.
Serial No.: 12/116,085
Filed: May 06, 2008
Docket: DE920080009US1

Title: METHOD FOR REDUCING REGISTER FILE LEAKAGE CURRENT WITHIN A PROCESSOR

DECISION ON PETITION TO MAKE SPECIAL FOR NEW APPLICATION UNDER 37 C.F.R. § 1.102 & M.P.E.P. § 708.02

This is a decision on the renewed petition filed on August 7, 2008 to make the above- identified application special for accelerated examination procedure under 37 C.F.R. § 1.102(d). The original petition, submitted on May 6, 2008 was dismissed in the decision mailed on July 25, 2008.

The petition to make the application special is **GRANTED**.

The application is eligible for accelerated examination and the petition complies with the conditions for granting the application special status pursuant to the "Change to Practice for Petitions in Patent Applications to Make Special and for Accelerated Examination" published June 26, 2006, in the Federal Register. (71 Fed. Reg. 36323).

The prosecution of the instant application will be conducted expeditiously according to the following guidelines.

1. The application will be docketed to an examiner and taken up for action within two weeks of the date of this decision.

2. Restriction Practice:
   If the examiner determines that the claims are not directed to a single invention, a telephone request to elect one single invention will be made pursuant to MPEP 812.01. As a prerequisite to the grant of this petition, the applicant has agreed to make an oral election, by telephone, without traverse. If the applicant refuses to make an election without traverse, or the examiner cannot reach the applicant after a reasonable effort, the

examiner will treat the first claimed invention (invention defined by claim 1) as having being constructively elected without traverse for examination.

3. Office action:
If it is determined that, after appropriate consultation, there is a potential rejection or any other issue to be addressed, the examiner will telephone the applicant and arrange an interview to discuss and resolve the issue. An Office action, other than a Notice of Allowance and Fee(s) Due (Notice of Allowance), will not be issued unless either: 1) an interview was conducted but did not result in agreed to action that places the application in condition for allowance, or, 2) a determination is made that an interview would be unlikely to result in the application being placed in condition for allowance, and 3) an internal conference has been held to review any rejection of any claim.

4. Time for Reply:
An Office action other than a Notice of Allowance or a final Office action will set a shortened statutory period of one month or thirty days, whichever is longer, for reply with no extension of time available under 37 CFR 1.136(a). Failure to timely file a reply within this non-extendible period for reply will result in the abandonment of the application.

5. Reply by Applicant:
A timely reply to an Office action other than the Notice of Allowance must be submitted electronically via EFS or EFS-web and limited to addressing the rejections, objections and requirement made. Any amendment that attempts to: 1) add claims which would result in more than three pending independent claims or more than twenty pending total claims; 2) present claims not encompassed by the pre-examination search or an updated accelerated examination support document; or 3) present claims that are directed a non-elected invention or an invention other than that previously claimed and examined in the application, will be treated as not fully responsive and will not be entered.

   For any amendment to the claims (including any new claim) that is not encompassed by the accelerated examination support document, applicant must provide an updated accelerated examination support document that encompasses the amended or new claims at the time of filing of the amendment.

   To proceed expeditiously with the examination, it is recommended that a reply with amendments made to any claim or with any new claim being added be accompanied by an updated accelerated examination support document or a statement explaining how the amended or new claim is supported by the original accelerated examination support document.

6. Information Disclosure Statement (IDS):
Any IDS filed during prosecution must be submitted electronically via EFS or EFS-web, accompanied by an updated accelerated examination support document, and be in compliance with 37 CFR 1.97 and 1.98.

7. Post-Allowance Processing:
To expedite processing of the allowed application into a patent, the applicant must: 1) pay the required fees within one month of the date of the Notice of Allowance, and 2) not

file any post allowance papers not required by the Office. In no event may the issue fee be paid and accepted later than three months from the date of the Notice of Allowance.

8. After-Final and Appeal Procedures:
   To expedite prosecution, after receiving the final Office action, applicant must: 1) promptly file a notice of appeal, an appeal brief and appeal fees; and 2) not request a pre-appeal brief conference.

   Any amendment, affidavit or other evidence filed after final Office action must comply with applicable rules and the requirements outlined in numbered paragraphs 5 and 6 above.

   On appeal, the application will proceed according to normal appeal procedures. After appeal, the application will again be treated special.

9. Proceedings Outside the Normal Examination Process:
   If the application becomes involved in a proceeding that is outside the normal examination process (e.g., a secrecy order, national security review, interference proceeding, petitions under 37 CFR 1.181, 182 or 183), the application will be treated special before and after such proceeding.

10. Final Disposition:
    The twelve-month goal of this accelerated examination procedure ends with a final disposition. The mailing of a final Office action, a Notice of Allowance, the filing of a Notice of Appeal, or the filing of a Request for Continued Examination (RCE) is the final disposition.

If, during prosecution, a paper is not filed electronically using EFS-web, a reply is filed but is not fully responsive, the application is involved in an appeal, or a proceeding outside normal examination process, the application will still be examined expeditiously, however, the final disposition may occur more than twelve months from the filing of the application. In addition, Applicant is reminded that due to the dismissal of the previous petition submission, examination may not be completed within twelve months of the filing date of the application.

Any inquiry regarding this decision should be directed to Brian Johnson, Quality Assurance Specialist, at (571) 272-3595. If attempts to reach the undersigned by telephone are unsuccessful, Kakali Chaki, Quality Assurance Specialist, can be reached at (571) 272-3719.

Brian Johnson, WQAS 2110
Technology Center 2100
Computer Architecture, Software and Information Security

UNITED STATES PATENT AND TRADEMARK OFFICE

UNITED STATES DEPARTMENT OF COMMERCE
United States Patent and Trademark Office
Address: COMMISSIONER FOR PATENTS
P.O. Box 1450
Alexandria, Virginia 22313-1450
www.uspto.gov

APPLICATION NO.	FILING DATE	FIRST NAMED INVENTOR	ATTORNEY DOCKET NO.	CONFIRMATION NO.
12/116,114	05/06/2008	Matthew G. Goodman	ASMEX.577A	6413

7590 01/14/2010

Knobbe, Martens, Olson & Bear LLP
2040 Main Street
14th Floor
Irvine, CA 92614

EXAMINER
BLAN, NICOLE R

ART UNIT	PAPER NUMBER
1792	

MAIL DATE	DELIVERY MODE
01/14/2010	PAPER

DECISION GRANTING PETITION UNDER 37 CFR 1.138(d)

The declaration of express abandonment is recognized

This is in response to the petition under 37 CFR 1.138(d), requesting for a refund of any previously paid search fee and excess claims fee in the above-identified application.

The petition is granted.

The express abandonment is recognized. Any previously paid search fee and excess claims fee are hereby refunded.

Telephone inquiries should be directed to the Office of Data Management at (571) 272-4200.

Nioni Farmer

Patent Publication Branch
Office of Data Management

Refund Ref:
01/14/2010 [illegible]

Credit Card Refund Total: $1220.00

Master [illegible]

Adjustment date: 01/14/2010 NFARMER
05/07/2008 [illegible] 12116114
02 FC:1111 -510.00 OP
04 FC:1222 -500.00 OP
05 FC:1231 -210.00 OP

FORM PET651G (Rev. 08/07)

UNITED STATES PATENT AND TRADEMARK OFFICE

Commissioner for Patents
United States Patent and Trademark Office
P.O. Box 1450
Alexandria, VA 22313-1450
www.uspto.gov

MAILED

JUL 19 2010

OFFICE OF PETITIONS

MARGER JOHNSON & MCCOLLOM, P.C.
210 SW MORRISON STREET, SUITE 400
PORTLAND OR 97204

In re Application of	:	
Barrie GILBERT	:	
Application No. 12/116,148	:	DECISION ON PETITION
Filed: May 6, 2008	:	
Attorney Docket No. 1482-266	:	

This is a decision on the petition under the unintentional provisions of 37 CFR 1.137(b), filed May 28, 2010, to revive the above-identified application.

The petition is **GRANTED**.

The application became abandoned for failure to timely pay the issue and publication fees on or before May 26, 2010. As required by the Notice of Allowance and Fee(s) Due, mailed February 26, 2010, which set a statutory period for reply of three (3) months. Accordingly, the application became abandoned on May 27, 2010.

The petition satisfies the requirements of 37 CFR 1.137(b) in that petitioner has supplied (1) the reply in the form of payment of the issue fee of $1510 and publication fee of $300; (2) the petition fee of $1620; and (3) and the required statement of unintentional delay.

Telephone inquiries concerning this decision should be directed to the undersigned at (571) 272-6735.

The application is being referred to the Office of Data Management for processing into a patent.

/dcg/
Diane C. Goodwyn
Petitions Examiner
Office of Petitions

UNITED STATES PATENT AND TRADEMARK OFFICE

Commissioner for Patents
United States Patent and Trademark Office
P.O. Box 1450
Alexandria, VA 22313-1450
www.uspto.gov

MAIL

JUL 01 2008

DIRECTOR'S OFFICE
TECHNOLOGY CENTER 2600

Clause Eight Intellectual Property Services
P.O Box 131270
CARLSBAD CA 92013

In re Application of:
NIERENBERG, NICOLAS C., et al.
Serial No.: 12/116,221
Filed: May 7, 2008

Title: **WIRELESS TRACKING SYSTEM AND METHOD UTILIZING TAGS WITH VARIABLE POWER LEVEL TRANSMISSIONS**

DECISION ON PETITION TO MAKE SPECIAL FOR NEW APPLICATION UNDER 37 C.F.R. § 1.102 & M.P.E.P. § 708.02

This is a decision on the petition filed on May 7, 2008, to make the above-identified application special for accelerated examination procedure under 37 C.F.R. § 1.102(d).

The petition to make the application special is **DISMISSED**.

REGULATION AND PRACTICE

A grantable petition to make special under 37 C.F.R. § 1.102(d) and pursuant to the "Change to Practice for Petitions in Patent Applications to Make Special and for Accelerated Examination" published in the Federal Register on June 26, 2006 (71 Fed. Reg. 36323), must satisfy the following conditions:

I. Conditions Regarding the Application:

1. the application must be a non-reissue utility or design application filed under 37 CFR 1.111(a);
2. the application, the petition and the required fees must be filed electronically using the USPTO's electronic filing system (EFS), or EFS-web; if not filed electronically, a statement asserting that EFS and EFS-web were not available during the normal business hours.
3. at the time of filing, the application must be complete under 37 CFR 1.51 and in condition for examination;
4. the application must contain three or fewer independent claims and twenty or fewer total claims and the claims must be directed to a single invention.

II. Conditions Regarding the Petition:

The petition must:

1. be filed with the application;

2. include a statement that applicant agrees not to separately argue the patentability of any independent claim during any appeal in the application;

3. include a statement that applicant agrees to make an election without traverse in a telephone interview.

4. include a statement that applicant agrees to conduct such an interview when requested by the examiner.

5. include a statement, made based on a good faith belief, that a preexamination search in compliance with the following requirements, was conducted, including an identification of the filed of search by United States class and subclass, where applicable, and for database searches, the search logic or chemical structure or sequence used as a query, the name of the file(s) searched and the database service, and the date of the search.

The preexamination search must:

5.1 involve U.S. patents and patent application publications, foreign patent documents, and non-patent literature, unless the applicant can justify with reasonable certainty that no references more pertinent than those already identified are likely to be found in the eliminated sources and includes such a justification with this statement;

5.2. be directed to the claimed invention and encompass all of the features of the claims, giving the claims the broadest reasonable interpretation;

5.3. encompass the disclosed features that may be claimed.

6. must provide in support of the petition an accelerated examination support document. An accelerated examination support document must include:

6.1. an information disclosure statement (IDS) in compliance with 37 CFR 1.98 citing each reference deemed most closely related to the subject matter of each of the claims;

6.2. an identification of all the limitations in the claims that are disclosed by the reference specifying where the limitation is disclosed in the cited reference;

6.3. a detailed explanation of how each of the claims are patentable over the references cited with particularity required by 37 CFR 1.111(b) and (c);

6.4. a concise statement of the utility of the invention as defined in each of the independent claims (unless the application is a design application);

6.5. a showing of where each limitation of the claims finds support under 35 USC 112, first paragraph, in the written description of the specification. If applicable, the showing must also identify: (1) each means- (or step) plus-function claim element that invokes consideration under 35 USC 112, sixth paragraph; and (2) the structure, material, or acts in the specification that corresponds to each means- (or step) plus-function claim element that invokes consideration under 35 USC 112, sixth paragraph; if the application claims the benefit of one or more applications under title 35, United States Code, the showing must also include where each limitation of the claims finds support under 35 USC 112, first paragraph, in each such application in which such supports exists;

6.6. an identification of any cited references that may be disqualified under 35 USC 103(c).

REVIEW OF FACTS

The conditions set forth under section I. above are considered to have been met. However, the petition fails to comply with conditions set forth under section II. items 5.2 and 5.3.

For these reasons cited above, the petition fails to meet the required conditions to be accorded special status under the accelerated examination procedure.

Regarding the requirement in items 5.2 and 5.3 above, the preexamination search document provided with the instant petition is deficient as follows: The US field of search and database searches which are to be provided under section 8(A) are not sufficient. In addition to the search areas provided, applicant would also need to search in the following class/ subclasses: 340/10.4, 539.13, 825.49; 342/465.

If any request for reconsideration is filed, an updated preexamination search must be conducted as per items 5.2 and 5.3 above, and the Preexamination Search Document must be amended to indicate such; and the Accelerated Examination Support Document must also be amended to include the necessary reference and discussion of any newly found and cited prior art in accordance with all of items 6 through 6.6 above.

DECISION

For the above-stated reasons, the petition is **dismissed**. The application will therefore be taken up by the examiner for action in its regular turn.

Petitioner is given a single opportunity to perfect the petition. Any request for reconsideration of this decision must be submitted within 1 (one) month or 30 (thirty) days, whichever is longer, (no extension of time under 37 CFR 1.136(a)) from the date of this decision in order to be considered timely. Any request for reconsideration must address the deficiencies indicated above.

Petitioner is reminded that, upon granting of the special status of the application on request for reconsideration, the application will be processed expeditiously. However, due to the dismissal of the instant petition, examination may not be completed within twelve months of the filing date of the application.

Any inquiry regarding this decision should be directed to Ken Wieder, Quality Assurance Specialist, at (571) 272-2986.

Kenneth A. Wieder
Quality Assurance Specialist
Technology Center 2600
Communications

UNITED STATES PATENT AND TRADEMARK OFFICE

Commissioner for Patents
United States Patent and Trademark Office
P.O. Box 1450
Alexandria, VA 22313-1450
www.uspto.gov

MAIL

SEP 19 2008

DIRECTOR'S OFFICE
TECHNOLOGY CENTER 2600

Clause Eight Intellectual Property Services
P.O Box 131270
CARLSBAD CA 92013

In re Application of:
NIERENBERG, NICOLAS C., et al.
Serial No.: 12/116,221
Filed: May 7, 2008

Title: **WIRELESS TRACKING SYSTEM AND METHOD UTILIZING TAGS WITH VARIABLE POWER LEVEL TRANSMISSIONS**

DECISION ON PETITION TO MAKE SPECIAL FOR NEW APPLICATION UNDER 37 C.F.R. § 1.102 & M.P.E.P. § 708.02

This is a decision on the petition filed on July 23, 2008 requesting reconsideration to make the above-identified application special for accelerated examination procedure under 37 C.F.R. § 1.102(d).

All of the requirements to correct the deficiencies outlined in the petition decision mailed July 1, 2008 have been met.

The petition to make the application special is **GRANTED**.

The application is eligible for accelerated examination and the petition complies with the conditions for granting the application special status pursuant to the "Change to Practice for Petitions in Patent Applications to Make Special and for Accelerated Examination" published June 26, 2006, in the Federal Register. (71 Fed. Reg. 36323).

The prosecution of the instant application will be conducted expeditiously according to the following guidelines.

1. The application will be docketed to an examiner and taken up for action within two weeks of the date of this decision.

2. Restriction Practice:
   If the examiner determines that the claims are not directed to a single invention, a telephone request to elect one single invention will be made pursuant to MPEP 812.01.

As a prerequisite to the grant of this petition, the applicant has agreed to make an oral election, by telephone, without traverse. If the applicant refuses to make an election without traverse, or the examiner cannot reach the applicant after a reasonable effort, the examiner will treat the first claimed invention (invention defined by claim 1) as having being constructively elected without traverse for examination.

3. Office action:
If it is determined that, after appropriate consultation, there is a potential rejection or any other issue to be addressed, the examiner will telephone the applicant and arrange an interview to discuss and resolve the issue. An Office action, other than a Notice of Allowance and Fee(s) Due (Notice of Allowance), will not be issued unless either: 1) an interview was conducted but did not result in agreed to action that places the application in condition for allowance, or, 2) a determination is made that an interview would be unlikely to result in the application being placed in condition for allowance, and 3) an internal conference has been held to review any rejection of any claim.

4. Time for Reply:
An Office action other than a Notice of Allowance or a final Office action will set a shortened statutory period of one month or thirty days, whichever is longer, for reply with no extension of time available under 37 CFR 1.136(a). Failure to timely file a reply within this non-extendible period for reply will result in the abandonment of the application.

5. Reply by Applicant:
A timely reply to an Office action other than the Notice of Allowance must be submitted electronically via EFS or EFS-web and limited to addressing the rejections, objections and requirement made. Any amendment that attempts to: 1) add claims which would result in more than three pending independent claims or more than twenty pending total claims; 2) present claims not encompassed by the pre-examination search or an updated accelerated examination support document; or 3) present claims that are directed a non-elected invention or an invention other than that previously claimed and examined in the application, will be treated as not fully responsive and will not be entered.

   For any amendment to the claims (including any new claim) that is not encompassed by the accelerated examination support document, applicant must provide an updated accelerated examination support document that encompasses the amended or new claims at the time of filing of the amendment.

   To proceed expeditiously with the examination, it is recommended that a reply with amendments made to any claim or with any new claim being added be accompanied by an updated accelerated examination support document or a statement explaining how the amended or new claim is supported by the original accelerated examination support document.

6. Information Disclosure Statement (IDS):

Any IDS filed during prosecution must be submitted electronically via EFS or EFS-web, accompanied by an updated accelerated examination support document, and be in compliance with 37 CFR 1.97 and 1.98.

7. Post-Allowance Processing:
   To expedite processing of the allowed application into a patent, the applicant must: 1) pay the required fees within one month of the date of the Notice of Allowance, and 2) not file any post allowance papers not required by the Office. In no event may the issue fee be paid and accepted later than three months from the date of the Notice of Allowance.

8. After-Final and Appeal Procedures:
   To expedite prosecution, after receiving the final Office action, applicant must: 1) promptly file a notice of appeal, an appeal brief and appeal fees; and 2) not request a pre-appeal brief conference.

   Any amendment, affidavit or other evidence filed after final Office action must comply with applicable rules and the requirements outlined in numbered paragraphs 5 and 6 above.

   On appeal, the application will proceed according to normal appeal procedures. After appeal, the application will again be treated special.

9. Proceedings Outside the Normal Examination Process:
   If the application becomes involved in a proceeding that is outside the normal examination process (e.g., a secrecy order, national security review, interference proceeding, petitions under 37 CFR 1.181, 182 or 183), the application will be treated special before and after such proceeding.

10. Final Disposition:
    The twelve month goal of this accelerated examination procedure ends with a final disposition. The mailing of a final Office action, a Notice of Allowance, the filing of a Notice of Appeal, or the filing of a Request for Continued Examination (RCE) is the final disposition.

If, during prosecution, a paper is not filed electronically using EFS-web, a reply is filed but is not fully responsive, the application is involved in an appeal, or a proceeding outside normal examination process, the application will still be examined expeditiously, however, the final disposition may occur more than twelve months from the filing of the application.

Any inquiry regarding this decision should be directed to Ken Wieder, Quality Assurance Specialist, at (571) 272-2986.

Kenneth A. Wieder
Quality Assurance Specialist
Technology Center 2600
Communications

UNITED STATES PATENT AND TRADEMARK OFFICE

Commissioner for Patents
United States Patent and Trademark Office
P.O. Box 1450
Alexandria, VA 22313-1450
www.uspto.gov

YOUNG & THOMPSON
209 Madison Street
Suite 500
ALEXANDRIA VA 22314

MAILED

APR 20 2009

OFFICE OF PETITIONS

In re Application of NACIRI and BOSCHER Application No. 12/116,236 Filed: 05/07/2008 Attorney Docket No. 0579-1186 Title: METHOD FOR CRYPTOGRAPHIC PROCESSING OF A MESSAGE	: : : : : : :	DECISION ACCORDING STATUS UNDER 37 CFR 1.47(a)

This is in response to the petition under 37 CFR 1.47(a), filed October 27, 2008. Petitioners obtained an extension of time for response within the third month. Accordingly, the petition is filed timely.

The petition is **GRANTED**.

Petitioners have shown that they sent a complete copy of the application papers to Arnaud Boscher, the non-signing inventor, via email, as well as by registered mail return receipt to his last known address. Petitioners provided a copy of the acknowledgment receipt signed by Mr. Boscher. Nevertheless, Mr. Boscher has not responded to the request to sign the declaration and join in the filing of the above-identified application.

The above-identified application and papers have been reviewed and are in compliance with 37 CFR 1.47(a). This application is hereby accorded Rule 1.47(a) status. As provided in Rule 1.47(c), this Office will forward notice of this application's filing to the non-signing inventor at the address given in the petition. Notice of the filing of this application will also be published in the Official Gazette.

The matter is being referred to Technology Center AU 2431 for examination in due course.

Inquiries regarding this decision should be directed to the undersigned at (571) 272-3211.

Christina T. Donnell

Christina Tartera Donnell
Senior Petitions Attorney
Office of Petitions

UNITED STATES PATENT AND TRADEMARK OFFICE

Commissioner for Patents
United States Patent and Trademark Office
P.O. Box 1450
Alexandria, VA 22313-1450
www.uspto.gov

Mr. Arnaud BOSCHER
11, rue Arago
92800 Puteaux, France

MAILED

APR 20 2009

OFFICE OF PETITIONS

In re Application of :
NACIRI and BOSCHER :
Application No. 12/116,236 : LETTER
Filed: 05/07/2008 :
Attorney Docket No. 0579-1186 :
Title: METHOD FOR CRYPTOGRAPHIC :
PROCESSING OF A MESSAGE :

Dear Mr. Boscher:

You are named as a joint inventor in the above identified United States patent application, filed under the provisions of 35 U.S.C. 116 (United States Code), and 37 CFR 1.47(a), Rules of Practice in Patent Cases. Should a patent be granted on the application you will be designated therein as a joint inventor. As a named inventor you are entitled to inspect any paper in the file wrapper of the application, order copies of all or any part thereof (at a prepaid cost per 37 CFR 1.19) or make your position of record in the application. Alternatively, you may arrange to do any of the preceding through a registered patent attorney or agent presenting written authorization from you. If you care to join the application, counsel of record (see below) would presumably assist you. Joining in the application would entail the filing of an appropriate oath or declaration by you pursuant to 37 CFR 1.63. Requests for information regarding your application should be directed to the File Information Unit at 571- 272-3150. Information regarding how to pay for and order a copy of the application or a specific paper in the application, should be directed to Certification Division at 571-272-3150 or 1-800-972-6382 (outside the Washington D.C. area).

C. T. Donnell

Christina Tartera Donnell
Senior Petitions Attorney
Office of Petitions

YOUNG & THOMPSON
209 Madison Street
Suite 500
ALEXANDRIA VA 22314

UNITED STATES PATENT AND TRADEMARK OFFICE

UNITED STATES DEPARTMENT OF COMMERCE
United States Patent and Trademark Office
Address: COMMISSIONER FOR PATENTS
P.O. Box 1450
Alexandria, Virginia 22313-1450
www.uspto.gov

APPLICATION NO.	FILING DATE	FIRST NAMED INVENTOR	ATTORNEY DOCKET NO.	CONFIRMATION NO.
12/116,269	05/07/2008	Lalit K. Mestha	A1097USDIV/200437US02	6745

62095 7590 07/12/2010
FAY SHARPE / XEROX - ROCHESTER
1228 EUCLID AVENUE, 5TH FLOOR
THE HALLE BUILDING
CLEVELAND, OH 44115

EXAMINER
BAKER, CHARLOTTE M

ART UNIT	PAPER NUMBER
2625	

MAIL DATE	DELIVERY MODE
07/12/2010	PAPER

Please find below and/or attached an Office communication concerning this application or proceeding.

The time period for reply, if any, is set in the attached communication.

UNITED STATES PATENT AND TRADEMARK OFFICE

Commissioner for Patents
United States Patent and Trademark Office
P.O. Box 1450
Alexandria, VA 22313-1450
www.uspto.gov

MAIL

JUL 12 2010
DIRECTOR'S OFFICE
TECHNOLOGY CENTER 2600

FAY SHARPE / XEROX - ROCHESTER
1228 EUCLID AVENUE, 5TH FLOOR
THE HALLE BUILDING
CLEVELAND OH 44115

In re Application of:
MESTHA, LALIT et al
Application Serial No.: 12/116,269
Filed: May 7, 2008
For: **METHOD BASED DETECTION AND COMPENSATION OF GLITCHES IN COLOR MEASUREMENT SYSTEMS**

DECISION ON PETITION

MAIL

JUL 12 2010
DIRECTOR'S OFFICE
TECHNOLOGY CENTER 2600

This is a decision on the petition filed May 6, 2010 under 37 CFR § 1.181, requesting the Director to invoke his supervisory authority and withdraw the finality of the final Office action mailed January 26, 2010.

PERTINENT BACKGROUND

This application was filed May 7, 2008.

A first Office action was issued July 30, 2009 rejecting claims 1-3, 5-8 and 13-15 under 35 USC 102(b) as being anticipated by Pariser (US 5,677,967). Claim 4 was rejected under 35 USC 103(a) as being unpatentable over Pariser in view of Stokes (6,345,128). Claim 12 was rejected under 35 USC 103(a) as being unpatentable over Pariser in view of Velho et al (US 5,855,433). Claims 9-11 were objected to as being dependent upon a rejected base claim, but would be allowable if rewritten in independent form including all of the limitations of the base claim and any intervening claims.

A response to the first Office action was timely filed and received in the US Patent and Trademark Office on October 29, 2009. Claims 1-2 and 7 were amended.

A Final Office action was issued on January 26, 2010 with claims 1-3, 5-8 and 13-15 being anticipated under 35 USC 102(b) over Pariser (US 5,677,967), claims 4 being unpatentable under 35 USC 103(a) over Pariser in view of Stokes (US 6,345,128), and claim 12 being unpatentable under 35 USC 103(a) over Pariser in view of Velho et al (US 5,855,433). Claims 9-11 were objected to as being dependent upon a rejected base claim, but would be allowable if rewritten in independent form including all of the limitations of the base claim and any intervening claims.

On March 31, 2010, Applicants filed an amendment after Final.

On April 29, 2010, an Advisory action was mailed.

On May 6, 2010, Petitioner seeks relief by filing a petition under 37 CFR 1.181 requesting the finality of the Final Office action of January 26, 2010 be withdrawn.

REGULATIONS AND PRACTICE

37 CFR § 1.113(a) states in part that:

> (a) On the second or any subsequent examination or consideration by the examiner the rejection or other action may be made final, whereupon applicant's or patent owner's reply is limited to appeal in the case of rejection of any claim (§ 1.191) or to amendment as specified in § 1.116. ...

MPEP § 706.07(a) states in part that:

> Under present practice, second or any subsequent action on the merits shall be final, except where the examiner introduces a new ground of rejection that is (not) necessitated by applicant's amendment of the claims...

MPEP 1207.03 III states in part that:

> There is no new ground of rejection when the basic thrust of the rejection remains the same such that an appellant has been given a fair opportunity to react to the rejection. See In re Kronig, 539 F.2d 1300, 1302-03, 190 USPQ 425, 426-27 (CCPA 1976).

OPINION

Petitioner contends "since the only amendments made in the previous submission were to correct punctuation and spelling, and since in most, if not all, cases, new grounds of rejection or designations are applied against unamended elements of the claims, the new grounds of rejection were not necessitated by Applicants' amendment."

A review of the record finds that the grounds of rejection was not changed by the examiner from the non-final Office action mailed July 30, 2009 and the subsequent final rejection mailed January 26, 2010. In both Office actions, claims 1-3, 5-8 and 13-15 were rejected under 35 USC 102(b) as being anticipated by Pariser (US 5,677,967). Claim 4 was rejected under 35 USC 103(a) as being unpatentable over Pariser in view of Stokes (6,345,128). Claim 12 was rejected under 35 USC 103(a) as being unpatentable over Pariser in view of Velho et al (US 5,855,433). Indicating to Applicants where a particular limitation is located, does not change the grounds of the rejection. The thrust of the rejection is unchanged as well.

CONCLUSION

For the above stated reasons, the petition to withdraw the finality of the Final Office action mailed January 26, 2010 is **DENIED**.

Since the Notice of Appeal and Pre-Appeal Conference Request have been filed May 24, 2010, the application has been forwarded to the examiner to hold panel and respond to the Pre-Appeal Conference Request.

Wanda L. Walker

Wanda L. Walker, Director
Technology Center 2600
Communications

UNITED STATES PATENT AND TRADEMARK OFFICE

Commissioner for Patents
United States Patent and Trademark Office
P.O. Box 1450
Alexandria, VA 22313-1450
www.uspto.gov

FASTH LAW OFFICES (ROLF FASTH)
26 PINECREST PLAZA, SUITE 2
SOUTHERN PINES NC 28387-4301

COPY MAILED

SEP 23 2009

OFFICE OF PETITIONS

In re Application of	:	
Graphenius, Jonas	:	DECISION ON PETITION
Application No. 12/116,282	:	TO WITHDRAW
Filed: May 7, 2008	:	FROM RECORD
Attorney Docket No. 495.1322PAT	:	

This is a decision on the Request to Withdraw as attorney or agent of record under 37 C.F.R. § 1.36(b), filed May 29, 2009.

The request is **APPROVED**.

A grantable request to withdraw as attorney/agent of record must be signed by every attorney/agent seeking to withdraw or contain a clear indication that one attorney is signing on behalf of another/others. The Office will require the practitioner(s) to certify that he, she or they have: (1) given reasonable notice to the client, prior to the expiration of the reply period, which the practitioner(s) intends to withdraw from employment; (2) delivered to the client or a duly authorized representative of the client all papers and property (including funds) to which the client is entitled; and (3) notified the client of any replies that may be due and the time frame within which the client must respond, pursuant to 37 CFR 10.40 (c).

The request was signed by Rolf Fasth on behalf of himself. Rolf Fasth has been withdrawn. Applicant is reminded that there is no attorney of record at this time.

All future correspondence will be directed to the first-named inventor, Jonas Graphenius, at the address indicated below.

Telephone inquires concerning this decision should be directed to the undersigned at (571) 272-3206. All other inquires concerning either the examination or status of the application should be directed to the Technology Center.

Liana Walsh
Petitions Examiner
Office of Petitions

cc: JONAS GRAPHENIUS
LYCKSELEVAGEN 14
VALLINGBY 162 6-7 SE SWEDEN

UNITED STATES PATENT AND TRADEMARK OFFICE

UNITED STATES DEPARTMENT OF COMMERCE
United States Patent and Trademark Office
Address: COMMISSIONER FOR PATENTS
P.O. Box 1450
Alexandria, Virginia 22313-1450
www.uspto.gov

General Motors Corporation
Legal Staff
Mail Code 482-C23-B21
P.O. Box 300
Detroit, MI 48265-3000

Mail Date: 04/21/2010

Applicant	: Kurt D. Mc Lain	: DECISION ON REQUEST FOR
Patent Number	: 7644608	: RECALCULATION of PATENT
Issue Date	: 01/12/2010	: TERM ADJUSTMENT IN VIEW
Appliction No	: 12/116,360	: OF WYETH AND NOTICE OF INTENT TO
Filed	: 05/07/2008	: ISSUE CERTIFICATE OF CORRECTION
		:

The Request for Recalculation is **GRANTED** to the extent indicated.

The patent term adjustment has been determined to be **0** days. The USPTO will *sua sponte* issue a certificate of correction reflecting the amount of PTA days determined by the recalculation.

Prior to the issuance of the certificate of correction, the USPTO will afford patentee an opportunity to be heard and request reconsideration. Accordingly, patentee has **one month or thirty (30) days**, whichever is longer, to file a request for reconsideration of this patent term adjustment calculation. See 35 U.S.C. 154(b)(3)(B)(ii) and 37 CFR 1.322(a)(4). No extensions of time will be granted under 37 CFR 1.136.

Patentee should use document code PET.OP if electronically filing a request for reconsideration of this patent term adjustment calculation. The patentee must also include the information required by 37 CFR 1.705(b)(2) and the fee required by 37 CFR 1.18(e). If patentee does not file a timely request for reconsideration of this patent term adjustment calculation including the information required by 37 CFR 1.705(b)(2) and the fee required by 37 CFR 1.18(e), the USPTO will issue a certificate of correction reflecting the PTA determination noted above.

Patentee should be aware that in order to preserve the right to review in the United States District Court for the District of Columbia of the USPTO patent term adjustment determination, patentee must ensure that he or she also take the steps required under 35 U.S.C. 154(b)(4)(A) in a timely manner. Nothing in the request for recalculation should be construed as providing an alternative time frame for commencing a civil action under 35 U.S.C. 154(b)(4)(A).

Any questions concerning this decision should be directed to the Office of Patent Legal Administration at 571-272-7702.

UNITED STATES PATENT AND TRADEMARK OFFICE

Commissioner for Patents
United States Patent and Trademark Office
P.O. Box 1450
Alexandria, VA 22313-1450
www.uspto.gov

COPY MAILED
DEC 19 2008

FOLEY & LARDNER LLP
P.O. BOX 80278
SAN DIEGO CA 92138-0278

In re Application of	:
Tabb, Lee, Kong, Lu, Aye, F. Chen and J. Chen	:
Application No.: 12/116,364	: DECISION ACCORDING
Filed: May 7, 2008	: RULE 47(a) STATUS
Attorney Docket No: 054769-9931	:
For: BORDETELLA DETECTION ASSAY	

This is in response to the petition under 37 CFR 1.47(b), filed November 20, 2008. The petition is properly treated under 37 CFR 1.47(a).

The petition is **GRANTED**.

The above-identified application and papers have been reviewed and found in compliance with 37 CFR 1.47(a). This application is hereby accorded Rule 1.47(a) status.

The above-cited application was filed on May 7, 2008, and was not accompanied by a proper declaration. A Notice to File Missing Parts of Nonprovisional Application was mailed on May 27, 2008, requiring a properly executed declaration and surcharge along with other requirements. The notice allowed an extendable period for reply of two months from its mailing date. On November 20, 2008, the instant petition was filed with a request for an extension of time within the fourth month.

Petitioner has shown that inventor Lu has constructively refused to join the filing of the above-identified application after having been presented with the application papers. The above-identified application and papers have been reviewed and found in compliance with 37 CFR 1.47(a). This application is hereby accorded Rule 1.47(a) status.

As provided in Rule 1.47(c), this Office will forward notice of this application's filing to the non-signing inventor at the addresses given in the petition. Notice of the filing of this application will also be published in the Official Gazette.

This application will be forwarded to the Office of Patent Application Processing for further processing.

Telephone inquiries concerning this decision should be directed to the undersigned at (571) 272-3222.

Kenya A. McLaughlin
Petitions Attorney
Office of Petitions

UNITED STATES PATENT AND TRADEMARK OFFICE

Commissioner for Patents
United States Patent and Trademark Office
P.O. Box 1450
Alexandria, VA 22313-1450
www.uspto.gov

STRATEGIC PATENT GROUP, P.C.
P.O. BOX 1329
MOUNTAIN VIEW CA 94042

MAY 28 2008

In re Application of: Huang, Lucas K. et al. Application No.: 12/116,472 Filed: May 7, 2008 Title: SYNCHRONOUS MULTI-MEDIA RECORDING AND PLAYBACK WITH END USER CONTROL OF TIME, DATA, AND EVENT VISUALIZATION FOR PLAYBACK CONTROL OVER A NETWORK	DECISION ON PETITION TO MAKE SPECIAL FOR NEW APPLICATION UNDER 37 C.F.R. § 1.102 & M.P.E.P. § 708.02

This is a decision on the petition filed on May 7, 2008 to make the above-identified application special for accelerated examination procedure under 37 C.F.R. § 1.102(d).

The petition to make the application special is **DISMISSED**.

REGULATION AND PRACTICE

A grantable petition to make special under 37 C.F.R. § 1.102(d) and pursuant to the "Change to Practice for Petitions in Patent Applications to Make Special and for Accelerated Examination" published in the Federal Register on June 26, 2006 (71 Fed. Reg. 36323), must satisfy the following conditions:

I. Conditions Regarding the Application:

1. the application must be a non-reissue utility or design application filed under 37 CFR 1.111(a);
2. the application, the petition and the required fees must be filed electronically using the USPTO's electronic filing system (EFS), or EFS-web; if not filed electronically, a statement asserting that EFS and EFS-web were not available during the normal business hours.
3. at the time of filing, the application must be complete under 37 CFR 1.51 and in condition for examination;
4. the application must contain three or fewer independent claims and twenty or fewer total claims and the claims must be directed to a single invention.

II. Conditions Regarding the Petition:

The petition must:

1. be filed with the application;

2. include a statement that applicant agrees not to separately argue the patentability of any independent claim during any appeal in the application;

3. include a statement that applicant agrees to make an election without traverse in a telephone interview.

4. include a statement that applicant agrees to conduct such an interview when requested by the examiner.

5. include a statement, made based on a good faith belief, that a preexamination search in compliance with the following requirements, was conducted, including an identification of the field of search by United States class and subclass, where applicable, and for database searches, the search logic or chemical structure or sequence used as a query, the name of the file(s) searched and the database service, and the date of the search.

The preexamination search must:

5.1 involve U.S. patents and patent application publications, foreign patent documents, and non-patent literature, unless the applicant can justify with reasonable certainty that no references more pertinent than those already identified are likely to be found in the eliminated sources and includes such a justification with this statement;

5.2. be directed to the claimed invention and encompass all of the features of the claims, giving the claims the broadest reasonable interpretation;

5.3. encompass the disclosed features that may be claimed.

6. must provide in support of the petition an accelerated examination support document. An accelerated examination support document must include:

6.1. an information disclosure statement (IDS) in compliance with 37 CFR 1.98 citing each reference deemed most closely related to the subject matter of each of the claims;

6.2. an identification of all the limitations in the claims that are disclosed by the reference specifying where the limitation is disclosed in the cited reference;

6.3. a detailed explanation of how each of the claims are patentable over the references cited with particularity required by 37 CFR 1.111(b) and (c);

6.4. a concise statement of the utility of the invention as defined in each of the independent claims (unless the application is a design application);

6.5. a showing of where each limitation of the claims finds support under 35 U.S.C. 112, first paragraph, in the written description of the specification. If applicable, the showing must also identify: (1) each means- (or step) plus-function claim element that invokes consideration under 35 U.S.C. 112, sixth paragraph; and (2) the structure, material, or acts in the specification that corresponds to each means- (or step) plus-function claim element that invokes consideration under 35 U.S.C. 112, sixth paragraph; if the application claims the benefit of one or more applications under title 35, United States Code, the showing must also include where each limitation of the claims finds support under 35 U.S.C. 112, first paragraph, in each such application in which such supports exists;

6.6. an identification of any cited references that may be disqualified under 35 U.S.C. 103(c).

REVIEW OF FACTS

The conditions I: 1-4, II: 1-5, 5.1, 5.3, 6, 6.1, 6.4, 6.5 and 6.6 above are considered to have been met. However, the petition fails to comply with conditions II: 5.2, 6.2, and 6.3 above. Therefore, the petition fails to meet the required conditions to be accorded special status under the accelerated examination procedure.

Discussion

When referring to "the petition" herein below, the received papers under consideration include the "Petition to Make Special Under Accelerated Examination Program", the "pre-examination search document" the "accelerated examination support document" comprising pages 1-31, and an Information Disclosure Statement.

Regarding the requirements of section II element 5.2 outlined above, it appears the search outlined in the petition omitted a critical search area by not searching in class 715 subclasses 500.1, 512, 731,748, and in class 434 subclasses 219, 379, 30, 38, 63, 69, 257, and 307R.

It appears that the following text searching in East, Google, Yahoo, Ask.com may also be on point:
(author same simulat$3) and (training education)
educational near3 video
record$3 near3 ((training adj session) lecture experiment)
(lab near2 experiment) and 434/$.ccls. and network
lab near3 simulat$3
(simulat$3 with assessment) and annotat$3
434/$.ccls. and checklist and ((task item) near4 $2complete)
((replay review) near3 (session)) and (training education learning)
simulation and annotat$3 and 434/$.ccls.

Some of these searches may yield an unreasonable large number of results. They could be narrowed down in EAST within classes 434 and 715, and further by appropriately combining them.

Regarding the requirements of section II element 6.2 outlined above, the petition fails to identify all of the limitations in the application claims that are disclosed in each of the reference(s) and where the limitation is disclosed in each of the cited reference. As stated in the policy published in the Federal Register on June 26, 2006 (71 Fed. Reg. 36323), for each reference cited, the examination support document must include an identification of all the limitations in the claims that are disclosed by the reference specifying where the limitation is disclosed in the cited reference. The policy statement does not caveat "the independent claims", nor does it allow for grouping and general discussions. A grantable petition must delineate every limitation of every claim and identify where the equivalent limitation is disclosed in each piece of prior art cited on the IDS. As is published on www.uspto.gov/web/patents/accelerated/ in "Guidelines for Applicants under the new accelerated examination procedures"):

For each reference cited, the accelerated examination support document must include an identification of all the limitations in the claims that are disclosed by the reference specifying where the limitation is disclosed in the cited reference. Applicants should specify where in each of the cited references the particular claim limitations are found. This process is intended to be analogous to the analysis an examiner uses when locating a relevant prior art reference and then determining whether the reference contains the claimed limitation. For each claimed limitation, the examiner would consider the disclosure of the reference and all reasonable portions in the reference where the limitation is shown. When preparing an Office Action, the examiner would correlate the limitation to the portion of reference which best characterizes the limitation. This part of the AESD is not intended to be an exhaustive listing of every conceivable subjective interpretation of how a claim limitation may read on the reference. Applicants should point out what are considered to be the relevant representations of the limitation in the reference. A limitation may be found in more than one portion of the reference and should be pointed out, yet the intention is not to have applicants point out every conceivable interpretation. The USPTO will adopt a rule of reason when evaluating this portion of the AESD. Unless the representation is so deficient that it would materially effect examination of the application (e.g., numerous instances where the limitations are not shown where applicant states they are), the representation will be deemed to be sufficient for this part of the AESD.

Petitioner's submission is not specific enough. Petitioner points out some limitations of some of the claims and provides direction to areas of the prior art where the corresponding limitation may be found. Petitioner does not address <u>each limitation</u> and where it is (<u>or state that it is not</u>) found in each one of the most closely related prior art. Applicant chose to bundle limitations together, therefore lacking specificity. The requirement of section II element 6.2 can be satisfied by listing verbatim all the presently filed claims (i.e., the claims of the instant application) and by indicating where <u>each limitation</u> of each one of said presently filed claims is taught (or is not taught) in <u>each one</u> of the cited most closely related references, by specifically indicating the element number and/or the relevant page/paragraph and line number(s), or by indicating "(not disclosed)" where appropriate - in order to ensure that no limitation was left out inadvertently. This one-to-one mapping should be performed individually, with regard to each one of the most closely related prior art that has been cited, one reference at a time.

Similarly, with respect to the requirements of section II element 6.3 outlined above, the petition fails to provide a detailed explanation of how each one of the claims is patentable over (each of) the reference(s) with particularity required by 37 CFR 1.111(b) and (c). Petitioners should be specific in their explanation and include the identification of specific claim limitations that support their position, where appropriate. Petitioners must distinguish each claim from each piece of prior art cited. General statements that the claims are neither anticipated nor rendered obvious by the cited references or that the references are not properly combinable will not be acceptable. The Office cannot infer or guess what petitioner believes the differences between the claims and the teachings of the prior art to be. Petitioner's statements must also be consistent and must be related to the claim language. In the instant petition, Applicant chose to bundle

limitations, therefore lacking specificity. For these reasons, the petition does not meet the requirement of section II, element 6.3. The requirement of section II element 6.3 can be satisfied by indicating for each one of the presently filed claims (i.e., the claims of the instant application) which specific limitation(s) in each one of said presently filed claims define(s) over each one of the most closely related references that has been cited. With regard to each dependent claim, there should be an unequivocal statement whether the patentability of each dependent claim is predicated solely on that of the claim from which it depends (condition presently satisfied), or Applicant should provide a detailed explanation of patentability specific to that particular claim. This patentability showing should be performed individually, with regard to each one of the most closely related prior art that has been cited, one reference at a time.

To summarize the deficiencies of elements 6.2 and 6.3 above, each limitation in each claim has to be specifically, distinctly, and uniquely addressed with regard to each one of the cited references.

DECISION

For the above-stated reasons, the petition is **dismissed**. The application will therefore be taken up by the examiner for action in its regular turn.

Petitioner is given a single opportunity to perfect the petition. Any request for reconsideration of this decision must be submitted within 1 (one) month or 30 (thirty) days, whichever is longer, (no extension of time under 37 CFR 1.136(a)) from the date of this decision in order to be considered timely. Any request for reconsideration must address all of the deficiencies indicated above.

Petitioner is reminded that, upon granting of the special status of the application on request for reconsideration, the application will be processed expeditiously. However, due to the dismissal of the instant petition, examination may not be completed within twelve months of the filing date of the application.

Any inquiry regarding this decision should be directed to Ehud Gartenberg, TC 3700 Special Programs Examiner, at (571) 272-4828. In his absence, an inquiry can be directed to J. Harrison, Special Program Examiner, at (571) 272-4449.

Ehud Gartenberg

Ehud Gartenberg
Special Programs Examiner
Technology Center 3700

UNITED STATES PATENT AND TRADEMARK OFFICE

Commissioner for Patents
United States Patent and Trademark Office
P.O. Box 1450
Alexandria, VA 22313-1450
www.uspto.gov

STRATEGIC PATENT GROUP, P.C.
P.O. BOX 1329
MOUNTAIN VIEW CA 94042

JUL 10 2008

In re Application of: Huang, Lucas K., et al. Serial No.: 12/116,472 Filed: May 7, 2008 Title: SYNCHRONOUS MULTI-MEDIA RECORDING AND PLAYBACK WITH END USER CONTROL OF TIME, DATA, AND EVENT VISUALIZATION FOR PLAYBACK CONTROL OVER A NETWORK	DECISION ON PETITION TO MAKE SPECIAL FOR NEW APPLICATION UNDER 37 C.F.R. § 1.102 & M.P.E.P. § 708.02

This is a decision on the petition filed on May 7, 2008 together with the request for reconsideration filed June 30, 2008 to make the above-identified application special for accelerated examination procedure under 37 C.F.R. § 1.102(d).

The petition to make the application special is **DENIED**.

REGULATION AND PRACTICE

To be eligible for accelerated examination under 37 C.F.R. § 1.102(d) and pursuant to the "Change to Practice for Petitions in Patent Applications to Make Special and for Accelerated Examination" published in the Federal Register on June 26, 2006 (71 Fed. Reg. 36323), the following conditions must be satisfied:

1. The application must be a non-reissue utility or design application filed under 37 CFR 1.111(a);
2. The application, the petition and the required fees must be filed electronically using the USPTO's electronic filing system (EFS), or EFS-web; if not filed electronically, a statement asserting that EFS and EFS-web were not available during the normal business hours;
3. The application, at the time of filing, must be complete under 37 CFR 1.51 and in condition for examination;
4. The application must contain three or fewer independent claims and twenty or fewer total claims and the claims must be directed to a single invention.

The application as filed is not eligible for the accelerated examination under 37 C.F.R. § 1.102(d) because it was not complete under 37 CFR 1.51 and in condition for examination at the

time of filing. The mailing of a Notice to File Corrected Application Papers on May 15, 2008 is evidence that the application was not complete and in condition for examination at the time of filing, and furthermore Applicant has not replied to the requirement of said Notice to the present day.

Note that the policy as published in the Federal Register on June 26, 2006 as outlined on 36326, part VIII, conditions for examination, section (f), conditions for examination include drawings in compliance with 37 CFR 1.84. As the drawings as filed were not in compliance with 37 CFR 1.84 at filing, the application is not considered to be complete under 37 CFR 1.51 and was not in condition for examination at the time of filing. Therefore, the application is ineligible for consideration under the accelerated examination program.

For the above-stated reasons, the petition is **DENIED**. The application will therefore be taken up by the examiner for action in its regular turn.

Any inquiry regarding this decision should be directed to Ehud Gartenberg, TC 3700 Special Program Examiner, at (571) 272-4828. In his absence, an inquiry can be directed to J. Harrison, Special Program Examiner, at 571 272-4449.

Ehud Gartenberg

Ehud Gartenberg
Special Program Examiner
Technology Center 3700

Encl. "Comments with regard to a two pages letter filed June 30, 2008," with 4 attachments.

Comments with regard to a two pages letter filed June 30, 2008

With regard to the two pages letter filed on June 30, 2008, and as a courtesy to Applicant, the following is noted:

I. In the present application, serial number 12/116,472, the Data Sheet, the Declaration, the first page of the Specification, and the USPTO PALM record (see attachments), all indicate claim of domestic priority benefit to application serial number 11/611,792. Application serial number 11/939,329 is not mentioned anywhere. According to 37 C.F.R 1.77(b)(2) and 37 C.F.R. 1.78(2)(i), Applicant had the duty to cross reference any related application(s), but he did not do so. The two page letter of June 30, 2008 claiming "relatedness" to application serial no. 11/939,329 is not the proper venue to disclose related applications, and furthermore it was not filed timely to be of effect for the petition decision.

II. In the denial of the petition in application serial number 11/939,329, the Examiner indicated only the biggest of the deficiencies related to that application. However, in concluding that communication, the Examiner indicated the following (note: the following passage is reproduced from the decision denying the Accelerated Examination in application serial number 11/939,329):

"For future reference and as a courtesy to the Applicant, the Examiner reminds the mapping requirements for all conditions of section II:

The requirement of section II element 6.2 can be satisfied by listing all the filed claims (i.e., the claims of the application) and by indicating where each limitation of each one of said filed claims is taught (or is not taught) in each one of the cited most closely related references, by specifically indicating the element number and/or the relevant page/paragraph and line numbers. This one-to-one mapping should be performed individually, with regard to each one of the most closely related prior art that has been cited, one reference at a time.

The requirement of section II element 6.3 can be satisfied by listing all the filed claims (i.e., the claims of the application) and by indicating which specific limitation(s) in each one of said filed claims define(s) over each one of the most closely related references that has been cited. With regard to each dependent claim, there should be an unequivocal statement whether the patentability of each dependent claim is predicated solely on that of the claim from which it depends, or Applicant should provide a detailed explanation of patentability specific to that particular claim. This patentability showing should be performed individually, with regard to each one of the most closely related prior art that has been cited, one reference at a time.

The requirement of section II element 6.5 can be satisfied by listing all the filed claims and by indicating where the application and the application(s) for which priority is claimed teach each limitation in each one of said filed claims, by indicating the element number and/or the relevant page and line numbers. Applicant's attention is also drawn to the requirements relevant under 35 U.S.C 112, 6th paragraph. Should this requirement not apply to the application, Applicant should make a statement in this regard."

In spite of the above, in the filing of the present application, Applicant did not comply, and still does not comply, with the requirements of section II elements 6.2 and 6.3.

III. For future reference, for a grantable petition to make special, Applicant must satisfy all the requirements under 37 C.F.R. § 1.102(d) and "Change to Practice for Petitions in Patent Applications to Make Special and for Accelerated Examination" published in the Federal Register on June 26, 2006 (71 Fed. Reg. 36323). Following the instructions above regarding mapping of claim limitations is a good starting point.

IV. In conclusion it is noted that each petition decision is based solely on the merits of the facts in case.

Ehud Gartenberg
Special Program Examiner
Technology Center 3700

Data Sheet of 12/116,472

PTO/SB/14 (07-07)
Approved for use through 06/30/2010. OMB 0651-0032
U.S. Patent and Trademark Office; U.S. DEPARTMENT OF COMMERCE
Under the Paperwork Reduction Act of 1995, no persons are required to respond to a collection of information unless it contains a valid OMB control number.

Application Data Sheet 37 CFR 1.76	Attorney Docket Number	AT003AC
	Application Number	
Title of Invention	SYNCHRONOUS MULTI-MEDIA RECORDING AND PLAYBACK WITH END USER CONTROL OF TIME, DATA, AND EVENT VISUALIZATION FOR PLAYBACK CONTROL OVER A NETWORK	

Customer Number	57580		
Email Address	stephen@spatents.com	Add Email	Remove Email

Application Information:

Title of the Invention	SYNCHRONOUS MULTI-MEDIA RECORDING AND PLAYBACK WITH END USER CONTROL OF TIME, DATA, AND EVENT VISUALIZATION FOR PLAYBACK CONTROL OVER A NETWORK		
Attorney Docket Number	AT003AC	**Small Entity Status Claimed**	☒
Application Type	Nonprovisional		
Subject Matter	Utility		
Suggested Class (if any)		**Sub Class (if any)**	
Suggested Technology Center (if any)			
Total Number of Drawing Sheets (if any)		**Suggested Figure for Publication (if any)**	

Publication Information:

☐ Request Early Publication (Fee required at time of Request 37 CFR 1.219)

☐ **Request Not to Publish.** I hereby request that the attached application not be published under 35 U.S. C. 122(b) and certify that the invention disclosed in the attached application **has not and will not** be the subject of an application filed in another country, or under a multilateral international agreement, that requires publication at eighteen months after filing.

Attachment I

Representative Information:

Representative information should be provided for all practitioners having a power of attorney in the application. Providing this information in the Application Data Sheet does not constitute a power of attorney in the application (see 37 CFR 1.32). Enter either Customer Number or complete the Representative Name section below. If both sections are completed the Customer Number will be used for the Representative Information during processing.

Please Select One:	◉ Customer Number	○ US Patent Practitioner	○ Limited Recognition (37 CFR 11.9)
Customer Number	57580		

Domestic Benefit/National Stage Information:

This section allows for the applicant to either claim benefit under 35 U.S.C. 119(e), 120, 121, or 365(c) or indicate National Stage entry from a PCT application. Providing this information in the application data sheet constitutes the specific reference required by 35 U.S.C. 119(e) or 120, and 37 CFR 1.78(a)(2) or CFR 1.78(a)(4), and need not otherwise be made part of the specification.

Prior Application Status	Pending		Remove
Application Number	Continuity Type	Prior Application Number	Filing Date (YYYY-MM-DD)
	Continuation of	11/611,792	2006-12-15

Additional Domestic Benefit/National Stage Data may be generated within this form by selecting the **Add** button. Add

Foreign Priority Information:

Oath of 12/116,472

Docket No: AT003

DECLARATION AND POWER OF ATTORNEYFOR PATENT APPLICATION

- ■ **Declaration Submitted with Initial Filing**
- ☐ **Declaration Submitted after Initial Filing (surcharge 37 CFR 1.16(e) required)**

As a below named inventor, I hereby declare that:

My residence/post office address and citizenship are as stated below next to my name;

I believe I am the original, first and sole inventor (if only one name is listed below) or an original, first and joint inventor (if plural names are listed below) of the subject matter which is claimed and for which a patent is sought on the invention entitled:

SYNCHRONOUS MULTI-MEDIA RECORDING AND PLAYBACK WITH END USER CONTROL OF TIME, DATA, AND EVENT VISUALIZATION FOR PLAYBACK CONTROL OVER A NETWORK

the specification of which

- ☐ is attached hereto.
- ■ was filed on 12/15/2006 and assigned Serial No 11611792.

Attachment II

I hereby state that I have reviewed and understand the contents of the above-identified specification, including the claims, as amended by any amendment(s) specifically referred to above. I acknowledge the duty to disclose all information which is material to patentability as defined in 37 CFR 1.56, including for continuation-in-part applications, material information which became available between the filing date of the prior application and the national or PCT international filing date of the continuation-in-part application.

Foreign Application(s) and/or Claim of Foreign Priority

I hereby claim foreign priority benefits under Title 35, United States Code Section 119 of any foreign application(s) for patent or inventor(s) certificate listed below and have also identified below any foreign application for patent or inventor(s) certificate having a filing date before that of the application on which priority is claimed:

COUNTRY	APPLICATION NUMBER	DATE FILED	PRIORITY CLAIMED UNDER 35 U.S.C.
			YES: NO:
			YES: NO:

Provisional Application

I hereby claim the benefit under Title 35, United States Code Section 119(e) of any United States provisional application(s) listed below:

APPLICATION SERIAL	FILING DATE

U.S. Priority Claim

I hereby claim the benefit under Title 35, United States Code, Section 120 of any United States application(s) listed below and, insofar as the subject matter of each of the claims of this application is not disclosed in the prior United States application in the manner provided by the first paragraph of Title 35, United States Code Section 112, I acknowledge the duty to disclose material information as defined in Title 37, Code of Federal Regulations, Section 1.56(a) which occurred between the filing date of the prior application and the national or PCT international filing date of this application:

APPLICATION SERIAL	FILING DATE	STATUS(patented/pending/abandoned)

First page of specification 12/116,472

SYNCHRONOUS MULTI-MEDIA RECORDING AND PLAYBACK WITH END USER CONTROL OF TIME, DATA, AND EVENT VISUALIZATION FOR PLAYBACK CONTROL OVER A NETWORK

CROSS-REFERENCE TO RELATED APPLICATION

[001] This application is a continuation of co-pending Patent Application Serial No. 11/611,792 filed December 15, 2006, assigned to the assignee of the present application, and incorporated herein by reference.

BACKGROUND OF THE INVENTION

Attachment III

[002] The use of simulation training is growing rapidly. A simulation training session is one in which training of personnel is performed through the use of a simulator device that outputs real-time data in response to interactions of the trainees. In the medical industry, for example, medical training centers conduct simulation training that generally involve students performing simulated medical procedures and/or examinations on a mannequin simulator, which exhibits symptoms of various ailments of a patient during simulated examination sessions. Other types of medical simulators include EKG machines, blood pressure monitors, and virtual reality endoscopic, laparoscopic, and endovascular simulators. During each simulated examination session, which usually takes place in an assigned examination room, the student interacts with the patient during an appointed time period to make a diagnosis of the patient's ailment and to prescribe a proposed treatment plan or perform a procedure. Each examination room is equipped with monitoring equipment, including audio, visual and time recoding devices, so that the student's simulated encounter with the patient can be monitored in real time by an evaluator, such as a faculty member or upper class

PALM

Continuity/Reexam Information for 12/116472

Parent Data
12116472, filed 05/07/2008
is a continuation of 11611792, filed 12/15/2006

Child Data
No Child Data

Appln Info | Contents | Petition Info | Atty/Agent Info | **Continuity/Reexam** | Foreign Data

Search Another: Application # [ ] Search **or Patent#** [ ] Search

PCT / [ ] / [ ] Search **or PG PUBS #** [ ] Search

Attorney Docket # [ ] Search

Bar Code # [ ] Search

To go back, right click here and select Back. To go forward, right click here and select Forward. To refresh, right click here and select Refresh.

Back to OASIS | Home page

Attachment IV

UNITED STATES PATENT AND TRADEMARK OFFICE

Commissioner for Patents
United States Patent and Trademark Office
P.O. Box 1450
Alexandria, VA 22313-1450
www.uspto.gov

WARD AND SMITH, P.A.
1001 COLLEGE COURT
P.O. BOX 867
NEW BERN, NC 28563-0867

MAILED

APR 27 2009

OFFICE OF PETITIONS

In re Application of	:	
Steven J. BRANDA, et al	:	
Application No. 12/116,479	:	DECISION ON PETITION
Filed: May 7, 2008	:	TO WITHDRAW
Attorney Docket No. ROC920080012US1	:	FROM RECORD
	:	

This is a decision on the Request to Withdraw as attorney or agent of record under 37 C.F.R. § 1.36(b), filed January 23, 2009.

The request is **NOT APPROVED** as moot.

A review of the file record indicates that the power of attorney to Ward and Smith, P.A., has been revoked by the assignee of the patent application on March 24, 2009. Accordingly, the request to withdraw under 37 C.F.R. § 1.36(b) is moot.

Telephone inquires concerning this decision should be directed to undersigned at 571-272- 6735.

Diane Goodwyn
Petitions Examiner
Office of Petitions

UNITED STATES PATENT AND TRADEMARK OFFICE

UNITED STATES DEPARTMENT OF COMMERCE
United States Patent and Trademark Office
Address: COMMISSIONER FOR PATENTS
P.O. Box 1450
Alexandria, Virginia 22313-1450
www.uspto.gov

APPLICATION NO.	FILING DATE	FIRST NAMED INVENTOR	ATTORNEY DOCKET NO.	CONFIRMATION NO.
12/116,522	05/07/2008	Jabez J. McClelland	NIT-18061	7233

40854 7590 06/16/2008
RANKIN, HILL & CLARK LLP
38210 Glenn Avenue
WILLOUGHBY, OH 44094-7808

EXAMINER

ART UNIT	PAPER NUMBER
2881	

MAIL DATE	DELIVERY MODE
06/16/2008	PAPER

Please find below and/or attached an Office communication concerning this application or proceeding.

The time period for reply, if any, is set in the attached communication.

UNITED STATES PATENT AND TRADEMARK OFFICE

Commissioner for Patents
United States Patent and Trademark Office
P.O. Box 1450
Alexandria, VA 22313-1450
www.uspto.gov

RANKIN, HILL & CLARK LLP
38210 Glenn Avenue
WILLOUGHBY, OH 44094-7808

In re Application of: Jabez J. MCCLELLAND et al. Serial No.: 12/116,522 Filed: May 7, 2008 Title: MAGNETO-OPTICAL TRAP ION SOURCE	DECISION ON PETITION TO MAKE SPECIAL FOR NEW APPLICATION UNDER 37 C.F.R. § 1.102 & M.P.E.P. § 708.02

This is a decision on the petition filed on May 7, 2008 to make the above-identified application special for accelerated examination procedure under 37 C.F.R. § 1.102(d).

The petition to make the application special is **DENIED**.

REGULATION AND PRACTICE

To be eligible for accelerated examination under 37 C.F.R. § 1.102(d) and pursuant to the "Change to Practice for Petitions in Patent Applications to Make Special and for Accelerated Examination" published in the Federal Register on June 26, 2006 (71 Fed. Reg. 36323), the following conditions must be satisfied:

1. The application must be a non-reissue utility or design application filed under 37 CFR 1.111(a);
2. The application, the petition and the required fees must be filed electronically using the USPTO's electronic filing system (EFS), or EFS-web; if not filed electronically, a statement asserting that EFS and EFS-web were not available during the normal business hours;
3. The application, at the time of filing, must be complete under 37 CFR 1.51 and in condition for examination;
4. The application must contain three or fewer independent claims and twenty or fewer total claims and the claims must be directed to a single invention.

The application as filed is not eligible for the accelerated examination under 37 C.F.R. § 1.102(d) because the application was not complete under 37 CFR § 1.51 and in condition for examination at the time of filing. For instance, the oath or declaration was not signed as evidenced by the Notice to File Missing Parts of Nonprovisional Application mailed on May 15, 2008.

For the above-stated reasons, the petition is **DENIED**. After the application is considered complete by the Office of Initial Patent Examination (OIPE), it will be taken up by the examiner for action in its regular turn.

Any inquiry regarding this decision should be directed to Quality Assurance Specialist Jose' G. Dees at (571) 272-1569.

Jose' G. Dees, Quality Assurance Specialist
Technology Center 2800
Semiconductors, Electrical and Optical
Systems and Components

DECISION ON PETITION ROUTING SLIP

Application No.: 12116522

Art Unit: 2800

For Director's Secretary:

☐ **Granted** ☑ **Denied** ☐ **Dismissed**

- ☐ Decision to be reviewed and signed by Director
- ☑ Mail Decision & enter decision in Petition Database
- ☐ Forward a copy of the mailed decision to IFW for scanning
- ☐ Enter Paper Nos [ ] and the decision in PALM
- ☐ Other

For TECH Support Staff:

- ☐ Process and enter Paper Nos.
- ☐ Charge [ ] fee to D.A. No
- ☐ Other
- ☐ Forward file to

SPRE No. 1:	SPRE No. 2:	SPRE No. 3:	SPRE No. 4:
Hien Phan SPRE Jeff-8D55 (571) 272-1606	Jose Dees SPRE Jeff-8D59 (571)272-1569	Clayton E. LaBalle SPRE Jeff-8D51 (571) 272-1594	Ed Westin SPRE Jeff-8D65 (571)272-1638

UNITED STATES PATENT AND TRADEMARK OFFICE

Commissioner for Patents
United States Patent and Trademark Office
P.O. Box 1450
Alexandria, VA 22313-1450
www.uspto.gov

MARSH, FISCHMANN & BREYFOGLE, LLP
8055 EAST TUFTS AVENUE
SUITE 450
DENVER, CO 80237

MAILED

MAY 24 2010

OFFICE OF PETITIONS

In re Application of	:	
Ryan S. Wood	:	
Application No. 12/116,536	:	DECISION GRANTING PETITION
Filed: May 7, 2008	:	UNDER 37 CFR 1.313(c)(2)
Attorney Docket No. 50470-00001	:	

This is a decision on the petition under 37 CFR 1.313(c)(2), filed May 21, 2010, to withdraw the above-identified application from issue after payment of the issue fee.

The petition is not signed by an attorney of record. Nevertheless, in accordance with 37 CFR 1.34, the signature of Mr. Russell T. Manning appearing on the correspondence shall constitute a representation to the United States Patent and Trademark Office that he is authorized to represent the particular party on whose behalf he acts. If Mr. Manning desires to receive future correspondence regarding this file, the appropriate power of attorney documents must be submitted. All future correspondence regarding this application file will be directed solely to the above-noted correspondence address of record.

The petition is **GRANTED**.

The above-identified application is withdrawn from issue for consideration of a submission under 37 CFR 1.114 (request for continued examination). *See* 37 CFR 1.313(c)(2).

Petitioner is advised that the issue fee paid on May 6, 2010 cannot be refunded. If, however, this application is again allowed, petitioner may request that it be applied towards the issue fee required by the new Notice of Allowance.[1]

Telephone inquiries regarding this decision should be directed to undersigned at (571) 272-1642. All other inquiries regarding the examination or status of this application should be directed to the Technology Center.

---

[1] *The request to apply the issue fee to the new Notice may be satisfied by completing and returning the new Part B – Fee(s) Transmittal Form (along with any balance due at the time of submission). Petitioner is advised that the Issue Fee Transmittal Form must be completed and timely submitted to avoid abandonment of the application.*

This application is being referred to Technology Center AU 3741 for processing of the request for continued examination under 37 CFR 1.114 and for consideration of the concurrently filed information disclosure statement.

/AMW/
April M. Wise
Petitions Examiner
Office of Petitions

UNITED STATES PATENT AND TRADEMARK OFFICE

Commissioner for Patents
United States Patent and Trademark Office
P.O. Box 1450
Alexandria, VA 22313-1450
www.uspto.gov

KOESTNER BERTANI LLP
2192 MARTIN STREET, SUITE 150
IRVINE, CA 92612

MAILED

MAY 14 2009

OFFICE OF PETITIONS

In re Application of	:	
Edward H. **ALLEN, et al.**	:	
Application No. 12/116,559	:	DECISION ON PETITION
Filed: May 7, 2008	:	UNDER 37 CFR 1.137(b)
Attorney Docket No. **SW00859/a (P124USC1)**	:	

This is a decision on the petition under 37 CFR 1.137(b), filed February 17, 2009, to revive the above-identified application.

The petition is **GRANTED**.

The application became abandoned for failure to reply in a timely manner to the Notice to File Corrected Application Papers (Notice) mailed June 26, 2008. The Notice set a period for reply of two (2) months from the mail date of the Notice. No extensions of time under the provisions of 37 CFR 1.136(a) were obtained. Accordingly, the application became abandoned on August 27, 2008.

The petition satisfies the requirements of 37 CFR 1.137(b) in that petitioner has supplied (1) the reply in the form of corrected drawings; (2) the petition fee of $1620; and (3) an adequate statement of unintentional delay.

The petition is not signed by an attorney of record. Nevertheless, in accordance with 37 CFR 1.34, the signature of Ms. Mary Jo Bertani appearing on the correspondence shall constitute a representation to the United States Patent and Trademark Office that she is authorized to represent that particular party on whose behalf she acts.

The application is being referred to the Office of Patent Application Processing for further pre-examination processing.

Telephone inquiries concerning this decision should be directed to Monica A. Graves at (571) 272-7253.

Brian W. Brown
Petitions Examiner
Office of Petitions

UNITED STATES PATENT AND TRADEMARK OFFICE

Commissioner for Patents
United States Patent and Trademark Office
P.O. Box 1450
Alexandria, VA 22313-1450
www.uspto.gov

FOLEY & LARDNER LLP
975 PAGE MILL ROAD
PALO ALTO CA 94304

COPY MAILED

DEC 10 2009

OFFICE OF PETITIONS

In re Application of	:	
Jeffrey P. Froehlich et al.	:	
Application No. 12/116,565	:	DECISION ON PETITION
Filed: May 7, 2008	:	TO WITHDRAW
Attorney Docket No. 093182-1000	:	FROM RECORD
	:	

This is a decision on the Request to Withdraw as attorney or agent of record under 37 C.F.R. § 1.36(b), filed October 20, 2009.

The request is **NOT APPROVED.**

The Office will no longer accept address changes to a new practitioner or law firm filed with a Request, absent the filing of a power of attorney to the new representative. The Office will either change the correspondence address of record to the most current address information provided for the assignee of the entire interest who properly became of record under 37 CFR 3.71 or, if no assignee of the entire interest has properly been made of record under 37 CFR 3.71, the most current address information provided for the first named inventor.

Accordingly, the request to withdraw from record cannot be approved because there is no forwarding address for future correspondence. The request to change the correspondence address should be that of: (1) the first named inventor; or (2) an assignee of the entire interest under 37 C.F.R 3.71, who has properly intervened in this application. A power of attorney must be filed for all newly appointed attorney/agents.

All future communications from the Office will continue to be directed to the above-identified address until otherwise properly notified.

Telephone inquiries concerning this decision should be directed to the undersigned at 571-272-4618.

/Kimberly Inabinet/

Kimberly Inabinet
Petitions Examiner
Office of Petitions

UNITED STATES PATENT AND TRADEMARK OFFICE

Commissioner for Patents
United States Patent and Trademark Office
P.O. Box 1450
Alexandria, VA 22313-1450
www.uspto.gov

FOLEY & LARDNER LLP
975 PAGE MILL ROAD
PALO ALTO CA 94304

COPY MAILED
JAN 19 2010

In re Application of	:	
Jeffrey P. Froehlich et al.	:	
Application No. 12/116,565	:	DECISION ON PETITION
Filed: May 7, 2008	:	TO WITHDRAW
Attorney Docket No. 093182-1000	:	FROM RECORD
	:	

This is a decision on the renewed Request to Withdraw as attorney or agent of record under 37 C.F.R. § 1.36(b), filed December 22, 2009.

The request is **APPROVED**.

A grantable request to withdraw as attorney/agent of record must be signed by every attorney/agent seeking to withdraw or contain a clear indication that one attorney is signing on behalf of another/others. A request to withdraw will not be approved unless at least 30 (thirty) days would remain between the date of approval and the later of the expiration date of a time to file a response or the expiration date of the maximum time period which can be extended under 37 C.F.R. § 1.136(a).

The request was signed by Antoinette F. Konski on behalf of all attorneys/agents associated with customer number 38706. All attorneys/agents associated with customer number 38706 have been withdrawn.

Applicant is reminded that there is no attorney of record at this time.

All future correspondence will be directed to inventor/assignee. The address is copied below.

Telephone inquiries concerning this decision should be directed to Kimberly Inabinet at 571-272-4618.

/Kimberly Inabinet/

Kimberly Inabinet
Petitions Examiner
Office of Petitions

cc: Jeffrey P. Froehlich
720 Rutland Avenue
Ross 858
(John Hopkins University, Dept. of Medicine)
Baltimore, MD 21205

UNITED STATES PATENT AND TRADEMARK OFFICE

UNITED STATES DEPARTMENT OF COMMERCE
United States Patent and Trademark Office
Address: COMMISSIONER FOR PATENTS
P.O. Box 1450
Alexandria, Virginia 22313-1450
www.uspto.gov

APPLICATION NUMBER	FILING OR 371(C) DATE	FIRST NAMED APPLICANT	ATTY. DOCKET NO./TITLE
12/116,565	05/07/2008	Jeffrey P. FROEHLICH	093182-1000

CONFIRMATION NO. 7312

POWER OF ATTORNEY NOTICE

38706
FOLEY & LARDNER LLP
975 PAGE MILL ROAD
PALO ALTO, CA 94304

OC000000039728284

Date Mailed: 01/19/2010

NOTICE REGARDING CHANGE OF POWER OF ATTORNEY

This is in response to the Power of Attorney filed 12/22/2009.

- The withdrawal as attorney in this application has been accepted. Future correspondence will be mailed to the new address of record. 37 CFR 1.33.

/kainabinet/

Office of Data Management, Application Assistance Unit (571) 272-4000, or (571) 272-4200, or 1-888-786-0101

UNITED STATES PATENT AND TRADEMARK OFFICE

Commissioner for Patents
United States Patent and Trademark Office
P.O. Box 1450
Alexandria, VA 22313-1450
www.uspto.gov

MAIL

JUL 09 2008
DIRECTOR'S OFFICE
TECHNOLOGY CENTER 2600

Connolly Bove Lodge & Hutz LLP
Suite 1100
1875 Eye Street, NW
Washington DC 20006

In re Application of:
Oded Fuhrmann et al
Serial No.: 12/116575
Filed: May 7, 2008
Attorney Docket number: 20140-00402-US
Title: **SEAMLESS HYBRID COMPUTER HUMAN CALL SERVICE**

DECISION ON PETITION TO MAKE SPECIAL FOR NEW APPLICATION UNDER 37 C.F.R. § 1.102 & M.P.E.P. § 708.02

This is a decision on the petition filed on May 7, 2008 to make the above-identified application special for accelerated examination procedure under 37 C.F.R. § 1.102(d).

The petition to make the application special is **DISMISSED**.

REGULATION AND PRACTICE

A grantable petition to make special under 37 C.F.R. § 1.102(d) and pursuant to the "Change to Practice for Petitions in Patent Applications to Make Special and for Accelerated Examination" published in the Federal Register on June 26, 2006 (71 Fed. Reg. 36323), must satisfy the following conditions:

I. Conditions Regarding the Application:

1. the application must be a non-reissue utility or design application filed under 37 CFR 1.111(a);
2. the application, the petition and the required fees must be filed electronically using the USPTO's electronic filing system (EFS), or EFS-web; if not filed electronically, a statement asserting that EFS and EFS-web were not available during the normal business hours.
3. at the time of filing, the application must be complete under 37 CFR 1.51 and in condition for examination;
4. the application must contain three or fewer independent claims and twenty or fewer total claims and the claims must be directed to a single invention.

II. Conditions Regarding the Petition:

The petition must:

1. be filed with the application;

2. include a statement that applicant agrees not to separately argue the patentability of any independent claim during any appeal in the application;

3. include a statement that applicant agrees to make an election without traverse in a telephone interview.

4. include a statement that applicant agrees to conduct such an interview when requested by the examiner.

5. include a statement, made based on a good faith belief, that a preexamination search in compliance with the following requirements, was conducted, including an identification of the filed of search by United States class and subclass, where applicable, and for database searches, the search logic or chemical structure or sequence used as a query, the name of the file(s) searched and the database service, and the date of the search.

The preexamination search must:

5.1 involve U.S. patents and patent application publications, foreign patent documents, and non-patent literature, unless the applicant can justify with reasonable certainty that no references more pertinent than those already identified are likely to be found in the eliminated sources and includes such a justification with this statement;

5.2. be directed to the claimed invention and encompass all of the features of the claims, giving the claims the broadest reasonable interpretation;

5.3. encompass the disclosed features that may be claimed.

6. must provide in support of the petition an accelerated examination support document. An accelerated examination support document must include:

6.1. an information disclosure statement (IDS) in compliance with 37 CFR 1.98 citing each reference deemed most closely related to the subject matter of each of the claims;

6.2. an identification of all the limitations in the claims that are disclosed by the reference specifying where the limitation is disclosed in the cited reference;

6.3. a detailed explanation of how each of the claims are patentable over the references cited with particularity required by 37 CFR 1.111(b) and (c);

6.4. a concise statement of the utility of the invention as defined in each of the independent claims (unless the application is a design application);

6.5. a showing of where each limitation of the claims finds support under 35 USC 112, first paragraph, in the written description of the specification. If applicable, the showing must also identify: (1) each means- (or step) plus-function claim element that invokes consideration under 35 USC 112, sixth paragraph; and (2) the structure, material, or acts in the specification that corresponds to each means- (or step) plus-function claim element that invokes consideration under 35 USC 112, sixth paragraph; if the application claims the benefit of one or more applications under title 35, United States Code, the showing must also include where each limitation of the claims finds support under 35 USC 112, first paragraph, in each such application in which such supports exists;

6.6. an identification of any cited references that may be disqualified under 35 USC 103(c).

REVIEW OF FACTS

The conditions set forth under section I. above are considered to have been met. However, the petition fails to comply with conditions set forth under section II, items 5.1, 6.1, 6.2 and 6.3.

For these reasons cited above, the petition fails to meet the required conditions to be accorded special status under the accelerated examination procedure.

Regarding the requirement in item 5.1 above, the preexamination search document provided with the instant petition is deficient as follows: The search was too narrow. Search should have additionally included Class/subclass:

704/270; 258 and 261

If any request for reconsideration is filed, an updated preexamination search must be conducted as per item 5.1 above, and the Preexamination Search Document must be amended to indicate such; a new Information Disclosure Statement should be filed to cite any newly found prior art, and the Accelerated Examination Support Document must also be amended to include the necessary reference and discussion of any newly found and cited prior art in accordance with all of items 6 through 6.6 above.

Regarding the requirement in item 6.1 above, the accelerated examination support document only discuses two references deemed most closely related to the subject matter of the claims. However, the IDS lists several additional references. All references deemed most closely related to the subject matter of the claims must be discussed in the accelerated examination support document. *Therefore, any request for reconsideration must provide a detailed explanation in regard to the claim with respect to the other cited references as set forth in items 6.2 and 6.3 above or an explanation of why the references are no longer deemed most closely related.*

Regarding the requirement in item 6.2 above, the Accelerated Examination Support Document is deficient because section 9(B) titled "Identification of Limitations Disclosed by References" provides only a broad general description of each reference cited. However, the petition fails to identify all of the limitations in the claim of the application that are disclosed by each reference cited and specifying where each limitation is disclosed by each cited reference as required by item 6.2. Clarification is required.

Regarding the requirements of item 6.3 above, the Accelerated Examination Support Document is deficient because section 9(C) because the discussion of the patentability refers to the references not teaching "a method wherein a caller perceived the same voice whether the caller is speaking to a c human being or a computer". This is not specifically claimed.

DECISION

For the above-stated reasons, the petition is **dismissed**. The application will therefore be taken up by the examiner for action in its regular turn.

Petitioner is given a single opportunity to perfect the petition. Any request for reconsideration of this decision must be submitted within 1 (one) month or 30 (thirty) days, whichever is longer, (no extension of time under 37 CFR 1.136(a)) from the date of this decision in order to be considered timely. Any request for reconsideration must address the deficiencies indicated above.

Petitioner is reminded that, upon granting of the special status of the application on request for reconsideration, the application will be processed expeditiously. However, due to the dismissal of the instant petition, examination may not be completed within twelve months of the filing date of the application.

Any inquiry regarding this decision should be directed to Eileen Lillis, Quality Assurance Specialist, at (571) 272-6928.

/Eileen Lillis/

Eileen Lillis
Quality Assurance Specialist
Technology Center 2600

UNITED STATES PATENT AND TRADEMARK OFFICE

Commissioner for Patents
United States Patent and Trademark Office
P.O. Box 1450
Alexandria, VA 22313-1450
www.uspto.gov

MAIL

OCT 16 2008

DIRECTOR'S OFFICE
TECHNOLOGY CENTER 2600

Connolly Bove Lodge & Hutz LLP
Suite 1100
1875 Eye Street, NW
Washington DC 20006

In re Application of: Oded Fuhrmann et al. Serial No.: 12/116,575 Filed: 05/07/2008 Docket: 20140-00402-US Title: SEAMLESS HYBRID COMPUTER HUMAN CALL SERVICE	DECISION ON PETITION TO MAKE SPECIAL FOR NEW APPLICATION UNDER 37 C.F.R. § 1.102 & M.P.E.P. § 708.02

This is a decision on the petition filed on May 07, 2008 with a revised AE support document dated 8/11/2008 to make the above-identified application special for accelerated examination procedure under 37 C.F.R. § 1.102(d).

The petition to make the application special is **GRANTED**.

The application is eligible for accelerated examination and the petition complies with the conditions for granting the application special status pursuant to the "Change to Practice for Petitions in Patent Applications to Make Special and for Accelerated Examination" published June 26, 2006, in the Federal Register. (71 Fed. Reg. 36323).

The prosecution of the instant application will be conducted expeditiously according to the following guidelines.

1. The application will be docketed to an examiner and taken up for action within two weeks of the date of this decision.

2. Restriction Practice:
   If the examiner determines that the claims are not directed to a single invention, a telephone request to elect one single invention will be made pursuant to MPEP 812.01. As a prerequisite to the grant of this petition, the applicant has agreed to make an oral election, by telephone, without traverse. If the applicant refuses to make an election without traverse, or the examiner cannot reach the applicant after a reasonable effort, the

examiner will treat the first claimed invention (invention defined by claim 1) as having being constructively elected without traverse for examination.

3. Office action:
   If it is determined that, after appropriate consultation, there is a potential rejection or any other issue to be addressed, the examiner will telephone the applicant and arrange an interview to discuss and resolve the issue. An Office action, other than a Notice of Allowance and Fee(s) Due (Notice of Allowance), will not be issued unless either: 1) an interview was conducted but did not result in agreed to action that places the application in condition for allowance, or, 2) a determination is made that an interview would be unlikely to result in the application being placed in condition for allowance, and 3) an internal conference has been held to review any rejection of any claim.

4. Time for Reply:
   An Office action other than a Notice of Allowance or a final Office action will set a shortened statutory period of one month or thirty days, whichever is longer, for reply with no extension of time available under 37 CFR 1.136(a). Failure to timely file a reply within this non-extendible period for reply will result in the abandonment of the application.

5. Reply by Applicant:
   A timely reply to an Office action other than the Notice of Allowance must be submitted electronically via EFS or EFS-web and limited to addressing the rejections, objections and requirement made. Any amendment that attempts to: 1) add claims which would result in more than three pending independent claims or more than twenty pending total claims; 2) present claims not encompassed by the pre-examination search or an updated accelerated examination support document; or 3) present claims that are directed a non-elected invention or an invention other than that previously claimed and examined in the application, will be treated as not fully responsive and will not be entered.

   For any amendment to the claims (including any new claim) that is not encompassed by the accelerated examination support document, applicant must provide an updated accelerated examination support document that encompasses the amended or new claims at the time of filing of the amendment.

   To proceed expeditiously with the examination, it is recommended that a reply with amendments made to any claim or with any new claim being added be accompanied by an updated accelerated examination support document or a statement explaining how the amended or new claim is supported by the original accelerated examination support document.

6. Information Disclosure Statement (IDS):
   Any IDS filed during prosecution must be submitted electronically via EFS or EFS-web, accompanied by an updated accelerated examination support document, and be in compliance with 37 CFR 1.97 and 1.98.

7. Post-Allowance Processing:
   To expedite processing of the allowed application into a patent, the applicant must: 1) pay the required fees within one month of the date of the Notice of Allowance, and 2) not file any post allowance papers not required by the Office. In no event may the issue fee be paid and accepted later than three months from the date of the Notice of Allowance.

8. After-Final and Appeal Procedures:
   To expedite prosecution, after receiving the final Office action, applicant must: 1) promptly file a notice of appeal, an appeal brief and appeal fees; and 2) not request a pre-appeal brief conference.

   Any amendment, affidavit or other evidence filed after final Office action must comply with applicable rules and the requirements outlined in numbered paragraphs 5 and 6 above.

   On appeal, the application will proceed according to normal appeal procedures. After appeal, the application will again be treated special.

9. Proceedings Outside the Normal Examination Process:
   If the application becomes involved in a proceeding that is outside the normal examination process (e.g., a secrecy order, national security review, interference proceeding, petitions under 37 CFR 1.181, 182 or 183), the application will be treated special before and after such proceeding.

10. Final Disposition:
    The twelve month goal of this accelerated examination procedure ends with a final disposition. The mailing of a final Office action, a Notice of Allowance, the filing of a Notice of Appeal, or the filing of a Request for Continued Examination (RCE) is the final disposition.

If, during prosecution, a paper is not filed electronically using EFS-web, a reply is filed but is not fully responsive, the application is involved in an appeal, or a proceeding outside normal examination process, the application will still be examined expeditiously, however, the final disposition may occur more than twelve months from the filing of the application.

Any inquiry regarding this decision should be directed to Kenneth Wieder, Special Program Examiner, at (571) 272-2986.

Kenneth A. Wieder,
Quality Assurance Specialist
Technology Center 2600
Communications

UNITED STATES PATENT AND TRADEMARK OFFICE

UNITED STATES DEPARTMENT OF COMMERCE
United States Patent and Trademark Office
Address: COMMISSIONER FOR PATENTS
P.O. Box 1450
Alexandria, Virginia 22313-1450
www.uspto.gov

APPLICATION NO.	FILING DATE	FIRST NAMED INVENTOR	ATTORNEY DOCKET NO.	CONFIRMATION NO.
12/116,584	05/07/2008	Filomena Ferrara	FR920070131US1 (163-243)	7341

49267 7590 06/06/2008
KEUSEY, TUTUNJIAN & BITETTO, P.C.
20 CROSSWAYS PARK NORTH, SUITE 210
WOODBURY, NY 11797

EXAMINER

ART UNIT	PAPER NUMBER
3623	

MAIL DATE	DELIVERY MODE
06/06/2008	PAPER

Please find below and/or attached an Office communication concerning this application or proceeding.

The time period for reply, if any, is set in the attached communication.

UNITED STATES PATENT AND TRADEMARK OFFICE

Commissioner for Patents
United States Patent and Trademark Office
P.O. Box 1450
Alexandria, VA 22313-1450
www.uspto.gov

MAILED
FROM DIRECTORS OFFICE

JUN 05 2008

TECHNOLOGY CENTER 3600

KEUSEY, TUTUNJIAN & BITETTO, P.C.
20 CROSSWAYS PARK NORTH, SUITE 210
WOODBURY, NY 11797

In re application of
Ferrara et al.
Application No. 12/116,584
Filed: May 07, 2008
For: SYSTEMS AND METHODS FOR PREDICTING WAIT TIME FOR SERVICE TRANSACTIONS

: **DECISION ON PETITION**
: **TO MAKE SPECIAL FOR**
: **NEW APPLICATION**
: **UNDER 37 CFR 1.102**

This is a decision on the petition filed on May 07, 2008 to make the above-identified application special for accelerated examination procedure under 37 C.F.R. § 1.102(d).

The petition to make the application special is **DISMISSED**.

REGULATION AND PRACTICE

A grantable petition to make special under 37 C.F.R. § 1.102(d) and pursuant to the "Change to Practice for Petitions in Patent Applications to Make Special and for Accelerated Examination (AE)" published in the Federal Register on June 26, 2006 (71 Fed. Reg. 36323), must satisfy the following conditions:

I. Conditions Regarding the Application:

1. the application must be a non-reissue utility or design application filed under 37 CFR 1.111(a);

2. the application, the petition and the required fees must be filed electronically using the USPTO's electronic filing system (EFS), or EFS-web; if not filed electronically, a statement asserting that EFS and EFS-web were not available during the normal business hours.

3. at the time of filing, the application must be complete under 37 CFR 1.51 and in condition for examination;

4. the application must contain three or fewer independent claims and twenty or fewer total claims and the claims must be directed to a single invention.

II. Conditions Regarding the Petition:

The petition must:

1. be filed with the application;

2. include a statement that applicant agrees not to separately argue the patentability of any independent claim during any appeal in the application;

3. include a statement that applicant agrees to make an election without traverse in a telephone interview.

4. include a statement that applicant agrees to conduct such an interview when requested by the examiner.

5. include a statement, made based on a good faith belief, that a preexamination search in compliance with the following requirements, was conducted, including an identification of the field of search by United States class and subclass, where applicable, and for database searches, the search logic or chemical structure or sequence used as a query, the name of the file(s) searched and the database service, and the date of the search.

The preexamination search must:

5.1 involve U.S. patents and patent application publications, foreign patent documents, and non-patent literature, unless the applicant can justify with reasonable certainty that no references more pertinent than those already identified are likely to be found in the eliminated sources and includes such a justification with this statement;

5.2. be directed to the claimed invention and encompass all of the features of the claims, giving the claims the broadest reasonable interpretation;

5.3. encompass the disclosed features that may be claimed.

6. must provide in support of the petition an accelerated examination support document.

An accelerated examination support document must include:

6.1. an information disclosure statement (IDS) in compliance with 37 CFR 1.98 citing each reference deemed most closely related to the subject matter of each of the claims;

6.2. an identification of all the limitations in the claims that are disclosed by the reference specifying where the limitation is disclosed in the cited reference;

6.3. a detailed explanation of how each of the claims is patentable over the references cited with particularity required by 37 CFR 1.111(b) and (c);

6.4. a concise statement of the utility of the invention as defined in each of the independent claims (unless the application is a design application);

6.5. a showing of where each limitation of the claims finds support under 35 USC 112, first paragraph, in the written description of the specification. If applicable, the showing must also identify: (1) each means- (or step) plus-function claim element that invokes consideration under 35 USC 112, sixth paragraph; and (2) the structure, material, or acts in the specification that corresponds to each means- (or step) plus-

function claim element that invokes consideration under 35 USC 112, sixth paragraph; if the application claims the benefit of one or more applications under title 35, United States Code, the showing must also include where each limitation of the claims finds support under 35 USC 112, first paragraph, in each such application in which such supports exists;

6.6. an identification of any cited references that may be disqualified under 35 USC 103(c).

REVIEW OF FACTS

The petition in this case fails to comply with condition II.5.1, II.5.2, and II.6.5.

As per Condition II.5.1, the preexamination search must involve U.S. patents and patent application publications, foreign patent documents, and non-patent literature, unless the applicant can justify with reasonable certainty that no references more pertinent than those already identified are likely to be found in the eliminated sources and includes such a justification with this statement. The non-patent literature search is not adequate.

Per the accelerated examination guidelines, part I, item 8, subsection 4, a text search of the suggested non-patent literature (NPL) resources from the current USPTO search templates found at

http://www.uspto.gov/web/patents/searchtemplates/searchtemplates.htm

This application has been classified in 705/8. In order to comply with this requirement, follow the search template guidance provided by

http://www.uspto.gov/web/patents/searchtemplates/class705-008.htm

As per Condition II.5.2, the preexamination search must be directed to the claimed invention and encompass all of the features of the claims, giving the claims the broadest reasonable interpretation.

Section 9 (c) of applicant's AE support document asserts, for claim 1, that estimating waiting time based on combining two weighted estimates where the weighted estimates are generated from historical data and a time period is a reason for patentability, but this feature is not included in any of the text searches. For example, a search including time periods of days, months or years may improve the results. Broadest reasonable interpretation could be shown in a text search by the use of synonyms. In this current limitation, "predict$" and "forecast$", would be good search terms in addition to "estimat$".

Also, the term "service" overly narrows the search to that term. For example, if a reference had a waiting time for the help desk, the term "service" does not appear, but clearly a service is provided.

As a starting point for a possible search string for claim 1, the following is provided. Plurals on.

Line 1 (predict$ or forecast$ or estimat$) near5 (wait$ or delay$ or wait$ near5 time)
Line 2 time near5 day
Line 3 time near5 month
Line 4 time near5 year
Line 5 2 and 3 and 4
Line 6 1 and 5
Try line 6 with operator "same" depending on results

This is just a sample starting point and merely copying this search will not necessarily comply with the requirement. Incorporating the sample search ideas into the current search may be useful. It is assumed that an actual search would be further developed and dynamically evolve based upon results. Additional guidance regarding the proper manner of performing and documenting a preexamination search may be found on the following web site: http://www.uspto.gov/web/patents/accelerated/

In regards to condition II.6.5, an accelerated examination support document must include a showing of where each limitation of the claims finds support under 35 USC 112, first paragraph, in the written description of the specification.

Applicant's showing of support does not show where each limitation is in the specification. It is a very broad recitation. Applicant may want to use a similar format as was used in section 9(B) for showing limitations disclosed by the references, but showing the 35 USC 112, 1st support for each limitation of the claims.

The petition fails to meet the required conditions to be accorded special status under the accelerated examination procedure.

DECISION

For the above stated reasons, the petition is **DISMISSED**. The application will therefore be taken up by the examiner for action in its regular turn.

Petitioner is given a single opportunity to perfect the petition. Any request for reconsideration of this decision must be submitted within one (1) month or thirty (30) days, whichever is longer, from the date of this decision. No extensions of time will be granted under 37 CFR 1.136(a) if the request is to be considered

timely. Any request for reconsideration must address the deficiencies indicated above.

Petitioner is reminded that, upon granting of the special status of the application on request for reconsideration, the application will be processed expeditiously. However, due to the dismissal of the instant petition, examination may not be completed within twelve months of the filing date of the application.

Any inquiry regarding this decision should be directed to Robert Weinhardt, Business Practice Specialist, at (571) 272-6633. Inquiries may also be directed to Michael Cuff at (571) 272-6778.

Robert A. Weinhardt,
Business Practice Specialist
Technology Center 3600

RW/MAC/06/03/08

UNITED STATES PATENT AND TRADEMARK OFFICE

UNITED STATES DEPARTMENT OF COMMERCE
United States Patent and Trademark Office
Address: COMMISSIONER FOR PATENTS
P.O. Box 1450
Alexandria, Virginia 22313-1450
www.uspto.gov

APPLICATION NO.	FILING DATE	FIRST NAMED INVENTOR	ATTORNEY DOCKET NO.	CONFIRMATION NO.
12/116,584	05/07/2008	Filomena Ferrara	FR920070131US1 (163-243)	7341

49267 7590 07/31/2008
KEUSEY, TUTUNJIAN & BITETTO, P.C.
20 CROSSWAYS PARK NORTH, SUITE 210
WOODBURY, NY 11797

EXAMINER

ART UNIT	PAPER NUMBER
3629	

MAIL DATE	DELIVERY MODE
07/31/2008	PAPER

Please find below and/or attached an Office communication concerning this application or proceeding.

The time period for reply, if any, is set in the attached communication.

UNITED STATES PATENT AND TRADEMARK OFFICE

Commissioner for Patents
United States Patent and Trademark Office
P.O. Box 1450
Alexandria, VA 22313-1450
www.uspto.gov

MAILED
FROM DIRECTORS OFFICE

JUL 31 2008

TECHNOLOGY CENTER 3600

KEUSEY, TUTUNJIAN & BITETTO, P.C.
20 CROSSWAYS PARK NORTH, SUITE 210
WOODBURY NY 11797

In re application of
Ferrara et al.
Application No. 12/116,584
Filed: May 7, 2008
For: SYSTEMS AND METHODS FOR PREDICTING WAIT TIME FOR SERVICE TRANSACTIONS

: **DECISION ON PETITION**
: **TO MAKE SPECIAL FOR**
: **NEW APPLICATION**
: **UNDER 37 CFR 1.102**

This is a decision on the renewed petition filed on July 7, 2008 to make the above-identified application special for accelerated examination procedure under 37 C.F.R. § 1.102(d).

The petition to make the application special is **DENIED**.

A petition to make special was filed in the above-identified application under 37 CFR 1.102(d) on May 7, 2008. That petition was dismissed in a decision mailed June 6, 2008 wherein a non-extendible period of 1 (one) month or 30 (thirty) days, whichever was longer, was set to request reconsideration.

The reasons for the dismissal included a finding of an inadequate Search Document and an inadequate Support Document.

With the updated Support Document filed July 7, 2008, applicant has successfully remedied the issues raised in the dismissal with respect to the originally filed Support Document. However, with respect to the issues raised regarding the originally filed Search Document, these issues have not been sufficiently addressed by the updated Search Document filed July 7, 2008.

Specifically, the dismissal indicated that the search involve non-patent literature according to the search template of the area that the application is classified in unless applicant can justify with reasonable certainty that no references more pertinent than those already identified are likely to be found in the eliminated sources and include such justification with this statement. The dismissal further provided the link to the specific search template associated with the classification of the application, where the specific search template lists several files required for the template search. To name a few, some of the files include the following:

ABI/INFORM
Business & IndustryTM (B&I)
Business Wire
Dialog Global Reporter
EBSCOhost Research Databases
Gale Group Computer DatabaseTM
Gale Group GlobalbaseTM
Gale Group New Product Announcements/Plus (NPA/Plus)
Gale Group Newsletter DatabaseTM
Gale Group PROMT
Gale Group Trade & Industry DatabaseTM
Inside Conferences
Inspec (The Database for Physics, Electronics and Computing)
JSTOR Journals
McGraw-Hill Companies Publications Online
PR Newswire
ProQuest Direct
TecInfoSource (formerly SoftBase: Reviews, Companies, and Products)
Wall Street Journal Abstracts
Wilson Applied Science & Technology Abstracts

However, in the updated Search Document it is not clear if Applicant met the non-patent literature requirement as no files were listed pertaining to the WestLaw Database Service. For example, page 3 of the updated Search Document indicates "Non Patent Literature" was searched in the WestLaw Database Service, but fails to indicate the specific names of the non-patent Literature files that were searched, which is a requirement of the preexamination search.

While Applicant's argument is noted that Applicant is not required to search every non-patent literature database in the search templates, it is noted that the nature of business methods applications requires a thorough search in non-patent literature pertinent to the features of the invention. The Dialog databases listed in the search templates have been grouped according to their business and technology-related content and identified as having subject matter relevant and pertinent to their associated USPTO classification. As such, a search of Dialog databases associated with the classification of the invention is considered an important search. Since Applicant did not list any names for the non-patent literature databases searched in WestLaw, it is not clear to what extent Applicant searched the Dialog databases listed in the search template.

Additionally, the updated Search Document does not include a statement justifying with reasonable certainty that no references more pertinent than those already identified are likely to be found in the eliminated sources.

For the above stated reasons, the petition is **DENIED**. The application will therefore be taken up by the examiner for action in its regular turn.

Petitioner is reminded that a only single opportunity to perfect the petition is given. Therefore, further petitions for accelerated examination in this application will not be entertained.

Any inquiry regarding this decision should be directed to Business Practice Specialist C. Michelle Tarae at (571) 272-6727.

C. Michelle Tarae

C. Michelle Tarae
Business Practice Specialist
Technology Center 3600

CMT7/29/08

UNITED STATES PATENT AND TRADEMARK OFFICE

Commissioner for Patents
United States Patent and Trademark Office
P.O. Box 1450
Alexandria, VA 22313-1450
www.uspto.gov

HASSE & NESBITT LLC
8837 CHAPEL SQUARE DRIVE
SUITE C
CINCINNATI, OH 45249

COPY MAILED

DEC 07 2009

OFFICE OF PETITIONS

In re Application of :
Rodrick A. Herdman :
Application No. 12/116,592 : ON PETITION
Filed: May 7, 2008 :
Attorney Docket No. EZL-009M

This is a decision on the petition, filed December 4, 2009 under 37 CFR 1.313(c)(2) to withdraw the above-identified application from issue after payment of the issue fee.

The petition is **GRANTED**.

The above-identified application is withdrawn from issue for consideration of a submission under 37 CFR 1.114 (request for continued examination). See 37 CFR 1.313(c)(2).

Petitioner is advised that the issue fee paid on November 3, 2009 in the above-identified application cannot be refunded. If, however, the above-identified application is again allowed, petitioner may request that it be applied towards the issue fee required by the new Notice of Allowance.[1]

Telephone inquiries should be directed to Irvin Dingle at (571) 272-3210.

This matter is being referred to Technology Center AU 3673 for processing of the request for continued examination under 37 CFR 1.114 and for consideration of the concurrently filed Information Disclosure Statement.

/Irvin Dingle/
Irvin Dingle
Petitions Examiner
Office of Petitions

---

[1] The request to apply the issue fee to the new Notice may be satisfied by completing and returning the new Issue Fee Transmittal Form PTOL-85(b), which includes the following language thereon: Commissioner for Patents is requested to apply the Issue Fee and Publication Fee (if any) or re-apply any previously paid issue fee to the application identified above. Petitioner is advised that, whether a fee is indicated as being due or not, the Issue Fee Transmittal Form **must** be completed and timely submitted to avoid abandonment. Note the language in bold text on the first page of the Notice of Allowance and Fee(s) Due (PTOL-85).

UNITED STATES PATENT AND TRADEMARK OFFICE

UNITED STATES DEPARTMENT OF COMMERCE
United States Patent and Trademark Office
Address: COMMISSIONER FOR PATENTS
P.O. Box 1450
Alexandria, Virginia 22313-1450
www.uspto.gov

APPLICATION NO.	FILING DATE	FIRST NAMED INVENTOR	ATTORNEY DOCKET NO.	CONFIRMATION NO.
12/116,608	05/07/2008	Ying Li	YOR920070482US2	7389

48915 7590 08/07/2008
CANTOR COLBURN LLP-IBM YORKTOWN
20 Church Street
22nd Floor
Hartford, CT 06103

EXAMINER
CALDWELL, ANDREW T

ART UNIT	PAPER NUMBER
2142	

MAIL DATE	DELIVERY MODE
08/07/2008	PAPER

Please find below and/or attached an Office communication concerning this application or proceeding.

The time period for reply, if any, is set in the attached communication.

UNITED STATES PATENT AND TRADEMARK OFFICE

Commissioner for Patents
United States Patent and Trademark Office
P.O. Box 1450
Alexandria, VA 22313-1450
www.uspto.gov

CANTOR COLBURN LLP-IBM YORKTOWN
20 Church Street
22nd Floor
Hartford CT 06103

In re Application of: Ying LI, et al. Serial No.: 12/116,608 Filed: May 07, 2008 Docket: YOR920070482US2 Title: SYSTEMS, METHODS AND COMPUTER PROGRAM PRODUCTS FOR IMPROVING PLACEMENT PERFORMANCE OF MESSAGE TRANSFORMS BY EXPLOITING AGGRESSIVE REPLICATION	DECISION ON PETITION TO MAKE SPECIAL FOR NEW APPLICATION UNDER 37 C.F.R. § 1.102 & M.P.E.P. § 708.02

This is a decision on petition filed on Aug 06, 2008 (originally filed May 07, 2008) to make the above-identified application special for accelerated examination procedure under 37 C.F.R. § 1.102(d).

The preexamination search document filed July 30, 2008 clarifies that the classification searches were in compliance with MPEP 719.05, i.e. *classification search* is defined as a complete search of all the documents in a particular subclass, and it is not limited by any text query or other means.

The examination support document field Aug, 06, 2008 remedies the deficiencies regarding the discussions of patentability discussion and claim support under 35 USC 112, first paragraph for both the instant applicant 12/116,608 and parent application **11/943150**.

The petition to make the application special is **GRANTED**.

The application is eligible for accelerated examination and the petition complies with the conditions for granting the application special status pursuant to the "Change to Practice for Petitions in Patent Applications to Make Special and for Accelerated Examination" published June 26, 2006, in the Federal Register. (71 Fed. Reg. 36323).

The prosecution of the instant application will be conducted expeditiously according to the following guidelines.

1. The application will be docketed to an examiner and taken up for action within two weeks of the date of this decision.

2. Restriction Practice:
   If the examiner determines that the claims are not directed to a single invention, a telephone request to elect one single invention will be made pursuant to MPEP 812.01. As a prerequisite to the grant of this petition, the applicant has agreed to make an oral election, by telephone, without traverse. If the applicant refuses to make an election without traverse, or the examiner cannot reach the applicant after a reasonable effort, the examiner will treat the first claimed invention (invention defined by claim 1) as having being constructively elected without traverse for examination.

3. Office action:
   If it is determined that, after appropriate consultation, there is a potential rejection or any other issue to be addressed, the examiner will telephone the applicant and arrange an interview to discuss and resolve the issue. An Office action, other than a Notice of Allowance and Fee(s) Due (Notice of Allowance), will not be issued unless either: 1) an interview was conducted but did not result in agreed to action that places the application in condition for allowance, or, 2) a determination is made that an interview would be unlikely to result in the application being placed in condition for allowance, and 3) an internal conference has been held to review any rejection of any claim.

4. Time for Reply:
   An Office action other than a Notice of Allowance or a final Office action will set a shortened statutory period of one month or thirty days, whichever is longer, for reply with no extension of time available under 37 CFR 1.136(a). Failure to timely file a reply within this non-extendible period for reply will result in the abandonment of the application.

5. Reply by Applicant:
   A timely reply to an Office action other than the Notice of Allowance must be submitted electronically via EFS or EFS-web and limited to addressing the rejections, objections and requirement made. Any amendment that attempts to: 1) add claims which would result in more than three pending independent claims or more than twenty pending total claims; 2) present claims not encompassed by the pre-examination search or an updated accelerated examination support document; or 3) present claims that are directed a non-elected invention or an invention other than that previously claimed and examined in the application, will be treated as not fully responsive and will not be entered.

   For any amendment to the claims (including any new claim) that is not encompassed by the accelerated examination support document, applicant must provide an updated accelerated examination support document that encompasses the amended or new claims at the time of filing of the amendment.

To proceed expeditiously with the examination, it is recommended that a reply with amendments made to any claim or with any new claim being added be accompanied by an updated accelerated examination support document or a statement explaining how the amended or new claim is supported by the original accelerated examination support document.

6. Information Disclosure Statement (IDS):
   Any IDS filed during prosecution must be submitted electronically via EFS or EFS-web, accompanied by an updated accelerated examination support document, and be in compliance with 37 CFR 1.97 and 1.98.

7. Post-Allowance Processing:
   To expedite processing of the allowed application into a patent, the applicant must: 1) pay the required fees within one month of the date of the Notice of Allowance, and 2) not file any post allowance papers not required by the Office. In no event may the issue fee be paid and accepted later than three months from the date of the Notice of Allowance.

8. After-Final and Appeal Procedures:
   To expedite prosecution, after receiving the final Office action, applicant must: 1) promptly file a notice of appeal, an appeal brief and appeal fees; and 2) not request a pre-appeal brief conference.

   Any amendment, affidavit or other evidence filed after final Office action must comply with applicable rules and the requirements outlined in numbered paragraphs 5 and 6 above.

   On appeal, the application will proceed according to normal appeal procedures. After appeal, the application will again be treated special.

9. Proceedings Outside the Normal Examination Process:
   If the application becomes involved in a proceeding that is outside the normal examination process (e.g., a secrecy order, national security review, interference proceeding, petitions under 37 CFR 1.181, 182 or 183), the application will be treated special before and after such proceeding.

10. Final Disposition:
    The twelve-month goal of this accelerated examination procedure ends with a final disposition. The mailing of a final Office action, a Notice of Allowance, the filing of a Notice of Appeal, or the filing of a Request for Continued Examination (RCE) is the final disposition.

If, during prosecution, a paper is not filed electronically using EFS-web, a reply is filed but is not fully responsive, the application is involved in an appeal, or a proceeding outside normal examination process, the application will still be examined expeditiously, however, the final disposition may occur more than twelve months from the filing of the application. In addition,

Applicant is reminded that due to the dismissal of the previous petition submission, examination may not be completed within twelve months of the filing date of the application.

Any inquiry regarding this decision should be directed the undersigned whose telephone number is (571) 272-4147.

If attempts to reach the undersigned by telephone are unsuccessful, Tod Swann, Quality Assurance Specialist, can be reached at (571) 272-3612.

/Kim Huynh/

Kim Huynh
Quality Assurance Specialist
Technology Center 2100
Computer Architecture, Software and Information Security

UNITED STATES PATENT AND TRADEMARK OFFICE

UNITED STATES DEPARTMENT OF COMMERCE
United States Patent and Trademark Office
Address: COMMISSIONER FOR PATENTS
P.O. Box 1450
Alexandria, Virginia 22313-1450
www.uspto.gov

APPLICATION NO.	FILING DATE	FIRST NAMED INVENTOR	ATTORNEY DOCKET NO.	CONFIRMATION NO.
12/116,625	05/07/2008	Yosuke TOMITA	P34436	7420

7055 7590 06/23/2010
GREENBLUM & BERNSTEIN, P.L.C.
1950 ROLAND CLARKE PLACE
RESTON, VA 20191

EXAMINER
VO, PETER DUNG BA

ART UNIT	PAPER NUMBER
3714	

NOTIFICATION DATE	DELIVERY MODE
06/23/2010	ELECTRONIC

Please find below and/or attached an Office communication concerning this application or proceeding.

The time period for reply, if any, is set in the attached communication.

Notice of the Office communication was sent electronically on above-indicated "Notification Date" to the following e-mail address(es):

gbpatent@gbpatent.com
pto@gbpatent.com

UNITED STATES PATENT AND TRADEMARK OFFICE

Commissioner for Patents
United States Patent and Trademark Office
P.O. Box 1450
Alexandria, VA 22313-1450
www.uspto.gov

GREENBLUM & BERNSTEIN, P.L.C.
1950 ROLAND CLARKE PLACE
RESTON VA 20191

In re Application of	:	
TOMITA, YOSUKE	:	DECISION ON REQUEST TO
Application No. 12/116,625	:	PARTICIPATE IN PATENT
Filed: May 7, 2008	:	PROSECUTION HIGHWAY
Attorney Docket No. P34436	:	PROGRAM AND PETITION
For: ONLINE GAME SERVER, ONLINE GAME PROGRAM PRODUCT AND GAME APPARATUS	:	37 CFR 1.102(d)

This is a decision on the request to participate in the Patent Prosecution Highway (PPH) program and the petition under 37 CFR 1.102(d), filed June 21, 2010 to make the above-identified application special.

The request and petition are **GRANTED**.

A grantable request to participate in the PPH pilot program and petition to make special require:

(1) The U.S. application must validly claim priority under 35 U.S.C. 119(a) to one or more applications filed in the JPO;
(2) Applicant must submit a copy of the allowable/patentable claim(s) from the JPO application(s) along with an English translation thereof and a statement that the English translation is accurate;
(3) All the claims in the U.S. application must sufficiently correspond or be amended to sufficiently correspond to the allowable/patentable claim(s) in the JPO application(s);
(4) Examination of the U.S. application has not begun;
(5) Applicant must submit a copy of all the office actions from each of the JPO application(s) containing the allowable/patentable claim(s) along with an English translation thereof and a statement that the English translation is accurate and;
(6) Applicant must submit an IDS listing the documents cited by the JPO examiner in the JPO office action along with copies of documents except U.S. patents or U.S. patent application publications.

In light of the petition being properly submitted, the request to participate in the PPH program and the petition comply with the above requirements. Accordingly, the above-identified application has been accorded "special" status.

The applicant is encouraged to cite and submit all relevant prior art references, if any, to facilitate examination in this application.

Telephone inquiries concerning this decision should be directed to Henry C. Yuen at 571-272-4856. All other inquiries concerning the examination or status of the application should be directed to Peter Vo, the SPE of Art Unit 3714, and 571-272-26681 for Class 463/042 and also accessible in the PAIR system at http://www.uspto.gov/ebc.index.html.

Petition is **granted**.

/Henry C. Yuen/

Henry C. Yuen, Special Programs Examiner
Technology Center 3700 – Mechanical Engineering,
Manufacturing and Products
571-272-4856

UNITED STATES PATENT AND TRADEMARK OFFICE

UNITED STATES DEPARTMENT OF COMMERCE
United States Patent and Trademark Office
Address: COMMISSIONER FOR PATENTS
P.O. Box 1450
Alexandria, Virginia 22313-1450
www.uspto.gov

APPLICATION NO.	FILING DATE	FIRST NAMED INVENTOR	ATTORNEY DOCKET NO.	CONFIRMATION NO.
12/116,626	05/07/2008	Kangguo Cheng	FIS920070312US2	7421

29371 7590 08/28/2008
CANTOR COLBURN LLP - IBM FISHKILL
20 Church Street
22nd Floor
Hartford, CT 06103

EXAMINER
MENZ, LAURA MARY

ART UNIT	PAPER NUMBER
2813	

MAIL DATE	DELIVERY MODE
08/28/2008	PAPER

Please find below and/or attached an Office communication concerning this application or proceeding.

The time period for reply, if any, is set in the attached communication.

UNITED STATES PATENT AND TRADEMARK OFFICE

Commissioner for Patents
United States Patent and Trademark Office
P.O. Box 1450
Alexandria, VA 22313-1450
www.uspto.gov

CANTOR COLBURN LLP - IBM FISHKILL
20 Church Street, 22nd Floor
Hartford, CT 06103

In re Application of: CHENG *et al.* Serial No.: 12/116,626 Filed: May 07, 2008 Title: **METHODS INVOLVING SILICON-ON-INSULATOR TRENCH MEMORY WITH IMPLANTED PLATE**	DECISION ON PETITION TO MAKE SPECIAL FOR NEW APPLICATION UNDER 37 C.F.R. § 1.102 & M.P.E.P. § 708.02

This is a decision on the petition filed on May 07, 2008, to make the above-identified application special for accelerated examination procedure under 37 C.F.R. § 1.102(d).

The petition to make the application special is **DISMISSED**.

REGULATION AND PRACTICE

A grantable petition to make special under 37 C.F.R. § 1.102(d) and pursuant to the "Change to Practice for Petitions in Patent Applications to Make Special and for Accelerated Examination" published in the Federal Register on June 26, 2006 (71 Fed. Reg. 36323), must satisfy the following conditions:

I. Conditions Regarding the Application:

1. the application must be a non-reissue utility or design application filed under 37 CFR 1.111(a);
2. the application, the petition and the required fees must be filed electronically using the USPTO's electronic filing system (EFS), or EFS-web; if not filed electronically, a statement asserting that EFS and EFS-web were not available during the normal business hours.
3. at the time of filing, the application must be complete under 37 CFR 1.51 and in condition for examination;
4. the application must contain three or fewer independent claims and twenty or fewer total claims and the claims must be directed to a single invention.

II. Conditions Regarding the Petition:

The petition must:

1. be filed with the application;

2. include a statement that applicant agrees not to separately argue the patentability of any dependent claim during any appeal in the application;

3. include a statement that applicant agrees to make an election without traverse in a telephone interview.

4. include a statement that applicant agrees to conduct such an interview when requested by the examiner.

5. include a statement, made based on a good faith belief, that a preexamination search in compliance with the following requirements, was conducted, including an identification of the field of search by United States class and subclass, where applicable, and for database searches, the search logic or chemical structure or sequence used as a query, the name of the file(s) searched and the database service, and the date of the search.

The preexamination search must:

5.1 involve U.S. patents and patent application publications, foreign patent documents, and non-patent literature, unless the applicant can justify with reasonable certainty that no references more pertinent than those already identified are likely to be found in the eliminated sources and includes such a justification with this statement;

5.2. be directed to the claimed invention and encompass all of the features of the claims, giving the claims the broadest reasonable expectation;

5.3. encompass the disclosed features that may be claimed.

6. must provide in support of the petition an accelerated examination support document. An accelerated examination support document must include:

6.1. an information disclosure statement (IDS) in compliance with 37 CFR 1.98 citing each reference deemed most closely related to the subject matter of each of the claims;

6.2. an identification of all the limitations in the claims that are disclosed by the reference specifying where the limitation is disclosed in the cited reference;

6.3. a detailed explanation of how each of the claims are patentable over the references cited with particularity required by 37 CFR 1.111(b) and (c);

6.4. a concise statement of the utility of the invention as defined in each of the independent claims (unless the application is a design application);

6.5. a showing of where each limitation of the claims finds support under 35 USC 112, first paragraph, in the written description of the specification. If applicable, the showing must also identify: (1) each means- (or step) plus-function claim element that invokes consideration under 35 UDC 112, sixth paragraph; and (2) the structure, material, or acts in the specification that corresponds to each means- (or step) plus-function claim element that invokes consideration under 35 UDC 112, sixth paragraph; if the application claims the benefit of one or more applications under title 35, United States Code, the showing must also include where each limitation of the claims finds support under 35 USC 112, first paragraph, in each such application in which such supports exists;

6.6. an identification of any cited references that may be disqualified under 35 USC 103(c).

REVIEW OF FACTS

The conditions I.1-4; II.5, 5.1-5.3, 6, 6.1-6.4 and 6.6, above are considered to have been met. However, the petition fails to comply with conditions section II, subsection 6.5, above. Therefore, the petition fails to meet the required conditions to be accorded special status under the accelerated examination procedure.

Regarding the requirements of section II, subsection 6.5, the examination support document must include a showing of where **each limitation** of the application claims finds support under 35 USC 112, first paragraph, in the written description of the specification. The examination support document includes a reference to paragraphs 12 and 13 as showing support under 35 USC 112, first paragraph. However, these paragraphs merely describe figures 1 and 2, and do not clearly show where **each limitation** of the application claims finds support under 35 USC 112, first paragraph. It is suggested that applicant follow the technique used to show where the limitations of the references sited can be found, such as by page and line number where the limitations can be found.

DECISION

For the above-stated reasons, the petition is **dismissed**. The application will therefore be taken up by the examiner for action in its regular turn.

Petitioner is given a single opportunity to perfect the petition. Any request for reconsideration of this decision must be submitted within 1 (one) month or 30 (thirty) days, whichever is longer, from the date of this decision in order to be considered timely. Any request for reconsideration must address the deficiencies indicated above.

Petitioner is reminded that, upon granting of the special status of the application on request for reconsideration, the application will be processed expeditiously. However, due to the dismissal of the instant petition, examination may not be completed within twelve months of the filing date of the application.

Any inquiry regarding this decision should be directed to Clayton E. LaBalle, Quality Assurance Specialist (QAS), at (571) 272-1594.

Clayton E. LaBalle

Clayton E. LaBalle, QAS
Technology Center 2800
Semiconductors, Electrical and Optical
Systems and Components

UNITED STATES PATENT AND TRADEMARK OFFICE

UNITED STATES DEPARTMENT OF COMMERCE
United States Patent and Trademark Office
Address: COMMISSIONER FOR PATENTS
P.O. Box 1450
Alexandria, Virginia 22313-1450
www.uspto.gov

APPLICATION NO.	FILING DATE	FIRST NAMED INVENTOR	ATTORNEY DOCKET NO.	CONFIRMATION NO.
12/116,626	05/07/2008	Kangguo Cheng	FIS920070312US2	7421

29371 7590 01/26/2009
CANTOR COLBURN LLP - IBM FISHKILL
20 Church Street
22nd Floor
Hartford, CT 06103

EXAMINER
MENZ, LAURA MARY

ART UNIT	PAPER NUMBER
2813	

NOTIFICATION DATE	DELIVERY MODE
01/26/2009	ELECTRONIC

Please find below and/or attached an Office communication concerning this application or proceeding.

The time period for reply, if any, is set in the attached communication.

Notice of the Office communication was sent electronically on above-indicated "Notification Date" to the following e-mail address(es):

usptopatentmail@cantorcolburn.com

UNITED STATES PATENT AND TRADEMARK OFFICE

Commissioner for Patents
United States Patent and Trademark Office
P.O. Box 1450
Alexandria, VA 22313-1450
www.uspto.gov

CANTOR COLBURN LLP - IBM FISHKILL
20 Church Street, 22nd Floor
Hartford, CT 06103

In re Application of:
CHENG *et al.*
Serial No.: 12/116,626
Filed: May 07, 2008
Title: **METHODS INVOLVING SILICON-ON-INSULATOR TRENCH MEMORY WITH IMPLANTED PLATE**

DECISION ON PETITION TO MAKE SPECIAL FOR NEW APPLICATION UNDER 37 CFR 1.102

This decision is a reply to the communication filed September 05, 2008, and supplemented on December 18, 2008. The communication and supplement are being treated as a petition requesting reconsideration of the previous decision of August 28, 2008, dismissing the petition to make special under 37 C.F.R. §1.102(d) filed May 07, 2008.

The petition to make the application special is GRANTED.

The application is eligible for accelerated examination and the petition complies with the conditions for granting the application special status pursuant to the "Change to Practice for Petitions in Patent Applications to Make Special and for Accelerated Examination" published June 26, 2006, in the Federal Register. (71 Fed. Reg. 36323).

The prosecution of the instant application will be conducted expeditiously according to the following guidelines.

1. The application will be docketed to an examiner and taken up for action within two weeks of the date of this decision.

2. Restriction Practice:
   If the examiner determines that the claims are not directed to a single invention, a telephone request to elect one single invention will be made pursuant to MPEP 812.01. As a prerequisite to the grant of this petition, the applicant has agreed to make an oral election, by telephone, without traverse. If the applicant refuses to make an election without traverse, or the examiner cannot reach the applicant after a reasonable effort, the examiner will treat the first claimed invention (invention defined by claim 1) as having being constructively elected without traverse for examination.

3. Office action:
   If it is determined that, after appropriate consultation, there is a potential rejection or any other issue to be addressed, the examiner will telephone the applicant and arrange an interview to discuss and resolve the issue. An Office action, other than a Notice of Allowance and Fee(s) Due (Notice of Allowance), will not be issued unless either: 1) an interview was conducted but did not result in agreed to action that places the application in condition for allowance, or, 2) a determination is made that an interview would be unlikely to result in the application being placed in condition for allowance, and 3) an internal conference has been held to review any rejection of any claim.

4. Time for Reply:
   An Office action other than a Notice of Allowance or a final Office action will set a shortened statutory period of one month or thirty days, whichever is longer, for reply with no extension of time available under 37 C.F.R. §1.136(a). Failure to timely file a reply within this non-extendible period for reply will result in the abandonment of the application.

5. Reply by Applicant:
   A timely reply to an Office action other than the Notice of Allowance must be submitted electronically via EFS or EFS-web and limited to addressing the rejections, objections and requirement made. Any amendment that attempts to: 1) add claims which would result in more than three pending independent claims or more than twenty pending total claims; 2) present claims not encompassed by the pre-examination search or an updated accelerated examination support document; or 3) present claims that are directed a non-elected invention or an invention other than that previously claimed and examined in the application, will be treated as not fully responsive and will not be entered.

   For any amendment to the claims (including any new claim) that is not encompassed by the accelerated examination support document, applicant must provide an updated accelerated examination support document that encompasses the amended or new claims at the time of filing of the amendment.

   To proceed expeditiously with the examination, it is recommended that a reply with amendments made to any claim or with any new claim being added be accompanied by an updated accelerated examination support document or a statement explaining how the amended or new claim is supported by the original accelerated examination support document.

6. Information Disclosure Statement (IDS):
   Any IDS filed during prosecution must be submitted electronically via EFS or EFS-web, accompanied by an updated accelerated examination support document, and be in compliance with 37 C.F.R. §1.97 and §1.98.

7. Post-Allowance Processing:
   To expedite processing of the allowed application into a patent, the applicant must: 1) pay the required fees within one month of the date of the Notice of Allowance, and 2) not file any post allowance papers not required by the Office. In no event may the issue fee be paid and accepted later than three months from the date of the Notice of Allowance.

8. After-Final and Appeal Procedures:
   To expedite prosecution, after receiving the final Office action, applicant must: 1) promptly file a notice of appeal, an appeal brief and appeal fees; and 2) not request a pre-appeal brief conference.

   Any amendment, affidavit or other evidence filed after final Office action must comply with applicable rules and the requirements outlined in numbered paragraphs 5 and 6 above.

   On appeal, the application will proceed according to normal appeal procedures. After appeal, the application will again be treated special.

9. Proceedings Outside the Normal Examination Process:
   If the application becomes involved in a proceeding that is outside the normal examination process (e.g., a secrecy order, national security review, interference proceeding, petitions under 37 C.F.R. §1.181, §1.182 or §1.183), the application will be treated special before and after such proceeding.

10. Final Disposition:
    The twelve-month goal of this accelerated examination procedure ends with a final disposition. The mailing of a final Office action, a Notice of Allowance, the filing of a Notice of Appeal, or the filing of a Request for Continued Examination (RCE) is the final disposition. However, due to the dismissal of the instant petition, examination may not be completed within twelve months of the filing date of the application.

If, during prosecution, a paper is not filed electronically using EFS-web, a reply is filed but is not fully responsive, the application is involved in an appeal, or a proceeding outside normal examination process, the application will still be examined expeditiously, however, the final disposition may occur more than twelve months from the filing of the application.

Any inquiry regarding this decision should be directed to the undersigned at (571) 272-1594.

Clayton E. LaBalle, T-QAS
Technology Center 2800 - Semiconductors,
Electrical & Optical Systems & Components

UNITED STATES PATENT AND TRADEMARK OFFICE

Commissioner for Patents
United States Patent and Trademark Office
P.O. Box 1450
Alexandria, VA 22313-1450
www.uspto.gov

BAKER BOTTS L.L.P.
30 ROCKEFELLER PLAZA
44TH FLOOR
NEW YORK NY 10112-4498

COPY MAILED

APR 27 2009

OFFICE OF PETITIONS

In re Application of	:	
Jose Rodriguez et al.	:	
Application No. 12/116,647	:	DECISION ON PETITION
Filed: May 7, 2008	:	TO WITHDRAW
Attorney Docket No. 069762.0115	:	FROM RECORD
	:	

This is a decision on the Request to Withdraw as attorney or agent of record under 37 C.F.R. § 1.36(b), filed March 19, 2009.

The request is **NOT APPROVED**.

A grantable request to withdraw as attorney/agent of record must be signed by every attorney/agent seeking to withdraw or contain a clear indication that one attorney is signing on behalf of another/others.

The Office cannot approve the request at this time since the reasons provided do not meet any of the conditions under the mandatory or permissive categories enumerated in 37 CFR 10.40. Section 10.40 of Title 37 of the Code of Federal Regulation states, "[a] practitioner shall not withdraw from employment in a proceeding before the Office without permission from the Office[.]" More specifically, 37 CFR 10.40 states, "[i]f paragraph (b) of this section is not applicable, a practitioner may not request permission to withdraw in matter pending before the Office unless such request or such withdrawal is" for one the permissive reasons listed in 37 CFR 10.40(c). The reason set forth in the request "client relationship terminated" is not specific enough to meet any of the conditions set forth in 37 CFR 10.40.

All future communications from the Office will continue to be directed to the above-listed address until otherwise notified by applicant.

Telephone inquiries concerning this decision should be directed to JoAnne Burke at 571-272-4584.

Ramesh Krishnamurthy
Petitions Examiner
Office of Petitions

cc: Mr. and Mrs. Jose Rodriques
1108 Sugar Maple Drive
Greenwood, IN 46143

UNITED STATES PATENT AND TRADEMARK OFFICE

Commissioner for Patents
United States Patent and Trademark Office
P.O. Box 1450
Alexandria, VA 22313-1450
www.uspto.gov

BAKER BOTTS L.L.P.
30 ROCKEFELLER PLAZA
44TH FLOOR
NEW YORK NY 10112-4498

MAILED

JUL 21 2009

OFFICE OF PETITIONS

In re Application of	:	
Jose Rodriguez et al.	:	
Application No. 12/116,647	:	DECISION ON PETITION
Filed: May 7, 2008	:	TO WITHDRAW
Attorney Docket No. 069762.0115	:	FROM RECORD
	:	

This is a decision on the Request to Withdraw as attorney or agent of record under 37 CFR § 1.36(b), filed May 6, 2009.

The request is **APPROVED**.

A grantable request to withdraw as attorney/agent of record must be signed by every attorney/agent seeking to withdraw or contain a clear indication that one attorney is signing on behalf of another/others.

The request was signed by Eric J. Faragi on behalf of all attorneys of record who are associated with Customer No. 21003.

All attorneys/agents associated with the Customer No. 21003 have been withdrawn.

Applicant is reminded that there is no attorney of record at this time.

All future correspondence will be directed to the first named inventor Jose Rodriguez at the address list listed in the request.

Telephone inquiries concerning this decision should be directed to the undersigned at 571-272-4584.

JoAnne Burke
Petitions Examiner
Office of Petitions

cc: Jose Rodriguez
1108 Sugar Maple Drive
Greenwood, IN 46143

UNITED STATES PATENT AND TRADEMARK OFFICE

UNITED STATES DEPARTMENT OF COMMERCE
United States Patent and Trademark Office
Address: COMMISSIONER FOR PATENTS
P.O. Box 1450
Alexandria, Virginia 22313-1450
www.uspto.gov

APPLICATION NO.	FILING DATE	FIRST NAMED INVENTOR	ATTORNEY DOCKET NO.	CONFIRMATION NO.
12/116,648	05/07/2008	Yong-Seock CHOI	1235-566 (SP7063)	7463

EXAMINER
CALDWELL, ANDREW T

ART UNIT	PAPER NUMBER
2442	

MAIL DATE	DELIVERY MODE
09/04/2009	PAPER

7590 09/04/2009
THE FARRELL LAW FIRM, LLP
290 Broadhollow Road
Suite 210E
Melville, NY 11747

DECISION GRANTING PETITION UNDER 37 CFR 1.138(d)

The declaration of express abandonment is recognized

This is in response to the petition under 37 CFR 1.138(d), requesting for a refund of any previously paid search fee and excess claims fee in the above-identified application.

The petition is granted.

The express abandonment is recognized. Any previously paid search fee and excess claims fee are hereby refunded.

Telephone inquiries should be directed to the Office of Data Management at (571) 272-4200.

Patent Publication Branch
Office of Data Management

FORM PET651G (Rev. 08/07)

Refund Ref:
09/08/2009 0030074083

Credit Card Refund Total: $1030.00

Am Exp..: XXXXXXXXXXX1011

UNITED STATES PATENT AND TRADEMARK OFFICE

UNITED STATES DEPARTMENT OF COMMERCE
United States Patent and Trademark Office
Address: COMMISSIONER FOR PATENTS
P.O. Box 1450
Alexandria, Virginia 22313-1450
www.uspto.gov

APPLICATION NO.	FILING DATE	FIRST NAMED INVENTOR	ATTORNEY DOCKET NO.	CONFIRMATION NO.
12/116,670	05/07/2008	Nixon Cheaz	RSW920070417US1 (21938)	7515

78939 7590 07/22/2008
SCULLY, SCOTT, MURPHY & PRESSER, P.C.
400 GARDEN CITY PLAZA, SUITE 300
GARDEN CITY, NY 11530

EXAMINER
AN, MENG AI T

ART UNIT	PAPER NUMBER
2195	

MAIL DATE	DELIVERY MODE
07/22/2008	PAPER

Please find below and/or attached an Office communication concerning this application or proceeding.

The time period for reply, if any, is set in the attached communication.

UNITED STATES PATENT AND TRADEMARK OFFICE

Commissioner for Patents
United States Patent and Trademark Office
P.O. Box 1450
Alexandria, VA 22313-1450
www.uspto.gov

SCULLY, SCOTT, MURPHY & PRESSER, P.C.
400 GARDEN CITY PLAZA, SUITE 300
GARDEN CITY NY 11530

In re Application of: Nixon Cheaz Serial No.: 12/116,670 Filed: May 07, 2008 Docket: RSW920070417US1 Title: METHOD TO SEGREGATE SUSPICIOUS THREADS IN A HOSTED ENVIRONMENT TO PREVENT CPU RESOURCE EXHAUSTION FROM HUNG THREADS	DECISION ON PETITION TO MAKE SPECIAL FOR NEW APPLICATION UNDER 37 C.F.R. § 1.102 & M.P.E.P. § 708.02

This is a decision on the petition filed on May 07, 2008 to make the above-identified application special for accelerated examination procedure under 37 C.F.R. § 1.102(d).

The petition to make the application special is **DISMISSED**.

REGULATION AND PRACTICE

A grantable petition to make special under 37 C.F.R. § 1.102(d) and pursuant to the "Change to Practice for Petitions in Patent Applications to Make Special and for Accelerated Examination" published in the Federal Register on June 26, 2006 (71 Fed. Reg. 36323), must satisfy the following conditions:

I. Conditions Regarding the Application:

1. the application must be a non-reissue utility or design application filed under 37 CFR 1.111(a);
2. the application, the petition and the required fees must be filed electronically using the USPTO's electronic filing system (EFS), or EFS-web; if not filed electronically, a statement asserting that EFS and EFS-web were not available during the normal business hours.
3. at the time of filing, the application must be complete under 37 CFR 1.51 and in condition for examination;
4. the application must contain three or fewer independent claims and twenty or fewer total claims and the claims must be directed to a single invention.

II. Conditions Regarding the Petition:

The petition must:

1. be filed with the application;

2. include a statement that applicant agrees not to separately argue the patentability of any independent claim during any appeal in the application;

3. include a statement that applicant agrees to make an election without traverse in a telephone interview.

4. include a statement that applicant agrees to conduct such an interview when requested by the examiner.

5. include a statement, made based on a good faith belief, that a preexamination search in compliance with the following requirements, was conducted, including an identification of the filed of search by United States class and subclass, where applicable, and for database searches, the search logic or chemical structure or sequence used as a query, the name of the file(s) searched and the database service, and the date of the search.

The preexamination search must:

5.1 involve U.S. patents and patent application publications, foreign patent documents, and non-patent literature, unless the applicant can justify with reasonable certainty that no references more pertinent than those already identified are likely to be found in the eliminated sources and includes such a justification with this statement;

5.2. be directed to the claimed invention and encompass all of the features of the claims, giving the claims the broadest reasonable interpretation;

5.3. encompass the disclosed features that may be claimed.

6. must provide in support of the petition an accelerated examination support document. An accelerated examination support document must include:

6.1. an information disclosure statement (IDS) in compliance with 37 CFR 1.98 citing each reference deemed most closely related to the subject matter of each of the claims;

6.2. an identification of all the limitations in the claims that are disclosed by the reference specifying where the limitation is disclosed in the cited reference;

6.3. a detailed explanation of how each of the claims is patentable over the references cited with particularity required by 37 CFR 1.111(b) and (c);

6.4. a concise statement of the utility of the invention as defined in each of the independent claims (unless the application is a design application);

6.5. a showing of where each limitation of the claims finds support under 35 USC 112, first paragraph, in the written description of the specification. If applicable, the showing must also identify: (1) each means- (or step) plus-function claim element that invokes consideration under 35 USC 112, sixth paragraph; and (2) the structure, material, or acts in the specification that corresponds to each means- (or step) plus-function claim element that invokes consideration under 35 USC 112, sixth paragraph; if the application claims the benefit of one or more applications under title 35, United States Code, the showing must also include where each limitation of the claims finds support under 35 USC 112, first paragraph, in each such application in which such supports exists;

6.6. an identification of any cited references that may be disqualified under 35 USC 103(c).

REVIEW OF FACTS

The conditions I.1 to II.4 above are considered to have been met. However, the petition fails to comply with conditions II.5 and II.6 above. Therefore, the petition fails to meet the required conditions to be accorded special status under the accelerated examination procedure.

Regarding item II.5.1 above, for classification searches, MPEP 719.05 states that a *classification search* is defined as a complete search of all the documents in a particular subclass, and it is not limited by any text query or other means. Petitioner is requested to **clarify whether** the **identified classes and subclasses** listed as being searched in the "US Field of Search" were **searched in their entirety**.

Database search: Patbase.com

This search includes US-PGPUB, USPAT, as well as foreign patent databases such as EPO, JPO, and WIPO (PCT). Applicants have limited the text search logic by reference to classes in the US classification system. Since the foreign patent databases are not indexed by US classification system, it is believed that this search would not return any documents from the JPO, EPO, and WIPO databases, and hence the search is found to be defective.

Database search: Delphion

This search includes US patents, US applications, European patents, European applications, WIPO PCT applications, Abstracts of Japan, and IBM TDB. Applicants have limited the text search logic for many of the search strings by reference to classes in the US classification system. Since the foreign patent databases and IBM TDB are not indexed by US classification system, it is believed that this search would not return any documents from those databases for such searches.

Applicants is required to search the foreign and non-patent literature database, without limiting the searches by US class(es)/subclass(es). It is assumed that after the supplemental search is completed new references will be found that better read on the claimed invention and will be properly analyzed in the Support Document include with any renewed petition. **Any reference which teaches any portion of the limitation must be so identified even if the reference does not teach the entirety of the limitation.**

In addition, petitioner should **review the Identification of Limitations disclosed by References and the Detailed Explanation of Patentability** sections **in view of updated search, and changes and clarifications, and provide updates/clarifications, as necessary, to ensure compliance with the requirement of items 6.2 and 6.3 above.**

Regarding the requirement of MPEP § 708.02(a)(I.)(I) and item II 6.3; the Accelerated Examination Support Document (AESD) does not provide a detailed explanation of how each of the claims are patentable with the particularity required by 37 CFR 1.111(b) and (c). In section 9(C) of the AESD, petitioner asserts that "all of the references" whether considered singularly or in reasonable combination, fail to teach or suggest the identified limitations; thus concluded that the claims are patentably distinguished over the references alone or in combination.

By identifying all limitations as those limitations that the reference(s) do not show or suggest, the petition fails to discuss the claimed limitations with respect to the references in accordance with the requirements of 37 CFR 1.111 (b) and (c). That is, the petition does not specifically properly compare/contrast the claimed invention with respect to the relevant teachings in the prior art in the identified references. A general allegation that "all of the references fail to at least teach ... and therefore patentably distinguish over each of the references alone or in combination" does not comply with the requirements. Petitioner fails clearly point out the patentable novelty which he or she thinks the claims present in view of the state of the art disclosed by the references cited. The Office cannot infer or guess what petitioner believes the differences between the claims and the teachings of the prior art to be. For these reasons, the petition does not meet the requirement of MPEP § 708.02(a)(I.)(I)(3).

Petitioner is requested to clearly point out claim limitations not taught by any of the references and how the limitations are patentably distinguished over the references cited alone or in combination.

DECISION

For the above-stated reasons, the petition is **dismissed**. The application will therefore be taken up by the examiner for action in its regular turn.

Petitioner is given a single opportunity to perfect the petition. Any request for reconsideration of this decision must be submitted within 1 (one) month or 30 (thirty) days, whichever is longer, (no extension of time under 37 CFR 1.136(a)) from the date of this decision in order to be considered timely. Any request for reconsideration must address the deficiencies indicated above.

Petitioner is reminded that, upon granting of the special status of the application on request for reconsideration, the application will be processed expeditiously. However, due to the dismissal of the instant petition, examination may not be completed within twelve months of the filing date of the application.

Any inquiry regarding this decision should be directed to Mano Padmanabhan, at (571) 272-4210. If attempts to reach the undersigned by telephone are unsuccessful, Kakali Chaki, Quality Assurance Specialist, can be reached at (571) 272-3719.

Mano Padmanabhan
Quality Assurance Specialist
Technology Center 2100
Computer Architecture, Software and Information Security

UNITED STATES PATENT AND TRADEMARK OFFICE

UNITED STATES DEPARTMENT OF COMMERCE
United States Patent and Trademark Office
Address: COMMISSIONER FOR PATENTS
P.O. Box 1450
Alexandria, Virginia 22313-1450
www.uspto.gov

APPLICATION NO.	FILING DATE	FIRST NAMED INVENTOR	ATTORNEY DOCKET NO.	CONFIRMATION NO.
12/116,670	05/07/2008	Nixon Cheaz	RSW920070417US1 (21938)	7515

78939 7590 09/30/2008
SCULLY, SCOTT, MURPHY & PRESSER, P.C.
400 GARDEN CITY PLAZA, SUITE 300
GARDEN CITY, NY 11530

EXAMINER
AN, MENG AI T

ART UNIT	PAPER NUMBER
2195	

MAIL DATE	DELIVERY MODE
09/30/2008	PAPER

Please find below and/or attached an Office communication concerning this application or proceeding.

The time period for reply, if any, is set in the attached communication.

UNITED STATES PATENT AND TRADEMARK OFFICE

Commissioner for Patents
United States Patent and Trademark Office
P.O. Box 1450
Alexandria, VA 22313-1450
www.uspto.gov

SCULLY, SCOTT, MURPHY & PRESSER, P.C.
400 GARDEN CITY PLAZA, SUITE 300
GARDEN CITY NY 11530

In re Application of: Nixon Cheaz Serial No.: 12/116,670 Filed: May 07, 2008 Docket: RSW920070417US1 Title: METHOD TO SEGREGATE SUSPICIOUS THREADS IN A HOSTED ENVIRONMENT TO PREVENT CPU RESOURCE EXHAUSTION FROM HUNG THREADS	DECISION ON PETITION TO MAKE SPECIAL FOR NEW APPLICATION UNDER 37 C.F.R. § 1.102 & M.P.E.P. § 708.02

This is a decision on the renewed petition filed on August 22, 2008, to make the above-identified application special for accelerated examination procedure under 37 C.F.R. § 1.102(d). The original petition, submitted on May 7, 2008, was dismissed in the decision mailed on July 22, 2008.

The petition to make the application special is **GRANTED**.

The application is eligible for accelerated examination and the petition complies with the conditions for granting the application special status pursuant to the "Change to Practice for Petitions in Patent Applications to Make Special and for Accelerated Examination" published June 26, 2006, in the Federal Register. (71 Fed. Reg. 36323).

The prosecution of the instant application will be conducted expeditiously according to the following guidelines.

1. The application will be docketed to an examiner and taken up for action within two weeks of the date of this decision.

2. Restriction Practice:
   If the examiner determines that the claims are not directed to a single invention, a telephone request to elect one single invention will be made pursuant to MPEP 812.01. As a prerequisite to the grant of this petition, the applicant has agreed to make an oral election, by telephone, without traverse. If the applicant refuses to make an election without traverse, or the examiner cannot reach the applicant after a reasonable effort, the

examiner will treat the first claimed invention (invention defined by claim 1) as having being constructively elected without traverse for examination.

3. Office action:
If it is determined that, after appropriate consultation, there is a potential rejection or any other issue to be addressed, the examiner will telephone the applicant and arrange an interview to discuss and resolve the issue. An Office action, other than a Notice of Allowance and Fee(s) Due (Notice of Allowance), will not be issued unless either: 1) an interview was conducted but did not result in agreed to action that places the application in condition for allowance, or, 2) a determination is made that an interview would be unlikely to result in the application being placed in condition for allowance, and 3) an internal conference has been held to review any rejection of any claim.

4. Time for Reply:
An Office action other than a Notice of Allowance or a final Office action will set a shortened statutory period of one month or thirty days, whichever is longer, for reply with no extension of time available under 37 CFR 1.136(a). Failure to timely file a reply within this non-extendible period for reply will result in the abandonment of the application.

5. Reply by Applicant:
A timely reply to an Office action other than the Notice of Allowance must be submitted electronically via EFS or EFS-web and limited to addressing the rejections, objections and requirement made. Any amendment that attempts to: 1) add claims which would result in more than three pending independent claims or more than twenty pending total claims; 2) present claims not encompassed by the pre-examination search or an updated accelerated examination support document; or 3) present claims that are directed a non-elected invention or an invention other than that previously claimed and examined in the application, will be treated as not fully responsive and will not be entered.

   For any amendment to the claims (including any new claim) that is not encompassed by the accelerated examination support document, applicant must provide an updated accelerated examination support document that encompasses the amended or new claims at the time of filing of the amendment.

   To proceed expeditiously with the examination, it is recommended that a reply with amendments made to any claim or with any new claim being added be accompanied by an updated accelerated examination support document or a statement explaining how the amended or new claim is supported by the original accelerated examination support document.

6. Information Disclosure Statement (IDS):
Any IDS filed during prosecution must be submitted electronically via EFS or EFS-web, accompanied by an updated accelerated examination support document, and be in compliance with 37 CFR 1.97 and 1.98.

7. Post-Allowance Processing:
   To expedite processing of the allowed application into a patent, the applicant must: 1) pay the required fees within one month of the date of the Notice of Allowance, and 2) not file any post allowance papers not required by the Office. In no event may the issue fee be paid and accepted later than three months from the date of the Notice of Allowance.

8. After-Final and Appeal Procedures:
   To expedite prosecution, after receiving the final Office action, applicant must: 1) promptly file a notice of appeal, an appeal brief and appeal fees; and 2) not request a pre-appeal brief conference.

   Any amendment, affidavit or other evidence filed after final Office action must comply with applicable rules and the requirements outlined in numbered paragraphs 5 and 6 above.

   On appeal, the application will proceed according to normal appeal procedures. After appeal, the application will again be treated special.

9. Proceedings Outside the Normal Examination Process:
   If the application becomes involved in a proceeding that is outside the normal examination process (e.g., a secrecy order, national security review, interference proceeding, petitions under 37 CFR 1.181, 182 or 183), the application will be treated special before and after such proceeding.

10. Final Disposition:
    The twelve-month goal of this accelerated examination procedure ends with a final disposition. The mailing of a final Office action, a Notice of Allowance, the filing of a Notice of Appeal, or the filing of a Request for Continued Examination (RCE) is the final disposition.

If, during prosecution, a paper is not filed electronically using EFS-web, a reply is filed but is not fully responsive, the application is involved in an appeal, or a proceeding outside normal examination process, the application will still be examined expeditiously, however, the final disposition may occur more than twelve months from the filing of the application. In addition, Applicant is reminded that due to the dismissal of the previous petition submission, examination may not be completed within twelve months of the filing date of the application.

Any inquiry regarding this decision should be directed to Mano Padmanabhan at (571) 272-4210. If attempts to reach the undersigned by telephone are unsuccessful, Kakali Chaki, Quality Assurance Specialist, can be reached at (571) 272-3719.

/Mano Padmanabhan/

Mano Padmanabhan
WQAS Technology Center 2100
Computer Architecture, Software, and Information Security

UNITED STATES PATENT AND TRADEMARK OFFICE

Commissioner for Patents
United States Patent and Trademark Office
P.O. Box 1450
Alexandria, VA 22313-1450
www.uspto.gov

Shay Glenn, LLP
2755 Campus Drive
Suite 210
San Mateo, CA 94403

COPY MAILED

MAR 13 2009

OFFICE OF PETITIONS

In re Application of	:	
Randell L. Werneth et al.	:	
Application No. 12/116,753	:	DECISION ON PETITION
Filed: May 7, 2008	:	TO WITHDRAW
Attorney Docket No. 10228-707.201 / AFI-025	:	FROM RECORD
	:	

This is a decision on the Request to Withdraw as attorney or agent of record under 37 C.F.R. § 1.36(b), filed February 17, 2009.

The request is **APPROVED**.

A grantable request to withdraw as attorney/agent of record must be signed by every attorney/agent seeking to withdraw or contain a clear indication that one attorney is signing on behalf of another/others. A request to withdraw will not be approved unless at least 30 (thirty) days would remain between the date of approval and the later of the expiration date of a time to file a response or the expiration date of the maximum time period which can be extended under 37 C.F.R. § 1.136(a).

The request was signed by James R. Shay on behalf of all attorneys/agents associated with customer number 66854. All attorneys/agents associated with customer number 66854 have been withdrawn.

Applicant is reminded that there is no attorney of record at this time.

The request to change the correspondence of record is not acceptable as the requested correspondence address is not that of (1) the first named signing inventor; or (2) an intervening assignee of the entire interest under 37 C.F.R. 3.71. Accordingly, all correspondence will be mailed to address of the assignee at the first copied address below. A courtesy copy of this decision will be mailed to the address noted on the request. If this person(s) desire to receive future correspondence regarding this application, the proper power of attorney documents must be submitted.

Telephone inquiries concerning this decision should be directed to Kimberly Inabinet at 571-272-4618.

Kimberly Inabinet
Petitions Examiner
Office of Petitions

cc: Ablation Frontiers, Inc.
6354 Corte Del Abeto
Carlsbad, CA 92011

cc: Medtronic, Inc.
710 Medtronic Parkway NE
Minneapolis, MN 55432-9924

UNITED STATES PATENT AND TRADEMARK OFFICE

UNITED STATES DEPARTMENT OF COMMERCE
United States Patent and Trademark Office
Address: COMMISSIONER FOR PATENTS
P.O. Box 1450
Alexandria, Virginia 22313-1450
www.uspto.gov

APPLICATION NUMBER	FILING OR 371(C) DATE	FIRST NAMED APPLICANT	ATTY. DOCKET NO./TITLE
12/116,753	05/07/2008	Randell L. Werneth	10228-707.201 / AFI-025

CONFIRMATION NO. 7658

POWER OF ATTORNEY NOTICE

66854
SHAY GLENN LLP
2755 CAMPUS DRIVE
SUITE 210
SAN MATEO, CA 94403

OC000000034987436

Date Mailed: 03/13/2009

NOTICE REGARDING CHANGE OF POWER OF ATTORNEY

This is in response to the Power of Attorney filed 02/17/2009.

- The withdrawal as attorney in this application has been accepted. Future correspondence will be mailed to the new address of record. 37 CFR 1.33.

/kainabinet/

Office of Data Management, Application Assistance Unit (571) 272-4000, or (571) 272-4200, or 1-888-786-0101

UNITED STATES PATENT AND TRADEMARK OFFICE

Commissioner for Patents
United States Patent and Trademark Office
P.O. Box 1450
Alexandria, VA 22313-1450
www.uspto.gov

COPY MAILED
JUL 0 2 2008
OFFICE OF PETITIONS

ABRAHAM SUHAMI
465 WILLOW GLEN WAY STE. 325
SAN JOSE CA 95125

In re Application of	:	
Avraham Suhami	:	
Application No. 12/116,774	:	DECISION ON PETITION
Filed: May 7, 2008	:	
For: A DIRECTIONAL NEUTRON	:	
DETECTOR	:	

This is a decision on the request filed May 11, 2008, which is being treated as a petition under 37 CFR 1.181 (no fee), requesting refund of the filing fee for the duplicate application filed by mail.

The petition is **DISMISSED**.

Petitioner asserts that an unintended duplicate application was filed.

37 CFR 1.26(a) states, in part: "The Director may refund any fee paid by mistake or in excess of that required. A change of purpose after the payment of a fee, such as when a party desires to withdraw a patent filing for which the fee was paid, including an application, an appeal, or a request for an oral hearing, will not entitle a party to a refund of such fee."

However, the Office may find a mistake pursuant to 37 CFR 1.26, waive the presumption in 37 CFR 1.26 that applications are not entitled to filing fee refunds, and refund the filing fees associated with unintended duplicate application filings via EFS-Web when the following conditions have been met:

(1) Applicant must certify that they had filed the duplicate application(s) prior to receiving appropriate confirmation from the Office that the initial application filing via EFS-Web was received by the Office;

(2) the request for a refund must be filed within three months from the filing date of the first application receiving an appropriate acknowledgement;

(3) the request must include a statement which attests on a personal knowledge basis or to the satisfaction of the Director that the duplicate application was intended to be the original application;

(4) the duplicate application must have been filed via EFS-Web on or after March 16, 2006;

(5) the request must list the other application(s) of which the instant application is deemed to be a "duplicate"; and

(6) the request should include a statement of express abandonment of the instant application as it was filed in error.

When the above conditions have been met, the Office will generally accept the statement as an assertion that the duplicate application was filed by mistake without requiring further information.

The instant petition lacks items (1), (4), (5), and (6) above.

Accordingly, the petition for refund of a duplicate filing fee under 37 CFR 1.181 cannot be granted at this time. Additionally, the second application was filed by mail and not by EFS-Web as stated in the instant petition.

As an alternative, petitioner may wish to file a declaration of express abandonment of the instant application pursuant to 37 CFR 1.138(d) to obtain a refund of the search and excess claims fees. A copy of form PTO/SB/24B is provided for petitioner's convenience. Petitioner is advised to file the declaration without delay as the express abandonment can only be processed before an examination has been made of the application. Thereafter, petitioner cannot obtain a refund of such fees except as provided in 37 CFR 1.26.

Further correspondence with respect to this matter should be addressed as follows:

By Mail: Mail Stop PETITION
Commissioner for Patents
P. O. Box 1450
Alexandria, VA 22313-1450

By facsimile: **(571) 273-8300**
Attn: Office of Petitions

By hand: U. S. Patent and Trademark Office
Customer Service Window, Mail Stop Petitions
Randolph Building
401 Dulany Street
Alexandria, VA 22314

Telephone inquiries concerning this decision should be directed to the undersigned at (571) 272-3208.

Karen Creasy

Karen Creasy
Petitions Examiner
Office of Petitions

enclosure: PTO/SB/24B

PTO/SB/24B (09-06)
Approved for use through 03/31/2007. OMB 0651-0031
U.S. Patent and Trademark Office; U.S. DEPARTMENT OF COMMERCE
Under the Paperwork Reduction Act of 1995, no persons are required to respond to a collection of information unless it displays a valid OMB control number.

PETITION FOR EXPRESS ABANDONMENT TO OBTAIN A REFUND

Fax the petition directly to the Pre-Grant Publication Division at (703) 305-8568
Or **Mail** the petition to:
Mail Stop Express Abandonment
Commissioner for Patents
P.O. Box 1450, Alexandria, VA 22313-1450

Application Number	
Filing Date	
First Named Inventor	
Art Unit	
Examiner Name	
Attorney Docket Number	

Petition for Express Abandonment Under 37 CFR 1.138(d) to Obtain a Refund

I hereby petition to expressly abandon the above-identified application to obtain a refund of any previously paid search fee and excess claims fee in the application. Please refund any search fee and excess claims fee paid in this application.

☐ The Director is hereby authorized to credit the fee(s) to Deposit Account No. _____.

NOTE: The provisions of 37 CFR 1.138(d) only apply to applications filed under 35 U.S.C. 111(a) on or after December 8, 2004. A paper requesting express abandonment of an application is not effective unless and until an appropriate USPTO official recognizes and acts on the paper. See the Manual of Patent Examining Procedure (MPEP), section 711.01.

TO AVOID PUBLICATION, INCLUDE FORM PTO/SB/24A AND PETITION FEE WITH THIS FORM.

I am the:

☐ applicant.

☐ assignee of record of the entire interest. See 37 CFR 3.71.
Statement under 37 CFR 3.73(b) is enclosed. (Form PTO/SB/96)

☐ attorney or agent of record. Attorney or agent registration number is _____.

☐ attorney or agent acting under 37 CFR 1.34, who is authorized under 37 CFR 1.138(b) because the application is expressly abandoned in favor of a continuing application. Attorney or agent registration number is _____.

Signature	Date
Typed or printed name	Telephone Number

Note: Signatures of all the inventors or assignees of record of the entire interest or their representative(s) are required. Submit multiple forms if more than one signature is required, see below.

☐ Total of _____ forms are submitted.

This collection of information is required by 37 CFR 1.138(c). The information is required to obtain or retain a benefit by the public which is to file (and by the USPTO to process) an application. Confidentiality is governed by 35 U.S.C. 122 and 37 CFR 1.11 and 1.14. This collection is estimated to take 12 minutes to complete, including gathering, preparing, and submitting the completed application form to the USPTO. Time will vary depending upon the individual case. Any comments on the amount of time you require to complete this form and/or suggestions for reducing this burden, should be sent to the Chief Information Officer, U.S. Patent and Trademark Office, U.S. Department of Commerce, P.O. Box 1450, Alexandria, VA 22313-1450. DO NOT SEND FEES OR COMPLETED FORMS TO THIS ADDRESS. **SEND TO: Mail Stop Express Abandonment, Commissioner for Patents, P.O. Box 1450, Alexandria, VA 22313-1450.**

If you need assistance in completing the form, call 1-800-PTO 9199 and select option 2.

PTO/SB/130 (07-09)
Approved for use through 07/31/2012. OMB 0651- 0031
U.S. Patent and Trademark Office; U.S. DEPARTMENT OF COMMERCE
Under the Paperwork Reduction Act of 1995, no persons are required to respond to a collection of information unless it contains a valid OMB control number

PETITION TO MAKE SPECIAL BASED ON AGE FOR ADVANCEMENT OF EXAMINATION UNDER 37 CFR 1.102(c)(1)

Application Information

Application Number	12/116,774	Confirmation Number	7707	Filing Date	2008-05-07
Attorney Docket Number (optional)		Art Unit	2884	Examiner	LEE,SHUN K
First Named Inventor	Avraham Suhami				
Title of Invention	Directional Neutron Detector				

Attention: Office of Petitions

An application may be made special for advancement of examination upon filing of a petition showing that the applicant is 65 years of age, or more. No fee is required with such a petition. See 37 CFR 1.102(c)(1) and MPEP 708.02 (IV).

APPLICANT HEREBY PETITIONS TO MAKE SPECIAL FOR ADVANCEMENT OF EXAMINATION IN THIS APPLICATION UNDER 37 CFR 1.102(c)(1) and MPEP 708.02 (IV) ON THE BASIS OF THE APPLICANT'S AGE.

A grantable petition requires one of the following items:
(1) Statement by one named inventor in the application that he/she is 65 years of age, or more; or
(2) Certification by a registered attorney/agent having evidence such as a birth certificate, passport, driver's license, etc. showing one named inventor in the application is 65 years of age, or more.

Name of Inventor who is 65 years of age, or older

Given Name	Middle Name	Family Name	Suffix
Avraham		Suhami	

A signature of the applicant or representative is required in accordance with 37 CFR 1.33 and 10.18.
Please see 37 CFR 1.4(d) for the format of the signature.

Select (1) or (2) :

- (●) (1) I am an inventor in this application and I am 65 years of age, or more.
- ( ) (2) I am an attorney or agent registered to practice before the Patent and Trademark Office, and I certify that I am in possession of evidence, and will retain such in the application file record, showing that the inventor listed above is 65 years of age, or more.

Signature	/Avraham Suhami/	Date (YYYY-MM-DD)	2010-06-26
Name	Avraham Suhami		

PTO/SB/130 (07-09)
Approved for use through 07/31/2012. OMB 0651- 0031
U.S. Patent and Trademark Office; U.S. DEPARTMENT OF COMMERCE
Under the Paperwork Reduction Act of 1995, no persons are required to respond to a collection of information unless it contains a valid OMB control number

Privacy Act Statement

The Privacy Act of 1974 (P.L. 93-579) requires that you be given certain information in connection with your submission of the attached form related to a patent application or patent. Accordingly, pursuant to the requirements of the Act, please be advised that: (1) the general authority for the collection of this information is 35 U.S.C. 2(b)(2); (2) furnishing of the information solicited is voluntary; and (3) the principal purpose for which the information is used by the U.S. Patent and Trademark Office is to process and/or examine your submission related to a patent application or patent. If you do not furnish the requested information, the U.S. Patent and Trademark Office may not be able to process and/or examine your submission, which may result in termination of proceedings or abandonment of the application or expiration of the patent.

The information provided by you in this form will be subject to the following routine uses:

1. The information on this form will be treated confidentially to the extent allowed under the Freedom of Information Act (5 U.S.C. 552) and the Privacy Act (5 U.S.C. 552a). Records from this system of records may be disclosed to the Department of Justice to determine whether the Fr eedom of Information Act requires disclosure of these records.

2. A record from this system of records may be disclosed, as a routine use, in the course of presenting evidence to a court, magistrate, or administrative tribunal, including disclosures to opposing counsel in the course of settlement negotiations.

3. A record in this system of records may be disclosed, as a routine use, to a Member of Congress submitting a request involving an individual, to whom the record pertains, when the individual has requested assistance from the Member with respect to the subject matter of the record.

4. A record in this system of records may be disclosed, as a routine use, to a contractor of the Agency having need for the information in order to perform a contract. Recipients of information shall be required to comply with the requirements of the Privacy Act of 1974, as amended, pursuant to 5 U.S.C. 552a(m).

5. A record related to an International Application filed under the Patent Cooperation Treaty in this system of records may be disclosed, as a routine use, to the International Bureau of the World Intellectual Property Organization, pursuant to the Patent Cooperation Treaty.

6. A record in this system of records may be disclosed, as a routine use, to another federal agency for purposes of National Security review (35 U.S.C. 181) and for review pursuant to the Atomic Energy Act (42 U.S.C. 218(c)).

7. A record from this system of records may be disclosed, as a routine use, to the Administrator, General Services, or his/her designee, during an inspection of records conducted by GSA as part of that agency's responsibility to recommend improvements in records management practices and programs, under authority of 44 U.S.C. 2904 and 2906. Such disclosure shall be made in accordance with the GSA regulations governing inspection of records for this purpose, and any other relevant (i.e., GSA or Commerce) directive. Such disclosure shall not be used to make determinations about indivi duals.

8. A record from this system of records may be disclosed, as a routine use, to the public after either publication of the application pursuant to 35 U.S.C. 122(b) or issuance of a patent pursuant to 35 U.S.C. 151. Further, a record may be disclosed, subject to the limitations of 37 CFR 1.14, as a routine use, to the public if the record was filed in an application which became abandoned or in which the proceedings were terminated and which application is referenced by either a published application, an application open to public inspections or an issued patent.

9. A record from this system of records may be disclosed, as a routine use, to a Federal, State, or local law enforcement agency, if the USPTO becomes aware of a violation or potential violation of law or regulation.

UNITED STATES PATENT AND TRADEMARK OFFICE

Commissioner for Patents
United States Patent and Trademark Office
P.O. Box 1450
Alexandria, VA 22313-1450
www.uspto.gov

In re Application of
Avraham Suhami

Application No. 12116774

Filed: May 7,2008

Attorney Docket No.

:DECISION ON PETITION TO MAKE SPECIAL
:UNDER 37 CFR 1.102(c)(1)

This is a decision on the electronic petition under 37 CFR 1.102 (c)(1), filed 26-JUN-2010 to make the above-identified application special based on applicant's age as set forth in MPEP § 708.02, Section IV.

The petition is **GRANTED**.

A grantable petition to make an application special under 37 CFR 1.102(c)(1), MPEP § 708.02, Section IV: Applicant's Age must include a statement by applicant or a registered practitioner having evidence that applicant is at least 65 years of age. No fee is required.

Accordingly, the above-identified application has been accorded "special" status and will be taken up for action by the examiner upon the completion of all pre-examination processing.

Telephone inquiries concerning this electronic decision should be directed to the Electronic Business Center at 866-217-9197.

All other inquiries concerning either the examination or status of the application should be directed to the Technology Center.

UNITED STATES PATENT AND TRADEMARK OFFICE

UNITED STATES DEPARTMENT OF COMMERCE
United States Patent and Trademark Office
Address: COMMISSIONER FOR PATENTS
P.O. Box 1450
Alexandria, Virginia 22313-1450
www.uspto.gov

APPLICATION NO.	FILING DATE	FIRST NAMED INVENTOR	ATTORNEY DOCKET NO.	CONFIRMATION NO.
12/116,801	05/07/2008	Nils Haustein	DE92008007US1	7764

42640 7590 08/18/2008
DILLON & YUDELL LLP
8911 NORTH CAPITAL OF TEXAS HWY
SUITE 2110
AUSTIN, TX 78759

EXAMINER

ART UNIT	PAPER NUMBER
2131	

MAIL DATE	DELIVERY MODE
08/18/2008	PAPER

Please find below and/or attached an Office communication concerning this application or proceeding.

The time period for reply, if any, is set in the attached communication.

UNITED STATES PATENT AND TRADEMARK OFFICE

Commissioner for Patents
United States Patent and Trademark Office
P.O. Box 1450
Alexandria, VA 22313-1450
www.uspto.gov

DILLON & YUDELL LLP
8911 NORTH CAPITAL OF TEXAS HWY
SUITE 2110
AUSTIN TX 78759

In re Application of: Haustein, Nils et al. Serial No.: 12/116801 Filed: May 7, 2008 Docket: DE92008007US1 Title: METHOD OF AND SYSTEM FOR CONTROLLING ACCESS TO AN AUTOMATED MEDIA LIBRARY	DECISION ON PETITION TO MAKE SPECIAL FOR NEW APPLICATION UNDER 37 C.F.R. § 1.102 & M.P.E.P. § 708.02

This is a decision on the petition filed on May 7, 2008 to make the above-identified application special for accelerated examination procedure under 37 C.F.R. § 1.102(d).

The petition to make the application special is **DENIED**.

REGULATION AND PRACTICE

To be eligible for accelerated examination under 37 C.F.R. § 1.102(d) and pursuant to the "Change to Practice for Petitions in Patent Applications to Make Special and for Accelerated Examination" published in the Federal Register on June 26, 2006 (71 Fed. Reg. 36323), the following conditions must be satisfied:

1. The application must be a non-reissue utility or design application filed under 37 CFR 1.111(a);
2. The application, the petition and the required fees must be filed electronically using the USPTO's electronic filing system (EFS), or EFS-web; if not filed electronically, a statement asserting that EFS and EFS-web were not available during the normal business hours;
3. The application, at the time of filing, must be complete under 37 CFR 1.51 and in condition for examination;
4. The application must contain three or fewer independent claims and twenty or fewer total claims and the claims must be directed to a single invention;
5. The petition must be filed with the application.

The application as filed is not eligible for the accelerated examination under 37 C.F.R. § 1.102(d) because it is a utility application filed under 37 CFR 1.111(a) and was not complete under 37 CFR 1.51 and in condition for examination at the time of filing. The mailing of the

Notice to File Corrected Application Papers on May 13, 2008 is evidence that the application was not complete and in condition for examination at the time of filing.

For the above-stated reasons, the petition is denied. The application will therefore be taken up by the examiner for action in its regular turn.

Any inquiry regarding this decision should be directed to the undersigned at (571) 272-3719. If attempts to reach the undersigned are unsuccessful, Mano Padmanabhan., Quality Assurance Specialist can be reached at (571)272-4210.

/Kakali Chaki/

Kakali Chaki, Quality Assurance Specialist
Technology Center 2100

UNITED STATES PATENT AND TRADEMARK OFFICE

UNITED STATES DEPARTMENT OF COMMERCE
United States Patent and Trademark Office
Address: COMMISSIONER FOR PATENTS
P.O. Box 1450
Alexandria, Virginia 22313-1450
www.uspto.gov

APPLICATION NO.	FILING DATE	FIRST NAMED INVENTOR	ATTORNEY DOCKET NO.	CONFIRMATION NO.
12/116,869		Cynthia M. GOH	2007428-0008 (NNT-001AE)	7905

24280 7590 06/12/2008
CHOATE, HALL & STEWART LLP
TWO INTERNATIONAL PLACE
BOSTON, MA 02110

EXAMINER

ART UNIT	PAPER NUMBER
1793	

NOTIFICATION DATE	DELIVERY MODE
06/12/2008	ELECTRONIC

Please find below and/or attached an Office communication concerning this application or proceeding.

The time period for reply, if any, is set in the attached communication.

Notice of the Office communication was sent electronically on above-indicated "Notification Date" to the following e-mail address(es):

patentdocket@choate.com

UNITED STATES PATENT AND TRADEMARK OFFICE

Commissioner for Patents
United States Patent and Trademark Office
P.O. Box 1450
Alexandria, VA 22313-1450
www.uspto.gov

CST

6-12-08

In re application of Cynthia M. Goh et al Serial No. 12/116,869 Filed: May 7, 2008 For: COMPOSITE NANOPARTICLES, NANOPARTICLES, AND METHODS FOR PRODUCING SAME	:	DECISION ON PETITION TO MAKE SPECIAL

This is a decision on the petition filed on May 7, 2008 to make the above-identified application special under the accelerated examination program.

The petition to make the application special is **DENIED.**

REGULATION AND PRACTICE

To be eligible for accelerated examination under 37 C.F.R. § 1.102(d) and pursuant to the "Changes to Practice for Petitions in Patent Applications to Make Special and for Accelerated Examination" published in the Federal Register on June 26, 2006 (71 Fed. Reg. 36323), the following conditions must be satisfied:

1. The application must be a non-reissue utility or design application filed under 37 CFR 1.111(a);
2. The application, the petition and the required fees must be filed electronically using the USPTO's electronic filing system (EFS), or EFS-web; if not filed electronically, a statement asserting that EFS and EFS-web were not available during the normal business hours;
3. The application, at the time of filing, must be complete under 37 CFR 1.51 and in condition for examination;
4. The application must contain three or fewer independent claims and twenty or fewer total claims and the claims must be directed to a single invention.

The application as filed is not eligible for accelerated examination under 37 C.F.R. § 1.102(d) because the application, at the time of filing, was not in condition for examination. Note, specifically, the NOTICE TO FILE CORRECTED APPLICATION

PAPERS mailed on May 14, 2008, which indicates that the application was not in condition for examination at the time of filing.

MPEP 708.02(a), section VIII further states:

> The petition to make special will be dismissed if the application omits an item or includes a paper that causes the Office of Initial Patent Examination (OIPE) to mail a notice during the formality review (e.g., a notice of incomplete application, notice to file missing parts, notice to file corrected application papers, notice of omitted items, or notice of informal application). The opportunity to perfect a petition (subsection II above) does not apply to applications that are not in condition for examination on filing.

For the above-stated reasons, the petition is denied. The application will therefore be taken up by the examiner for action in its regular turn.

Any inquiry regarding this decision should be directed to Christine Tierney, Quality Assurance Specialist, at (571) 272-1055.

/Christine Tierney/

Christine Tierney
Quality Assurance Specialist
Technology Center 1700

UNITED STATES PATENT AND TRADEMARK OFFICE

UNITED STATES DEPARTMENT OF COMMERCE
United States Patent and Trademark Office
Address: COMMISSIONER FOR PATENTS
P.O. Box 1450
Alexandria, Virginia 22313-1450
www.uspto.gov

APPLICATION NO.	FILING DATE	FIRST NAMED INVENTOR	ATTORNEY DOCKET NO.	CONFIRMATION NO.
12/116,873	05/07/2008	Darren Anderson	2007428-0015 (NNT-003AE)	7916

24280 7590 06/20/2008
CHOATE, HALL & STEWART LLP
TWO INTERNATIONAL PLACE
BOSTON, MA 02110

EXAMINER

ART UNIT	PAPER NUMBER
1794	

NOTIFICATION DATE	DELIVERY MODE
06/20/2008	ELECTRONIC

Please find below and/or attached an Office communication concerning this application or proceeding.

The time period for reply, if any, is set in the attached communication.

Notice of the Office communication was sent electronically on above-indicated "Notification Date" to the following e-mail address(es):

patentdocket@choate.com

UNITED STATES PATENT AND TRADEMARK OFFICE

Commissioner for Patents
United States Patent and Trademark Office
P.O. Box 1450
Alexandria, VA 22313-1450
www.uspto.gov

CST

6-20-08

In re application of
Darren Anderson et al
Serial No. 12/116,873
Filed: May 7, 2008
For: NANOPARTICLES CONFINED IN POLYELECTROLYTES

DECISION ON PETITION TO MAKE SPECIAL

This is a decision on the petition filed on May 7, 2008 to make the above-identified application special under the accelerated examination program.

The petition to make the application special is **DISMISSED.**

REGULATION AND PRACTICE

A grantable petition to make special under 37 C.F.R. § 1.102(d) and pursuant to the "Change to Practice for Petitions in Patent Applications to Make Special and for Accelerated Examination" published in the Federal Register on June 26, 2006 (71 Fed. Reg. 36323), must satisfy the following conditions:

I. Conditions Regarding the Application:

1. the application must be a non-reissue utility or design application filed under 37 CFR 1.111(a);
2. the application, the petition and the required fees must be filed electronically using the USPTO's electronic filing system (EFS), or EFS-web; if not filed electronically, a statement asserting that EFS and EFS-web were not available during the normal business hours;
3. at the time of filing, the application must be complete under 37 CFR 1.51 and in condition for examination;
4. the application must contain three or fewer independent claims and twenty or fewer total claims and the claims must be directed to a single invention.

II. Conditions Regarding the Petition:

The petition must:

1. be filed with the application;
2. include a statement that applicant agrees not to separately argue the patentability of any dependent claim during any appeal in the application;

3. include a statement that applicant agrees to make an election without traverse in a telephone interview;

4. include a statement that applicant agrees to conduct such an interview when requested by the examiner;

5. include a statement, made based on a good faith belief, that a preexamination search in compliance with the following requirements, was conducted, including an identification of the field of search by United States class and subclass, where applicable, and for database searches, the search logic or chemical structure or sequence used as a query, the name of the file(s) searched and the database service, and the date of the search.

The preexamination search must:

5.1 involve U.S. patents and patent application publications, foreign patent documents, and non-patent literature, unless the applicant can justify with reasonable certainty that no references more pertinent than those already identified are likely to be found in the eliminated sources and includes such a justification with this statement;

5.2. be directed to the claimed invention and encompass all of the features of the claims, giving the claims the broadest reasonable interpretation;

5.3. encompass the disclosed features that may be claimed.

6. must provide in support of the petition an accelerated examination support document.

An accelerated examination support document must include:

6.1. an information disclosure statement (IDS) in compliance with 37 CFR 1.98 citing each reference deemed most closely related to the subject matter of each of the claims;

6.2. an identification of all the limitations in the claims that are disclosed by the reference specifying where the limitation is disclosed in the cited reference;

6.3. a detailed explanation of how each of the claims are patentable over the references cited with particularity required by 37 CFR 1.111(b) and (c);

6.4. a concise statement of the utility of the invention as defined in each of the independent claims (unless the application is a design application);

6.5. a showing of where each limitation of the claims finds support under 35 USC 112, first paragraph, in the written description of the specification. If applicable, the showing must also identify: (1) each means- (or step) plus-function claim element that invokes consideration under 35 USC 112, sixth paragraph; and (2) the structure, material, or acts in the specification that corresponds to each means- (or step) plus-function claim element that invokes consideration under 35 USC 112, sixth paragraph; if the application claims the benefit of one or more applications under title 35, United States Code, the showing must also include where each limitation of the claims finds support under 35 USC 112, first paragraph, in each such application in which such supports exists;

6.6. an identification of any cited references that may be disqualified under 35 USC 103(c).

REVIEW OF FACTS

The conditions regarding the application (section I, subsections 1-4) discussed above are considered to have been met. Additionally, the conditions regarding the petition, section II, subsections 1-5, are considered to have been met. However, the petition fails to comply with condition II, subsection 6.

The statement showing support for the present claims on page 13 of the Accelerated Examination Support Document (AESD) is not sufficient. It is required that petitioner provide a showing of where each limitation of each of the claims finds support under 35 USC 112, first paragraph, in the written description of the parent application 12/030,359; PCT/US08/054,109; and provisional applications 60/892,927 and 60/889,609 as applicant has claimed priority to each of these applications.

Additionally, it is noted that the claims provided by applicant include several claims which are dependent on claim 0. Note specifically, claims 2, 4 and 6-8. The AESD includes claims which appear to be similar, however, claims 2, 4 and 6-8 depend on claim 1.

Therefore, the petition fails to meet the required conditions to be accorded special status under the accelerated examination procedure.

DECISION

For the above-stated reasons, the petition is dismissed. The application will therefore be taken up by the examiner in its regular turn.

Petitioner is given a single opportunity to perfect the petition. Any request for reconsideration of this decision must be submitted within 1 (one) month or 30 (thirty) days, whichever is longer, (no extension of time under 37 CFR 1.136(a)) from the date of this decision in order to be considered timely. Any request for reconsideration must address the deficiencies indicated above.

Petitioner is reminded that, upon granting of the special status of the application on request for reconsideration, the application will be processed expeditiously. However, due to the dismissal of the instant petition, examination may not be completed within twelve months of the filing date of the application.

Any inquiry regarding this decision should be directed to Christine Tierney, Quality Assurance Specialist, at (571) 272-1055.

/ Christine Tierney /

Christine Tierney
Quality Assurance Specialist
Technology Center 1700

UNITED STATES PATENT AND TRADEMARK OFFICE

UNITED STATES DEPARTMENT OF COMMERCE
United States Patent and Trademark Office
Address: COMMISSIONER FOR PATENTS
P.O. Box 1450
Alexandria, Virginia 22313-1450
www.uspto.gov

APPLICATION NO.	FILING DATE	FIRST NAMED INVENTOR	ATTORNEY DOCKET NO.	CONFIRMATION NO.
12/116,873	05/07/2008	Darren Anderson	2007428-0015 (NNT-003AE)	7916

24280 7590 07/24/2008
CHOATE, HALL & STEWART LLP
TWO INTERNATIONAL PLACE
BOSTON, MA 02110

EXAMINER

ART UNIT	PAPER NUMBER
1794	

NOTIFICATION DATE	DELIVERY MODE
07/24/2008	ELECTRONIC

Please find below and/or attached an Office communication concerning this application or proceeding.

The time period for reply, if any, is set in the attached communication.

Notice of the Office communication was sent electronically on above-indicated "Notification Date" to the following e-mail address(es):

patentdocket@choate.com

UNITED STATES PATENT AND TRADEMARK OFFICE

Commissioner for Patents
United States Patent and Trademark Office
P.O. Box 1450
Alexandria, VA 22313-1450
www.uspto.gov

CST

7-24-08

In re application of Darren Anderson et al Serial No. 12/116,873 Filed: May 7, 2008 For: NANOPARTICLES CONFINED IN POLYELECTROLYTES	: : : : :	DECISION ON PETITION TO MAKE SPECIAL

This is a decision on the Request for Reconsideration of Petition to Make Special under the Accelerated Examination Program filed on July 18, 2008 to make the above-identified application special.

The petition to make the application special is **GRANTED.**

The application is eligible for accelerated examination and the petition complies with the conditions for granting the application special status pursuant to the "Change to Practice for Petitions in Patent Applications to Make Special and for Accelerated Examination" published June 26, 2006, in the Federal Register. (71 Fed. Reg. 36323).

The prosecution of the instant application will be conducted expeditiously according to the following guidelines.

1. The application will be docketed to an examiner and taken up for action within two weeks of the date of this decision.

2. Restriction Practice:
   If the examiner determines that the claims are not directed to a single invention, a telephone request to elect one single invention will be made pursuant to MPEP 812.01. As a prerequisite to the grant of this petition, the applicant has agreed to make an oral election, by telephone, without traverse. If the applicant refuses to make an election without traverse, or the examiner cannot reach the applicant after a reasonable effort, the examiner will treat the first claimed invention (invention defined by claim 1) as having being constructively elected without traverse for examination.

3. Office action:
   If it is determined that, after appropriate consultation, there is a potential rejection or any other issue to be addressed, the examiner will telephone the applicant and arrange an interview to discuss and resolve the issue. An Office action, other than a Notice of Allowance and Fee(s) Due (Notice of Allowance), will not be issued unless either: 1) an interview was conducted but did not result in agreed to action that places the application in condition for allowance, or, 2) a determination is made that an interview would be unlikely to result in the application being placed in condition for allowance, and 3) an internal conference has been held to review any rejection of any claim.

4. Time for Reply:
   An Office action other than a Notice of Allowance or a final Office action will set a shortened statutory period of one month or thirty days, whichever is longer, for reply with no extension of time available under 37 CFR 1.136(a). Failure to timely file a reply within this non-extendible period for reply will result in the abandonment of the application.

5. Reply by Applicant:
   A timely reply to an Office action other than the Notice of Allowance must be submitted electronically via EFS or EFS-web and limited to addressing the rejections, objections and requirement made. Any amendment that attempts to: 1) add claims which would result in more than three pending independent claims or more than twenty pending total claims; 2) present claims not encompassed by the pre-examination search or an updated accelerated examination support document; or 3) present claims that are directed a non-elected invention or an invention other than that previously claimed and examined in the application, will be treated as not fully responsive and will not be entered.

   For any amendment to the claims (including any new claim) that is not encompassed by the accelerated examination support document, applicant must provide an updated accelerated examination support document that encompasses the amended or new claims at the time of filing of the amendment.

   To proceed expeditiously with the examination, it is recommended that a reply with amendments made to any claim or with any new claim being added be accompanied by an updated accelerated examination support document or a statement explaining how the amended or new claim is supported by the original accelerated examination support document.

6. Information Disclosure Statement (IDS):
   Any IDS filed during prosecution must be submitted electronically via EFS or EFS-web, accompanied by an updated accelerated examination support document, and be in compliance with 37 CFR 1.97 and 1.98.

7. Post-Allowance Processing:
   To expedite processing of the allowed application into a patent, the applicant must: 1) pay the required fees within one month of the date of the Notice of Allowance, and 2) not file any post allowance papers not required by the Office. In no event may the issue fee be paid and accepted later than three months from the date of the Notice of Allowance.

8. After-Final and Appeal Procedures:
   To expedite prosecution, after receiving the final Office action, applicant must: 1) promptly file a notice of appeal, an appeal brief and appeal fees; and 2) not request a pre-appeal brief conference.

   Any amendment, affidavit or other evidence filed after final Office action must comply with applicable rules and the requirements outlined in numbered paragraphs 5 and 6 above.

   On appeal, the application will proceed according to normal appeal procedures. After appeal, the application will again be treated special.

9. Proceedings Outside the Normal Examination Process:
   If the application becomes involved in a proceeding that is outside the normal examination process (e.g., a secrecy order, national security review, interference proceeding, petitions under 37 CFR 1.181, 182 or 183), the application will be treated special before and after such proceeding.

10. Final Disposition:
    The twelve month goal of this accelerated examination procedure ends with a final disposition. The mailing of a final Office action, a Notice of Allowance, the filing of a Notice of Appeal, or the filing of a Request for Continued Examination (RCE) is the final disposition.

If, during prosecution, a paper is not filed electronically using EFS-web, a reply is filed but is not fully responsive, the application is involved in an appeal, or a proceeding outside normal examination process, the application will still be examined expeditiously, however, the final disposition may occur more than twelve months from the filing of the application.

Any inquiry regarding this decision should be directed to Christine Tierney, Quality Assurance Specialist, at (571) 272-1055.

/Christine Tierney/

Christine Tierney
Quality Assurance Specialist
Technology Center 1700

UNITED STATES PATENT AND TRADEMARK OFFICE

UNITED STATES DEPARTMENT OF COMMERCE
United States Patent and Trademark Office
Address: COMMISSIONER FOR PATENTS
P.O. Box 1450
Alexandria, Virginia 22313-1450
www.uspto.gov

APPLICATION NO.	FILING DATE	FIRST NAMED INVENTOR	ATTORNEY DOCKET NO.	CONFIRMATION NO.
12/116,877	05/07/2008	Darren Anderson	2007428-0016 (NNT-004AE)	7921

24280 7590 07/17/2008
CHOATE, HALL & STEWART LLP
TWO INTERNATIONAL PLACE
BOSTON, MA 02110

EXAMINER
WYSZOMIERSKI, GEORGE P

ART UNIT	PAPER NUMBER
1793	

NOTIFICATION DATE	DELIVERY MODE
07/17/2008	ELECTRONIC

Please find below and/or attached an Office communication concerning this application or proceeding.

The time period for reply, if any, is set in the attached communication.

Notice of the Office communication was sent electronically on above-indicated "Notification Date" to the following e-mail address(es):

patentdocket@choate.com

UNITED STATES PATENT AND TRADEMARK OFFICE

Commissioner for Patents
United States Patent and Trademark Office
P.O. Box 1450
Alexandria, VA 22313-1450
www.uspto.gov

CST

7-17-08

In re application of Darren J. Anderson et al Serial No. 12/116,877 Filed: May 7, 2008 For: PRODUCING NANOPARTICLES USING NANOSCALE POLYMER TEMPLATES	:	DECISION ON PETITION TO MAKE SPECIAL

This is a decision on the petition filed on May 7, 2008 to make the above-identified application special under the accelerated examination program.

The petition to make the application special is **DISMISSED.**

REGULATION AND PRACTICE

A grantable petition to make special under 37 C.F.R. § 1.102(d) and pursuant to the "Change to Practice for Petitions in Patent Applications to Make Special and for Accelerated Examination" published in the Federal Register on June 26, 2006 (71 Fed. Reg. 36323), must satisfy the following conditions:

I. Conditions Regarding the Application:

1. the application must be a non-reissue utility or design application filed under 37 CFR 1.111(a);
2. the application, the petition and the required fees must be filed electronically using the USPTO's electronic filing system (EFS), or EFS-web; if not filed electronically, a statement asserting that EFS and EFS-web were not available during the normal business hours;
3. at the time of filing, the application must be complete under 37 CFR 1.51 and in condition for examination;
4. the application must contain three or fewer independent claims and twenty or fewer total claims and the claims must be directed to a single invention.

II. Conditions Regarding the Petition:

The petition must:

1. be filed with the application;
2. include a statement that applicant agrees not to separately argue the patentability of any dependent claim during any appeal in the application;

3. include a statement that applicant agrees to make an election without traverse in a telephone interview;

4. include a statement that applicant agrees to conduct such an interview when requested by the examiner;

5. include a statement, made based on a good faith belief, that a preexamination search in compliance with the following requirements, was conducted, including an identification of the field of search by United States class and subclass, where applicable, and for database searches, the search logic or chemical structure or sequence used as a query, the name of the file(s) searched and the database service, and the date of the search.

The preexamination search must:

5.1 involve U.S. patents and patent application publications, foreign patent documents, and non-patent literature, unless the applicant can justify with reasonable certainty that no references more pertinent than those already identified are likely to be found in the eliminated sources and includes such a justification with this statement;

5.2. be directed to the claimed invention and encompass all of the features of the claims, giving the claims the broadest reasonable interpretation;

5.3. encompass the disclosed features that may be claimed.

6. must provide in support of the petition an accelerated examination support document.

An accelerated examination support document must include:

6.1. an information disclosure statement (IDS) in compliance with 37 CFR 1.98 citing each reference deemed most closely related to the subject matter of each of the claims;

6.2. an identification of all the limitations in the claims that are disclosed by the reference specifying where the limitation is disclosed in the cited reference;

6.3. a detailed explanation of how each of the claims are patentable over the references cited with particularity required by 37 CFR 1.111(b) and (c);

6.4. a concise statement of the utility of the invention as defined in each of the independent claims (unless the application is a design application);

6.5. a showing of where each limitation of the claims finds support under 35 USC 112, first paragraph, in the written description of the specification. If applicable, the showing must also identify: (1) each means- (or step) plus-function claim element that invokes consideration under 35 USC 112, sixth paragraph; and (2) the structure, material, or acts in the specification that corresponds to each means- (or step) plus-function claim element that invokes consideration under 35 USC 112, sixth paragraph; if the application claims the benefit of one or more applications under title 35, United States Code, the showing must also include where each limitation of the claims finds support under 35 USC 112, first paragraph, in each such application in which such supports exists;

6.6. an identification of any cited references that may be disqualified under 35 USC 103(c).

REVIEW OF FACTS

The conditions regarding the application (section I, subsections 1-4) discussed above are considered to have been met. Additionally, the conditions regarding the petition, section II, subsections 1-4 and 6, are considered to have been met. However, the petition fails to comply with condition II, subsection 5.

It appears that the search is incomplete. Note that a search in Class 524/subclass 430 is also required.

Therefore, the petition fails to meet the required conditions to be accorded special status under the accelerated examination procedure.

DECISION

For the above-stated reasons, the petition is dismissed. The application will therefore be taken up by the examiner in its regular turn.

Petitioner is given a single opportunity to perfect the petition. Any request for reconsideration of this decision must be submitted within 1 (one) month or 30 (thirty) days, whichever is longer, (no extension of time under 37 CFR 1.136(a)) from the date of this decision in order to be considered timely. Any request for reconsideration must address the deficiencies indicated above.

Petitioner is reminded that, upon granting of the special status of the application on request for reconsideration, the application will be processed expeditiously. However, due to the dismissal of the instant petition, examination may not be completed within twelve months of the filing date of the application.

Any inquiry regarding this decision should be directed to Christine Tierney, Quality Assurance Specialist, at (571) 272-1055.

/ Christine Tierney /

Christine Tierney
Quality Assurance Specialist
Technology Center 1700

UNITED STATES PATENT AND TRADEMARK OFFICE

UNITED STATES DEPARTMENT OF COMMERCE
United States Patent and Trademark Office
Address: COMMISSIONER FOR PATENTS
P.O. Box 1450
Alexandria, Virginia 22313-1450
www.uspto.gov

APPLICATION NO.	FILING DATE	FIRST NAMED INVENTOR	ATTORNEY DOCKET NO.	CONFIRMATION NO.
12/116,877	05/07/2008	Darren Anderson	2007428-0016 (NNT-004AE)	7921

24280 7590 09/12/2008
CHOATE, HALL & STEWART LLP
TWO INTERNATIONAL PLACE
BOSTON, MA 02110

EXAMINER
WYSZOMIERSKI, GEORGE P

ART UNIT	PAPER NUMBER
1793	

NOTIFICATION DATE	DELIVERY MODE
09/12/2008	ELECTRONIC

Please find below and/or attached an Office communication concerning this application or proceeding.

The time period for reply, if any, is set in the attached communication.

Notice of the Office communication was sent electronically on above-indicated "Notification Date" to the following e-mail address(es):

patentdocket@choate.com

UNITED STATES PATENT AND TRADEMARK OFFICE

Commissioner for Patents
United States Patent and Trademark Office
P.O. Box 1450
Alexandria, VA 22313-1450
www.uspto.gov

CST

9-12-08

In re application of Darren J. Anderson et al Serial No. 12/116,877 Filed: May 7, 2008 For: PRODUCING NANOPARTICLES USING NANOSCALE POLYMER TEMPLATES	DECISION ON PETITION TO MAKE SPECIAL

This is a decision on the Request for Reconsideration of Petition to Make Special under the Accelerated Examination Program filed on August 18, 2008 to make the above-identified application special.

The petition to make the application special is **GRANTED.**

The application is eligible for accelerated examination and the petition complies with the conditions for granting the application special status pursuant to the "Change to Practice for Petitions in Patent Applications to Make Special and for Accelerated Examination" published June 26, 2006, in the Federal Register. (71 Fed. Reg. 36323).

The prosecution of the instant application will be conducted expeditiously according to the following guidelines.

1. The application will be docketed to an examiner and taken up for action within two weeks of the date of this decision.

2. Restriction Practice:
   If the examiner determines that the claims are not directed to a single invention, a telephone request to elect one single invention will be made pursuant to MPEP 812.01. As a prerequisite to the grant of this petition, the applicant has agreed to make an oral election, by telephone, without traverse. If the applicant refuses to make an election without traverse, or the examiner cannot reach the applicant after a reasonable effort, the examiner will treat the first claimed invention (invention defined by claim 1) as having being constructively elected without traverse for examination.

3. Office action:
   If it is determined that, after appropriate consultation, there is a potential rejection or any other issue to be addressed, the examiner will telephone the applicant and arrange an interview to discuss and resolve the issue. An Office action, other than a Notice of Allowance and Fee(s) Due (Notice of Allowance), will not be issued unless either: 1) an interview was conducted but did not result in agreed to action that places the application in condition for allowance, or, 2) a determination is made that an interview would be unlikely to result in the application being placed in condition for allowance, and 3) an internal conference has been held to review any rejection of any claim.

4. Time for Reply:
   An Office action other than a Notice of Allowance or a final Office action will set a shortened statutory period of one month or thirty days, whichever is longer, for reply with no extension of time available under 37 CFR 1.136(a). Failure to timely file a reply within this non-extendible period for reply will result in the abandonment of the application.

5. Reply by Applicant:
   A timely reply to an Office action other than the Notice of Allowance must be submitted electronically via EFS or EFS-web and limited to addressing the rejections, objections and requirement made. Any amendment that attempts to: 1) add claims which would result in more than three pending independent claims or more than twenty pending total claims; 2) present claims not encompassed by the pre-examination search or an updated accelerated examination support document; or 3) present claims that are directed a non-elected invention or an invention other than that previously claimed and examined in the application, will be treated as not fully responsive and will not be entered.

   For any amendment to the claims (including any new claim) that is not encompassed by the accelerated examination support document, applicant must provide an updated accelerated examination support document that encompasses the amended or new claims at the time of filing of the amendment.

   To proceed expeditiously with the examination, it is recommended that a reply with amendments made to any claim or with any new claim being added be accompanied by an updated accelerated examination support document or a statement explaining how the amended or new claim is supported by the original accelerated examination support document.

6. Information Disclosure Statement (IDS):
   Any IDS filed during prosecution must be submitted electronically via EFS or EFS-web, accompanied by an updated accelerated examination support document, and be in compliance with 37 CFR 1.97 and 1.98.

7. Post-Allowance Processing:
   To expedite processing of the allowed application into a patent, the applicant must: 1) pay the required fees within one month of the date of the Notice of Allowance, and 2) not file any post allowance papers not required by the Office. In no event may the issue fee be paid and accepted later than three months from the date of the Notice of Allowance.

8. After-Final and Appeal Procedures:
   To expedite prosecution, after receiving the final Office action, applicant must: 1) promptly file a notice of appeal, an appeal brief and appeal fees; and 2) not request a pre-appeal brief conference.

   Any amendment, affidavit or other evidence filed after final Office action must comply with applicable rules and the requirements outlined in numbered paragraphs 5 and 6 above.

   On appeal, the application will proceed according to normal appeal procedures. After appeal, the application will again be treated special.

9. Proceedings Outside the Normal Examination Process:
   If the application becomes involved in a proceeding that is outside the normal examination process (e.g., a secrecy order, national security review, interference proceeding, petitions under 37 CFR 1.181, 182 or 183), the application will be treated special before and after such proceeding.

10. Final Disposition:
    The twelve month goal of this accelerated examination procedure ends with a final disposition. The mailing of a final Office action, a Notice of Allowance, the filing of a Notice of Appeal, or the filing of a Request for Continued Examination (RCE) is the final disposition.

If, during prosecution, a paper is not filed electronically using EFS-web, a reply is filed but is not fully responsive, the application is involved in an appeal, or a proceeding outside normal examination process, the application will still be examined expeditiously, however, the final disposition may occur more than twelve months from the filing of the application.

Any inquiry regarding this decision should be directed to Christine Tierney, Quality Assurance Specialist, at (571) 272-1055.

/Christine Tierney/

Christine Tierney
Quality Assurance Specialist
Technology Center 1700

UNITED STATES PATENT AND TRADEMARK OFFICE

UNITED STATES DEPARTMENT OF COMMERCE
United States Patent and Trademark Office
Address: COMMISSIONER FOR PATENTS
P.O. Box 1450
Alexandria, Virginia 22313-1450
www.uspto.gov

APPLICATION NO.	FILING DATE	FIRST NAMED INVENTOR	ATTORNEY DOCKET NO.	CONFIRMATION NO.
12/116,880	05/07/2008	Hiroyuki Moro	TOTOSH.026AUS	7931

EXAMINER

7590 01/11/2010
KNOBBE MARTENS OLSON & BEAR LLP
2040 MAIN STREET
FOURTEENTH FLOOR
IRVINE, CA 92614

ART UNIT	PAPER NUMBER
2627	

NOTIFICATION DATE	DELIVERY MODE
01/11/2010	ELECTRONIC

DECISION GRANTING PETITION UNDER 37 CFR 1.138(d)

The declaration of express abandonment is recognized

This is in response to the petition under 37 CFR 1.138(d), requesting for a refund of any previously paid search fee and excess claims fee in the above-identified application.

The petition is granted.

The express abandonment is recognized. Any previously paid search fee and excess claims fee are hereby refunded.

Telephone inquiries should be directed to the Office of Data Management at (571) 272-4200.

Patent Publication Branch
Office of Data Management

Refund Ref:
01/11/2010 6033378607

Credit Card Refund Total: [illegible]

Account [illegible]

Adjustment date: 01/11/2010 NFARMER
[illegible] INTEFSW [illegible] 12116880
02 FC:1111 -510.33 OP

FORM PET651G (Rev. 08/07)

UNITED STATES PATENT AND TRADEMARK OFFICE

UNITED STATES DEPARTMENT OF COMMERCE
United States Patent and Trademark Office
Address: COMMISSIONER FOR PATENTS
P.O. Box 1450
Alexandria, Virginia 22313-1450
www.uspto.gov

MARGER JOHNSON & MCCOLLOM, P.C.
210 SW MORRISON STREET, SUITE 400
PORTLAND, OR 97204

Mail Date: 07/01/2010

Applicant	: BICH NGUYEN	: DECISION ON REQUEST FOR
Patent Number	: 7644176	: RECALCULATION of PATENT
Issue Date	: 01/05/2010	: TERM ADJUSTMENT IN VIEW
Application No	: 12/116,898	: OF WYETH AND NOTICE OF INTENT TO
Filed	: 05/07/2008	: ISSUE CERTIFICATE OF CORRECTION
		:

The Request for Recalculation is **GRANTED** to the extent indicated.

The patent term adjustment has been determined to be **0** days. The USPTO will *sua sponte* issue a certificate of correction reflecting the amount of PTA days determined by the recalculation.

Prior to the issuance of the certificate of correction, the USPTO will afford patentee an opportunity to be heard and request reconsideration. Accordingly, patentee has **one month or thirty (30) days**, whichever is longer, to file a request for reconsideration of this patent term adjustment calculation. See 35 U.S.C. 154(b)(3)(B)(ii) and 37 CFR 1.322(a)(4). No extensions of time will be granted under 37 CFR 1.136.

Patentee should use document code PET.OP if electronically filing a request for reconsideration of this patent term adjustment calculation. The patentee must also include the information required by 37 CFR 1.705(b)(2) and the fee required by 37 CFR 1.18(e). If patentee does not file a timely request for reconsideration of this patent term adjustment calculation including the information required by 37 CFR 1.705(b)(2) and the fee required by 37 CFR 1.18(e), the USPTO will issue a certificate of correction reflecting the PTA determination noted above.

Patentee should be aware that in order to preserve the right to review in the United States District Court for the District of Columbia of the USPTO patent term adjustment determination, patentee must ensure that he or she also take the steps required under 35 U.S.C. 154(b)(4)(A) in a timely manner. Nothing in the request for recalculation should be construed as providing an alternative time frame for commencing a civil action under 35 U.S.C. 154(b)(4)(A).

Any questions concerning this decision should be directed to the Office of Patent Legal Administration at 571-272-7702.

UNITED STATES PATENT AND TRADEMARK OFFICE

Commissioner for Patents
United States Patent and Trademark Office
P.O. Box 1450
Alexandria, VA 22313-1450
www.uspto.gov

PATENT LAW PROFESSIONALS
P.O. BOX 612407
SAN JOSE, CA 95161

MAILED

MAY 07 2010

OFFICE OF PETITIONS

In re Patent No. 7,696,018	:	
Issued: April 13, 2010	:	DECISION ON PETITION
Application No. 12/116,911	:	TO WITHDRAW
Filed: May 7, 2008	:	FROM RECORD
Attorney Docket No. 30-019US	:	

This is a decision on the Request to Withdraw as attorney or agent of record under 37 C.F.R. § 1.36(b), filed November 23, 2009.

The request is **DISMISSED** as involving a moot issue.

A review of the file record indicates that the power of attorney to the attorneys/agents associated with Customer Number 63409 was revoked by the assignee of the patent application on November 27, 2009. Accordingly, the request to withdraw under 37 C.F.R. § 1.36(b) is moot.

All future communications from the Office will be directed to the below-listed address until otherwise properly notified.

Telephone inquires concerning this decision should be directed to the undersigned at 571-272-3206. All other inquires concerning either the examination or status of the application should be directed to the Technology Center.

Liana Walsh
Petitions Examiner
Office of Petitions

cc: JAMES M. WU
JW LAW GROUP
84 W. SANTA CLARA STREET
SUITE 820
SAN JOSE CA 95113

UNITED STATES PATENT AND TRADEMARK OFFICE

UNITED STATES DEPARTMENT OF COMMERCE
United States Patent and Trademark Office
Address: COMMISSIONER FOR PATENTS
P.O. Box 1450
Alexandria, Virginia 22313-1450
www.uspto.gov

APPLICATION NO.	FILING DATE	FIRST NAMED INVENTOR	ATTORNEY DOCKET NO.	CONFIRMATION NO.
12/116,935	05/07/2008	Michael S. Gordon	YOR920070737	8047

79046 7590 06/27/2008
THORNE & HALAJIAN, LLP
111 WEST MAIN STREET
BAY SHORE, NY 11706

EXAMINER

ART UNIT	PAPER NUMBER
2881	

MAIL DATE	DELIVERY MODE
06/27/2008	PAPER

Please find below and/or attached an Office communication concerning this application or proceeding.

The time period for reply, if any, is set in the attached communication.

UNITED STATES PATENT AND TRADEMARK OFFICE

Commissioner for Patents
United States Patent and Trademark Office
P.O. Box 1450
Alexandria, VA 22313-1450
www.uspto.gov

THORNE & HALAJIAN, LLP
111 West Main Street
Bay Shore, NY 11706

In re Application of:	:	
Michael S. Gordon et al.	:	DECISION ON PETITION TO
Serial No.: 12/116,935	:	MAKE SPECIAL FOR NEW
Filed: May 7, 2008	:	APPLICATION UNDER 37
Attorney Docket No.: YOR920070737	:	C.F.R. § 1.102 & M.P.E.P. § 708.2

This is a decision on the petition filed on May 7, 2008 to make the above-identified application special for accelerated examination procedure under 37 C.F.R. § 1.102(d).

The petition to make the application special is **DISMISSED**.

REGULATION AND PRACTICE

A grantable petition to make special under 37 C.F.R. § 1.102(d) and pursuant to the "Change to Practice for Petitions in Patent Applications to Make Special and for Accelerated Examination" published in the Federal Register on June 26, 2006 (71 Fed. Reg. 36323), must satisfy the following conditions:

I. Conditions Regarding the Application:

1. the application must be a non-reissue utility or design application filed under 37 CFR 1.111(a);
2. the application, the petition and the required fees must be filed electronically using the USPTO's electronic filing system (EFS), or EFS-web; if not filed electronically, a statement asserting that EFS and EFS-web were not available during the normal business hours.
3. at the time of filing, the application must be complete under 37 CFR 1.51 and in condition for examination;
4. the application must contain three or fewer independent claims and twenty or fewer total claims and the claims must be directed to a single invention.

II. Conditions Regarding the Petition:

The petition must:

1. be filed with the application;

2. include a statement that applicant agrees not to separately argue the patentability of any independent claim during any appeal in the application;

3. include a statement that applicant agrees to make an election without traverse in a telephone interview;

4. include a statement that applicant agrees to conduct such an interview when requested by the examiner; and

5. include a statement, made based on a good faith belief, that a preexamination search in compliance with the following requirements, was conducted, including an identification of the field of search by United States class and subclass, where applicable, and for database searches, the search logic or chemical structure or sequence used as a query, the name of the file(s) searched and the database service, and the date of the search.

The preexamination search must:

5.1 involve U.S. patents and patent application publications, foreign patent documents, and non-patent literature, unless the applicant can justify with reasonable certainty that no references more pertinent than those already identified are likely to be found in the eliminated sources and includes such a justification with this statement;

5.2. be directed to the claimed invention and encompass all of the features of the claims, giving the claims the broadest reasonable expectation; and

5.3. encompass the disclosed features that may be claimed.

6. must provide in support of the petition an accelerated examination support document. An accelerated examination support document must include:

6.1. an information disclosure statement (IDS) in compliance with 37 CFR 1.98 citing each reference deemed most closely related to the subject matter of each of the claims;

6.2. an identification of all the limitations in the claims that are disclosed by the reference specifying where the limitation is disclosed in the cited reference;

6.3. a detailed explanation of how each of the claims are patentable over the references cited with particularity required by 37 CFR 1.111(b) and (c);

6.4. a concise statement of the utility of the invention as defined in each of the independent claims (unless the application is a design application);

6.5. a showing of where each limitation of the claims finds support under 35 USC 112, first paragraph, in the written description of the specification. If applicable, the showing must also identify: (1) each means- (or step) plus-function claim element that invokes consideration under 35 USC 112, sixth paragraph; and (2) the structure, material, or acts in the specification that corresponds to each means- (or step) plus-function claim element that invokes consideration under 35 USC 112, sixth paragraph; if the application claims the benefit of one or more applications under title 35, United States Code, the showing must also include where each limitation of the claims finds support under 35 USC 112, first paragraph, in each such application in which such supports exists; and

6.6. an identification of any cited references that may be disqualified under 35 USC 103(c).

REVIEW OF FACTS

The conditions set forth in section I, subsections 1-4, are considered to have been met. Additionally, the conditions set forth in section II, subsections 1-4, are considered to have been met. However, the petition fails to comply with the all the conditions set forth in section II, subsections 5 and 6, specifically subsections 5.2, 6.4 and 6.5. Therefore, the petition fails to meet the required conditions to be accorded special status under the accelerated examination procedure.

Regarding the requirements of section II, subsection 5.2, it appears the search outlined in the petition omitted critical search areas by not searching in class 250, subclasses 492.1 and 492.3. Any renewed petition should include the above outlined additional searching.

Regarding the requirements of section II, subsection 6.4, the concise statement of utility refers to claims 2 and 3 (see the last two lines). However, the application includes only a single claim 1. Furthermore, besides mentioning claim 1 and non-existent dependent claims as patentably distinguishing over the references under the "Concise Statement of Utility" section, the first sentence under the given section is not a complete sentence and does not qualify as a concise statement of utility.

Regarding the requirements of section II, subsection 6.5, the support document supplied by the petitioner does not specifically show where ***each limitation*** (italics added) of the claims finds support under 35 USC 112, first paragraph in the written description of the specification. There are several instances where the support document only provides drawing label numbers for the claimed limitations and does not refer to any page and line of the specification where support can be found.

DECISION

For the above-stated reasons, the petition is **dismissed**. The application will therefore be taken up by the examiner for action in its regular turn.

Petitioner is given a single opportunity to perfect the petition. Any request for reconsideration of this decision must be submitted within 1 (one) month or 30 (thirty) days, whichever is longer, from the date of this decision in order to be considered timely. Any request for reconsideration must address the deficiencies indicated above.

Petition is reminded that, upon granting of the special status of the application on request for reconsideration, the application will be processed expeditiously. However, due to the dismissal of the instant petition, examination may not be completed within twelve months of the filing date of the application.

Any inquiries regarding this decision should be directed to Quality Assurance Specialist Edward Westin at (571) 272-1638.

Edward Westin

Edward Westin, Quality Assurance Specialist
Technology Center 2800
Semiconductors, Electrical and Optical
Systems and Components

UNITED STATES PATENT AND TRADEMARK OFFICE

UNITED STATES DEPARTMENT OF COMMERCE
United States Patent and Trademark Office
Address: COMMISSIONER FOR PATENTS
P.O. Box 1450
Alexandria, Virginia 22313-1450
www.uspto.gov

APPLICATION NO.	FILING DATE	FIRST NAMED INVENTOR	ATTORNEY DOCKET NO.	CONFIRMATION NO.
12/116,935	05/07/2008	Michael S. Gordon	YOR920070737	8047

79046 7590 08/28/2008
THORNE & HALAJIAN, LLP
111 WEST MAIN STREET
BAY SHORE, NY 11706

EXAMINER
KIM, ROBERT H

ART UNIT	PAPER NUMBER
2881	

MAIL DATE	DELIVERY MODE
08/28/2008	PAPER

Please find below and/or attached an Office communication concerning this application or proceeding.

The time period for reply, if any, is set in the attached communication.

UNITED STATES PATENT AND TRADEMARK OFFICE

Commissioner for Patents
United States Patent and Trademark Office
P.O. Box 1450
Alexandria, VA 22313-1450
www.uspto.gov

THORNE & HALAJIAN, LLP
111 West Main Street
Bay Shore, NY 11706

In re Application of: Michael S. Gordon et al. Serial No.: 12/116,935 Filed: May 7, 2008 Docket Number: YOR920070737 Title: TANDEM ACCELERATOR HAVING LOW-ENERGY STATIC VOLTAGE INJECTION AND METHOD OF OPERATION THEREOF	:	DECISION ON RENEWED PETITION TO MAKE SPECIAL UNDER 37 C.F.R. § 1.102 & M.P.E.P. § 708.2

This is a decision on the renewed petition filed on July 25, 2008 to make the above-identified application special for accelerated examination procedure under 37 C.F.R. §1.102(d).

The renewed petition to make the application special is GRANTED.

The application is eligible for accelerated examination and the petition complies with the conditions for granting the application special status pursuant to the "Change to Practice for Petitions in Patent Applications to Make Special and for Accelerated Examination" published June 26, 2006, in the Federal Register. (71 Fed. Reg. 36323).

The prosecution of the instant application will be conducted expeditiously according to the following guidelines.

1. The application will be docketed to an examiner and taken up for action within two weeks of the date of this decision.

2. Restriction Practice:
   If the examiner determines that the claims are not directed to a single invention, a telephone request to elect one single invention will be made pursuant to MPEP 812.01. As a prerequisite to the grant of this petition, the applicant has agreed to make an oral election, by telephone, without traverse. If the applicant refuses to make an election without traverse, or the examiner cannot reach the applicant after a reasonable effort, the examiner will treat the first claimed invention (invention defined by claim 1) as having being constructively elected without traverse for examination.

3. Office action:
   If it is determined that, after appropriate consultation, there is a potential rejection or any

other issue to be addressed, the examiner will telephone the applicant and arrange an interview to discuss and resolve the issue. An Office action, other than a Notice of Allowance and Fee(s) Due (Notice of Allowance), will not be issued unless either: 1) an interview was conducted but did not result in agreed to action that places the application in condition for allowance, or, 2) a determination is made that an interview would be unlikely to result in the application being placed in condition for allowance, and 3) an internal conference has been held to review any rejection of any claim.

4. Time for Reply:
An Office action other than a Notice of Allowance or a final Office action will set a shortened statutory period of one month or thirty days, whichever is longer, for reply with no extension of time available under 37 C.F.R. §1.136(a). Failure to timely file a reply within this non-extendible period for reply will result in the abandonment of the application.

5. Reply by Applicant:
A timely reply to an Office action other than the Notice of Allowance must be submitted electronically via EFS or EFS-web and limited to addressing the rejections, objections and requirement made. Any amendment that attempts to: 1) add claims which would result in more than three pending independent claims or more than twenty pending total claims; 2) present claims not encompassed by the pre-examination search or an updated accelerated examination support document; or 3) present claims that are directed a non-elected invention or an invention other than that previously claimed and examined in the application, will be treated as not fully responsive and will not be entered.

For any amendment to the claims (including any new claim) that is not encompassed by the accelerated examination support document, applicant must provide an updated accelerated examination support document that encompasses the amended or new claims at the time of filing of the amendment.

To proceed expeditiously with the examination, it is recommended that a reply with amendments made to any claim or with any new claim being added be accompanied by an updated accelerated examination support document or a statement explaining how the amended or new claim is supported by the original accelerated examination support document.

6. Information Disclosure Statement (IDS):
Any IDS filed during prosecution must be submitted electronically via EFS or EFS-web, accompanied by an updated accelerated examination support document, and be in compliance with 37 C.F.R. §1.97 and §1.98.

7. Post-Allowance Processing:
To expedite processing of the allowed application into a patent, the applicant must: 1) pay the required fees within one month of the date of the Notice of Allowance, and 2) not

file any post allowance papers not required by the Office. In no event may the issue fee be paid and accepted later than three months from the date of the Notice of Allowance.

8. After-Final and Appeal Procedures:
   To expedite prosecution, after receiving the final Office action, applicant must: 1) promptly file a notice of appeal, an appeal brief and appeal fees; and 2) not request a pre-appeal brief conference.

   Any amendment, affidavit or other evidence filed after final Office action must comply with applicable rules and the requirements outlined in numbered paragraphs 5 and 6 above.

   On appeal, the application will proceed according to normal appeal procedures. After appeal, the application will again be treated special.

9. Proceedings Outside the Normal Examination Process:
   If the application becomes involved in a proceeding that is outside the normal examination process (e.g., a secrecy order, national security review, interference proceeding, petitions under 37 C.F.R. §1.181, §1.182 or §1.183), the application will be treated special before and after such proceeding.

10. Final Disposition:
    The twelve-month goal of this accelerated examination procedure ends with a final disposition. The mailing of a final Office action, a Notice of Allowance, the filing of a Notice of Appeal, or the filing of a Request for Continued Examination (RCE) is the final disposition.

If, during prosecution, a paper is not filed electronically using EFS-web, a reply is filed but is not fully responsive, the application is involved in an appeal, or a proceeding outside normal examination process, the application will still be examined expeditiously, however, the final disposition may occur more than twelve months from the filing of the application.

Any inquiry regarding this decision should be directed to the undersigned at (571) 272-1638.

Edward Westin

Edward Westin, Quality Assurance Specialist
Technology Center 2800
Semiconductors, Electrical and Optical
Systems and Components

UNITED STATES PATENT AND TRADEMARK OFFICE

Commissioner for Patents
United States Patent and Trademark Office
P.O. Box 1450
Alexandria, VA 22313-1450
www.uspto.gov

BRIAN ROFFE, ESQ.
11 SUNRISE PLAZA, SUITE 303
VALLEY STREAM, NY 11580-6111

COPY MAILED

JUL 23 2008

In re Application of	:	
David S. BREED, et al	:	
Application No. 12/117,038	:	DECISION ON PETITION
Filed: May 8, 2008	:	TO MAKE SPECIAL UNDER
Attorney Docket No. AT1-422	:	37 CFR 1.102(c)(1)
	:	

This is a decision on the petition under 37 CFR 1.102(c)(1), filed June 30, 2008, to make the above-identified application special based on applicant's age as set forth in M.P.E.P. § 708.02, Section IV.

The petition is **GRANTED**.

A grantable petition to make an application special under 37 CFR 1.102(c)(1) and MPEP § 708.02, Section IV: Applicant's Age must be accompanied by evidence showing that at least one of the applicants is 65 years of age, or more, such as a birth certificate or a statement by applicant. No fee is required

The instant petition includes a copy of Applicant David S. Breed passport. Accordingly, the above-identified application has been accorded "special" status.

Telephone inquiries concerning this decision should be directed to the undersigned at 571-272-6735.

All other inquiries concerning either the examination or status of the application should be directed to the Technology Center.

The application is being forwarded to Technology Center Art Unit 3664 for action on the merits commensurate with this decision.

Diane Goodwyn
Petitions Examiner
Office of Petitions

UNITED STATES PATENT AND TRADEMARK OFFICE

Commissioner for Patents
United States Patent and Trademark Office
P.O. Box 1450
Alexandria, VA 22313-1450
www.uspto.gov

HEALTH HERO NETWORK, INC.
2400 GENG ROAD, SUITE 200
PALO ALTO, CA 94303

COPY MAILED
OCT 21 2008
OFFICE OF PETITIONS

In re Application of :
Stephen J. Brown :
Application No. 12/117,091 : DECISION REFUSING STATUS
Filed: May 8, 2008-10-15 : UNDER 37 CFR 1.47(b)
Attorney Docket No. 06-0616 :

This is a decision in response to the petition, filed May 8, 2008, under the provisions of 37 CFR 1.47(b). The $200 petition fee pursuant to 37 CFR 1.17(g) is being charged to counsel's deposit account as authorized.

The petition is **DISMISSED**.

Rule 47 applicant is given TWO (2) MONTHS from the mailing date of this decision to reply, correcting the below-noted deficiencies. Any reply should be entitled "Request for Reconsideration of Petition Under 37 CFR 1.47(b)," and should only address the deficiencies noted below, except that the reply may include an oath or declaration executed by the non-signing inventor. **FAILURE TO RESPOND WILL RESULT IN ABANDONMENT OF THE APPLICATION.** Any extensions of time will be governed by 37 CFR 1.136(a).

A grantable petition under 37 CFR 1.47(b) requires:

(1) proof that the non-signing inventor cannot be reached after diligent effort or refuses to sign the oath or declaration after having been presented with the application papers (specification, claims and drawings);
(2) an acceptable oath or declaration in compliance with 35 U.S.C. §§ 115 and 116;
(3) the petition fee;
(4) a statement of the last known address of the non-signing inventor.
(5) proof of proprietary interest: and
(6) proof of irreparable damage.

Applicant lacks item (2) set forth above. In this regard, the declaration submitted with the petition is not signed by the inventor, a person to whom an inventor has assigned or agreed in writing to assign the invention, or any person who otherwise shows sufficient proprietary interest in the invention.

Further correspondence with respect to this matter should be delivered through one of the following mediums:

By mail:	Mail Stop PETITIONS Commissioner for Patents Post Office Box 1450 Alexandria, VA 22313-1450
By hand:	Customer Service Window Mail Stop Petitions Randolph Building 401 Dulany Street Alexandria, VA 22314
By fax:	(571) 273-8300 ATTN: Office of Petitions
By internet:	EFS-Web[1]

Any questions concerning this matter may be directed to the undersigned at (571) 272-3204.

Sherry D. Brinkley

Sherry D. Brinkley
Petitions Examiner
Office of Petitions

[1] www.uspto.gov/ebc/efs_help.html (for help using EFS-Web call the Patent Electronic Business Center at (866) 217-9197)

UNITED STATES PATENT AND TRADEMARK OFFICE

Commissioner for Patents
United States Patent and Trademark Office
P.O. Box 1450
Alexandria, VA 22313-1450
www.uspto.gov

HEALTH HERO NETWORK, INC.
2400 GENG ROAD, SUITE 200
PALO ALTO, CA 94303

COPY MAILED

JAN 30 2009

OFFICE OF PETITIONS

In re Application of	:	
Stephen J. Brown	:	DECISION GRANTING STATUS
Application No. 12/117,091	:	UNDER 37 CFR 1.47(b)
Filed: May 8, 2008	:	
Attorney Docket No. 06-0616	:	

This is in response to the renewed petition under 37 CFR 1.47(b), filed October 31, 2008.

The petition is **GRANTED.**

Petitioner has shown that the non-signing inventor Stephen J. Brown has refused to join in the filing of the above-identified application.

The application and papers have been reviewed and found in compliance with 37 CFR 1.47(b). This application is hereby accorded Rule 1.47(b) status.

As provided in 37 CFR 1.47(c), this Office will forward notice of this application's filing to the non-signing inventor at the address given in the declaration. Notice of the filing of this application will also be published in the Official Gazette.

This application is being referred to the Office of Patent Application Processing for pre-examination processing.

Telephone inquiries regarding this decision should be directed to the undersigned at (571) 272-3204.

Sherry D. Brinkley
Petitions Examiner
Office of Petitions

UNITED STATES PATENT AND TRADEMARK OFFICE

Commissioner for Patents
United States Patent and Trademark Office
P.O. Box 1450
Alexandria, VA 22313-1450
www.uspto.gov

COPY MAILED

JAN 30 2009

OFFICE OF PETITIONS

STEPHEN J. BROWN
3324 WOODSIDE ROAD
WOODSIDE, CA 94062

In re Application of	:	
Stephen J. Brown	:	
Application No. 12/117,091	:	LETTER
For: MODULAR PROGRAMMABLE	:	
SAFETY DEVICE	:	

Dear Mr.Brown:

You are named as the inventor in the above-identified United States patent application filed under the provisions of 35 U.S.C. 116 (United States Code) and 37 CFR 1.47(b), Rules of Practice in Patent Cases. Should a patent be granted on the application you will be designated therein as the inventor.

As the named inventor you are entitled to inspect any paper in the file wrapper of the application, order copies of all or any part thereof (at a prepaid cost per 37 CFR 1.19) or make your position of record in the application. Alternatively, you may arrange to do any of the preceding through a registered patent attorney or agent presenting written authorization from you. If you care to join the application, counsel of record (see below) would presumably assist you. Joining in the application would entail the filing of an appropriate oath or declaration by you pursuant to 37 CFR 1.63.

Telephone inquiries regarding this communication should be directed to the undersigned at (571) 272-3204. Requests for information regarding your application should be directed to the File Information Unit at (703) 308-2733. Information regarding how to pay for and order a copy of the application, or a specific paper in the application, should be directed to Certification Division at (571)272 -3150 or 1-800-972-6382 (outside the Washington D.C. area).

/SDB/

Sherry D. Brinkley
Petitions Examiner
Office of Petitions

cc: HEALTH HERO NETWORK, INC.
2400 GENG ROAD, SUITE 200
PALO ALTO CA 94303

UNITED STATES PATENT AND TRADEMARK OFFICE

Commissioner for Patents
United States Patent and Trademark Office
P.O. Box 1450
Alexandria, VA 22313-1450
www.uspto.gov

HEALTH HERO NETWORK, INC.
2400 GENG ROAD, SUITE 200
PALO ALTO CA 94303

COPY MAILED

SEP 09 2008

OFFICE OF PETITIONS

In re Application of :
Brown : ON PETITION
Application No.: 12/117,114 :
Filed: May 8, 2008 :
Attorney Docket No.: 06-0617 :

This is in response to the petition under 37 CFR 1.47(b), filed May 8, 2008.

The petition is dismissed.

Any request for reconsideration of this decision must be submitted within TWO (2) MONTHS from the mail date of this decision. Extensions of time under 37 CFR 1.136(a) are permitted. Any response should be entitled "Request for Reconsideration of Petition Under 37 CFR 1.47(b)" and may include an oath or declaration executed by the inventor. **Failure to respond will result in abandonment of the application.**

A grantable petition under 37 CFR 1.47(b) requires:

(1) proof that the non-signing inventor cannot be reached or refuses to sign the oath or declaration;
(2) an acceptable oath or declaration;
(3) the petition fee;
(4) a statement of the last known address of the non-signing inventor;
(5) proof of proprietary interest; and
(6) proof of irreparable damage.

This petition lacks item (2) set forth above.

As to item (2), an oath or declaration for the patent application in compliance with 37 CFR 1.63 and 1.64 has not been presented. The declaration has not been signed by a properly empowered representative of the Rule 1.47 applicant. **No one** has signed the declaration. An oath or declaration in compliance with 37 CFR 1.63 and 1.64 listing Mr. Brown's information, signed by the Rule 1.47 applicant on behalf of Mr. Brown is REQUIRED. See MPEP 409.03(b).

MPEP 409.03(b) states that typically when a corporation is the Rule 47 applicant, an officer should sign the declaration and provide his/her title. Where an oath is signed by a registered attorney on behalf of a corporation, either proof of the attorney's authority in the form of a statement signed by an appropriate corporate officer must be submitted, or the attorney may simply state that he is authorized to sign on behalf of the corporation. The Rule 47 applicant must state his/her relationship to the inventor as required by 37 CFR 1.64.

Regarding fees, petitioner has been charged two $130.00 surcharges. Only one is required. However, the Rule 47 petition fee of $200.00 has not been charged yet. Therefore, one of the $130.00 surcharges will be applied towards the Rule 47 petition fee and the balance due, $70.00, will be charged to petitioner's deposit account.

Further correspondence with respect to this matter should be addressed as follows:

By mail: Mail Stop PETITION
Commissioner for Patents
Post Office Box 1450
Alexandria, VA 22313-1450

By hand: U.S. Patent and Trademark Office
Customer Service Window, Mail Stop Petition
Randolph Building
401 Dulany Street
Alexandria, VA 22314

By FAX: (571) 273-8300 - ATTN: Office of Petitions

Telephone inquiries should be directed to the undersigned at (571) 272-3230.

Shirene Willis Brantley
Senior Petitions Attorney
Office of Petitions

UNITED STATES PATENT AND TRADEMARK OFFICE

Commissioner for Patents
United States Patent and Trademark Office
P.O. Box 1450
Alexandria, VA 22313-1450
www.uspto.gov

HEALTH HERO NETWORK, INC.
2400 GENG ROAD, SUITE 200
PALO ALTO CA 94303

COPY MAILED

OCT 0 9 2008

OFFICE OF PETITIONS

In re Application of :
Brown : ON PETITION
Application No.: 12/117,114 :
Filed: May 8, 2008 :
Attorney Docket No.: 06-0617 :

This is in response to the reconsideration petition under 37 CFR 1.47(b), filed September 26, 2008.

The petition is granted.

Petitioner has shown that the non-signing inventor, Stephen J. Brown, has expressly refused to join in the filing of the above-identified application.

The application and papers have been reviewed and found in compliance with 37 CFR 1.47(b). This application is hereby accorded Rule 1.47(b) status.

As provided in 37 CFR 1.47(c), this Office will forward notice of this application's filing to the non-signing inventor at the address given in the petition. Notice of the filing of this application will also be published in the Official Gazette.

This application is being referred to the Office of Patent Application Processing for further pre-examination processing.

Telephone inquiries should be directed to the undersigned at (571) 272-3230.

Shirene Willis Brantley
Senior Petitions Attorney
Office of Petitions

UNITED STATES PATENT AND TRADEMARK OFFICE

Commissioner for Patents
United States Patent and Trademark Office
P.O. Box 1450
Alexandria, VA 22313-1450
www.uspto.gov

STEPHEN J. BROWN
3324 WOODSIDE ROAD
WOODSIDE CA 94062

COPY MAILED

OCT 0 9 2008

OFFICE OF PETITIONS

In re Application of	:	
Brown	:	LETTER
Application No.: 12/117,114	:	
Filed: May 8, 2008	:	
Attorney Docket No.: 06-0617	:	

Dear Mr. Brown:

You are named as the sole inventor in the above-identified United States patent application, filed under the provisions of 35 U.S.C. 116 (United States Code), and 37 CFR 1.47(b), Rules of Practice in Patent Cases. Should a patent be granted on the application you will be designated therein as the sole inventor.

As a named inventor you are entitled to inspect any paper in the file wrapper of the application, order copies of all or any part thereof (at a prepaid cost per 37 CFR 1.19) or make your position of record in the application. Alternatively, you may arrange to do any of the preceding through a registered patent attorney or agent presenting written authorization from you. If you care to join the application, counsel of record (see below) would presumably assist you. Joining the application would entail the filing of an appropriate oath or declaration by you pursuant to 37 CFR 1.63.

Telephone inquiries regarding this communication should be directed to the undersigned at (571) 272-3230. Requests for information regarding your application should be directed to the File Information Unit at (703) 308-2733. Information regarding how to pay for and order a copy of the application, or a specific paper in the application, should be directed to the Certification Division at (571) 272-3150 or 1 (800) 972-6382 (outside the Washington, DC area).

Shirene Willis Brantley
Senior Petitions Attorney
Office of Petitions

ATTORNEYS OF RECORD: HEALTH HERO NETWORK, INC.
2400 GENG ROAD, SUITE 200
PALO ALTO CA 94303

UNITED STATES PATENT AND TRADEMARK OFFICE

Commissioner for Patents
United States Patent and Trademark Office
P.O. Box 1450
Alexandria, VA 22313-1450
www.uspto.gov

3M INNOVATIVE PROPERTIES COMPANY
PO BOX 33427
ST. PAUL, MN 55133-3427

MAILED

JUL 20 2009

OFFICE OF PETITIONS

In re Application of	:	
Janos Rohaly, et al.	:	
Application No. 12/117,116	:	DECISION GRANTING PETITION
Filed: May 8, 2008	:	UNDER 37 CFR 1.313(c)(2)
Attorney Docket No. 62695US008	:	

This is a decision on the renewed petition under 37 CFR 1.313(c)(2), filed July 17, 2009, to withdraw the above-identified application from issue after payment of the issue fee.

The petition is **GRANTED**.

The above-identified application is withdrawn from issue for consideration of a submission under 37 CFR 1.114 (request for continued examination). *See* 37 CFR 1.313(c)(2).

Petitioner is advised that the issue fee paid on July 10, 2009 cannot be refunded. If, however, this application is again allowed, petitioner may request that it be applied towards the issue fee required by the new Notice of Allowance.[1]

Telephone inquiries regarding this decision should be directed to undersigned at (571) 272-1642. All other inquiries concerning the examination or status of this application should be directed to the Technology Center.

This application is being referred to Technology Center AU 2873 for processing of the request for continued examination under 37 CFR 1.114 and for consideration of the concurrently filed information disclosure statement.

/AMW/
April M. Wise
Petitions Examiner
Office of Petitions

---

[1] *The request to apply the issue fee to the new Notice may be satisfied by completing and returning the new Part B – Fee(s) Transmittal Form (along with any balance due at the time of submission). Petitioner is advised that the Issue Fee Transmittal Form must be completed and timely submitted to avoid abandonment of the application.*

UNITED STATES PATENT AND TRADEMARK OFFICE

Commissioner for Patents
United States Patent and Trademark Office
P.O. Box 1450
Alexandria, VA 22313-1450
www.uspto.gov

PABST PATENT GROUP LLP
1545 PEACHTREE STREET NE
SUITE 320
ATLANTA GA 30309

COPY MAILED
DEC 15 2009
OFFICE OF PETITIONS

In re Application of	:	
Erik Jonas Jarvholm	:	DECISION ON PETITION
Application No. 12/117,129	:	TO WITHDRAW
Filed: May 8, 2008	:	FROM RECORD
Attorney Docket No. JARV 100	:	

This is a decision on the Request to Withdraw as attorney or agent of record under 37 C.F.R. § 1.36(b) filed October 19, 2009, which is being treated as a request to withdraw from employment in a proceeding before the Office under 37 C.F.R. § 10.40.

The request is **DISMISSED**.

A review of the file record indicates that Pabst Patent Group LLP does not have power of attorney in this patent application. Accordingly, the request to withdraw under 37 C.F.R. § 1.36(b) is not applicable.

The request to change the correspondence address of record is not accepted in view of Pabst Patent Group LLP not having power of attorney. See MPEP §§ 601.03 and 405.

Accordingly, all future communications from the Office will be directed solely to the above current address of record until proper instructions have been received.

Currently, there is no outstanding Office action that requires a reply.

Telephone inquires concerning this decision should be directed to the undersigned at 571-272-7751.

Joan Olszewski
Petitions Examiner
Office of Petitions

UNITED STATES PATENT AND TRADEMARK OFFICE

Commissioner for Patents
United States Patent and Trademark Office
P.O. Box 1450
Alexandria, VA 22313-1450
www.uspto.gov

BUHLER ASSOCIATES
BUHLER, KIRK A.
1101 CALIFORNIA AVE.
SUITE 208
CORONA CA 92881

MAILED

NOV 23 2009

OFFICE OF PETITIONS

In re Application of	:	
Rich O. **TRUCHINSKI**	:	
Application No. 12/117,156	:	DECISION ON PETITION
Filed: May 08, 2008	:	TO WITHDRAW
Attorney Docket No. RT01-02U	:	FROM RECORD
	:	

This is a decision on the Request to Withdraw as attorney or agent of record under 37 C.F.R. § 1.36(b), filed October 01, 2009.

The request is **APPROVED**.

A grantable request to withdraw as attorney/agent of record must be signed by every attorney/agent seeking to withdraw or contain a clear indication that one attorney is signing on behalf of another/others. The Office requires the practitioner(s) requesting withdrawal to certify that he, she, or they have: (1) given reasonable notice to the client, prior to the expiration of the response period, that the practitioner(s) intends to withdraw from employment; (2) delivered to the client or a duly authorized representative of the client all papers and property (including funds) to which the client is entitled; and (3) notified the client of any responses that may be due and the time frame within which the client must respond, pursuant 37 CFR 10.40(c).

The request was signed by Kirk Buhler on behalf of all attorneys of record who are associated with customer No. 37038. All attorneys/agents associated have been withdrawn. Applicant is reminded that there is no attorney of record at this time.

All future correspondence will be directed to the first named inventor Rich Truchinski at the address indicated below.

There are no outstanding office actions at this time.

Telephone inquiries concerning this decision should be directed to Michelle R. Eason at 571-272-4231.

Michelle R. Eason
Paralegal Specialist
Office of Petitions

cc: **RICH TRUCHINSKI**
16240 CLOVER ROAD
ADELANTO, CA 92301

UNITED STATES PATENT AND TRADEMARK OFFICE

Commissioner for Patents
United States Patent and Trademark Office
P.O. Box 1450
Alexandria, VA 22313-1450
www.uspto.gov

Paper No.

YOUNG & THOMPSON
209 Madison Street
Suite 500
ALEXANDRIA VA 22314

MAILED

JUN 01 2009

OFFICE OF PETITIONS

In re Application of :
Katsuyuki Okimura :
Application No. 12/117,158 : ON PETITION
Deposited: May 8, 2008 :
Attorney Docket No. 8017-1274 :

This is a decision on the "PETITION TO ACCORD FILING DATE UNDER 37 CFR §1.57(a)" filed July 23, 2008, requesting that the above-identified application be accorded a filing date of May 8, 2008.

For the reasons stated herein, the petition is **DISMISSED**.

Petitioner is given **TWO (2) MONTHS** from the mailing date of this decision to supply an amendment in compliance with §§ 1.57 and 1.121 or otherwise, properly respond. This period is not extendable. See 37 CFR 1.181(f). The reconsideration request should include a cover letter entitled "RENEWED PETITION UNDER 37 CFR 1.57(a)."

Application papers in the above-identified application were deposited via the Electronic Filing System, EFS-Web, on May 8, 2008. On May 28, 2008, the Office of Patent Application Processing mailed a "NOTICE OF INCOMPLETE NONPROVISIONAL APPLICATION" stating that the application had not been accorded a filing date because the application was deposited without a complete specification as prescribed by 35 U.S.C. 112 and without drawings as required by 35 U.S.C. 113.

In response, the present petition was timely filed. Petitioner submits a preliminary amendment directing entry into this application of the portions of the specification that were inadvertently omitted from the application as filed on May 8, 2008. Pursuant to 37 CFR 1.57(a), petitioner relies on a claim for priority of a prior-filed foreign application as a limited

incorporation of the inadvertently omitted material completely contained in the prior application. The petition includes a copy of the Japanese priority application and an English translation. Further, petitioner states where the inadvertently omitted portions of the specification appear in the priority application.

What is at issue is whether the application is entitled to a filing date of May 8, 2008, despite the omission of the specification on filing of the application on May 8, 2008. 37 CFR 1.57(a) is controlling. 37 CFR § 1.57 provides that:

> (a) Subject to the conditions and requirements of this paragraph, if all or a portion of the specification or drawing(s) is inadvertently omitted from an application, but the application contains a claim under § 1.55 for priority of a prior-filed foreign application, or a claim under § 1.78 for the benefit of a prior-filed provisional, nonprovisional, or international application, that was present on the filing date of the application, and the inadvertently omitted portion of the specification or drawing(s) is completely contained in the prior-filed application, the claim under § 1.55 or § 1.78 shall also be considered an incorporation by reference of the prior-filed application as to the inadvertently omitted portion of the specification or drawing(s).
>
> > (1) The application must be amended to include the inadvertently omitted portion of the specification or drawing(s) within any time period set by the Office, but in no case later than the close of prosecution as defined by § 1.114(b), or abandonment of the application, whichever occurs earlier. The applicant is also required to:
> >
> > (i) Supply a copy of the prior-filed application, except where the prior-filed application is an application filed under 35 U.S.C. 111;
> >
> > (ii) Supply an English language translation of any prior-filed application that is in a language other than English; and

> (iii) Identify where the inadvertently omitted portion of the specification or drawings can be found in the prior-filed application.
>
> ...
>
> (3) If an application is not otherwise entitled to a filing date under § 1.53(b), the amendment must be by way of a petition pursuant to this paragraph accompanied by the fee set forth in § 1.17(f).

The instant application was filed after September 21, 2004, and thus, the provisions of 37 CFR 1.57(a) are applicable. A review of the application confirms that on filing it included an application data sheet, containing a claim under § 1.55 for priority of prior-filed foreign application, JP 2007-130490. Petitioner states that the specification was inadvertently omitted on filing of this application.

Furthermore, petitioner states that the specification was inadvertently omitted. Petitioner submits a copy of the foreign application and English translation and requests entry of the specification. The petition includes the fee set forth in § 1.17(f).

However, the petition does not include a statement that the translation is accurate.

In view thereof, the petition is dismissed without prejudice to reconsideration upon the submission of a statement that the translation is accurate.

Further correspondence with respect to this decision should be addressed as follows:

By mail: Mail Stop Petition
Commissioner for Patents
P.O. Box 1450
Alexandria, VA 22313-1450

By FAX: (571) 273-8300
Attn: Office of Petitions
ATTN: NANCY JOHNSON

By hand: Customer Service Window
Randolph Building
401 Dulany Street
Alexandria, VA 22314

Registered users of EFS-Web may alternatively submit their response to this decision via EFS-Web.

Telephone inquiries related to this decision may be directed to Nancy Johnson, Senior Petitions Attorney at (571) 272-3219.

Anthony Knight
Supervisor
Office of Petitions

UNITED STATES PATENT AND TRADEMARK OFFICE

COMMISSIONER FOR PATENTS
UNITED STATES PATENT AND TRADEMARK OFFICE
P.O. BOX 1450
ALEXANDRIA, VA 22313-1450
www.uspto.gov

Paper No.

YOUNG & THOMPSON
209 Madison Street
Suite 500
ALEXANDRIA VA 22314

MAILED

OCT 27 2009

OFFICE OF PETITIONS

In re Application of	:	
Katsuyuki Okimura	:	
Application No. 12/117,158	:	ON PETITION
Deposited: May 8, 2008	:	
Attorney Docket No. 8017-1274	:	

This is a decision on the "RENEWED PETITION UNDER 37 CFR §1.57(a)" filed August 3, 2009, requesting that the above-identified application be accorded a filing date of May 8, 2008.

The petition is **GRANTED**.

Application papers in the above-identified application were deposited via the Electronic Filing System, EFS-Web, on May 8, 2008. On May 28, 2008, the Office of Patent Application Processing mailed a "NOTICE OF INCOMPLETE NONPROVISIONAL APPLICATION" stating that the application had not been accorded a filing date because the application was deposited without a complete specification as prescribed by 35 U.S.C. 112 and without drawings as required by 35 U.S.C. 113.

On July 23, 2008, applicants filed the initial petition. Pursuant to 37 CFR 1.57(a), petitioner relies on a claim for priority of a prior-filed foreign application as a limited incorporation of the inadvertently omitted material (specification and drawings) completely contained in the prior application. The petition included: a preliminary amendment directing entry into this application of the portions of the specification that were inadvertently omitted from the application as filed on May 8, 2008, a copy of the Japanese priority application and an English translation, and a statement as to where the inadvertently omitted portions of the specification appear in the priority application.

A review of the application confirmed that on filing it included an application data sheet, containing a claim under § 1.55 for priority of prior-filed foreign application, JP 2007-130490. The petition met the requirements of 37 CFR 1.57(a) except the petition did not include a statement that the English translation is accurate.

Accordingly, the petition was dismissed without prejudice to reconsideration upon the submission of a statement that the translation is accurate.

On instant renewed petition, attorney Patch has provided a statement that the English translation is accurate.

Applicants have now met all requirements of 37 CFR 1.57(a). Thus, pursuant to 1.57, the application as filed is considered to have incorporated by reference the prior-filed application as to the inadvertently omitted specification and drawings.

In view thereof, the petition is **GRANTED**.

The Office of Patent Application Processing has been advised of this decision. The application is thereby forwarded to the Office of Patent Application Processing **to accord a filing date of May 8, 2008**, including the specification and drawings supplied on July 23, 2008, and **for issuance of a corrected filing receipt**.

Telephone inquiries related to this decision may be directed to Nancy Johnson, Senior Petitions Attorney at (571) 272-3219.

Anthony Knight
Supervisor
Office of Petitions

UNITED STATES PATENT AND TRADEMARK OFFICE

Commissioner for Patents
United States Patent and Trademark Office
P.O. Box 1450
Alexandria, VA 22313-1450
www.uspto.gov

KNOBBE MARTENS OLSON & BEAR LLP
2040 MAIN STREET
FOURTEENTH FLOOR
IRVINE CA 92614

COPY MAILED

JUN 19 2008

In re Application of	:	
SCOCCIA, Adelmo A.	:	
Application No. 12/117,169	:	DECISION ON PETITION
Filed: March 06, 2008	:	TO MAKE SPECIAL UNDER
Attorney Docket No. **ASCO.001A**	:	37 CFR 1.102(c)(1)
	:	

This is a decision on the petition under 37 CFR 1.102(c)(1), May 08, 2008 to make the above-identified application special based on applicant's age as set forth in M.P.E.P. § 708.02, Section IV.

The petition is **GRANTED.**

A grantable petition to make an application special under 37 CFR 1.102(c)(1) and MPEP § 708.02, Section IV: Applicant's Age must be accompanied by evidence showing that at least one of the applicants is 65 years of age, or more, such as a birth certificate or a statement by applicant. No fee is required

The instant petition includes a copy of Adelmo A. Scoccia, driver's license attesting to his age. Accordingly, the above-identified application will be accorded "special" status.

Telephone inquiries concerning this decision should be directed to Tredelle Jackson at 571-272-2783.

All other inquiries concerning either the examination or status of the application should be directed to the Technology Center.

The application is being forwarded to the Technology Center Art Unit 3711 for action on the merits commensurate with this decision.

Tredelle D. Jackson
Paralegal Specialist
Office of Petitions

UNITED STATES PATENT AND TRADEMARK OFFICE

Commissioner for Patents
United States Patent and Trademark Office
P.O. Box 1450
Alexandria, VA 22313-1450
www.uspto.gov

ROBERT M. SCHWARTZ, P.A.
P.O. BOX 221470
HOLLYWOOD FL 33022

COPY MAILED
MAR 09 2010

In re Application of	:	
Jarret Morrow	:	DECISION ON PETITION
Application No. 12/117,170	:	TO WITHDRAW
Filed: May 8, 2008	:	FROM RECORD
Attorney Docket No. NO 672.016	:	

This is a decision on the request to withdraw as attorney of record under 37 C.F.R. § 1.36, filed December 31, 2009.

The request is **DISMISSED**.

A review of the file record indicates that Robert M. Schwartz, P.A. does not have power of attorney in this patent application. Accordingly, the request to withdraw under 37 C.F.R. § 1.36(b) is not applicable.

A review of USPTO records reveals that the Power of Attorney filed May 8, 2008 was erroneously accepted. Since no Statement under 37 CFR § 3.73(b) was attached the request was improper. In view of these facts the Power of Attorney must revert to the original Declaration filed May 8, 2008. The Declaration does not appoint a Power of Attorney.

Accordingly, all future communications from the Office will be directed solely to the above current address of record until proper instructions have been received.

Currently, there is an outstanding Office action mailed on September 14, 2009 that requires a response.

Telephone inquires concerning this decision should be directed to the undersigned at 571-272-7751.

Joan Olszewski
Petitions Examiner
Office of Petitions

UNITED STATES PATENT AND TRADEMARK OFFICE

Commissioner for Patents
United States Patent and Trademark Office
P.O. Box 1450
Alexandria, VA 22313-1450
www.uspto.gov

BERESKIN AND PARR
40 KING STREET WEST
BOX 401
TORONTO ON M5H 3Y2 CA CANADA

COPY MAILED
DEC 2 4 2008

In re Application of	:	
Winston Mok et al.	:	
Application No. 12/117,186	:	DECISION ON PETITION
Filed: May 8, 2008	:	UNDER 37 CFR 1.78(a)(6)
Attorney Docket No. 13210-826/KL	:	

This is a decision on the petition under 37 CFR 1.78(a)(6), filed October 8, 2008, to accept an unintentionally delayed claim under 35 U.S.C. §119(e) for the benefit of the prior-filed provisional application set forth in the concurrently filed amendment.

The petition is **GRANTED.**

A petition under 37 CFR 1.78(a)(6) is only applicable to those applications filed on or after November 29, 2000. Further, the petition is appropriate only after expiration of the period specified in 37 CFR 1.78(a)(5)(ii) and must be filed during the pendency of the nonprovisional application. In addition, the petition must be accompanied by:

(1) the reference required by 35 U.S.C. § 119(e) and 37 CFR 1.78(a)(5)(i) to the prior-filed application, unless previously submitted;
(2) the surcharge set forth in § 1.17(t); and
(3) a statement that the entire delay between the date the claim was due under 37 CFR 1.78(a)(5)(ii) and the date the claim was filed was unintentional. The Director may require additional information where there is a question whether the delay was unintentional.

Additionally, the instant nonprovisional application must be pending at the time of filing of the reference to the prior-filed provisional application as required by 37 CFR 1.78(a)(5)(ii). Further, the nonprovisional application claiming the benefit of the prior-filed provisional application must have been filed within twelve months of the filing date of the prior-filed provisional application.

All of the above requirements having been satisfied, the late claim for priority under 35 U.S.C. § 119(e) is accepted as being unintentionally delayed.

The granting of the petition to accept the delayed benefit claim to the prior-filed application under 37 CFR 1.78(a)(6) should not be construed as meaning that this application is entitled to the benefit of the filing date of the prior-filed application. In order for this application to be entitled to the benefit of the prior-filed application, all other requirements under 35 U.S.C. §119(e) and 37 CFR 1.78(a)(4) and (a)(5) must be met. Similarly, the fact that the corrected Filing Receipt accompanying this decision on petition includes the prior-filed application should not be construed as meaning that applicant is entitled to the claim for benefit of priority to the prior-filed application noted thereon. Accordingly, the examiner will, in due course, consider this benefit claim and determine whether the application is entitled to the benefit of the earlier filing date.

A corrected Filing Receipt, which includes the priority claim to the prior-filed provisional application, accompanies this decision on petition.

Any inquiries concerning this decision may be directed to Carl Friedman at (571) 272-6842. All other inquiries concerning either the examination procedures or status of the application should be directed to the Technology Center.

The application is being forwarded to Technology Center AU 2831 for consideration by the examiner of the claim under 35 U.S.C. §119(e) for the benefit of priority to the prior-filed provisional application.

Anthony Knight
Supervisor
Office of Petitions

ATTACHMENT: Corrected Filing Receipt

UNITED STATES PATENT AND TRADEMARK OFFICE

UNITED STATES DEPARTMENT OF COMMERCE
United States Patent and Trademark Office
Address: COMMISSIONER FOR PATENTS
P.O. Box 1450
Alexandria, Virginia 22313-1450
www.uspto.gov

APPLICATION NUMBER	FILING or 371(c) DATE	GRP ART UNIT	FIL FEE REC'D	ATTY.DOCKET.NO	TOT CLAIMS	IND CLAIMS
12/117,186	05/08/2008	2831	1030	13210-826/KL	13	1

CONFIRMATION NO. 8552

CORRECTED FILING RECEIPT

OC000000033772302

1059
BERESKIN AND PARR
40 KING STREET WEST
BOX 401
TORONTO, ON M5H 3Y2
CANADA

Date Mailed: 12/23/2008

Receipt is acknowledged of this non-provisional patent application. The application will be taken up for examination in due course. Applicant will be notified as to the results of the examination. Any correspondence concerning the application must include the following identification information: the U.S. APPLICATION NUMBER, FILING DATE, NAME OF APPLICANT, and TITLE OF INVENTION. Fees transmitted by check or draft are subject to collection. Please verify the accuracy of the data presented on this receipt. **If an error is noted on this Filing Receipt, please submit a written request for a Filing Receipt Correction. Please provide a copy of this Filing Receipt with the changes noted thereon. If you received a "Notice to File Missing Parts" for this application, please submit any corrections to this Filing Receipt with your reply to the Notice. When the USPTO processes the reply to the Notice, the USPTO will generate another Filing Receipt incorporating the requested corrections**

Applicant(s)

Winston MOK, Waterloo, CANADA;
Alexander KOCH, Waterloo, CANADA;
Arkady IVANNIKOV, Waterloo, CANADA;

Assignment For Published Patent Application

RESEARCH IN MOTION LIMITED, Waterloo, CANADA

Power of Attorney: None

Domestic Priority data as claimed by applicant

This application is a CON of 11/249,409 10/14/2005 PAT 7,388,160
which claims benefit of 60/693,092 06/23/2005

Foreign Applications

If Required, Foreign Filing License Granted: 05/21/2008

The country code and number of your priority application, to be used for filing abroad under the Paris Convention, is **US 12/117,186**

Projected Publication Date: Not Applicable

Non-Publication Request: No

Early Publication Request: No

Title

RADIO FREQUENCY ISOLATION CONTAINER

Preliminary Class

174

PROTECTING YOUR INVENTION OUTSIDE THE UNITED STATES

Since the rights granted by a U.S. patent extend only throughout the territory of the United States and have no effect in a foreign country, an inventor who wishes patent protection in another country must apply for a patent in a specific country or in regional patent offices. Applicants may wish to consider the filing of an international application under the Patent Cooperation Treaty (PCT). An international (PCT) application generally has the same effect as a regular national patent application in each PCT-member country. The PCT process **simplifies** the filing of patent applications on the same invention in member countries, but **does not result** in a grant of "an international patent" and does not eliminate the need of applicants to file additional documents and fees in countries where patent protection is desired.

Almost every country has its own patent law, and a person desiring a patent in a particular country must make an application for patent in that country in accordance with its particular laws. Since the laws of many countries differ in various respects from the patent law of the United States, applicants are advised to seek guidance from specific foreign countries to ensure that patent rights are not lost prematurely.

Applicants also are advised that in the case of inventions made in the United States, the Director of the USPTO must issue a license before applicants can apply for a patent in a foreign country. The filing of a U.S. patent application serves as a request for a foreign filing license. The application's filing receipt contains further information and guidance as to the status of applicant's license for foreign filing.

Applicants may wish to consult the USPTO booklet, "General Information Concerning Patents" (specifically, the section entitled "Treaties and Foreign Patents") for more information on timeframes and deadlines for filing foreign patent applications. The guide is available either by contacting the USPTO Contact Center at 800-786-9199, or it can be viewed on the USPTO website at http://www.uspto.gov/web/offices/pac/doc/general/index.html.

For information on preventing theft of your intellectual property (patents, trademarks and copyrights), you may wish to consult the U.S. Government website, http://www.stopfakes.gov. Part of a Department of Commerce initiative, this website includes self-help "toolkits" giving innovators guidance on how to protect intellectual property in specific countries such as China, Korea and Mexico. For questions regarding patent enforcement issues, applicants may call the U.S. Government hotline at 1-866-999-HALT (1-866-999-4158).

LICENSE FOR FOREIGN FILING UNDER

Title 35, United States Code, Section 184

Title 37, Code of Federal Regulations, 5.11 & 5.15

GRANTED

The applicant has been granted a license under 35 U.S.C. 184, if the phrase "IF REQUIRED, FOREIGN FILING LICENSE GRANTED" followed by a date appears on this form. Such licenses are issued in all applications where the conditions for issuance of a license have been met, regardless of whether or not a license may be required as

set forth in 37 CFR 5.15. The scope and limitations of this license are set forth in 37 CFR 5.15(a) unless an earlier license has been issued under 37 CFR 5.15(b). The license is subject to revocation upon written notification. The date indicated is the effective date of the license, unless an earlier license of similar scope has been granted under 37 CFR 5.13 or 5.14.

This license is to be retained by the licensee and may be used at any time on or after the effective date thereof unless it is revoked. This license is automatically transferred to any related applications(s) filed under 37 CFR 1.53(d). This license is not retroactive.

The grant of a license does not in any way lessen the responsibility of a licensee for the security of the subject matter as imposed by any Government contract or the provisions of existing laws relating to espionage and the national security or the export of technical data. Licensees should apprise themselves of current regulations especially with respect to certain countries, of other agencies, particularly the Office of Defense Trade Controls, Department of State (with respect to Arms, Munitions and Implements of War (22 CFR 121-128)); the Bureau of Industry and Security, Department of Commerce (15 CFR parts 730-774); the Office of Foreign AssetsControl, Department of Treasury (31 CFR Parts 500+) and the Department of Energy.

NOT GRANTED

No license under 35 U.S.C. 184 has been granted at this time, if the phrase "IF REQUIRED, FOREIGN FILING LICENSE GRANTED" DOES NOT appear on this form. Applicant may still petition for a license under 37 CFR 5.12, if a license is desired before the expiration of 6 months from the filing date of the application. If 6 months has lapsed from the filing date of this application and the licensee has not received any indication of a secrecy order under 35 U.S.C. 181, the licensee may foreign file the application pursuant to 37 CFR 5.15(b).

UNITED STATES PATENT AND TRADEMARK OFFICE

Commissioner for Patents
United States Patent and Trademark Office
P.O. Box 1450
Alexandria, VA 22313-1450
www.uspto.gov

SMITH HOPEN, PA
180 PINE AVENUE NORTH
OLDSMAR FL 34677

COPY MAILED

SEP 09 2008

OFFICE OF PETITIONS

In re Application of	:	
Robert J. Henning et al.	:	DECISION ON STATUS
Application No. 12/117,197	:	UNDER 37 CFR 1.47(a)
Filed: May 8, 2008	:	
Attorney Docket No. 1372.535.PRWOUS	:	

This is in response to the petition under 37 CFR 1.47(a), filed July 31, 2008.

The petition is DISMISSED.

Rule 47 applicant is given TWO MONTHS from the mailing date of this decision to reply, correcting the below-noted deficiencies. Any reply should be entitled "Request for Reconsideration of Petition Under 37 CFR 1.47(a)," and should only address the deficiencies noted below, except that the reply may include an oath or declaration executed by the non-signing inventor. **FAILURE TO RESPOND WILL RESULT IN ABANDONMENT OF THE APPLICATION.** Any extensions of time will be governed by 37 CFR 1.136(a).

A grantable petition under 37 CFR 1.47(a) requires: (1) proof that the non-signing inventor cannot be reached or refuses to sign the oath or declaration after having been presented with the application papers (specification, claims and drawings); (2) an acceptable oath or declaration in compliance with 35 U.S.C. §§ 115 and 116; (3) the petition fee; and (4) a statement of the last known address of the non-signing inventor. Applicant lacks item (1) set forth above.

As to item (1), the applicable statute (35 U.S.C.§ 116) requires that a "diligent effort" have been expended in attempting to find or reach the non-signing inventor. *See* MPEP 409.03(a). The showing currently fails to demonstrate, with a documented showing, that a diligent effort was made to find or locate non-signing inventor Robert J. Henning, such that the declaration can be accepted under 37 CFR 1.47(a). Where inability to find or locate a named inventor(s) is alleged, a statement of facts should be submitted that fully describes the exact facts which are relied on to establish that a *diligent effort* was made to locate the inventor.

Petitioner has not demonstrated that all efforts were expended in trying to locate the non-signing inventor Robert J. Henning. In this regard, petitioner should, at the very least, conduct a search of the regional or national registry(s). The results of such search should be made in any future petition for reconsideration. Additionally, petitioner should state whether he has access to inventor Henning's personnel records and, if so, what does inspection of the records reveal as to

a current address, forwarding address, or an address of the nearest living relative? What does inspection of the phone directories for those address locations reveal? The instant petition fails to document the steps taken to locate the whereabouts of the non-signing inventor. *See* MPEP 409.03(d).

Where there is an express or oral refusal, that fact, along with the time and place of the refusal, must be stated in an affidavit or declaration by the party to whom the refusal was made. Where there is a written refusal, a copy of the document(s) evidencing that refusal must be made part of the affidavit or declaration.

When it is concluded by the rule 47 applicant that an omitted inventor's conduct constitutes a refusal, all facts upon which that conclusion is based should be stated in an affidavit or declaration. If there is documentary evidence to support facts alleged in the affidavit or declaration, such evidence must be submitted.

Whenever an omitted inventor gives a reason for refusing to sign the application oath or declaration, that reason should be stated in the affidavit or declaration.

Further correspondence with respect to this matter should be addressed as follows:

By mail: Mail Stop PETITIONS
Commissioner for Patents
Post Office Box 1450
Alexandria, VA 22313-1450

By hand: Customer Service Window
Mail Stop Petitions
Randolph Building
401 Dulany Street
Alexandria, VA 22314

By fax: (571) 273-8300
ATTN: Office of Petitions

Telephone inquiries regarding this decision should be directed to Ramesh Krishnamurthy at (571) 272-4914.

David Bucci
Petitions Examiner
Office of Petitions

UNITED STATES PATENT AND TRADEMARK OFFICE

Commissioner for Patents
United States Patent and Trademark Office
P.O. Box 1450
Alexandria, VA 22313-1450
www.uspto.gov

SMITH HOPEN, PA
180 PINE AVENUE NORTH
OLDSMAR FL 34677

MAILED

FEB 13 2009

OFFICE OF PETITIONS

In re Application of	:	
Robert J. Henning et al.	:	DECISION ON STATUS
Application No. 12/117,197	:	UNDER 37 CFR 1.47(a)
Filed: May 8, 2008	:	
Attorney Docket No. 1372.535.PRWOUS	:	

This is in response to the renewed petition under 37 CFR 1.47(a), filed November 10, 2008.

The petition is **GRANTED.**

Petitioner has shown that the non-signing inventor cannot be found or reached after diligent effort to join in the filing of the above-identified application.

The application and papers have been reviewed and found in compliance with 37 CFR 1.47(a). This application is hereby accorded Rule 1.47(a) status.

As provided in 37 CFR 1.47(c), this Office will forward notice of this application's filing to the non-signing inventor at the address given in the petition. Notice of the filing of this application will also be published in the Official Gazette.

This application is being referred to the Office of Patent Application Processing for further processing.

Telephone inquiries regarding this decision should be directed to Ramesh Krishnamurthy at (571) 272-4914.

Anthony Knight
Supervisor
Office of Petitions

UNITED STATES PATENT AND TRADEMARK OFFICE

Commissioner for Patents
United States Patent and Trademark Office
P.O. Box 1450
Alexandria, VA 22313-1450
www.uspto.gov

Dr. Robert J. Henning,
James A Haley Veteran's Hospital,
13000 Bruce B, Downs Blvd. (VAR 1-107),
Tampa, FL 33612.

MAILED

FEB 13 2009

OFFICE OF PETITIONS

In re Application of
Robert J. Henning and Paul R. Sanberg
Application No. 12/117,197
Filed: May 8, 2008
For: METHOD OF STEM CELL THERAPY FOR CARDIOVASCULAR REPAIR

Dear Dr. Henning:

You are named as a joint inventor in the above-identified United States patent application, filed under the provisions of 35 U.S.C. 116 (United States Code), and 37 CFR 1.47(a), Rules of Practice in Patent Cases. Should a patent be granted on the application you will be designated therein as a joint inventor.

As a named inventor you are entitled to inspect any paper in the file wrapper of the application, order copies of all or any part thereof (at a prepaid cost per 37 CFR 1.19) or make your position of record in the application. Alternatively, you may arrange to do any of the preceding through a registered patent attorney or agent presenting written authorization from you. If you care to join the application, counsel of record (see below) would presumably assist you. Joining the application would entail the filing of an appropriate oath or declaration by you pursuant to 37 CFR 1.63.

Telephone inquiries regarding this communication should be directed to Ramesh Krishnamurthy at (571) 272 - 4914. Requests for information regarding your application should be directed to the File Information Unit at (703) 308-2733. Information regarding how to pay for and order a copy of the application, or a specific paper in the application, should be directed to the Certification Division at (571) 272-3150 or 1 (800) 972-6382 (outside the Washington, DC area).

Anthony Knight
Supervisor
Office of Petitions

cc: THOMAS E. TONER
SMITH & HOPEN
180 PINE AVENUE NORTH
OLDSMAR, FL 34677

UNITED STATES PATENT AND TRADEMARK OFFICE

Commissioner for Patents
United States Patent and Trademark Office
P.O. Box 1450
Alexandria, VA 22313-1450
www.uspto.gov

GLAXOSMITHKLINE
CORPORATE INTELLECTUAL PROPERTY - UW2220
P.O. BOX 1539
KING OF PRUSSIA PA 19406-0939

COPY MAILED
DEC 1 2 2008

In re Application of
Gerald Voss
Application No. 12/117,205
Filed: May 8, 2008
Attorney Docket No. B45209C1D1

: DECISION GRANTING
: PETITION

This is a decision on the filing date petition filed July 8, 2008 under 37 CFR 1.57, which is being construed as a petitionunder 37 CFR 1.182.

The petition is **GRANTED**.

The application was filed on May 8, 2008. However, on May 29, 2008 the Office of Data Management mailed a Notice of Incomplete Application stating that the application had not been filed with a specification and thus, the application could not be accorded a filing date.

In response, the present petition was filed. Petitioner acknowledges that the specification was inadvertently omitted but argues that the instant application, upon filing, properly claimed priority to U.S. Non-Provisional Application 11/119,212, which was filed April 29, 2005. With the petition was filed a specification, claims, drawings and abstract.

As a part of the originally filed disclosure, a preliminary amendment was also filed on May 8, 2008. This amendment contained a claim for priority and expressly incorporated by reference U.S. Patent Application No. 11/119,212 which petitioner submits is the same disclosure as the present application. Petitioner's statement is accepted and as such, the present application contained an application upon filing. Thus, reliance upon 37 CFR 1.57 is unnecessary.

A petition fee of $400 has been charged to petitioner's deposit account in accordance with 37 CFR 1.182 and 1.17(f).

The primary examiner is expected to compare the specification, claims , drawings and abstract supplied on July 8, 2008, to the disclosure of U.S. Non-provisional application no. 11/119,212 in order to verify that they were in fact, a part of the disclosure of the parent application.

The application is being forwarded to the Office of Patent Application Processing for correction of the filing date to May 8, 2008, using the application papers filed May 8, 2008 and those submitted July 8, 2008 as a part of the original disclosure.

Telephone inquiries concerning this matter should be directed to Senior Petitions Attorney Patricia Faison-Ball at (571) 272-3212.

Anthony Knight
Supervisor
Office of Petitions

UNITED STATES PATENT AND TRADEMARK OFFICE

UNITED STATES DEPARTMENT OF COMMERCE
United States Patent and Trademark Office
Address: COMMISSIONER FOR PATENTS
P.O. Box 1450
Alexandria, Virginia 22313-1450
www.uspto.gov

APPLICATION NO.	FILING DATE	FIRST NAMED INVENTOR	ATTORNEY DOCKET NO.	CONFIRMATION NO.
12/117,246	05/08/2008	Richard H. Harris	RPS920070188US2	8676

59369 7590 05/28/2008
CANTOR COLBURN LLP - IBM RESEARCH TRIANGLE PARK
20 Church Street
22nd Floor
Hartford, CT 06103

EXAMINER
FUREMAN, JARED

ART UNIT	PAPER NUMBER
2876	

MAIL DATE	DELIVERY MODE
05/28/2008	PAPER

Please find below and/or attached an Office communication concerning this application or proceeding.

The time period for reply, if any, is set in the attached communication.

UNITED STATES PATENT AND TRADEMARK OFFICE

Commissioner for Patents
United States Patent and Trademark Office
P.O. Box 1450
Alexandria, VA 22313-1450
www.uspto.gov

CANTOR COLBURN LLP - IBM RESEARCH TRIANGLE PARK
20 Church Street, 22nd Floor
Hartford, CT 06103

In re Application of: HARRIS *et al.* Serial No.: 12/117,246 Filed: May 08, 2008 Docket: **RPS920070188US2** Title: **COMBINED MAGNETIC SHIELD MEMBER AND PRESSURE PAD FOR A MAGNETIC READER**	DECISION ON PETITION TO MAKE SPECIAL FOR NEW APPLICATION UNDER 37 C.F.R. § 1.102 & M.P.E.P. § 708.02

This is a decision on the petition filed on May 08, 2008, to make the above-identified application special for accelerated examination procedure under 37 C.F.R. § 1.102(d).

The petition to make the application special is GRANTED.

The application is eligible for accelerated examination and the petition complies with the conditions for granting the application special status pursuant to the "Change to Practice for Petitions in Patent Applications to Make Special and for Accelerated Examination" published June 26, 2006, in the Federal Register. (71 Fed. Reg. 36323).

The prosecution of the instant application will be conducted expeditiously according to the following guidelines.

1. The application will be docketed to an examiner and taken up for action within two weeks of the date of this decision.

2. Restriction Practice:
   If the examiner determines that the claims are not directed to a single invention, a telephone request to elect one single invention will be made pursuant to MPEP 812.01. As a prerequisite to the grant of this petition, the applicant has agreed to make an oral election, by telephone, without traverse. If the applicant refuses to make an election without traverse, or the examiner cannot reach the applicant after a reasonable effort, the examiner will treat the first claimed invention (invention defined by claim 1) as having being constructively elected without traverse for examination.

3. Office action:
   If it is determined that, after appropriate consultation, there is a potential rejection or any other issue to be addressed, the examiner will telephone the applicant and arrange an interview to discuss and resolve the issue. An Office action, other than a Notice of Allowance and Fee(s) Due (Notice of Allowance), will not be issued unless either: 1) an interview was conducted but did not result in agreed to action that places the application in condition for allowance, or, 2) a determination is made that an interview would be unlikely to result in the application being placed in condition for allowance, and 3) an internal conference has been held to review any rejection of any claim.

4. Time for Reply:
   An Office action other than a Notice of Allowance or a final Office action will set a shortened statutory period of one month or thirty days, whichever is longer, for reply with no extension of time available under 37 CFR 1.136(a). Failure to timely file a reply within this non-extendible period for reply will result in the abandonment of the application.

5. Reply by Applicant:
   A timely reply to an Office action other than the Notice of Allowance must be submitted electronically via EFS or EFS-web and limited to addressing the rejections, objections and requirement made. Any amendment that attempts to: 1) add claims which would result in more than three pending independent claims or more than twenty pending total claims; 2) present claims not encompassed by the pre-examination search or an updated accelerated examination support document; or 3) present claims that are directed a non-elected invention or an invention other than that previously claimed and examined in the application, will be treated as not fully responsive and will not be entered.

   For any amendment to the claims (including any new claim) that is not encompassed by the accelerated examination support document, applicant must provide an updated accelerated examination support document that encompasses the amended or new claims at the time of filing of the amendment.

   To proceed expeditiously with the examination, it is recommended that a reply with amendments made to any claim or with any new claim being added be accompanied by an updated accelerated examination support document or a statement explaining how the amended or new claim is supported by the original accelerated examination support document.

6. Information Disclosure Statement (IDS):
   Any IDS filed during prosecution must be submitted electronically via EFS or EFS-web, accompanied by an updated accelerated examination support document, and be in compliance with 37 CFR 1.97 and 1.98.

7. Post-Allowance Processing:
   To expedite processing of the allowed application into a patent, the applicant must: 1) pay the required fees within one month of the date of the Notice of Allowance, and 2) not file any post allowance papers not required by the Office. In no event may the issue fee be paid and accepted later than three months from the date of the Notice of Allowance.

8. After-Final and Appeal Procedures:
   To expedite prosecution, after receiving the final Office action, applicant must: 1) promptly file a notice of appeal, an appeal brief and appeal fees; and 2) not request a pre-appeal brief conference.

   Any amendment, affidavit or other evidence filed after final Office action must comply with applicable rules and the requirements outlined in numbered paragraphs 5 and 6 above.

   On appeal, the application will proceed according to normal appeal procedures. After appeal, the application will again be treated special.

9. Proceedings Outside the Normal Examination Process:
   If the application becomes involved in a proceeding that is outside the normal examination process (e.g., a secrecy order, national security review, interference proceeding, petitions under 37 CFR 1.181, 182 or 183), the application will be treated special before and after such proceeding.

10. Final Disposition:
    The twelve month goal of this accelerated examination procedure ends with a final disposition. The mailing of a final Office action, a Notice of Allowance, the filing of a Notice of Appeal, or the filing of a Request for Continued Examination (RCE) is the final disposition.

If, during prosecution, a paper is not filed electronically using EFS-web, a reply is filed but is not fully responsive, the application is involved in an appeal, or a proceeding outside normal examination process, the application will still be examined expeditiously, however, the final disposition may occur more than twelve months from the filing of the application.

Any inquiry regarding this decision should be directed to the undersigned at (571) 272-1594.

Clayton E. LaBalle

Clayton E. LaBalle, T-QAS
Technology Center 2800 - Semiconductors,
Electrical & Optical Systems & Components

UNITED STATES PATENT AND TRADEMARK OFFICE

Commissioner for Patents
United States Patent and Trademark Office
P.O. Box 1450
Alexandria, VA 22313-1450
www.uspto.gov

FULBRIGHT & JAWORSKI, LLP
600 CONGRESS AVENUE
SUITE 2400
AUSTIN, TX 78701

COPY MAILED
JAN 19 2010

In re Application of Bruce L. Phillips, et al. Application No. 12/117,291 Filed: May 8, 2008 Attorney Docket No. FIR.600D1	: : : : :	DECISION ON PETITION

This is a decision on the petition, filed October 20, 2009, which is being treated as a petition under 37 CFR 1.181 (no fee) requesting withdrawal of the holding of abandonment in the above-identified application.

The petition is **GRANTED**.

This application was held abandoned for failure to reply to the non-final Office action mailed April 20, 2009, which set a three (3) month shortened statutory period for reply. A Notice of Abandonment was mailed on October 14, 2009.

Petitioner asserts that the Office action dated April 20, 2009 was not received.

A review of the written record indicates no irregularity in the mailing of the Office action, and, in the absence of any irregularity, there is a strong presumption that the Office action was properly mailed to the practitioner at the address of record. This presumption may be overcome by a showing that the Office action was not in fact received. In this regard, the showing required to establish the failure to receive the Office action must consist of the following:

1. a statement from practitioner stating that the Office action was not received by the practitioner;

2. a statement from the practitioner attesting to the fact that a search of the file jacket and docket records indicates that the Office action was not received; and

3. a copy of the docket record where the nonreceived Office action would have been entered had it been received and docketed must be attached to and referenced in the practitioner's statement.

See MPEP § 711.03(c) under subheading "Petition to Withdraw Holding of Abandonment Based on Failure to Receive Office Action," and "Withdrawing the Holding of Abandonment When Office Actions Are Not Received," 1156 Official Gazette 53 (November 16, 1993).

The petition satisfies the above-stated requirements. Accordingly, the application was not abandoned in fact.

In view of the above, the Notice of Abandonment is hereby **vacated** and the holding of abandonment **withdrawn**.

This application is being referred to the Technology Center technical support staff of Art Unit 3673 for re-mailing the Office action of April 7, 2009. The period for reply will run from the mailing date of the Office action.

/dab/
David Bucci
Petition Examiner
Office of Petitions

UNITED STATES PATENT AND TRADEMARK OFFICE

UNITED STATES DEPARTMENT OF COMMERCE
United States Patent and Trademark Office
Address: COMMISSIONER FOR PATENTS
P.O. Box 1450
Alexandria, Virginia 22313-1450
www.uspto.gov

PVF -- SUN MICROSYSTEMS INC.
C/O PARK, VAUGHAN & FLEMING LLP
2820 FIFTH STREET
DAVIS, CA 95618-7759

Mail Date: 04/21/2010

Applicant	: Arthur R. Zingher	: DECISION ON REQUEST FOR
Patent Number	: 7612459	: RECALCULATION of PATENT
Issue Date	: 11/03/2009	: TERM ADJUSTMENT IN VIEW
Appliction No	: 12/117,408	: OF WYETH AND NOTICE OF INTENT TO
Filed	: 05/08/2008	: ISSUE CERTIFICATE OF CORRECTION
		:

The Request for Recalculation is **GRANTED** to the extent indicated.

The patent term adjustment has been determined to be **0** days. The USPTO will *sua sponte* issue a certificate of correction reflecting the amount of PTA days determined by the recalculation.

Prior to the issuance of the certificate of correction, the USPTO will afford patentee an opportunity to be heard and request reconsideration. Accordingly, patentee has **one month or thirty (30) days**, whichever is longer, to file a request for reconsideration of this patent term adjustment calculation. See 35 U.S.C. 154(b)(3)(B)(ii) and 37 CFR 1.322(a)(4). No extensions of time will be granted under 37 CFR 1.136.

Patentee should use document code PET.OP if electronically filing a request for reconsideration of this patent term adjustment calculation. The patentee must also include the information required by 37 CFR 1.705(b)(2) and the fee required by 37 CFR 1.18(e). If patentee does not file a timely request for reconsideration of this patent term adjustment calculation including the information required by 37 CFR 1.705(b)(2) and the fee required by 37 CFR 1.18(e), the USPTO will issue a certificate of correction reflecting the PTA determination noted above.

Patentee should be aware that in order to preserve the right to review in the United States District Court for the District of Columbia of the USPTO patent term adjustment determination, patentee must ensure that he or she also take the steps required under 35 U.S.C. 154(b)(4)(A) in a timely manner. Nothing in the request for recalculation should be construed as providing an alternative time frame for commencing a civil action under 35 U.S.C. 154(b)(4)(A).

Any questions concerning this decision should be directed to the Office of Patent Legal Administration at 571-272-7702.

Johnson, Rochaun

From: Tapolcai, William
Sent: Tuesday, January 26, 2010 9:35 AM
To: Johnson, Rochaun; Tyler, Cheryl
Subject: SPE's Response for IFW docs (3) (2) (2) (3) (3) (2) (4) (2) (3) (2) (2) (6) (2) (2)

Paper No.: _____

DATE : 01/26/10

TO SPE OF : ART UNIT 3744

SUBJECT : Request for Certificate of Correction for Appl. No 12/117413.: 7631514

Please respond to this request for a certificate of correction within 7 days.

FOR IFW FILES:

Please review the requested changes/corrections as shown in the **COCIN** document(s) in the IFW application image. No new matter should be introduced, nor should the scope or meaning of the claims be changed.

Please complete the response (see below) and forward the completed response to scanning using document code **COCX**.

FOR PAPER FILES:

Please review the requested changes/corrections as shown in the attached certificate of correction. Please complete this form (see below) and forward it with the file to:

Certificates of Correction Branch (CofC)

Should the change(s) _____ **Be made?**

RoChaun Johnson

Certificates of Correction Branch

571 272-0470

Thank You For Your Assistance

The request for issuing the above-identified correction(s) is hereby:
Note your decision on the appropriate box.

xApproved — **All** changes apply.

☐ **Approved in Part** — Specify below which changes **do not** apply.

☐ **Denied** — State the reasons for denial below.

Comments:

UNITED STATES PATENT AND TRADEMARK OFFICE

Commissioner for Patents
United States Patent and Trademark Office
P.O. Box 1450
Alexandria, VA 22313-1450
www.uspto.gov

OSHA, LIANG LLP / SMITH
TWO HOUSTON CENTER
909 FANNIN STREET, SUITE 3500
HOUSTON TX 77010

MAILED

JUN 02 2010

OFFICE OF PETITIONS

In re Application of :
Lee :
Application No. 12/117,583 :
Filed: May 8, 2008 :
Attorney Docket No. 05516/333002 :

ON PETITION

This decision is mailed in response to the petition under 37 CFR 1.181, filed March 31, 2010, requesting withdrawal of the holding of abandonment in the above-identified application.

The petition under 37 CFR 1.181 is **DISMISSED**.

Any request for reconsideration of this decision must be submitted within TWO (2) MONTHS from the mail date of this decision. Extensions of time under 37 CFR 1.136(a) are permitted. This is **not** final agency action within the meaning of 5 U.S.C. § 704.

This application became abandoned for failure to timely respond to the Notice of Allowability, mailed December 3, 2009, which set a non-extendable three (3) month period for reply. Accordingly, this application became abandoned on March 4, 2010. A Notice of Abandonment was mailed on March 22, 2010.

Petitioner asserts the application did not become abandoned because applicant filed corrected drawings on November 13, 2009, after an examiner interview during which the examiner discussed, *inter alia*, the need for replacement drawings. A Notice of Allowability, which required applicant to submit corrected drawings, was mailed on December 3, 2009. Petitioner alleges that on December 22, 2009, the examiner returned a phone call by applicant's representative and indicated that the drawings filed on November 13, 2009 were approved. There is no evidence of the December 22, 2009 conversation in the image file wrapper. Petitioner argues the application is not abandoned because the December 3, 2009 Notice of Allowability was mailed in error, as corrected drawings had already been filed on November 13, 2009.

Petitioner is reminded that the December 3, 2009 Notice of Allowability set a three month non-extendable period for reply. The Notice of Allowability was never withdrawn. Failure to timely reply resulted in the abandonment of the application. Even if an applicant believes an Office

action is mailed in error or lacks merit, failure to respond *in some formal manner* by the deadline set in the Office action will result in the application's abandonment.

The petition under 37 CFR 1.181 to withdraw the holding of abandonment is **dismissed**.

Given the facts and circumstances surrounding the abandonment, petitioner is encouraged to file a petition to revive under the unavoidable delay provisions of 37 CFR 1.137(a).

Further correspondence with respect to this matter should be addressed as follows:

By mail:
Mail Stop PETITION
Commissioner for Patents
Post Office Box 1450
Alexandria, VA 22313-1450

By hand:
U.S. Patent and Trademark Office
Customer Service Window, Mail Stop Petition
Randolph Building
401 Dulany Street
Alexandria, VA 22314

By FAX:
(571) 273-8300 - ATTN: Office of Petitions

By internet:
EFS-Web
www.uspto.gov/ebc/efs_help.html
(for help using EFS-Web call the
Patent Electronic Business Center
at (866) 217-9197)

Telephone inquiries may be directed to the undersigned at (571) 272-3230.

Shirene Willis Brantley
Shirene Willis Brantley
Senior Petitions Attorney
Office of Petitions

UNITED STATES PATENT AND TRADEMARK OFFICE

Commissioner for Patents
United States Patent and Trademark Office
P.O. Box 1450
Alexandria, VA 22313-1450
www.uspto.gov

COPY MAILED

SEP 30 2009

OFFICE OF PETITIONS

JENNINGS, STROUSS & SALMON, P.L.C.
201 E. WASHINGTON ST., 11TH FLOOR
PHOENIX AZ 85004

In re Application of	:	
Pamela Fetters	:	
Application No. 12/117,587	:	DECISION ON PETITION
Filed: May 8, 2008	:	TO WITHDRAW
Attorney Docket No. **58740-2**	:	FROM RECORD

This is a decision on the Request to Withdraw as attorney or agent of record under 37 CFR § 1.36(b), filed September 14, 2009.

The request is **NOT APPROVED**.

A grantable request to withdraw as attorney/agent of record must be signed by every attorney/agent seeking to withdraw or contain a clear indication that one attorney is signing on behalf of another/others.

The request cannot be approved because the attorney cannot withdraw attorneys' individually when the power of attorney was originally granted by Customer Number in the Power of Attorney filed May 8, 2008.

All future communications from the Office will continue to be directed to the above-listed address until otherwise notified by applicant.

Telephone inquiries concerning this decision should be directed to JoAnne Burke at 571-272-4584.

JoAnne Burke
Petitions Examiner
Office of Petitions

UNITED STATES PATENT AND TRADEMARK OFFICE

Commissioner for Patents
United States Patent and Trademark Office
P.O. Box 1450
Alexandria, VA 22313-1450
www.uspto.gov

JENNINGS, STROUSS & SALMON, P.L.C.
201 E. WASHINGTON ST., 11TH FLOOR
PHOENIX AZ 85004

MAILED

NOV 18 2009

OFFICE OF PETITIONS

In re Application of
Pamela Fetters
Application No. 12/117,587
Filed: May 8, 2008
Attorney Docket No. **58740-2**

DECISION ON PETITION
TO WITHDRAW
FROM RECORD

This is a decision on the renewed Request to Withdraw as attorney or agent of record under 37 CFR § 1.36(b), filed September 14, 2009.

The request is **APPROVED**.

A grantable request to withdraw as attorney/agent of record must be signed by every attorney/agent seeking to withdraw or contain a clear indication that one attorney is signing on behalf of another/others. The Office requires the practitioner(s) requesting withdrawal to certify that he, she, or they have: (1) given reasonable notice to the client, prior to the expiration of the response period, that the practitioner(s) intends to withdraw from employment; (2) delivered to the client or a duly authorized representative of the client all papers and property (including funds) to which the client is entitled; and (3) notified the client of any responses that may be due and the time frame within which the client must respond , pursuant to 37 CFR 10.40(c).

The request was signed by Paul B. Heynssens on behalf of all attorneys of record who are associated with Customer No. 39978.

All attorneys/agents associated with the Customer No. 39978 have been withdrawn.

Applicant is reminded that there is no attorney of record at this time.

All future correspondence will be directed to the first named inventor Pamela Fetters at the address list listed in the request.

There is an outstanding Office action mailed July 21, 2009, that requires a reply from the applicant.

Telephone inquiries concerning this decision should be directed to the undersigned at 571-272-4584.

JoAnne Burke
Petitions Examiner
Office of Petitions

cc: Pamela Fetters
16429 N. 35th Street
Phoenix, AZ 85032

UNITED STATES PATENT AND TRADEMARK OFFICE

UNITED STATES DEPARTMENT OF COMMERCE
United States Patent and Trademark Office
Address: COMMISSIONER FOR PATENTS
P.O. Box 1450
Alexandria, Virginia 22313-1450
www.uspto.gov

APPLICATION NUMBER	FILING OR 371(C) DATE	FIRST NAMED APPLICANT	ATTY. DOCKET NO./TITLE
12/117,587	05/08/2008	Pamela Fetters	58740-2

CONFIRMATION NO. 9334

POWER OF ATTORNEY NOTICE

39978
JENNINGS, STROUSS & SALMON, P.L.C.
201 E. WASHINGTON ST., 11TH FLOOR
PHOENIX, AZ 85004

OC000000038803654

Date Mailed: 11/17/2009

NOTICE REGARDING CHANGE OF POWER OF ATTORNEY

This is in response to the Power of Attorney filed 10/15/2009.

- The withdrawal as attorney in this application has been accepted. Future correspondence will be mailed to the new address of record. 37 CFR 1.33.

/jlburke/

Office of Data Management, Application Assistance Unit (571) 272-4000, or (571) 272-4200, or 1-888-786-0101

UNITED STATES PATENT AND TRADEMARK OFFICE

Commissioner for Patents
United States Patent and Trademark Office
P.O. Box 1450
Alexandria, VA 22313-1450
www.uspto.gov

SHAY GLENN LLP
2755 CAMPUS DRIVE
SUITE 210
SAN MATEO, CA 94403

COPY MAILED

MAR 1 7 2009

OFFICE OF PETITIONS

In re Application of	:	
Marshall L. Sherman, et al.	:	
Application No. 12/117,596	:	DECISION ON PETITION
Filed: May 8, 2008	:	TO WITHDRAW
Attorney Docket No. 10228-707.200/AFI-010	:	FROM RECORD
	:	

This is a decision on the Request to Withdraw as attorney or agent of record under 37 C.F.R. § 1.36(b), filed February 17, 2009.

The request is **NOT APPROVED**.

A grantable request to withdraw as attorney/agent of record must be signed by every attorney/agent seeking to withdraw or contain a clear indication that one attorney is signing on behalf of another/others.

The request cannot be approved because the statement under 3.73(b) is not proper or no statement under 3.73(b) was filed.

In order to request or take action in a patent matter, the assignee must establish its ownership of the patent to the satisfaction of the Director. In this regard, a Statement under 37 CFR 3.73(b) must have either: (i) documentary evidence of a chain of title from the original owner to the assignee (*e.g.*, copy of an executed assignment), and a statement affirming that the documentary evidence of the chain of title from the original owner to the assignee was or concurrently is being submitted for recordation pursuant to § 3.11; or (ii) a statement specifying where documentary evidence of a chain of title from the original owner to the assignee is recorded in the assignment records of the Office (*e.g.*, reel and frame number).

All future communications from the Office will continue to be directed to the above-listed address until otherwise notified by applicant.

Telephone inquiries concerning this decision should be directed to undersigned 571-272-1642. All other inquiries concerning the examination or status of this application should be directed to the Technology Center.

/AMW/
April M. Wise
Petitions Examiner
Office of Petitions

cc: MEDTRONIC, INC.
710 MEDTRONIC PARKWAY, NE
MINNEAPOLIS, MN 55432-9924

UNITED STATES PATENT AND TRADEMARK OFFICE

Commissioner for Patents
United States Patent and Trademark Office
P.O. Box 1450
Alexandria, VA 22313-1450
www.uspto.gov

**TOWNSEND AND TOWNSEND
AND CREW, LLP
TWO EMBARCADERO CENTER
EIGHTH FLOOR
SAN FRANCISCO, CA 94111-3834**

COPY MAILED

JUN 16 2009

OFFICE OF PETITIONS

In re Application of	:	
Richard NUCCITELLI, et al	:	
Application No. 12/117,598	:	DECISION ON PETITION
Filed: May 8, 2008	:	TO WITHDRAW
Attorney Docket No. 026955-000400US	:	FROM RECORD
	:	

This is a decision on the Request to Withdraw as attorney or agent of record under 37 C.F.R. § 1.36(b), filed May 5, 2009.

The request is **NOT APPROVED** as moot.

A review of the file record indicates that the power of attorney to Townsend and Townsend and Crew LLP, has been revoked by the assignee of the patent application on May 26, 2009. Accordingly, the request to withdraw under 37 C.F.R. § 1.36(b) is moot.

Telephone inquires concerning this decision should be directed to undersigned at 571-272- 6735.

Diane Goodwyn
Petitions Examiner
Office of Petitions

cc: LEVINE BAGADE HAN LLP
2400 GENG ROAD, SUITE 120
PALO ALTO, CA 94303

UNITED STATES PATENT AND TRADEMARK OFFICE

COMMISSIONER FOR PATENTS
UNITED STATES PATENT AND TRADEMARK OFFICE
P.O. BOX 1450
ALEXANDRIA, VA 22313-1450
www.uspto.gov

KNOBBE MARTENS OLSON & BEAR LLP
2040 MAIN STREET
FOURTEENTH FLOOR
IRVINE CA 92614

MAILED

APR 24 2009

OFFICE OF PETITIONS

Applicant: Ragnarsdottir, et al.
Appl. No.: 12/117,633
Filing: May 8, 2008
Title: SYSTEM AND METHOD FOR MOTION-CONTROLLED FOOT UNIT
Attorney Docket No.: OSSUR.053A2DV1
Pub. No.: US 2008/0215161 A1
Pub. Date: September 4, 2008

This is a decision on the request for a corrected patent application publication under 37 CFR 1.221(b), received on October 29, 2008, for the above-identified application

The request is DISMISSED.

Applicant requests that the application be republished because the patent application publication contains a material error on the front page of the application wherein the inventor's name Arinbjorn V. Clausen is misprinted as Arinbjorn V. Calusen.

37 CFR 1.221 (b) is applicable "only when the Office makes a material mistake which is apparent from Office records.... Any request for a corrected publication or revised patent application publication other than provided as provided in paragraph (a) of this section must be filed within two months from the date of the patent application publication. This period is not extendable." A material mistake must affect the public's ability to appreciate the technical disclosure of the patent application publication, to determine the scope of the patent application publication, or to determine the scope of the provisional rights that an applicant may seek to enforce upon issuance of a patent. [1]

The typographical error in the second inventor's name may be an Office error, but it is not a material Office error under 37 CFR 1.221. The error does not affect the understanding of the application. The mistakes do not affect the public's ability to appreciate the technical disclosure of the patent application publication, or determine the scope of the patent application publication or determine the scope of the provisional rights that an applicant may seek to enforce upon issuance of a patent.

[1] Changes to Implement Eighteen-Month Publication of Patent Applications, 65 FR 57023, 57038 (Sept. 20, 2000), 1239, Off. Gaz. Pat. Office Notices 63, 75 (Oct. 10, 2000) (final rule).

On May 28, 2008, a Filing Receipt was mailed by the Office, which improperly listed the inventor's name as Arinbjorn V. Calusen. To avoid this type of problem in the future, applicant's representative should make request a corrected filing receipt prior to publication of the application.

The applicant is advised that a "request for republication of an application previously published" may be filed under 37 CFR 1.221(a). Such a request for republication "must include a copy of the application compliance with the Office's electronic filing system requirements and be accompanied by the publication fee set forth in § 1.18(d) and the processing fee set forth in § 1.17(i)." If the request for republication does not comply with the electronic filing system requirements, the republication will not take place and the publication fee set forth in § 1.18(d) will be refunded. The processing fee will be retained.

A guide for filing a request for a Pre-Grant Publication, such as a request for republication may be found on the link below:

http://www.uspto.gov/ebc/portal/tutorials.htm

Any request for republication under 37 CFR 1.221(a), must be submitted via the EFS system, as a "Pre-Grant Publication" and questions or request for reconsideration of the decision, should be addressed as follows:

By mail to: Mail Stop PGPUB
Commissioner for Patents
P.O. Box 1450
Alexandria, Va. 22313-1450

Inquiries relating to this matter may be directed to Mark Polutta at (571) 272-7709.

Mark Polutta
Senior Legal Advisor
Office of Patent Legal Administration
Office of the Deputy Commissioner
for Patent Examination Policy

UNITED STATES PATENT AND TRADEMARK OFFICE

Commissioner for Patents
United States Patent and Trademark Office
P.O. Box 1450
Alexandria, VA 22313-1450
www.uspto.gov

IPSOLON, LLP (JRD)
111 SW COLUMBIA ST.
SUITE 710
PORTLAND OR 97201

MAILED

FEB 19 2009

OFFICE OF PETITIONS

In re Application of
Michael Prstojevich
Application No.12/117,643
Filed: May 8, 2008
Attorney Docket No. 1381-018/JRD

DECISION ON PETITION

This is a decision on the petition under the unintentional provisions of 37 CFR 1.137(b), filed January 15, 2009, to revive the above-identified application.

The petition is **GRANTED**.

The petition satisfies the conditions for revival pursuant to the provisions of 37 CFR 1.137(b) in that (1) the reply in the form of an executed declaration and required fees; (2) the petition fee; and (3) the required statement of unintentional delay have been received. Accordingly, the reply to the Notice mailed May 23, 2008, is accepted as having been unintentionally delayed.

Telephone inquiries concerning this decision should be directed to the undersigned at (571) 272-3208.

This application is being referred to the Office of Patent Application Processing for pre-examination processing.

Karen Creasy

Karen Creasy
Petitions Examiner
Office of Petitions

UNITED STATES PATENT AND TRADEMARK OFFICE

Commissioner for Patents
United States Patent and Trademark Office
P.O. Box 1450
Alexandria, VA 22313-1450
www.uspto.gov

Rutler Law PLLC
One Union Square
600 University Street
Suite 1919
Seattle, WA 98101

COPY MAILED

MAR 0 2 2009

OFFICE OF PETITIONS

In re Application of	:	
Andrew Deal	:	
Application No. 12/117,663	:	DECISION ON PETITION
Filed: May 8, 2008	:	TO WITHDRAW
Attorney Docket No. CAST-1001-1	:	FROM RECORD
	:	

This is a decision on the Request to Withdraw as attorney or agent of record under 37 C.F.R. § 1.36(b), filed February 3, 2009.

The request is **APPROVED**.

A grantable request to withdraw as attorney/agent of record must be signed by every attorney/agent seeking to withdraw or contain a clear indication that one attorney is signing on behalf of another/others. A request to withdraw will not be approved unless at least 30 (thirty) days would remain between the date of approval and the later of the expiration date of a time to file a response or the expiration date of the maximum time period which can be extended under 37 C.F.R. § 1.136(a).

The request was signed by James J. Ruttler on behalf of all attorneys/agents associated with customer number 59520. All attorneys/agents associated with customer number 59520 have been withdrawn.

Applicant is reminded that there is no attorney of record at this time.

All future correspondence will be mailed to the address of the first signing inventor.

Telephone inquiries concerning this decision should be directed to Kimberly Inabinet at 571-272-4618.

Kimberly Inabinet
Kimberly Inabinet
Petitions Examiner
Office of Petitions

cc: Andrew Deal
8600 E. Mill Plain Boulevard
Suite E
Vancouver, WA 98664-2055

UNITED STATES PATENT AND TRADEMARK OFFICE

UNITED STATES DEPARTMENT OF COMMERCE
United States Patent and Trademark Office
Address: COMMISSIONER FOR PATENTS
P.O. Box 1450
Alexandria, Virginia 22313-1450
www.uspto.gov

APPLICATION NUMBER	FILING OR 371(C) DATE	FIRST NAMED APPLICANT	ATTY. DOCKET NO./TITLE
12/117,663	05/08/2008	Andrew Deal	CAST-1-1001-1

CONFIRMATION NO. 9456

POWER OF ATTORNEY NOTICE

OC000000034786970

59520
Ruttler Law PLLC
One Union Square
600 University Street
Suite 1919
Seattle, WA 98101

Date Mailed: 02/27/2009

NOTICE REGARDING CHANGE OF POWER OF ATTORNEY

This is in response to the Power of Attorney filed 02/03/2009.

- The withdrawal as attorney in this application has been accepted. Future correspondence will be mailed to the new address of record. 37 CFR 1.33.

/kainabinet/

Office of Data Management, Application Assistance Unit (571) 272-4000, or (571) 272-4200, or 1-888-786-0101

UNITED STATES PATENT AND TRADEMARK OFFICE

Commissioner for Patents
United States Patent and Trademark Office
P.O. Box 1450
Alexandria, VA 22313-1450
www.uspto.gov

FOLEY & LARDNER LLP
P.O. BOX 80278
SAN DIEGO, CA 92138-0278

COPY MAILED

JUL 02 2009

OFFICE OF PETITIONS

In re Application of
Alf Friman et al.
Application No. 12/117,669
Filed: May 8, 2008
Attorney Docket No. ETRNS.030A

DECISION ON PETITION
TO WITHDRAW
FROM RECORD

This is a decision on the Request to Withdraw as attorney or agent of record under 37 CFR. § 1.36(b), filed February 25, 2009.

The request is **NOT APPROVED** as moot.

A review of the file record indicates that the power of attorney to attorneys/agents associated with Customer Number 30542 has been revoked by the assignee of the patent application on February 18, 2009. Accordingly, the request to withdraw under 37 C.F.R. § 1.36(b) is moot.

All future communications from the Office will continue to be directed to the below-listed address until otherwise notified by applicant.

Telephone inquires concerning this decision should be directed to JoAnne Burke at 571-272- 4584.

Ramesh Krishnamurthy

Ramesh Krishnamurthy
Petitions Examiner
Office of Petitions

cc: Coastal Patent, LLC
P.O.BOX 232340
San Diego CA 92193

UNITED STATES PATENT AND TRADEMARK OFFICE

COMMISSIONER FOR PATENTS
UNITED STATES PATENT AND TRADEMARK OFFICE
P.O. BOX 1450
ALEXANDRIA, VA 22313-1450
WWW.USPTO.GOV

Paper No.

SJM/AFD-WILEY
14901 DEVEAU PLACE
MINNETONKA MN 55345-2126

COPY MAILED

JAN 05 2009

OFFICE OF PETITIONS

In re Application of Michael C. Bednarek, Ravisankar Gurusamy, Hans Schnellmann, and Todd Stangenes Application No. 12/117,675 Filed: May 8, 2008 Attorney Docket No. 0B-049802US/82410-0272 Title: TRANSSEPTAL PUNCTURE NEEDLE AND NEEDLE ASSEMBLIES	DECISION ON PETITION PURSUANT TO 37 C.F.R. § 1.47(A)

This is in response to the petition pursuant to 37 C.F.R. § 1.47(a), filed on November 12, 2008.

This petition is **DISMISSED**.

On May 8, 2008, the application was filed, identifying Michael C. Bednarek, Ravisankar Gurusamy, John D. Ockuly, Hans Schnellmann, James A. Hassett, Todd Stangenes, Brian Schmidt, and Xuan Khieu as joint inventors. No oath or declaration was included on filing. On May 21, 2008, a "Notice to File Missing Parts of Nonprovisional Application - Filing Date Granted" (notice) was mailed, requiring, *inter alia*, a fully executed oath or declaration and the surcharge associated with the late submission of the same. The notice set a two-month period for response.

On November 12, 2008, Petitioner submitted this petition in response to the notice, along with, *inter alia*, a declaration that has been executed[1] by Michael C. Bednarek, Ravisankar

1 Pursuant to 37 C.F.R. § 1.48(f), "[I]f the correct inventor or inventors are not named on filing a nonprovisional application under § 1.53(b) without an executed oath or declaration under § 1.63 by any of the inventors, the first submission of an executed oath or declaration under § 1.63 by any of the

Gurusamy, and Todd Stangenes, along with, *inter alia*, the fee that is associated with the late submission of an oath or declaration, the petition fee, a four-month extension of time so as to make timely the response,[2] the last-known address of non-signing inventor Schnellmann, a statement of facts, a copy of a letter, a FedEx tracking report, and a copy of an e-mail from the non-signing inventor's former employer.

A grantable petition pursuant to 37 C.F.R. § 1.47(a) requires:

(1) the petition fee of $200;
(2) a surcharge of either $65 or $130 if the petition is not filed at the time of filing the application, as set forth in 37 C.F.R. § 1.16(f);
(3) a statement of the last known address of the non-signing inventors;
(4) either
  a) proof that a copy of the entire application (specification, claims, drawings, and the oath or declaration) was sent or given to the non-signing inventor for review and proof that the non-signing inventor refuses to join in the application or
  b) proof that the non-signing inventor cannot be found or reached after diligent effort, and;
(5) a declaration which complies with 37 C.F.R. § 1.63.

Petitioner has met requirements (1) - (3) of 37 C.F.R. § 1.47(a).

<u>Regarding the fourth requirement of 37 C.F.R. § 1.47(a)</u>, Petitioner has not submitted adequate proof that diligent efforts have been made to locate the non-signing inventor. Petitioner has set forth that the non-signing joint inventor "could not be found after diligent effort,"[3] and as such, Petitioner is required to establish that a diligent effort was made to locate the non-signing inventor. However the petition is silent as to any search that might have been performed for Mr. Schnellmann. There is no indication that the Rule 47 applicant attempted to verify the address of the non-signing inventor or to determine his forwarding address, and to send <u>the complete application</u>

---

inventors during the pendency of the application will act to correct the earlier identification of inventorship."
2 It is noted that November 11, 2008 fell on a federal holiday.
3 Petition, page 2.

papers to that address for consideration by the inventor.[4] Petitioner must provide a showing detailing the attempts that were made to obtain a forwarding address or to locate the non-signing inventor by means such as through E-mail, telephone, and the Internet. If this search is sufficiently broad so as to provide a reasonable opportunity to locate this individual, and it is then averred that such attempts failed, then Petitioner will have provided the necessary proof required under 37 C.F.R. § 1.47 that the non-signing inventor cannot be reached. Details of the efforts to locate the non-signing inventor are to be set forth in an affidavit or declaration of facts by a person having first hand knowledge of the details.

Regarding the fifth requirement of 37 C.F.R. § 1.47(a), the declaration that was submitted concurrently with this petition cannot be accepted for two reasons.

First, this declaration fails to comply with 37 C.F.R. § 1.63, as it contains non-initialed and non-dated changes by joint inventor Gurusamy.[5]

Secondly, it is unclear whether the declaration complies with 37 C.F.R. § 1.63(a)(2), as it cannot be determined if the declaration correctly sets forth the name of the non-signing inventor. The declaration lists the non-signing inventor as "Hans Schnellmann." However, Petitioner has included an e-mail that is dated October 20, 2008, and was sent from Mr. Martens, the Commercial Director of the non-signing inventor's former employer, to Phoung-Quan Hoang, an attorney with St. Jude Medical, the purported Assignee. In this e-mail, Mr. Martens informed the recipient that the "correct name" of the non-singing inventor is "Johann Schnellmann." As such, it appears that the declaration does not contain the correct name of the non-singing inventor.

If Mr. Martens' assertion is not correct, this must be set forth on renewed petition by one having firsthand knowledge of this fact. Moreover, Petitioner must provide a statement from Mr. Martens explaining that he is mistaken regarding Mr. Schnellmann's correct name.

If Mr. Martens' assertion is correct, Petitioner must file a new declaration, along with petitions pursuant to 37 C.F.R. § 1.182 to change the name of the inventor and 37 C.F.R. § 1.183, seeking the waiver of the requirement that a statement from the non-signing inventor be provided. Petitioner will note that a supplemental Application Data Sheet (ADS) cannot be used to make

---

4 See MPEP § 409.03(d).
5 See 37 C.F.R. § 1.52(c)(1) and MPEP § 605.04(a).

this correction.[6]

If reconsideration of this decision is desired, any response to this decision must be submitted within **TWO MONTHS** from the mail date of this decision. Extensions of time under 37 C.F.R. § 1.136(a) are permitted. The reply should include a cover letter entitled "Renewed Petition pursuant to 37 C.F.R. § 1.47(a)". This is not a final agency action within the meaning of 5 U.S.C § 704.

Petitioner should note that any statement that appears therein should be made by one having firsthand knowledge of the event. Statements based on hearsay are not normally accepted.

Alternatively, on renewed petition, if Petitioner can accurately assert that Mr. Schnellmann has refused to sign the declaration, no additional action need be taken in regards to this matter other than for Petitioner to provide the Office with this statement, since it is clear that a complete copy of the application was sent to the last known address of the non-signing inventor.[7]

Any response to this decision should indicate in a prominent manner that the attorney handling this matter is Paul Shanoski, and may be submitted by mail,[8] hand-delivery,[9] or facsimile.[10] Registered users of EFS-Web may alternatively submit a response to this decision via EFS-Web.[11]

If responding by mail, Petitioner is advised not to place the undersigned's name on the envelope. Only the information that appears in the footnote should be included - adding anything else to the address will delay the delivery of the response to the undersigned.

It is noted that the address listed on the petition differs from the address of record. The application file does not indicate a change of correspondence address has been filed in this case, although the address given on the petition differs from the address of record. If Petitioner desires to receive future

---

6 See 37 C.F.R. §§ 1.76(d)(1) and (3).
7 If this assertion is made on renewed petition, Petitioner should include a reference to the seventh paragraph of Ms. Twomey's declaration of facts that sets forth that a complete copy of the application was sent to the last known address of the non-signing inventor.
8 Mail Stop Petition, Commissioner for Patents, United States Patent and Trademark Office, P.O. Box 1450, Alexandria, VA, 22313-1450.
9 Customer Window, Randolph Building, 401 Dulaney Street, Alexandria, VA, 22314.
10 (571) 273-8300- please note this is a central facsimile number.
11 https://sportal.uspto.gov/authenticate/authenticateuserlocalepf.html

correspondence regarding this application, the change of correspondence address must be submitted. A courtesy copy of this decision will be mailed to Petitioner. However, all future correspondence will be directed to the address of record until such time as appropriate instructions are received to the contrary. Petitioner will not receive future correspondence related to this application unless Change of Correspondence Address, Patent Form (PTO/SB/122) is submitted for the above-identified application. For Petitioner's convenience, a blank Change of Correspondence Address, Patent Form (PTO/SB/122), may be found at http://www.uspto.gov/web/forms/sb0122.pdf.

Telephone inquiries regarding this decision should be directed to the undersigned at (571) 272-3225.[12]

/Paul Shanoski/
Paul Shanoski
Senior Attorney
Office of Petitions

cc: Wiley Rein LLP
Attn: Patent Administration
1776 K Street, N.W.
Washington, DC 20006

12 Petitioner will note that all practice before the Office should be in writing, and the action of the Office will be based exclusively on the written record in the Office. See 37 C.F.R. § 1.2. As such, Petitioner is reminded that no telephone discussion may be controlling or considered authority for any of Petitioner's further action(s).

UNITED STATES PATENT AND TRADEMARK OFFICE

Commissioner for Patents
United States Patent and Trademark Office
P.O. Box 1450
Alexandria, VA 22313-1450
www.uspto.gov

RONALD W. BONOFIGLIO, JR
110 CHARDONNAY LANE
TOLLAND, CT 06084

MAILED

MAY 14 2010

OFFICE OF PETITIONS

In re Application of
Ronald W. Bonofiglio, Jr.
Application No. 12/117,722
Filed: May 8, 2008
Attorney Docket No.

ON PETITION

This is in response to the communication, filed March 22, 2010, to revive the above-identified application, which is being treated as a petition to withdraw the holding of abandonment.

The petition is **DISMISSED**.

On October 13, 2009, the Office mailed a Notice of Non-Compliant Amendment (Notice), which set a one (1) month or thirty (30) day shortened statutory period to reply. The application became abandoned on November 14, 2009, for failure to submit a timely response to the Notice. On February 19, 2010, the Office mailed a Notice of Abandonment.

In the present petition, petitioner requests that the Office withdraw the holding of abandonment due to applicant error in filing a complete response to the Notice mailed October 13, 2009.

DISCUSSION OF PETITION TO WITHDRAW THE HOLDING OF ABANDONMENT

A review of the record indicates that the petitioner did attempt to file a reply to the Notice on October 19, 2009, which included the transmittal letter which was unintentionally left blank as explained by petitioner. Further, the amendment was not signed.

Since a proper response to the Notice of Non-Compliant Amendment was not timely received, the application was properly abandoned.

ALTERNATIVE VENUE

Petitioner is strongly encouraged to consider filing a petition under 37 CFR 1.137(b) to revive an unintentionally abandoned application instead of filing a renewed petition under 37 CFR 1.181 or a petition under 37 CFR 1.137(a).

A grantable petition pursuant to 37 CFR 1.137(b) must be accompanied by:

(1) The reply required to the outstanding Office action or notice, unless previously filed. In nonprovisional utility application abandoned for failure to respond to a non-final Office action, the required reply may be met by filing either (A) an argument or amendment under 37 CFR 1.111 or (B) a continuing application under 37 CFR 1.53(b).

(2) The petition fee as set forth in 37 CFR 1.17(m), **$810.00 for a small entity**;

(3) A statement that the entire delay in filing the required reply from the due date for the reply until the filing of a grantable petition was unintentional. The Director may require additional information where there is a question whether the delay was unintentional.

A form for filing a petition to revive an unintentionally abandoned application accompanies this decision for petitioner's convenience. If petitioner desires to file a petition under 37 CFR 1.137(b) instead of filing a request for reconsideration, petitioner must complete the enclosed petition form (PTO/SB/64) and pay the $810.00 petition fee.

Petitioner may wish to consider hiring a registered patent attorney or agent to assist in the prosecution of this application. Additionally, petitioner is encouraged to contact the Inventors Assistance Center (IAC) by telephone at 800-786-9199 or 571-272-1000, Monday through Friday from 8:30 AM to 5:30 PM (EST). The IAC provides patent information and services to the public and is staffed by former Supervisory Patent Examiners and experienced Primary Examiners who answer general questions concerning patent examining policy and procedure.

Any request for reconsideration of this decision should be submitted within **TWO (2) MONTH** from the mail date of this decision and be entitled "Renewed Petition to Withdraw the Holding of Abandonment under 37 CFR 1.181." *See* 37 CFR 1.181(f).

Further correspondence with respect to this matter should be addressed as follows:

By mail: Mail Stop Petition
Commissioner for Patents
P.O. Box 1450
Alexandria, VA 22313-1450

By FAX: (571) 273-8300
Attn: Office of Petitions

By hand: Customer Service Window
Randolph Building
401 Dulany Street
Alexandria, VA 22314

Telephone inquiries related to this decision may be directed to the April M. Wise at (571) 272-1642.

/Carl Friedman/
Carl Friedman
Petitions Examiner
Office of Petitions

Enclosures: Petition For Revival Of An Application For Patent Abandoned Unintentionally Under 37 CFR 1.137(b); Form PTO/SB/64, Privacy Act Statement.

UNITED STATES PATENT AND TRADEMARK OFFICE

Commissioner for Patents
United States Patent and Trademark Office
P.O. Box 1450
Alexandria, VA 22313-1450
www.uspto.gov

MICROSOFT CORPORATION
ONE MICROSOFT WAY
REDMOND WA 98052

COPY MAILED

MAR 11 2009

OFFICE OF PETITIONS

In re Application of
Hang Li
Application No. 12/117,740
Filed: May 9, 2005
Attorney Docket No. 322782.01

DECISION ON PETITION

This is a decision on the petition under the unintentional provisions of 37 CFR 1.137(b), filed February 10, 2009, to revive the above-identified application.

The petition is **GRANTED**.

The petition satisfies the conditions for revival pursuant to the provisions of 37 CFR 1.137(b) in that (1) the reply in the form of an substitute specification; (2) the petition fee; and (3) the required statement of unintentional delay have been received. Accordingly, the reply to the notice mailed May 22, 2008, is accepted as having been unintentionally delayed.

The file does not indicate a change of address has been submitted, although the address given on the petition differs from the address of record. If appropriate, a change of address should be filed in accordance with MPEP 601.03. A courtesy copy of this decision is being mailed to the address given on the petition; however, the Office will mail all future correspondence solely to the address of record.

Telephone inquiries concerning this decision should be directed to the undersigned at (571) 272-3208.

This application is being referred to the Office of Patent Application Processing for pre-examination processing.

Karen Creasy

Karen Creasy
Petitions Examiner
Office of Petitions

cc:

JOSEPH R. KELLY
900 SECOND AVENUE SOUTH, SUITE 1400
MINNEAPOLIS, MINNESOTA 55402-3319

UNITED STATES PATENT AND TRADEMARK OFFICE

UNITED STATES DEPARTMENT OF COMMERCE
United States Patent and Trademark Office
Address: COMMISSIONER FOR PATENTS
P.O. Box 1450
Alexandria, Virginia 22313-1450
www.uspto.gov

APPLICATION NO.	FILING DATE	FIRST NAMED INVENTOR	ATTORNEY DOCKET NO.	CONFIRMATION NO.
12/117,816	05/09/2008	Michael John BARRETT-LENNARD	AU920080015US1 - 163-252	9750

49267 7590 08/13/2008
KEUSEY, TUTUNJIAN & BITETTO, P.C.
20 CROSSWAYS PARK NORTH, SUITE 210
WOODBURY, NY 11797

EXAMINER
ALAM, HOSAIN T

ART UNIT	PAPER NUMBER
2166	

MAIL DATE	DELIVERY MODE
08/13/2008	PAPER

Please find below and/or attached an Office communication concerning this application or proceeding.

The time period for reply, if any, is set in the attached communication.

UNITED STATES PATENT AND TRADEMARK OFFICE

Commissioner for Patents
United States Patent and Trademark Office
P.O. Box 1450
Alexandria, VA 22313-1450
www.uspto.gov

Gaspare J. Randazzo
Keusey, Tutunjian and Bitetto, PC
20 Crossways Park North, Suite 210
Woodbury, Ny 11797

In re Application of: Michael BARRETT-LENNARD Serial No.: 12/117,816 Filed: May 09, 2008 Attorney Docket: AU920080015US1 Title: METHOD, SYSTEM, AND COMPUTER PROGRAM PRODUCT FOR IMPROVED ROUND ROBIN FOR TIME SERIES DATA	DECISION ON PETITION TO MAKE SPECIAL FOR NEW APPLICATION UNDER 37 C.F.R. § 1.102 & M.P.E.P. § 708.02

This is a decision on the petition filed on May 09, 2008 to make the above-identified application special for accelerated examination procedure under 37 C.F.R. § 1.102(d).

The petition to make the application special is **GRANTED**.

The application is eligible for accelerated examination and the petition complies with the conditions for granting the application special status pursuant to the "Change to Practice for Petitions in Patent Applications to Make Special and for Accelerated Examination" published June 26, 2006, in the Federal Register. (71 Fed. Reg. 36323).

The prosecution of the instant application will be conducted expeditiously according to the following guidelines.

1. The application will be docketed to an examiner and taken up for action within two weeks of the date of this decision.

2. Restriction Practice:
   If the examiner determines that the claims are not directed to a single invention, a telephone request to elect one single invention will be made pursuant to MPEP 812.01. As a prerequisite to the grant of this petition, the applicant has agreed to make an oral election, by telephone, without traverse. If the applicant refuses to make an election without traverse, or the examiner cannot reach the applicant after a reasonable effort, the examiner will treat the first claimed invention (invention defined by claim 1) as having being constructively elected without traverse for examination.

3. Office action:
   If it is determined that, after appropriate consultation, there is a potential rejection or any other issue to be addressed, the examiner will telephone the applicant and arrange an interview to discuss and resolve the issue. An Office action, other than a Notice of Allowance and Fee(s) Due (Notice of Allowance), will not be issued unless either: 1) an interview was conducted but did not result in agreed to action that places the application in condition for allowance, or, 2) a determination is made that an interview would be unlikely to result in the application being placed in condition for allowance, and 3) an internal conference has been held to review any rejection of any claim.

4. Time for Reply:
   An Office action other than a Notice of Allowance or a final Office action will set a shortened statutory period of one month or thirty days, whichever is longer, for reply with no extension of time available under 37 CFR 1.136(a). Failure to timely file a reply within this non-extendible period for reply will result in the abandonment of the application.

5. Reply by Applicant:
   A timely reply to an Office action other than the Notice of Allowance must be submitted electronically via EFS or EFS-web and limited to addressing the rejections, objections and requirement made. Any amendment that attempts to: 1) add claims which would result in more than three pending independent claims or more than twenty pending total claims; 2) present claims not encompassed by the pre-examination search or an updated accelerated examination support document; or 3) present claims that are directed a non-elected invention or an invention other than that previously claimed and examined in the application, will be treated as not fully responsive and will not be entered.

   For any amendment to the claims (including any new claim) that is not encompassed by the accelerated examination support document, applicant must provide an updated accelerated examination support document that encompasses the amended or new claims at the time of filing of the amendment.

   To proceed expeditiously with the examination, it is recommended that a reply with amendments made to any claim or with any new claim being added be accompanied by an updated accelerated examination support document or a statement explaining how the amended or new claim is supported by the original accelerated examination support document.

6. Information Disclosure Statement (IDS):
   Any IDS filed during prosecution must be submitted electronically via EFS or EFS-web, accompanied by an updated accelerated examination support document, and be in compliance with 37 CFR 1.97 and 1.98.

7. Post-Allowance Processing:
   To expedite processing of the allowed application into a patent, the applicant must: 1) pay the required fees within one month of the date of the Notice of Allowance, and 2) not file any post allowance papers not required by the Office. In no event may the issue fee be paid and accepted later than three months from the date of the Notice of Allowance.

8. After-Final and Appeal Procedures:
   To expedite prosecution, after receiving the final Office action, applicant must: 1) promptly file a notice of appeal, an appeal brief and appeal fees; and 2) not request a pre-appeal brief conference.

   Any amendment, affidavit or other evidence filed after final Office action must comply with applicable rules and the requirements outlined in numbered paragraphs 5 and 6 above.

   On appeal, the application will proceed according to normal appeal procedures. After appeal, the application will again be treated special.

9. Proceedings Outside the Normal Examination Process:
   If the application becomes involved in a proceeding that is outside the normal examination process (e.g., a secrecy order, national security review, interference proceeding, petitions under 37 CFR 1.181, 182 or 183), the application will be treated special before and after such proceeding.

10. Final Disposition:
    The twelve month goal of this accelerated examination procedure ends with a final disposition. The mailing of a final Office action, a Notice of Allowance, the filing of a Notice of Appeal, or the filing of a Request for Continued Examination (RCE) is the final disposition.

If, during prosecution, a paper is not filed electronically using EFS-web, a reply is filed but is not fully responsive, the application is involved in an appeal, or a proceeding outside normal examination process, the application will still be examined expeditiously, however, the final disposition may occur more than twelve months from the filing of the application.

Any inquiry concerning this decision should be directed to the undersigned whose telephone number is (571) 272-3613.

Vincent N. Trans, SPRE/QAS
Technology Center 2100
Computer Architecture, Software, and
Information Security

UNITED STATES PATENT AND TRADEMARK OFFICE

Commissioner for Patents
United States Patent and Trademark Office
P.O. Box 1450
Alexandria, VA 22313-1450
www.uspto.gov

STANDLEY LAW GROUP LLP
6300 RIVERSIDE DRIVE
DUBLIN OH 43017

COPY MAILED

NOV 1 6 2009

OFFICE OF PETITIONS

In re Application of	:	
Schwarzberg et al.	:	
Application No. 12/117,820	:	ON PETITION
Filed: May 9, 2008	:	
Attorney Docket No. SEN 2234-008A	:	

This is a notice regarding your request for acceptance of a fee deficiency submission under 37 CFR 1.28. On September 1, 1998, the Court of Appeals for the Federal Circuit held that 37 CFR 1.28(c) is the sole provision governing the time for correction of the erroneous payment of the issue fee as a small entity. **See DH Technology v. Synergystex International, Inc. 154 F.3d 1333, 47 USPQ2d 1865 (Fed. Cir. Sept. 1, 1998).**

The Office no longer investigates or rejects original or reissue applications under 37 CFR 1.56. **1098 Off. Gaz. Pat. Office 502 (January 3, 1989)**. Therefore, nothing in this Notice is intended to imply that an investigation was done.

Your fee deficiency submission under 37 CFR 1.28 is hereby **ACCEPTED**.

This application is no longer entitled to small entity status. Accordingly, all future fees paid in this application must be paid at the large entity rate.

Telephone inquiries concerning this decision should be directed to Joan Olszewski at (571) 272-7751.

/Liana Walsh/
Liana Walsh
Petitions Examiner
Office of Petitions

UNITED STATES PATENT AND TRADEMARK OFFICE

UNITED STATES DEPARTMENT OF COMMERCE
United States Patent and Trademark Office
Address: COMMISSIONER FOR PATENTS
P.O. Box 1450
Alexandria, Virginia 22313-1450
www.uspto.gov

APPLICATION NO.	FILING DATE	FIRST NAMED INVENTOR	ATTORNEY DOCKET NO.	CONFIRMATION NO.
12/117,889	05/09/2008	Seiji SAKAI	326262US2	9909

7590 08/17/2009
OBLON, SPIVAK, MCCLELLAND MAIER & NEUSTADT, L.L.P.
1940 DUKE STREET
ALEXANDRIA, VA 22314

EXAMINER
CROWE, DAVID R

ART UNIT	PAPER NUMBER
2885	

NOTIFICATION DATE	DELIVERY MODE
08/17/2009	ELECTRONIC

DECISION GRANTING PETITION UNDER 37 CFR 1.138(d)

The declaration of express abandonment is recognized

This is in response to the petition under 37 CFR 1.138(d), requesting for a refund of any previously paid search fee and excess claims fee in the above-identified application.

The petition is granted.

The express abandonment is recognized. Any previously paid search fee and excess claims fee are hereby refunded.

Telephone inquiries should be directed to the Office of Data Management at (571) 272-4200.

Patent Publication Branch
Office of Data Management

Adjustment date: 08/14/2009 BPOWELL
05/09/2008 INTEFSW 00006325 12117889
02 FC:1111 -510.00 OP

Adjustment date: 08/14/2009 BPOWELL
05/09/2008 INTEFSW 00006325 12117889
02 FC:1111 -510.00 OP

FORM PET651G (Rev. 08/07)

UNITED STATES PATENT AND TRADEMARK OFFICE

Commissioner for Patents
United States Patent and Trademark Office
P.O. Box 1450
Alexandria, VA 22313-1450
www.uspto.gov

MCANDREWS HELD & MALLOY, LTD
500 WEST MADISON STREET
SUITE 3400
CHICAGO IL 60661

8/26/09

In re Application of:
BATENBURG, GREG et al
Serial No. 12/117,930
Filed: May 9, 2008
Docket: 19587US01
Title: SYSTEM AND METHOD FOR DELIVERING A PRESSURIZED GAS FROM A CRYOGENIC STORAGE VESSEL

DECISION ON REQUEST TO PARTICIPATE IN PATENT PROSECUTION HIGHWAY PILOT PROGRAM AND PETITION TO MAKE SPECIAL UNDER 37 CFR 1.102(d)

This is a decision on the request to participate in the Patent Prosecution Highway (PPH) pilot program and the petition under 37 CFR 1.102(d), filed August 24, 2009 to make the above-identified application special. The required petition fee under 37 CFR 1.17(h) was charged to the deposit account as authorized.

The request and petition are **granted**.

A grantable request to participate in the PPH pilot program and petition to make special require:

(1) The U.S. application must validly claim priority under 35 U.S.C. 119(a) to one or more applications filed in the CIPO;
(2) Applicant must submit a copy of the allowable/patentable claim(s) from the CIPO application(s) along with an English translation thereof and a statement that the English translation is accurate;
(3) All the claims in the U.S. application must sufficiently correspond or be amended to sufficiently correspond to the allowable/patentable claim(s) in the CIPO application(s);
(4) Examination of the U.S. application has not begun;
(5) Applicant must submit a copy of all the office actions from each of the CIPO application(s) containing the allowable/patentable claim(s) along with an English translation thereof and a statement that the English translation is accurate;
(6) Applicant must submit an IDS listing the documents cited by the CIPO examiner in the CIPO office action along with copies of documents except U.S. patents or U.S. patent application publications; and
(7) The required petition fee under 37 CFR 1.17(h).

The request to participate in the PPH pilot program and petition comply with the above requirements. Accordingly, the above-identified application has been accorded "special" status.

Telephone inquiries concerning this decision should be directed to Henry C. Yuen, at 571-272-4856.

All other inquiries concerning the examination or status of the application should be directed to Devon Kramer, SPE of Art Unit 3746, 571-272-7118.

The application is being forwarded to the examiner for action on the merits commensurate with this decision.

/Henry C. Yuen/

Henry C. Yuen, Special Programs Examiner
Technology Center 3700 – Mechanical Engineering,
Manufacturing and Products
571-272-4856

UNITED STATES PATENT AND TRADEMARK OFFICE

Commissioner for Patents
United States Patent and Trademark Office
P.O. Box 1450
Alexandria, VA 22313-1450
www.uspto.gov

OBLON, SPIVAK, MCCLELLAND MAIER & NEUSTADT, P.C.
1940 DUKE STREET
ALEXANDRIA, VA 22314

COPY MAILED

JUN 15 2009

OFFICE OF PETITIONS

In re Application of Gerlach et al. :
Application No. 12/117,942 : Decision on Petition
Filing Date: May 9, 2008 :
Attorney Docket No. 325313US99 :

This is a decision in response to the petition filed November 26, 2008, requesting, in effect, that page 93 of the specification filed on November 26, 2008, be entered as part of the original disclosure.

The petition is **dismissed**.

The application was filed May 9, 2008.

The Office of Initial Patent Examination mailed a Notice to File Missing Parts of Nonprovisional Application on September 26, 2008. The Notice stated page 93 of the specification did not appear to be part of the application as filed.

In response, the present petition was filed. Petitioner alleges page 93 of the specification was filed with the original application.

All the evidence present in the file has been carefully considered, but is not persuasive that page 93 of the specification was submitted with the original application.

Petitioner alleges the Acknowledgment Receipt from the Office supports a conclusion page 93 of the specification was filed May 9, 2008. However, the Electronic Acknowledgment Receipt actually supports a conclusion the page was not received.

The Electronic Acknowledgment Receipt indicates the Office received the following items on May 9, 2008:

(1) 2 transmittal pages,
(2) 3 pages of Application Data Sheet,
(3) 356 pages of Specification,
(4) 229 pages of Claims, and
(5) 1 page of Abstract.

The Image File Wrapper contains each of the items above. For example, the file wrapper contains 356 pages of specification numbered as pages 1-92 and 94-357.

Since the pages of the specification include a page labeled as page 357, petitioner clearly intended to file 357 pages of specification. However, the record indicates only 356 pages were actually filed.

Since applicants have not filed a petition under 37 CFR 1.182 requesting November 26, 2008, the date the missing page was filed, become the new filing date, the missing page will not be entered.

Unless a request for reconsideration is filed, an amendment to the specification deleting references to the missing Figure should be filed prior to the first USPTO action in order to avoid further delays in the examination of the application. In the alternative, if some of the material in the missing Figure is not new matter, petitioner may wish to submit the missing material in the form of an amendment.

Page 93 of the specification filed November 26, 2008, was not present in the Office on May 9, 2008. Therefore, Page 93 of the specification is not part of the original disclosure of the present application and will not be used to process the application.

The original application papers will include only those application papers present on the date of deposit.

Any request for reconsideration must be submitted within TWO (2) MONTHS from the mail date of this decision. No further petition fee is required for the request. Extensions of time under 37 CFR 1.136(a) are NOT permitted. The reconsideration request should include a cover letter entitled "Renewed Petition under 37 CFR 1.53."

Unless filed by EFS Web, any further correspondence with respect to this matter should be addressed as follows:

By mail: Mail Stop Petition
Commissioner for Patents
P.O. Box 1450
Alexandria, VA 22313-1450

By facsimile: (571) 273-8300
Attn: Office of Petitions

The Office of Patent Examination Processing will be informed of the instant decision and will process the application with a filing date of May 9, 2008, using only the application papers filed on May 9, 2008. Page 93 of the specification filed November 26, 2008, was not present in the Office on May 9, 2008. Therefore, Page 93 of the specification was not part of the original disclosure of the present application and will not be used when processing the application.

Telephone inquiries regarding this communication should be directed to Petitions Attorney Steven Brantley at (571) 272-3203.

Charles Steven Brantley
Senior Petitions Attorney
Office of Petitions

UNITED STATES PATENT AND TRADEMARK OFFICE

Commissioner for Patents
United States Patent and Trademark Office
P.O. Box 1450
Alexandria, VA 22313-1450
www.uspto.gov

MAIL

JUL 08 2008

DIRECTOR'S OFFICE
TECHNOLOGY CENTER 2600

CANTOR COLBURN LLP - IBM AUSTIN
20 Church Street
22nd Floor
Hartford CT 06103

In re Application of:
HALCROW, MICHAEL A., et al.
Serial No.: 12/118,003
Filed: May 9, 2008

Title: **METHOD FOR ARCHIVING SCENE PROPS**

DECISION ON PETITION TO MAKE SPECIAL FOR NEW APPLICATION UNDER 37 C.F.R. § 1.102 & M.P.E.P. § 708.02

This is a decision on the petition filed on May 9, 2008 requesting reconsideration to make the above-identified application special for accelerated examination procedure under 37 C.F.R. § 1.102(d).

All of the requirements to correct the deficiencies outlined in the petition decision mailed November 21, 2007 have been met.

The petition to make the application special is **GRANTED**.

The application is eligible for accelerated examination and the petition complies with the conditions for granting the application special status pursuant to the "Change to Practice for Petitions in Patent Applications to Make Special and for Accelerated Examination" published June 26, 2006, in the Federal Register. (71 Fed. Reg. 36323).

The prosecution of the instant application will be conducted expeditiously according to the following guidelines.

1. The application will be docketed to an examiner and taken up for action within two weeks of the date of this decision.

2. Restriction Practice:
   If the examiner determines that the claims are not directed to a single invention, a telephone request to elect one single invention will be made pursuant to MPEP 812.01.

As a prerequisite to the grant of this petition, the applicant has agreed to make an oral election, by telephone, without traverse. If the applicant refuses to make an election without traverse, or the examiner cannot reach the applicant after a reasonable effort, the examiner will treat the first claimed invention (invention defined by claim 1) as having being constructively elected without traverse for examination.

3. Office action:
If it is determined that, after appropriate consultation, there is a potential rejection or any other issue to be addressed, the examiner will telephone the applicant and arrange an interview to discuss and resolve the issue. An Office action, other than a Notice of Allowance and Fee(s) Due (Notice of Allowance), will not be issued unless either: 1) an interview was conducted but did not result in agreed to action that places the application in condition for allowance, or, 2) a determination is made that an interview would be unlikely to result in the application being placed in condition for allowance, and 3) an internal conference has been held to review any rejection of any claim.

4. Time for Reply:
An Office action other than a Notice of Allowance or a final Office action will set a shortened statutory period of one month or thirty days, whichever is longer, for reply with no extension of time available under 37 CFR 1.136(a). Failure to timely file a reply within this non-extendible period for reply will result in the abandonment of the application.

5. Reply by Applicant:
A timely reply to an Office action other than the Notice of Allowance must be submitted electronically via EFS or EFS-web and limited to addressing the rejections, objections and requirement made. Any amendment that attempts to: 1) add claims which would result in more than three pending independent claims or more than twenty pending total claims; 2) present claims not encompassed by the pre-examination search or an updated accelerated examination support document; or 3) present claims that are directed a non-elected invention or an invention other than that previously claimed and examined in the application, will be treated as not fully responsive and will not be entered.

For any amendment to the claims (including any new claim) that is not encompassed by the accelerated examination support document, applicant must provide an updated accelerated examination support document that encompasses the amended or new claims at the time of filing of the amendment.

To proceed expeditiously with the examination, it is recommended that a reply with amendments made to any claim or with any new claim being added be accompanied by an updated accelerated examination support document or a statement explaining how the amended or new claim is supported by the original accelerated examination support document.

6. Information Disclosure Statement (IDS):

Any IDS filed during prosecution must be submitted electronically via EFS or EFS-web, accompanied by an updated accelerated examination support document, and be in compliance with 37 CFR 1.97 and 1.98.

7. Post-Allowance Processing:
   To expedite processing of the allowed application into a patent, the applicant must: 1) pay the required fees within one month of the date of the Notice of Allowance, and 2) not file any post allowance papers not required by the Office. In no event may the issue fee be paid and accepted later than three months from the date of the Notice of Allowance.

8. After-Final and Appeal Procedures:
   To expedite prosecution, after receiving the final Office action, applicant must: 1) promptly file a notice of appeal, an appeal brief and appeal fees; and 2) not request a pre-appeal brief conference.

   Any amendment, affidavit or other evidence filed after final Office action must comply with applicable rules and the requirements outlined in numbered paragraphs 5 and 6 above.

   On appeal, the application will proceed according to normal appeal procedures. After appeal, the application will again be treated special.

9. Proceedings Outside the Normal Examination Process:
   If the application becomes involved in a proceeding that is outside the normal examination process (e.g., a secrecy order, national security review, interference proceeding, petitions under 37 CFR 1.181, 182 or 183), the application will be treated special before and after such proceeding.

10. Final Disposition:
    The twelve month goal of this accelerated examination procedure ends with a final disposition. The mailing of a final Office action, a Notice of Allowance, the filing of a Notice of Appeal, or the filing of a Request for Continued Examination (RCE) is the final disposition.

If, during prosecution, a paper is not filed electronically using EFS-web, a reply is filed but is not fully responsive, the application is involved in an appeal, or a proceeding outside normal examination process, the application will still be examined expeditiously, however, the final disposition may occur more than twelve months from the filing of the application.

Any inquiry regarding this decision should be directed to Ken Wieder, Quality Assurance Specialist, at (571) 272-2986.

Kenneth A. Wieder
Quality Assurance Specialist
Technology Center 2600
Communications

UNITED STATES PATENT AND TRADEMARK OFFICE

Commissioner for Patents
United States Patent and Trademark Office
P.O. Box 1450
Alexandria, VA 22313-1450
www.uspto.gov

In re Application of :
Maximilain Rosenzweig :

Application No. 12118015 :DECISION ON PETITION TO MAKE SPECIAL
Filed: :UNDER 37 CFR 1.102(c)(1)
:

Attorney Docket No. EURO-275K (086084.016220)

This is a decision on the electronic petition under 37 CFR 1.102 (c)(1) ,filed 09-MAY-2008 to make the above-identified application special based on applicant's age as set forth in MPEP § 708.02, Section IV.

The petition is **GRANTED**.

A grantable petition to make an application special under 37 CFR 1.102(c)(1), MPEP § 708.02, Section IV: Applicant's Age must include a statement by applicant or a registered practitioner having evidence that applicant is at least 65 years of age. No fee is required.

Accordingly, the above-identified application has been accorded “special” status and will be taken up for action by the examiner upon the completion of all pre-examination processing.

Telephone inquires concerning this electronic decision should be directed to the Electronic Business Center at 866-217-9197.

All other inquires concerning either the examination or status of the application should be directed to the Technology Center.

PTO/SB/130 (03-08)
Approved for use through 05/31/2008. OMB 0651- 0031
U.S. Patent and Trademark Office; U.S. DEPARTMENT OF COMMERCE
Under the Paperwork Reduction Act of 1995, no persons are required to respond to a collection of information unless it contains a valid OMB control number

PETITION TO MAKE SPECIAL BASED ON AGE FOR ADVANCEMENT OF EXAMINATION UNDER 37 CFR 1.102(c)(1)

Application Information

Application Number	12118015	Confirmation Number	1164	Filing Date	2008-05-09
Attorney Docket Number (optional)	EURO-275K	Art Unit		Examiner	
First Named Inventor	Maximilian ROSENZWEIG				
Title of Invention	Universal Connector for a Fluid Mop				

Attention: Office of Petitions

An application may be made special for advancement of examination upon filing of a petition showing that the applicant is 65 years of age, or more. No fee is required with such a petition. See 37 CFR 1.102(c)(1) and MPEP 708.02 (IV).

APPLICANT HEREBY PETITIONS TO MAKE SPECIAL FOR ADVANCEMENT OF EXAMINATION IN THIS APPLICATION UNDER 37 CFR 1.102(c)(1) and MPEP 708.02 (IV) ON THE BASIS OF THE APPLICANT'S AGE.

A grantable petition requires one of the following items:
(1) Statement by one named inventor in the application that he/she is 65 years of age, or more; or
(2) Certification by a registered attorney/agent having evidence such as a birth certificate, passport, driver's license, etc. showing one named inventor in the application is 65 years of age, or more.

Name of Inventor who is 65 years of age, or older

Given Name	Middle Name	Family Name	Suffix
Maximilian		Rosenzweig	

A signature of the applicant or representative is required in accordance with 37 CFR 1.33 and 10.18.
Please see 37 CFR 1.4(d) for the format of the signature.

Select (1) or (2) :

○ (1) I am an inventor in this application and I am 65 years of age, or more.

◉ (2) I am an attorney or agent registered to practice before the Patent and Trademark Office, and I certify that I am in possession of evidence, and will retain such in the application file record, showing that the inventor listed above is 65 years of age, or more.

Signature	/Michael I. Wolfson/	Date (YYYY-MM-DD)	2008-05-09
Name	Michael I. Wolfson	Registration Number	24750

PTO/SB/130 (03-08)
Approved for use through 05/31/2008. OMB 0651- 0031
U.S. Patent and Trademark Office; U.S. DEPARTMENT OF COMMERCE
Under the Paperwork Reduction Act of 1995, no persons are required to respond to a collection of information unless it contains a valid OMB control number

Privacy Act Statement

The Privacy Act of 1974 (P.L. 93-579) requires that you be given certain information in connection with your submission of the attached form related to a patent application or patent. Accordingly, pursuant to the requirements of the Act, please be advised that: (1) the general authority for the collection of this information is 35 U.S.C. 2(b)(2); (2) furnishing of the information solicited is voluntary; and (3) the principal purpose for which the information is used by the U.S. Patent and Trademark Office is to process and/or examine your submission related to a patent application or patent. If you do not furnish the requested information, the U.S. Patent and Trademark Office may not be able to process and/or examine your submission, which may result in termination of proceedings or abandonment of the application or expiration of the patent.

The information provided by you in this form will be subject to the following routine uses:

1. The information on this form will be treated confidentially to the extent allowed under the Freedom of Information Act (5 U.S.C. 552) and the Privacy Act (5 U.S.C. 552a). Records from this system of records may be disclosed to the Department of Justice to determine whether the Fr eedom of Information Act requires disclosure of these records.

2. A record from this system of records may be disclosed, as a routine use, in the course of presenting evidence to a court, magistrate, or administrative tribunal, including disclosures to opposing counsel in the course of settlement negotiations.

3. A record in this system of records may be disclosed, as a routine use, to a Member of Congress submitting a request involving an individual, to whom the record pertains, when the individual has requested assistance from the Member with respect to the subject matter of the record.

4. A record in this system of records may be disclosed, as a routine use, to a contractor of the Agency having need for the information in order to perform a contract. Recipients of information shall be required to comply with the requirements of the Privacy Act of 1974, as amended, pursuant to 5 U.S.C. 552a(m).

5. A record related to an International Application filed under the Patent Cooperation Treaty in this system of records may be disclosed, as a routine use, to the International Bureau of the World Intellectual Property Organization, pursuant to the Patent Cooperation Treaty.

6. A record in this system of records may be disclosed, as a routine use, to another federal agency for purposes of National Security review (35 U.S.C. 181) and for review pursuant to the Atomic Energy Act (42 U.S.C. 218(c)).

7. A record from this system of records may be disclosed, as a routine use, to the Administrator, General Services, or his/her designee, during an inspection of records conducted by GSA as part of that agency's responsibility to recommend improvements in records management practices and programs, under authority of 44 U.S.C. 2904 and 2906. Such disclosure shall be made in accordance with the GSA regulations governing inspection of records for this purpose, and any other relevant (i.e., GSA or Commerce) directive. Such disclosure shall not be used to make determinations about indivi duals.

8. A record from this system of records may be disclosed, as a routine use, to the public after either publication of the application pursuant to 35 U.S.C. 122(b) or issuance of a patent pursuant to 35 U.S.C. 151. Further, a record may be disclosed, subject to the limitations of 37 CFR 1.14, as a routine use, to the public if the record was filed in an application which became abandoned or in which the proceedings were terminated and which application is referenced by either a published application, an application open to public inspections or an issued patent.

9. A record from this system of records may be disclosed, as a routine use, to a Federal, State, or local law enforcement agency, if the USPTO becomes aware of a violation or potential violation of law or regulation.

UNITED STATES PATENT AND TRADEMARK OFFICE

UNITED STATES DEPARTMENT OF COMMERCE
United States Patent and Trademark Office
Address: COMMISSIONER FOR PATENTS
P.O. Box 1450
Alexandria, Virginia 22313-1450
www.uspto.gov

APPLICATION NO.	FILING DATE	FIRST NAMED INVENTOR	ATTORNEY DOCKET NO.	CONFIRMATION NO.
12/118,050	05/09/2008	Victor Zyuban	YOR920070248US2	1233

48915 7590 08/25/2008
CANTOR COLBURN LLP-IBM YORKTOWN
20 Church Street
22nd Floor
Hartford, CT 06103

EXAMINER
AN, MENG AI T

ART UNIT	PAPER NUMBER
2195	

MAIL DATE	DELIVERY MODE
08/25/2008	PAPER

Please find below and/or attached an Office communication concerning this application or proceeding.

The time period for reply, if any, is set in the attached communication.

UNITED STATES PATENT AND TRADEMARK OFFICE

Commissioner for Patents
United States Patent and Trademark Office
P.O. Box 1450
Alexandria, VA 22313-1450
www.uspto.gov

Mr. Sean F. Sullivan
IBM - Yorktown
c/o Cantor Colburn LLP
20 church street
22nd floor
Hartford, CT 06103

In re Application of:
Victor ZYUBAN, et al.
Application No. 12/118050
Filed: May 9, 2008
For: METHOD FOR IMPLEMENTING DYNAMIC LIFETIME RELIABILITY EXTENSION FOR MICROPROCESSOR ARCHITECTURES

DECISION ON PETITION TO MAKE SPECIAL (ACCELERATED EXAMINATION) UNDER 37 C.F.R. § 1.102(d) and M.P.E.P. §708.02

This is a decision on the petition filed on May 9, 2008 to make the above-identified application special for accelerated examination procedure under 37 C.F.R. § 1.102(d).

The petition to make the application special is **DISMISSED**.

REGULATION AND PRACTICE

A grantable petition to make special under 37 C.F.R. § 1.102(d) and pursuant to the "Change to Practice for Petitions in Patent Applications to Make Special and for Accelerated Examination" published in the Federal Register on June 26, 2006 (71 Fed. Reg. 36323), must satisfy the following conditions:

I. Conditions Regarding the Application:

1. the application must be a non-reissue utility or design application filed under 37 CFR 1.111(a);

2. the application, the petition and the required fees must be filed electronically using the USPTO's electronic filing system (EFS), or EFS-web; if not filed electronically, a statement asserting that EFS and EFS-web were not available during the normal business hours.

3. at the time of filing, the application must be complete under 37 CFR 1.51 and in condition for examination;

4. the application must contain three or fewer independent claims and twenty or fewer total claims and the claims must be directed to a single invention.

II. Conditions Regarding the Petition:

The petition must:

1. be filed with the application;

2. include a statement that applicant agrees not to separately argue the patentability of any dependent claim during any appeal in the application;

3. include a statement that applicant agrees to make an election without traverse in a telephone interview.

4. include a statement that applicant agrees to conduct such an interview when requested by the examiner.

5. include a statement, made based on a good faith belief, that a preexamination search in compliance with the following requirements, was conducted, including an identification of the field of search by United States class and subclass, where applicable, and for database searches, the search logic or chemical structure or sequence used as a query, the name of the file(s) searched and the database service, and the date of the search.

The preexamination search must:

5.1 involve U.S. patents and patent application publications, foreign patent documents, and non-patent literature, unless the applicant can justify with reasonable certainty that no references more pertinent than those already identified are likely to be found in the eliminated sources and includes such a justification with this statement;

5.2. be directed to the claimed invention and encompass all of the features of the claims, giving the claims the broadest reasonable interpretation;

5.3. encompass the disclosed features that may be claimed.

6. must provide in support of the petition an accelerated examination support document. An accelerated examination support document must include:

6.1. an information disclosure statement (IDS) in compliance with 37 CFR 1.98 citing each reference deemed most closely related to the subject matter of each of the claims;

6.2. an identification of all the limitations in the claims that are disclosed by the reference specifying where the limitation is disclosed in the cited reference;

6.3. a detailed explanation of how each of the claims is patentable over the references cited with particularity required by 37 CFR 1.111(b) and (c);

6.4. a concise statement of the utility of the invention as defined in each of the independent claims (unless the application is a design application);

6.5. a showing of where each limitation of the claims finds support under 35 USC 112, first paragraph, in the written description of the specification. If applicable, the showing must also identify: (1) each means- (or step) plus-function claim element that invokes consideration under 35 USC 112, sixth paragraph; and (2) the structure, material, or acts in the specification that corresponds to each means- (or step) plus-function claim element that invokes consideration under 35 USC 112, sixth paragraph; if the application claims the benefit of one or more applications under title 35, United States Code, the showing must also include where each limitation of the claims finds support under 35 USC 112, first paragraph, in each such application in which such supports exists;

6.6. an identification of any cited references that may be disqualified under 35 USC 103(c).

REVIEW OF FACTS

The conditions I. 1-4, II. 1-4, 5, 5.1, 6.1 - 6.6 above are considered to have been met. However, the petition fails to comply with conditions II. 5.2 & 5.3 above. Therefore, the petition fails to meet the required conditions to be accorded special status under the accelerated examination procedure.

Regarding the requirement of MPEP § 708.02(a)(I.)(H) and items **5.2** & **5.3** above, the preexam search must be directed to the (instant) claimed invention and encompass all of the disclosed features of the claim. Note, the provision of the identified search area and search logic provided to locate the references cited in the instant petition does not meet this requirement, in particular, based upon the claimed subject matter of the instant application, a search in the following class and subclass (classification search) is necessary in order to provide full coverage of where the most pertinent references are most likely to be found: class 718 (ELECTRICAL COMPUTERS AND DIGITAL PROCESSING SYSTEMS: VIRTUAL MACHINE TASK OR PROCESS MANAGEMENT OR TASK MANAGEMENT/CONTROL) subclasses 104 and 105 (where the instant application is classified), as well as class 709 (ELECTRICAL COMPUTERS AND DIGITAL PROCESSING SYSTEMS: MULTICOMPUTER DATA TRANSFERRING subclasses 223-226, drawn to computer network managing, network resource allocating for claims 1-5, should be searched.

With respect to the search logic identified, corresponding to the instant claim language, the search terms utilized appear be incomplete. In conjunction with the above noted classification search, the following additional (supplemental) search terms and their various combinations (or equivalent) should be incorporated to complete the search:

Resource with (allocating or assigning or mapping)
Resource with monitoring with (usage or threshold) and resource with adjustment with priority
Resource with reservation

This additional recommended search area was confirmed with (and recommended by) a (primary) examiner in the pertinent art area, based upon the pending claim of the instant application.

Thus, the petition does not meet the conditions II. 5.2 and 5.3 above.

With respect to the requirement of MPEP § 708.02(a)(I.)(I)(5) and item **II.6.5** above, the statement of support under 35 U.S.C. 112, First paragraph in the instant specification is adequate. However, the petition fails to identify corresponding support for each claim limitation in the specification for the parent Application 11/969,413 as required above. Correction is required.

Because the petition fails to satisfy all of the criteria set forth above, the petition to make special is **DISMISSED**.

Petitioner is given a single opportunity to perfect the petition. Any request for reconsideration of this decision must be submitted within 1 (one) month or 30 (thirty) days, whichever is longer, (no extension of time under 37 CFR 1.136(a)) from the date of this decision in order to be considered timely. Any request for reconsideration must address the deficiencies indicated above.

Petitioner is reminded that, upon granting of the special status of the application on request for reconsideration, the application will be processed expeditiously. However, due to the dismissal of the instant petition, examination may not be completed within twelve months of the filing date of the application.

Until the renewed petition is submitted, the application will be returned to the examiner's docket to await treatment on the merits in the normal order of examination.

/Kakali Chaki/

Kakali Chaki, Quality Assurance Specialist
Technology Center 2100

UNITED STATES PATENT AND TRADEMARK OFFICE

UNITED STATES DEPARTMENT OF COMMERCE
United States Patent and Trademark Office
Address: COMMISSIONER FOR PATENTS
P.O. Box 1450
Alexandria, Virginia 22313-1450
www.uspto.gov

APPLICATION NO.	FILING DATE	FIRST NAMED INVENTOR	ATTORNEY DOCKET NO.	CONFIRMATION NO.
12/118,050	05/09/2008	Victor Zyuban	YOR920070248US2	1233

48915 7590 03/10/2009
CANTOR COLBURN LLP-IBM YORKTOWN
20 Church Street
22nd Floor
Hartford, CT 06103

EXAMINER
TO, JENNIFER N

ART UNIT	PAPER NUMBER
2195	

NOTIFICATION DATE	DELIVERY MODE
03/10/2009	ELECTRONIC

Please find below and/or attached an Office communication concerning this application or proceeding.

The time period for reply, if any, is set in the attached communication.

Notice of the Office communication was sent electronically on above-indicated "Notification Date" to the following e-mail address(es):

usptopatentmail@cantorcolburn.com

UNITED STATES PATENT AND TRADEMARK OFFICE

Commissioner for Patents
United States Patent and Trademark Office
P.O. Box 1450
Alexandria, VA 22313-1450
www.uspto.gov

March 5, 2009

SEAN F. SULLIVAN
20 CHURCH ST 22ND FLOOR
HARTFORD CT 06103

In re Application of: Victor Zyuban et al.
Serial No: 12/118050
Filed: May 9, 2008
Docket: YOR920070248US2
Title: METHOD FOR IMPLEMENTING DYNAMIC LIFETIME RELIABILITY EXTENSION FOR MICROPROCESSOR ARCHITECTURES

DECISION ON PETITION TO MAKE SPECIAL FOR NEW APPLICATION UNDER 37 C.F.R. § 1.102 & M.P.E.P. § 708.02

This is a decision on the petition filed on September 24, 2008 to make the above-identified application special for accelerated examination procedure under 37 C.F.R. § 1.102(d).

The petition to make the application special is **GRANTED**.

The application is eligible for accelerated examination and the petition complies with the conditions for granting the application special status pursuant to the "Change to Practice for Petitions in Patent Applications to Make Special and for Accelerated Examination" published June 26, 2006, in the Federal Register. (71 Fed. Reg. 36323).

The prosecution of the instant application will be conducted expeditiously according to the following guidelines.

1. The application will be docketed to an examiner and taken up for action within two weeks of the date of this decision.

2. Restriction Practice:
   If the examiner determines that the claims are not directed to a single invention, a telephone request to elect one single invention will be made pursuant to MPEP 812.01. As a prerequisite to the grant of this petition, the applicant has agreed to make an oral election, by telephone, without traverse. If the applicant refuses to make an election without traverse, or the examiner cannot reach the applicant after a reasonable effort, the examiner will treat the first claimed invention (invention defined by claim 1) as having being constructively elected without traverse for examination.

3. Office action:
   If it is determined that, after appropriate consultation, there is a potential rejection or any other issue to be addressed, the examiner will telephone the applicant and arrange an interview to discuss and resolve the issue. An Office action, other than a Notice of Allowance and Fee(s) Due (Notice of Allowance), will not be issued unless either: 1) an interview was conducted but did not result in agreed to action that places the application in condition for allowance, or, 2) a determination is made that an interview would be unlikely to result in the application being placed in condition for allowance, and 3) an internal conference has been held to review any rejection of any claim.

4. Time for Reply:
   An Office action other than a Notice of Allowance or a final Office action will set a shortened statutory period of one month or thirty days, whichever is longer, for reply with no extension of time available under 37 CFR 1.136(a). Failure to timely file a reply within this non-extendible period for reply will result in the abandonment of the application.

5. Reply by Applicant:
   A timely reply to an Office action other than the Notice of Allowance must be submitted electronically via EFS or EFS-web and limited to addressing the rejections, objections and requirement made. Any amendment that attempts to: 1) add claims which would result in more than three pending independent claims or more than twenty pending total claims; 2) present claims not encompassed by the pre-examination search or an updated accelerated examination support document; or 3) present claims that are directed a non-elected invention or an invention other than that previously claimed and examined in the application, will be treated as not fully responsive and will not be entered.

   For any amendment to the claims (including any new claim) that is not encompassed by the accelerated examination support document, applicant must provide an updated accelerated examination support document that encompasses the amended or new claims at the time of filing of the amendment.

   To proceed expeditiously with the examination, it is recommended that a reply with amendments made to any claim or with any new claim being added be accompanied by an updated accelerated examination support document or a statement explaining how the amended or new claim is supported by the original accelerated examination support document.

6. Information Disclosure Statement (IDS):
   Any IDS filed during prosecution must be submitted electronically via EFS or EFS-web, accompanied by an updated accelerated examination support document, and be in compliance with 37 CFR 1.97 and 1.98.

7. Post-Allowance Processing:
   To expedite processing of the allowed application into a patent, the applicant must: 1) pay the required fees within one month of the date of the Notice of Allowance, and 2) not file any post allowance papers not required by the Office. In no event may the issue fee be paid and accepted later than three months from the date of the Notice of Allowance.

8. After-Final and Appeal Procedures:
   To expedite prosecution, after receiving the final Office action, applicant must: 1) promptly file a notice of appeal, an appeal brief and appeal fees; and 2) not request a pre-appeal brief conference.

   Any amendment, affidavit or other evidence filed after final Office action must comply with applicable rules and the requirements outlined in numbered paragraphs 5 and 6 above.

   On appeal, the application will proceed according to normal appeal procedures. After appeal, the application will again be treated special.

9. Proceedings Outside the Normal Examination Process:
   If the application becomes involved in a proceeding that is outside the normal examination process (e.g., a secrecy order, national security review, interference proceeding, petitions under 37 CFR 1.181, 182 or 183), the application will be treated special before and after such proceeding.

10. Final Disposition:
    The twelve month goal of this accelerated examination procedure ends with a final disposition. The mailing of a final Office action, a Notice of Allowance, the filing of a Notice of Appeal, or the filing of a Request for Continued Examination (RCE) is the final disposition.

If, during prosecution, a paper is not filed electronically using EFS-web, a reply is filed but is not fully responsive, the application is involved in an appeal, or a proceeding outside normal examination process, the application will still be examined expeditiously, however, the final disposition may occur more than twelve months from the filing of the application.

Any inquiry regarding this decision should be directed to Gail Hayes, Quality Assurance Specialist, (571) 272-3591.

___/Gail Hayes/_____
Gail Hayes, Quality Assurance Specialist
Technology Center 2100

RLE

UNITED STATES PATENT AND TRADEMARK OFFICE

COMMISSIONER FOR PATENTS
UNITED STATES PATENT AND TRADEMARK OFFICE
P.O. BOX 1450
ALEXANDRIA, VA 22313-1450
www.uspto.gov

COPY MAILED

MAR 16 2009

OFFICE OF PETITIONS

MCANDREWS HELD & MALLOY, LTD
500 WEST MADISON STREET
SUITE 3400
CHICAGO IL 60661

In re Application of
Muir, et al.
Application No. 12/118,127
Filed: May 9, 2008
Attorney Docket No. 19699US01

DECISION REFUSING STATUS
UNDER 37 CFR 1.47(a)

This is in response to the petition under 37 CFR 1.47(a), filed December 24, 2008.

The petition is DISMISSED.

Rule 47 applicant is given TWO (2) MONTHS from the mailing date of this decision to reply, correcting the below-noted deficiencies. Any reply should be entitled "Request for Reconsideration of Petition Under 37 CFR 1.47(a)," and should only address the deficiencies noted below, except that the reply may include an oath or declaration executed by the non-signing inventor. **FAILURE TO RESPOND WILL RESULT IN ABANDONMENT OF THE APPLICATION.** Any extensions of time will be governed by 37 CFR 1.136(a).

A grantable petition under 37 CFR 1.47(a) requires: (1) proof that the non-signing inventor cannot be reached or refuses to sign the oath or declaration after having been presented with the application papers (specification, claims and drawings); (2) an acceptable oath or declaration in compliance with 35 U.S.C. §§ 115 and 116; (3) the petition fee; and (4) a statement of the last known address of the non-signing inventor.

The instant petition lacks item (2) set forth above. While the petition references the submission of an executed declaration, no such document is found amongst the papers files December 24, 2008. Any renewed petition must be accompanied by an oath or declaration executed by the available inventor(s).

As to item (3), the required petition fee has been charged to petitioners' deposit account, as authorized.

Further correspondence with respect to this matter should be addressed as follows:

By Mail: Mail Stop PETITION

Commissioner for Patents
Post Office Box 1450
Alexandria, VA 22313-1450

By Hand: U. S. Patent and Trademark Office
Customer Window, Mail Stop PETITIONS
401 Dulany Street
Alexandria, VA 22314

The centralized facsimile number is **(571) 273-8300.**

Telephone inquiries should be directed to the undersigned at (571) 272-3205.

/ALESIA M. BROWN/
Alesia M. Brown
Petitions Attorney
Office of Petitions

UNITED STATES PATENT AND TRADEMARK OFFICE

COMMISSIONER FOR PATENTS
UNITED STATES PATENT AND TRADEMARK OFFICE
P.O. BOX 1450
ALEXANDRIA, VA 22313-1450
www.uspto.gov

MCANDREWS HELD & MALLOY, LTD
500 WEST MADISON STREET
SUITE 3400
CHICAGO IL 60661

COPY MAILED

JUN 19 2009

OFFICE OF PETITIONS

In re Application of	:	
Muir, et al.	:	DECISION REFUSING STATUS
Application No. 12/118,127	:	UNDER 37 CFR 1.47(a)
Filed: May 9, 2008	:	
Attorney Docket No. 19699US01	:	

This is in response to the renewed petition under 37 CFR 1.47(a), filed May 13, 2009.

The petition is DISMISSED.

Rule 47 applicant is given TWO (2) MONTHS from the mailing date of this decision to reply, correcting the below-noted deficiencies. Any reply should be entitled "Request for Reconsideration of Petition Under 37 CFR 1.47(a)," and should only address the deficiencies noted below, except that the reply may include an oath or declaration executed by the non-signing inventor. **FAILURE TO RESPOND WILL RESULT IN ABANDONMENT OF THE APPLICATION.** Any extensions of time will be governed by 37 CFR 1.136(a).

A grantable petition under 37 CFR 1.47(a) requires: (1) proof that the non-signing inventor cannot be reached or refuses to sign the oath or declaration after having been presented with the application papers (specification, claims and drawings); (2) an acceptable oath or declaration in compliance with 35 U.S.C. §§ 115 and 116; (3) the petition fee; and (4) a statement of the last known address of the non-signing inventor.

The instant petition fails to satisfy requirement (2) set forth above. An acceptable oath or declaration for the patent application in compliance with 37 CFR 1.63 and 1.64 has not been presented. The declaration submitted herewith is not acceptable as it fails to properly identify the entire inventive entity. The non-signing inventor is not identified by name, residence, mailing address, and citizenship.

Any renewed petition should be accompanied by a proper oath or declaration wherein the name, address, residence, and citizenship of each inventor is set forth. The declaration should be executed by the available inventor. The signature block of the non-signing inventor should remain unexecuted. *See* MPEP 409.03(b).

Further correspondence with respect to this matter should be addressed as follows:

By Mail: Mail Stop PETITION
Commissioner for Patents
Post Office Box 1450
Alexandria, VA 22313-1450

By Hand: U. S. Patent and Trademark Office
Customer Window, Mail Stop PETITIONS
401 Dulany Street
Alexandria, VA 22314

The centralized facsimile number is **(571) 273-8300.**

Telephone inquiries should be directed to the undersigned at (571) 272-3205.

/ALESIA M. BROWN/
Alesia M. Brown
Petitions Attorney
Office of Petitions

UNITED STATES PATENT AND TRADEMARK OFFICE

COMMISSIONER FOR PATENTS
UNITED STATES PATENT AND TRADEMARK OFFICE
P.O. BOX 1450
ALEXANDRIA, VA 22313-1450
www.uspto.gov

MCANDREWS HELD & MALLOY, LTD
500 WEST MADISON STREET
SUITE 3400
CHICAGO IL 60661

COPY MAILED

DEC 08 2009

OFFICE OF PETITIONS

In re Application of
Muir, et al.
Application No. 12/118,127
Filed: May 9, 2008
Attorney Docket No. 19699US01

DECISION GRANTING STATUS
UNDER 37 CFR 1.47(a)

This is in response to the renewed petition under 37 CFR 1.47(a), filed November 3, 2009.

The petition is GRANTED.

Petitioner has shown that the non-signing inventor either cannot be located or has refused to join in the filing of the above-identified application.

The application and papers have been reviewed and found in compliance with 37 CFR 1.47(a). This application is hereby accorded Rule 1.47(a) status.

As provided in 37 CFR 1.47(c), this Office will forward notice of this application's filing to the non-signing inventor at the address given in the petition. Notice of the filing of this application will also be published in the Official Gazette.

This application is being referred to the Office of Patent Application Processing for pre-examination processing.

Telephone inquiries regarding this decision should be directed to the undersigned at (571) 272-3205.

/ALESIA M. BROWN/

Alesia M. Brown
Petitions Attorney
Office of Petitions

UNITED STATES PATENT AND TRADEMARK OFFICE

COMMISSIONER FOR PATENTS
UNITED STATES PATENT AND TRADEMARK OFFICE
P.O. BOX 1450
ALEXANDRIA, VA 22313-1450
www.uspto.gov

Martin Stephen Lyons
122 Victoria Street
Beaconsfield, NSW, 2015
Australia

COPY MAILED

DEC 0 8 2009

OFFICE OF PETITIONS

In re Application of
Muir, et al.
Application No. 12/118,127
Filed: May 9, 2008
Attorney Docket No. 19699US01

Dear Sir:

You are named as a joint inventor in the above-identified United States patent application, filed under the provisions of 35 U.S.C. 116 (United States Code), and 37 CFR 1.47(a), Rules of Practice in Patent Cases. Should a patent be granted on the application you will be designated therein as a joint inventor.

As a named inventor you are entitled to inspect any paper in the file wrapper of the application, order copies of all or any part thereof (at a prepaid cost per 37 CFR 1.19) or make your position of record in the application. Alternatively, you may arrange to do any of the preceding through a registered patent attorney or agent presenting written authorization from you. If you care to join the application, counsel of record (see below) would presumably assist you. Joining the application would entail the filing of an appropriate oath or declaration by you pursuant to 37 CFR 1.63.

Telephone inquiries regarding this communication should be directed to the undersigned at (571) 272-3205. Requests for information regarding your application should be directed to the File Information Unit at (703) 308-2733. Information regarding how to pay for and order a copy of the application, or a specific paper in the application, should be directed to the Certification Division at (571) 272-3150 or 1 (800) 972-6382 (outside the Washington, DC area).

Alesia M. Brown
Petitions Attorney
Office of Petitions

cc: MCANDREWS HELD & MALLOY, LTD
500 WEST MADISON STREET
SUITE 3400
CHICAGO IL 60661
1 Becton Drive, MC 110
Franklin Lakes NJ 07417-1880

UNITED STATES PATENT AND TRADEMARK OFFICE

UNITED STATES DEPARTMENT OF COMMERCE
United States Patent and Trademark Office
Address: COMMISSIONER FOR PATENTS
P.O. Box 1450
Alexandria, Virginia 22313-1450
www.uspto.gov

Bib Data Sheet

CONFIRMATION NO. 1402

SERIAL NUMBER	FILING OR 371(c) DATE	CLASS	GROUP ART UNIT	ATTORNEY DOCKET NO.
12/118,127	05/09/2008 RULE 1.47	463	3714	19699US01

APPLICANTS

Robert Linley Muir, Artarmon, AUSTRALIA;
Martin Stephen Lyons, Beaconsfield, AUSTRALIA;

**** CONTINUING DATA ****************************

**** FOREIGN APPLICATIONS ***********************

AUSTRALIA 2007902612 05/16/2007

IF REQUIRED, FOREIGN FILING LICENSE GRANTED
** 05/20/2008

		STATE OR COUNTRY	SHEETS DRAWING	TOTAL CLAIMS	INDEPENDENT CLAIMS
Foreign Priority claimed 35 USC 119 (a-d) conditions met Verified and Acknowledged	☐ yes ☐ no ☐ yes ☐ no ☐ Met after Allowance Examiner's Signature Initials	AUSTRALIA	8	30	5

ADDRESS
23446

TITLE

Gaming System and a Method of Gaming

FILING FEE RECEIVED		
2080	FEES: Authority has been given in Paper No. _____ to charge/credit DEPOSIT ACCOUNT No. _____ for following:	☐ All Fees ☐ 1.16 Fees (Filing) ☐ 1.17 Fees (Processing Ext. of time) ☐ 1.18 Fees (Issue) ☐ Other _____ ☐ Credit

PTO/SB/130 (03-08)
Approved for use through 05/31/2008. OMB 0651- 0031
U.S. Patent and Trademark Office; U.S. DEPARTMENT OF COMMERCE
Under the Paperwork Reduction Act of 1995, no persons are required to respond to a collection of information unless it contains a valid OMB control number

PETITION TO MAKE SPECIAL BASED ON AGE FOR ADVANCEMENT OF EXAMINATION UNDER 37 CFR 1.102(c)(1)

Application Information

Application Number	12118150	Confirmation Number	1453	Filing Date	2008-05-09
Attorney Docket Number (optional)	2750-008	Art Unit	3651	Examiner	
First Named Inventor	Clarence D. Deal				
Title of Invention	ELECTRIC MOTOR				

Attention: Office of Petitions

An application may be made special for advancement of examination upon filing of a petition showing that the applicant is 65 years of age, or more. No fee is required with such a petition. See 37 CFR 1.102(c)(1) and MPEP 708.02 (IV).

APPLICANT HEREBY PETITIONS TO MAKE SPECIAL FOR ADVANCEMENT OF EXAMINATION IN THIS APPLICATION UNDER 37 CFR 1.102(c)(1) and MPEP 708.02 (IV) ON THE BASIS OF THE APPLICANT'S AGE.

A grantable petition requires one of the following items:
(1) Statement by one named inventor in the application that he/she is 65 years of age, or more; or
(2) Certification by a registered attorney/agent having evidence such as a birth certificate, passport, driver's license, etc. showing one named inventor in the application is 65 years of age, or more.

Name of Inventor who is 65 years of age, or older

Given Name	Middle Name	Family Name	Suffix
Clarence	D.	Deal	

A signature of the applicant or representative is required in accordance with 37 CFR 1.33 and 10.18.
Please see 37 CFR 1.4(d) for the format of the signature.

Select (1) or (2) :

○ (1) I am an inventor in this application and I am 65 years of age, or more.

◉ (2) I am an attorney or agent registered to practice before the Patent and Trademark Office, and I certify that I am in possession of evidence, and will retain such in the application file record, showing that the inventor listed above is 65 years of age, or more.

Signature	/Mary M. Lee/	Date (YYYY-MM-DD)	2008-05-15
Name	Mary M. Lee	Registration Number	31976

PTO/SB/130 (03-08)
Approved for use through 05/31/2008. OMB 0651- 0031
U.S. Patent and Trademark Office; U.S. DEPARTMENT OF COMMERCE
Under the Paperwork Reduction Act of 1995, no persons are required to respond to a collection of information unless it contains a valid OMB control number

Privacy Act Statement

The Privacy Act of 1974 (P.L. 93-579) requires that you be given certain information in connection with your submission of the attached form related to a patent application or patent. Accordingly, pursuant to the requirements of the Act, please be advised that: (1) the general authority for the collection of this information is 35 U.S.C. 2(b)(2); (2) furnishing of the information solicited is voluntary; and (3) the principal purpose for which the information is used by the U.S. Patent and Trademark Office is to process and/or examine your submission related to a patent application or patent. If you do not furnish the requested information, the U.S. Patent and Trademark Office may not be able to process and/or examine your submission, which may result in termination of proceedings or abandonment of the application or expiration of the patent.

The information provided by you in this form will be subject to the following routine uses:

1. The information on this form will be treated confidentially to the extent allowed under the Freedom of Information Act (5 U.S.C. 552) and the Privacy Act (5 U.S.C. 552a). Records from this system of records may be disclosed to the Department of Justice to determine whether the Fr eedom of Information Act requires disclosure of these records.

2. A record from this system of records may be disclosed, as a routine use, in the course of presenting evidence to a court, magistrate, or administrative tribunal, including disclosures to opposing counsel in the course of settlement negotiations.

3. A record in this system of records may be disclosed, as a routine use, to a Member of Congress submitting a request involving an individual, to whom the record pertains, when the individual has requested assistance from the Member with respect to the subject matter of the record.

4. A record in this system of records may be disclosed, as a routine use, to a contractor of the Agency having need for the information in order to perform a contract. Recipients of information shall be required to comply with the requirements of the Privacy Act of 1974, as amended, pursuant to 5 U.S.C. 552a(m).

5. A record related to an International Application filed under the Patent Cooperation Treaty in this system of records may be disclosed, as a routine use, to the International Bureau of the World Intellectual Property Organization, pursuant to the Patent Cooperation Treaty.

6. A record in this system of records may be disclosed, as a routine use, to another federal agency for purposes of National Security review (35 U.S.C. 181) and for review pursuant to the Atomic Energy Act (42 U.S.C. 218(c)).

7. A record from this system of records may be disclosed, as a routine use, to the Administrator, General Services, or his/her designee, during an inspection of records conducted by GSA as part of that agency's responsibility to recommend improvements in records management practices and programs, under authority of 44 U.S.C. 2904 and 2906. Such disclosure shall be made in accordance with the GSA regulations governing inspection of records for this purpose, and any other relevant (i.e., GSA or Commerce) directive. Such disclosure shall not be used to make determinations about indivi duals.

8. A record from this system of records may be disclosed, as a routine use, to the public after either publication of the application pursuant to 35 U.S.C. 122(b) or issuance of a patent pursuant to 35 U.S.C. 151. Further, a record may be disclosed, subject to the limitations of 37 CFR 1.14, as a routine use, to the public if the record was filed in an application which became abandoned or in which the proceedings were terminated and which application is referenced by either a published application, an application open to public inspections or an issued patent.

9. A record from this system of records may be disclosed, as a routine use, to a Federal, State, or local law enforcement agency, if the USPTO becomes aware of a violation or potential violation of law or regulation.

UNITED STATES PATENT AND TRADEMARK OFFICE

Commissioner for Patents
United States Patent and Trademark Office
P.O. Box 1450
Alexandria, VA 22313-1450
www.uspto.gov

In re Application of :
Clarence D. Deal :

Application No. 12118150 :DECISION ON PETITION TO MAKE SPECIAL
Filed: :UNDER 37 CFR 1.102(c)(1)
:

Attorney Docket No. 2750-008

This is a decision on the electronic petition under 37 CFR 1.102 (c)(1) ,filed 15-MAY-2008 to make the above-identified application special based on applicant's age as set forth in MPEP § 708.02, Section IV.

The petition is **GRANTED**.

A grantable petition to make an application special under 37 CFR 1.102(c)(1), MPEP § 708.02, Section IV: Applicant's Age must include a statement by applicant or a registered practitioner having evidence that applicant is at least 65 years of age. No fee is required.

Accordingly, the above-identified application has been accorded “special” status and will be taken up for action by the examiner upon the completion of all pre-examination processing.

Telephone inquires concerning this electronic decision should be directed to the Electronic Business Center at 866-217-9197.

All other inquires concerning either the examination or status of the application should be directed to the Technology Center.

UNITED STATES PATENT AND TRADEMARK OFFICE

UNITED STATES DEPARTMENT OF COMMERCE
United States Patent and Trademark Office
Address: COMMISSIONER FOR PATENTS
P.O. Box 1450
Alexandria, Virginia 22313-1450
www.uspto.gov

Mary M. Lee
MARY M LEE, P.C.
1300 E. NINTH STREET
SUITE 4
EDMOND, OK 73034-5760

Mail Date: 04/20/2010

Applicant	: Clarence D. Deal	: DECISION ON REQUEST FOR
Patent Number	: 7615894	: RECALCULATION of PATENT
Issue Date	: 11/10/2009	: TERM ADJUSTMENT IN VIEW
Appliction No	: 12/118,150	: OF WYETH AND NOTICE OF INTENT TO
Filed	: 05/09/2008	: ISSUE CERTIFICATE OF CORRECTION
		:

The Request for Recalculation is **GRANTED** to the extent indicated.

The patent term adjustment has been determined to be **0** days. The USPTO will *sua sponte* issue a certificate of correction reflecting the amount of PTA days determined by the recalculation.

Prior to the issuance of the certificate of correction, the USPTO will afford patentee an opportunity to be heard and request reconsideration. Accordingly, patentee has **one month or thirty (30) days**, whichever is longer, to file a request for reconsideration of this patent term adjustment calculation. See 35 U.S.C. 154(b)(3)(B)(ii) and 37 CFR 1.322(a)(4). No extensions of time will be granted under 37 CFR 1.136.

Patentee should use document code PET.OP if electronically filing a request for reconsideration of this patent term adjustment calculation. The patentee must also include the information required by 37 CFR 1.705(b)(2) and the fee required by 37 CFR 1.18(e). If patentee does not file a timely request for reconsideration of this patent term adjustment calculation including the information required by 37 CFR 1.705(b)(2) and the fee required by 37 CFR 1.18(e), the USPTO will issue a certificate of correction reflecting the PTA determination noted above.

Patentee should be aware that in order to preserve the right to review in the United States District Court for the District of Columbia of the USPTO patent term adjustment determination, patentee must ensure that he or she also take the steps required under 35 U.S.C. 154(b)(4)(A) in a timely manner. Nothing in the request for recalculation should be construed as providing an alternative time frame for commencing a civil action under 35 U.S.C. 154(b)(4)(A).

Any questions concerning this decision should be directed to the Office of Patent Legal Administration at 571-272-7702.

UNITED STATES PATENT AND TRADEMARK OFFICE

UNITED STATES DEPARTMENT OF COMMERCE
United States Patent and Trademark Office
Address: COMMISSIONER FOR PATENTS
P.O. Box 1450
Alexandria, Virginia 22313-1450
www.uspto.gov

APPLICATION NO.	FILING DATE	FIRST NAMED INVENTOR	ATTORNEY DOCKET NO.	CONFIRMATION NO.
12/118,154	05/09/2008	Sulahian Diko	8299.051	1463

28410 7590 06/20/2008
BERENATO, WHITE & STAVISH, LLC
6550 ROCK SPRING DRIVE
SUITE 240
BETHESDA, MD 20817

EXAMINER

ART UNIT	PAPER NUMBER
3617	

MAIL DATE	DELIVERY MODE
06/20/2008	PAPER

Please find below and/or attached an Office communication concerning this application or proceeding.

The time period for reply, if any, is set in the attached communication.

UNITED STATES PATENT AND TRADEMARK OFFICE

Commissioner for Patents
United States Patent and Trademark Office
P.O. Box 1450
Alexandria, VA 22313-1450
www.uspto.gov

MAILED
FROM DIRECTORS OFFICE

JUN 19 2008

TECHNOLOGY CENTER 3600

Berenato, White & Stavish, LLC
6550 Rock Spring Drive
Suite 240
Bethesda, MD 20817

In re application of
Sulahian Diko
Application No. 12/118,154
Filed: May 9, 2008
For: ADJUSTABLE WHEEL ASSEMBLY

: **DECISION ON PETITION**
: **TO MAKE SPECIAL FOR**
: **NEW APPLICATION**
: **UNDER 37 CFR 1.102**

This is a decision on the petition filed on May 9, 2008 to make the above-identified application special for accelerated examination procedure under 37 C.F.R. § 1.102(d).

The petition to make the application special is **DISMISSED**.

REGULATION AND PRACTICE

A grantable petition to make special under 37 C.F.R. § 1.102(d) and pursuant to the "Change to Practice for Petitions in Patent Applications to Make Special and for Accelerated Examination" published in the Federal Register on June 26, 2006 (71 Fed. Reg. 36323), must satisfy the following conditions:

I. Conditions Regarding the Application:

1. the application must be a non-reissue utility or design application filed under 37 CFR 1.111(a);

2. the application, the petition and the required fees must be filed electronically using the USPTO's electronic filing system (EFS), or EFS-web; if not filed electronically, a statement asserting that EFS and EFS-web were not available during the normal business hours.

3. at the time of filing, the application must be complete under 37 CFR 1.51 and in condition for examination;

4. the application must contain three or fewer independent claims and twenty or fewer total claims and the claims must be directed to a single invention.

II. Conditions Regarding the Petition:

The petition must:

1. be filed with the application;

2. include a statement that applicant agrees not to separately argue the patentability of any independent claim during any appeal in the application;

3. include a statement that applicant agrees to make an election without traverse in a telephone interview.

4. include a statement that applicant agrees to conduct such an interview when requested by the examiner.

5. include a statement, made based on a good faith belief, that a preexamination search in compliance with the following requirements, was conducted, including an identification of the field of search by United States class and subclass, where applicable, and for database searches, the search logic or chemical structure or sequence used as a query, the name of the file(s) searched and the database service, and the date of the search.

The preexamination search must:

5.1 involve U.S. patents and patent application publications, foreign patent documents, and non-patent literature, unless the applicant can justify with reasonable certainty that no references more pertinent than those already identified are likely to be found in the eliminated sources and includes such a justification with this statement;

5.2. be directed to the claimed invention and encompass all of the features of the claims, giving the claims the broadest reasonable expectation;

5.3. encompass the disclosed features that may be claimed.

6. must provide in support of the petition an accelerated examination support document.

An accelerated examination support document must include:

6.1. an information disclosure statement (IDS) in compliance with 37 CFR 1.98 citing each reference deemed most closely related to the subject matter of each of the claims;

6.2. an identification of all the limitations in the claims that are disclosed by the reference specifying where the limitation is disclosed in the cited reference;

6.3. a detailed explanation of how each of the claims are patentable over the references cited with particularity required by 37 CFR 1.111(b) and (c);

6.4. a concise statement of the utility of the invention as defined in each of the independent claims (unless the application is a design application);

6.5. a showing of where each limitation of the claims finds support under 35 USC 112, first paragraph, in the written description of the specification. If applicable, the showing must also identify: (1) each means- (or step) plus-function claim element that invokes consideration under 35 UDC 112, sixth paragraph; and (2) the structure, material, or acts in the specification that corresponds to each means- (or step) plus-function claim element that invokes consideration under 35 UDC 112, sixth paragraph; if the application claims the benefit of one or more applications under title 35, United States Code, the showing must also include where each limitation of the claims finds support under 35 USC 112, first paragraph, in each such application in which such supports exists;

6.6. an identification of any cited references that may be disqualified under 35 USC 103(c).

REVIEW OF FACTS

The petition in this case fails to comply with conditions II.5.2, and II.6.3, above.

As to condition II.5.2, the petition lacks an indication of a preexamination search that encompasses all of the features of the claims. Specifically, with respect to the required text search of the US Patents database, the search logic used by the applicant does not appear to have adequately directed search terms to cover the claimed limitations and thus may not have located all of the most pertinent art. Search logic encompassing the "broadest reasonable interpretation" of the claimed invention is required. The USPTO website has an example of the proper manner of performing and documenting a preexamination search for Accelerated Examination petitions at: http://www.uspto.gov/web/patents/accelerated/. Additionally, an example of additional search terms are provided below:

((((disc or disk) adj wheel) and cover and spoke) or ((full adj face adj (disc or disk) adj wheel) and cover and spoke))

The sample of search terms are not meant to be the sole search terms that can or should be employed in this application, but is meant solely as an example for applicant's assistance. The same additions shown above for the text search can also be used in the search of foreign databases and NPL search.

As to condition II.6.3, there is not a satisfactory detailed explanation of claim patentability over each of the references. The explanation needs to specify how each of the claims are patentable over each of the cited references, which includes the need to specify whether each of the dependent claims are separately patentable beyond the limitations contained in the independent claims, and if so how, or a statement made that the dependent claims are not separately patentable. Also, for claims having a portion of their limitations taught, identifying specifically which limitations make those claims patentable is needed. Specifically, it is noted that claims 8-9 are not included in the Detailed Explanation of Patentability. Also, at least some of the dependent claims appear to have at least some of their limitations admittedly taught by the cited prior art, yet have the entirety of the claims recited in explaining patentability. In addition, any indication of patentability over the prior art references needs to take in to account any distinctions seen as being obvious over any single or a combination of cited references.

The USPTO website has an example of the proper manner of documenting limitations taught by cited art, and the manner of explaining claim patentability over the references, for an Accelerated Examination Support Document at: http://www.uspto.gov/web/patents/accelerated/.

Therefore, the petition fails to meet the required conditions to be accorded special status under the accelerated examination procedure.

DECISION

For the above-stated reasons, the petition is **DISMISSED**. The application will therefore be taken up by the examiner for action in its regular turn.

Petitioner is given a single opportunity to perfect the petition. Any request for reconsideration of this decision must be submitted within 1 (one) month or 30 (thirty) days, whichever is longer, (no extension of time under 37 CFR 1.136(a)) from the date of this decision in order to be considered timely. Any request for reconsideration must address the deficiencies indicated above.

Petitioner is reminded that, upon granting of the special status of the application on request for reconsideration, the application will be processed expeditiously. However, due to the dismissal of the instant petition, examination may not be completed within twelve months of the filing date of the application.

Any inquiry regarding this decision should be directed to Quality Assurance Specialist Steven N. Meyers, at (571) 272-6611.

Steven N. Meyers,
Quality Assurance Specialist
Technology Center 3600

Sm/sm: 6/15/08

UNITED STATES PATENT AND TRADEMARK OFFICE

UNITED STATES DEPARTMENT OF COMMERCE
United States Patent and Trademark Office
Address: COMMISSIONER FOR PATENTS
P.O. Box 1450
Alexandria, Virginia 22313-1450
www.uspto.gov

APPLICATION NO.	FILING DATE	FIRST NAMED INVENTOR	ATTORNEY DOCKET NO.	CONFIRMATION NO.
12/118,154	05/09/2008	Sulahian Diko	8299.051	1463

28410 7590 07/23/2008
BERENATO, WHITE & STAVISH, LLC
6550 ROCK SPRING DRIVE
SUITE 240
BETHESDA, MD 20817

EXAMINER
MORANO IV, SAMUEL J

ART UNIT	PAPER NUMBER
3617	

MAIL DATE	DELIVERY MODE
07/23/2008	PAPER

Please find below and/or attached an Office communication concerning this application or proceeding.

The time period for reply, if any, is set in the attached communication.

UNITED STATES PATENT AND TRADEMARK OFFICE

Commissioner for Patents
United States Patent and Trademark Office
P.O. Box 1450
Alexandria, VA 22313-1450
www.uspto.gov

MAILED
FROM DIRECTORS OFFICE

JUL 22 2008

TECHNOLOGY CENTER 3600

Berenato, White & Stavish, LLC
6550 Rock Spring Drive
Suite 240
Bethesda, MD 20817

In re application of
Sulahian Diko
Application No. 12/118,154
Filed: May 9, 2008
For: ADJUSTABLE WHEEL ASSEMBLY

: **DECISION ON PETITION**
: **TO MAKE SPECIAL FOR**
: **NEW APPLICATION**
: **UNDER 37 CFR 1.102**

This is a decision on the renewed petition filed on July 15, 2008 to make the above-identified application special for accelerated examination procedure under 37 C.F.R. § 1.102(d).

The petition to make the application special is **DENIED**.

A petition to make special was filed in the above-identified application under 37 CFR 1.102(d) on May 9, 2008. That petition was dismissed in a decision mailed June 20, 2008 wherein a non-extendible period of 1 (one) month or 30 (thirty) days, whichever was longer, was set to request reconsideration.

The reason for the dismissal was an inadequate search and an inadequate Support document (AESD).

Concerning the original Search Document, the text search of the U.S. Patents database was deemed to be incomplete, as the petition lacked sufficient search logic encompassing the broadest reasonable interpretation of the claimed invention. Applicant's renewed petition includes a listing of a completed text search that is acceptable.

Concerning the original AESD, the following was indicated in the above-noted dismissal, "As for claims having a portion of their limitations taught, identifying specifically which limitations make those claims patentable is needed. Specifically, it is noted that claims 8-9 are not included in the Detailed Explanation of Patentability. **Also, at least some of the dependent claims appear to have at least some of their limitations admittedly taught by the cited prior art, yet have the entirety of the claims recited in explaining patentability.** In addition, any indication of patentability over the prior art references needs to take in to account any distinctions seen as being obvious

over any single or a combination of cited references". Although the treatment of missing claims 8-9 is now acceptable, applicant has not addressed the remaining above-noted deficiency (in bold). For example, at least claims 6 & 7 recite the entirety of each claim as being the basis for their patentability, however, numerous cited references teach at least a portion of the claimed limitations. Applicant's AESD submitted with the renewed petition fails to provide any changes from the Detailed Explanation of Patentability submitted with the original petition for the above-noted claims. As such, this deficiency remains uncorrected.

For the above stated reason, the petition is denied. The application will therefore be taken up by the examiner for action in its regular turn.

Petitioner is reminded that a single opportunity to perfect the original petition is given. Therefore, further petitions for accelerated examination in this application will not be entertained.

Any inquiry regarding this decision should be directed to Quality Assurance Specialist Steven N. Meyers at (571) 272-6611.

Steven N. Meyers
Quality Assurance Specialist
Technology Center 3600

snm/snm 7/22/08

UNITED STATES PATENT AND TRADEMARK OFFICE

UNITED STATES DEPARTMENT OF COMMERCE
United States Patent and Trademark Office
Address: COMMISSIONER FOR PATENTS
P.O. Box 1450
Alexandria, Virginia 22313-1450
www.uspto.gov

GAUTHIER & CONNORS, LLP
225 FRANKLIN STREET
SUITE 2300
BOSTON, MA 02110

Mail Date: 04/21/2010

Applicant	: Eric A. Dauler	: DECISION ON REQUEST FOR
Patent Number	: 7638751	: RECALCULATION of PATENT
Issue Date	: 12/29/2009	: TERM ADJUSTMENT IN VIEW
Appliction No	: 12/118,187	: OF WYETH AND NOTICE OF INTENT TO
Filed	: 05/09/2008	: ISSUE CERTIFICATE OF CORRECTION
		:

The Request for Recalculation is **GRANTED** to the extent indicated.

The patent term adjustment has been determined to be **0** days. The USPTO will *sua sponte* issue a certificate of correction reflecting the amount of PTA days determined by the recalculation.

Prior to the issuance of the certificate of correction, the USPTO will afford patentee an opportunity to be heard and request reconsideration. Accordingly, patentee has **one month or thirty (30) days**, whichever is longer, to file a request for reconsideration of this patent term adjustment calculation. See 35 U.S.C. 154(b)(3)(B)(ii) and 37 CFR 1.322(a)(4). No extensions of time will be granted under 37 CFR 1.136.

Patentee should use document code PET.OP if electronically filing a request for reconsideration of this patent term adjustment calculation. The patentee must also include the information required by 37 CFR 1.705(b)(2) and the fee required by 37 CFR 1.18(e). If patentee does not file a timely request for reconsideration of this patent term adjustment calculation including the information required by 37 CFR 1.705(b)(2) and the fee required by 37 CFR 1.18(e), the USPTO will issue a certificate of correction reflecting the PTA determination noted above.

Patentee should be aware that in order to preserve the right to review in the United States District Court for the District of Columbia of the USPTO patent term adjustment determination, patentee must ensure that he or she also take the steps required under 35 U.S.C. 154(b)(4)(A) in a timely manner. Nothing in the request for recalculation should be construed as providing an alternative time frame for commencing a civil action under 35 U.S.C. 154(b)(4)(A).

Any questions concerning this decision should be directed to the Office of Patent Legal Administration at 571-272-7702.

UNITED STATES PATENT AND TRADEMARK OFFICE

Commissioner for Patents
United States Patent and Trademark Office
P.O. Box 1450
Alexandria, VA 22313-1450
www.uspto.gov

HARMAN-BRINKS HOFER CHICAGO
Brinks Hofer Gilson & Lione
P.O. Box 10395
Chicago, IL 60610

COPY MAILED

JUL 2 7 2009

OFFICE OF PETITIONS

In re Application of	:	
Gerhard Uwe Schmidt, et al.	:	
Application No. 12/118,205	:	DECISION ON PETITION
Filed: May 5, 2008	:	TO WITHDRAW
Attorney Docket No. 11336-1865 (P07110US)	:	FROM RECORD
	:	

This is a decision on the Request to Withdraw as attorney or agent of record under 37 C.F.R. § 1.36(b), filed June 15, 2009.

The request is **APPROVED**.

A grantable request to withdraw as attorney/agent of record must be signed by every attorney/agent seeking to withdraw or contain a clear indication that one attorney is signing on behalf of another/others. A request to withdraw will not be approved unless at least 30 (thirty) days would remain between the date of approval and the later of the expiration date of a time to file a response or the expiration date of the maximum time period which can be extended under 37 C.F.R. § 1.136(a).

The request was signed by John F. Nethery on behalf of all attorneys of record. All attorneys/agents have been withdrawn. Applicant is reminded that there is no attorney of record at this time.

The request to change the correspondence of record is not acceptable as the requested correspondence address is not that of: (1) the first named signing inventor; or (2) an intervening assignee of the entire interest under 37 C.F.R 3.71. All future communications from the Office will be directed to the first named signing inventor at the first copied address below until otherwise properly notified by the applicant.

Telephone inquiries concerning this decision should be directed to Terri Williams at 571-272-2991.

Terri Williams
Petitions Examiner
Office of Petitions

cc: **Gerhard Uwe Schmidt**
Harthauser Strasse 37
Ulm, 89081
Germany

cc: **Robert P. Hart, Esq.**
Harman International Industries, Incorporated
8500 Balboa Boulevard
Northridge, CA 91329

UNITED STATES PATENT AND TRADEMARK OFFICE

UNITED STATES DEPARTMENT OF COMMERCE
United States Patent and Trademark Office
Address: COMMISSIONER FOR PATENTS
P.O. Box 1450
Alexandria, Virginia 22313-1450
www.uspto.gov

APPLICATION NUMBER	FILING OR 371(C) DATE	FIRST NAMED APPLICANT	ATTY. DOCKET NO./TITLE
12/118,205	05/09/2008	Gerhard Uwe Schmidt	11336-1865 (P07110US)

CONFIRMATION NO. 1570

POWER OF ATTORNEY NOTICE

81166
HARMAN - BRINKS HOFER CHICAGO
Brinks Hofer Gilson & Lione
P.O. Box 10395
Chicago, IL 60610

OC000000037020830

Date Mailed: 07/21/2009

NOTICE REGARDING CHANGE OF POWER OF ATTORNEY

This is in response to the Power of Attorney filed 06/15/2009.

- The withdrawal as attorney in this application has been accepted. Future correspondence will be mailed to the new address of record. 37 CFR 1.33.

/tswilliams/

Office of Data Management, Application Assistance Unit (571) 272-4000, or (571) 272-4200, or 1-888-786-0101

UNITED STATES PATENT AND TRADEMARK OFFICE

UNITED STATES DEPARTMENT OF COMMERCE
United States Patent and Trademark Office
Address: COMMISSIONER FOR PATENTS
P.O. Box 1450
Alexandria, Virginia 22313-1450
www.uspto.gov

APPLICATION NO.	FILING DATE	FIRST NAMED INVENTOR	ATTORNEY DOCKET NO.	CONFIRMATION NO.
12/118,206	05/09/2008	Debabrata Dash	ARC920070042US2	1573

67232 7590 07/18/2008
CANTOR COLBURN, LLP - IBM ARC DIVISION
20 Church Street
22nd Floor
Hartford, CT 06103

EXAMINER
ALAM, HOSAIN T

ART UNIT	PAPER NUMBER
2166	

MAIL DATE	DELIVERY MODE
07/18/2008	PAPER

Please find below and/or attached an Office communication concerning this application or proceeding.

The time period for reply, if any, is set in the attached communication.

UNITED STATES PATENT AND TRADEMARK OFFICE

Commissioner for Patents
United States Patent and Trademark Office
P.O. Box 1450
Alexandria, VA 22313-1450
www.uspto.gov

M. Brad Lawrence
CANTOR COLBURN, LLP
IBM ARC DIVISION
20 Church Street, 22nd Floor
Hartford, CT 06103

In re Application of: DASH et al Serial No.: 12/118,206 Filed: May 09, 2008 Attorney Docket: ARC920070042US2 Title: DISCOVERING INTERESTINGNESS IN FACETED SEARCH	DECISION ON PETITION TO MAKE SPECIAL FOR NEW APPLICATION UNDER 37 C.F.R. § 1.102 & M.P.E.P. § 708.02

This is a decision on the petition filed on May 07, 2008 to make the above-identified application special for accelerated examination procedure under 37 C.F.R. § 1.102(d).

The petition to make the application special is **GRANTED**.

The application is eligible for accelerated examination and the petition complies with the conditions for granting the application special status pursuant to the "Change to Practice for Petitions in Patent Applications to Make Special and for Accelerated Examination" published June 26, 2006, in the Federal Register. (71 Fed. Reg. 36323).

The prosecution of the instant application will be conducted expeditiously according to the following guidelines.

1. The application will be docketed to an examiner and taken up for action within two weeks of the date of this decision.

2. Restriction Practice:
   If the examiner determines that the claims are not directed to a single invention, a telephone request to elect one single invention will be made pursuant to MPEP 812.01. As a prerequisite to the grant of this petition, the applicant has agreed to make an oral election, by telephone, without traverse. If the applicant refuses to make an election without traverse, or the examiner cannot reach the applicant after a reasonable effort, the examiner will treat the first claimed invention (invention defined by claim 1) as having being constructively elected without traverse for examination.

3. Office action:
   If it is determined that, after appropriate consultation, there is a potential rejection or any other issue to be addressed, the examiner will telephone the applicant and arrange an interview to discuss and resolve the issue. An Office action, other than a Notice of Allowance and Fee(s) Due (Notice of Allowance), will not be issued unless either: 1) an interview was conducted but did not result in agreed to action that places the application in condition for allowance, or, 2) a determination is made that an interview would be unlikely to result in the application being placed in condition for allowance, and 3) an internal conference has been held to review any rejection of any claim.

4. Time for Reply:
   An Office action other than a Notice of Allowance or a final Office action will set a shortened statutory period of one month or thirty days, whichever is longer, for reply with no extension of time available under 37 CFR 1.136(a). Failure to timely file a reply within this non-extendible period for reply will result in the abandonment of the application.

5. Reply by Applicant:
   A timely reply to an Office action other than the Notice of Allowance must be submitted electronically via EFS or EFS-web and limited to addressing the rejections, objections and requirement made. Any amendment that attempts to: 1) add claims which would result in more than three pending independent claims or more than twenty pending total claims; 2) present claims not encompassed by the pre-examination search or an updated accelerated examination support document; or 3) present claims that are directed a non-elected invention or an invention other than that previously claimed and examined in the application, will be treated as not fully responsive and will not be entered.

   For any amendment to the claims (including any new claim) that is not encompassed by the accelerated examination support document, applicant must provide an updated accelerated examination support document that encompasses the amended or new claims at the time of filing of the amendment.

   To proceed expeditiously with the examination, it is recommended that a reply with amendments made to any claim or with any new claim being added be accompanied by an updated accelerated examination support document or a statement explaining how the amended or new claim is supported by the original accelerated examination support document.

6. Information Disclosure Statement (IDS):
   Any IDS filed during prosecution must be submitted electronically via EFS or EFS-web, accompanied by an updated accelerated examination support document, and be in compliance with 37 CFR 1.97 and 1.98.

7. Post-Allowance Processing:
   To expedite processing of the allowed application into a patent, the applicant must: 1) pay the required fees within one month of the date of the Notice of Allowance, and 2) not file any post allowance papers not required by the Office. In no event may the issue fee be paid and accepted later than three months from the date of the Notice of Allowance.

8. After-Final and Appeal Procedures:
   To expedite prosecution, after receiving the final Office action, applicant must: 1) promptly file a notice of appeal, an appeal brief and appeal fees; and 2) not request a pre-appeal brief conference.

   Any amendment, affidavit or other evidence filed after final Office action must comply with applicable rules and the requirements outlined in numbered paragraphs 5 and 6 above.

   On appeal, the application will proceed according to normal appeal procedures. After appeal, the application will again be treated special.

9. Proceedings Outside the Normal Examination Process:
   If the application becomes involved in a proceeding that is outside the normal examination process (e.g., a secrecy order, national security review, interference proceeding, petitions under 37 CFR 1.181, 182 or 183), the application will be treated special before and after such proceeding.

10. Final Disposition:
    The twelve month goal of this accelerated examination procedure ends with a final disposition. The mailing of a final Office action, a Notice of Allowance, the filing of a Notice of Appeal, or the filing of a Request for Continued Examination (RCE) is the final disposition.

If, during prosecution, a paper is not filed electronically using EFS-web, a reply is filed but is not fully responsive, the application is involved in an appeal, or a proceeding outside normal examination process, the application will still be examined expeditiously, however, the final disposition may occur more than twelve months from the filing of the application.

Any inquiry concerning this decision should be directed to the undersigned whose telephone number is (571) 272-3613.

Vincent N. Trans, SPRE/QAS
Technology Center 2100
Computer Architecture, Software, and
Information Security

UNITED STATES PATENT AND TRADEMARK OFFICE

UNITED STATES DEPARTMENT OF COMMERCE
United States Patent and Trademark Office
Address: COMMISSIONER FOR PATENTS
P.O. Box 1450
Alexandria, Virginia 22313-1450
www.uspto.gov

KENYON & KENYON LLP
1500 K STREET N.W.
SUITE 700
WASHINGTON, DC 20005

Mail Date: 04/21/2010

Applicant	: Russell Francis Durgin	: DECISION ON REQUEST FOR
Patent Number	: 7648501	: RECALCULATION of PATENT
Issue Date	: 01/19/2010	: TERM ADJUSTMENT IN VIEW
Appliction No	: 12/118,220	: OF WYETH AND NOTICE OF INTENT TO
Filed	: 05/09/2008	: ISSUE CERTIFICATE OF CORRECTION
		:

The Request for Recalculation is **GRANTED** to the extent indicated.

The patent term adjustment has been determined to be **0** days. The USPTO will *sua sponte* issue a certificate of correction reflecting the amount of PTA days determined by the recalculation.

Prior to the issuance of the certificate of correction, the USPTO will afford patentee an opportunity to be heard and request reconsideration. Accordingly, patentee has **one month or thirty (30) days**, whichever is longer, to file a request for reconsideration of this patent term adjustment calculation. See 35 U.S.C. 154(b)(3)(B)(ii) and 37 CFR 1.322(a)(4). No extensions of time will be granted under 37 CFR 1.136.

Patentee should use document code PET.OP if electronically filing a request for reconsideration of this patent term adjustment calculation. The patentee must also include the information required by 37 CFR 1.705(b)(2) and the fee required by 37 CFR 1.18(e). If patentee does not file a timely request for reconsideration of this patent term adjustment calculation including the information required by 37 CFR 1.705(b)(2) and the fee required by 37 CFR 1.18(e), the USPTO will issue a certificate of correction reflecting the PTA determination noted above.

Patentee should be aware that in order to preserve the right to review in the United States District Court for the District of Columbia of the USPTO patent term adjustment determination, patentee must ensure that he or she also take the steps required under 35 U.S.C. 154(b)(4)(A) in a timely manner. Nothing in the request for recalculation should be construed as providing an alternative time frame for commencing a civil action under 35 U.S.C. 154(b)(4)(A).

Any questions concerning this decision should be directed to the Office of Patent Legal Administration at 571-272-7702.

SPE RESPONSE FOR CERTIFICATE OF CORRECTION

Paper No.: _____

DATE : 07/02/10

TO SPE OF : ART UNIT 3739

SUBJECT : Request for Certificate of Correction for Appl. No.: 12118220 Patent No.: 7648501

Please respond to this request for a certificate of correction within 7 days.

FOR IFW FILES:

Please review the requested changes/corrections as shown in the **COCIN** document(s) in the IFW application image. No new matter should be introduced, nor should the scope or meaning of the claims be changed.

Please complete the response (see below) and forward the completed response to scanning using document code **COCX**.

FOR PAPER FILES:

Please review the requested changes/corrections as shown in the attached certificate of correction. Please complete this form (see below) and forward it with the file to:

Certificates of Correction Branch (C of C)
Randolph Square 9D40-D
Palm Location 7580
You can fax the Directors/SPE response to 571-270-9990

Lamonte Newsome
Certificates of Correction Branch
703-756-1574

Thank You For Your Assistance

The request for issuing the above-identified correction(s) is hereby:
Note your decision on the appropriate box.

- ☐ **Approved** — **All** changes apply.
- X **Approved in Part** — Specify below which changes **do not** apply.
- ☐ **Denied** — State the reasons for denial below.

Comments: The corrections are accurate except for the column 5, lines 40 and 48 corrections. Those corrections should be directed to line 38 and line 46, respectively. /Linda C.M. Dvorak/ _3739__

SPE **Art Unit**

UNITED STATES PATENT AND TRADEMARK OFFICE

COMMISSIONER FOR PATENTS
UNITED STATES PATENT AND TRADEMARK OFFICE
P.O. BOX 1450
ALEXANDRIA, VA 22313-1450
www.uspto.gov

Dechert LLP
P.O. Box 390460
Mountain View, CA 94039-0460

MAILED

SEP 29 2009

OFFICE OF PETITIONS

In re Application of	:	
Maj Hedtjam	:	
Application No. 12/118,271	:	DECISION ON PETITION
Filed: May 9, 2008	:	TO WITHDRAW
Attorney Docket No. 366929-036US (398346)	:	FROM RECORD
	:	

This is a decision on the Request to Withdraw as attorney or agent of record under 37 C.F.R. § 1.36(b), filed August 28, 2009.

The request is **moot because a revocation of power of attorney has been filed**.

A review of the file record indicates that the power of attorney to Dechert, LLP has been revoked by the assignee of the patent application on September 24, 2009. Accordingly, the request to withdraw under 37 C.F.R. § 1.36(b) is moot.

All future communications from the Office will continue to be directed to the below listed until otherwise notified by applicant.

Telephone inquires concerning this decision should be directed to Kimberly Inabinet at 571-272-4618.

/Kimberly Inabinet/

Kimberly Inabinet
Petitions Examiner
Office of Petitions

cc: Lucas & Mercanti, LLP
475 Park Avenue South
15th Floor
New York, NY 10016

UNITED STATES PATENT AND TRADEMARK OFFICE

UNITED STATES DEPARTMENT OF COMMERCE
United States Patent and Trademark Office
Address: COMMISSIONER FOR PATENTS
P.O. Box 1450
Alexandria, Virginia 22313-1450
www.uspto.gov

APPLICATION NUMBER	FILING OR 371(C) DATE	FIRST NAMED APPLICANT	ATTY. DOCKET NO./TITLE
12/118,271	05/09/2008	Maj Hedtjarn	366929-036US (398346)

CONFIRMATION NO. 1701

POWER OF ATTORNEY NOTICE

37509
DECHERT LLP
P.O. BOX 390460
MOUNTAIN VIEW, CA 94039-0460

OC000000038040774

Date Mailed: 09/30/2009

NOTICE REGARDING CHANGE OF POWER OF ATTORNEY

This is in response to the Power of Attorney filed 09/24/2009.

- The Power of Attorney to you in this application has been revoked by the assignee who has intervened as provided by 37 CFR 3.71. Future correspondence will be mailed to the new address of record(37 CFR 1.33).

/mteklemichael/

Office of Data Management, Application Assistance Unit (571) 272-4000, or (571) 272-4200, or 1-888-786-0101

UNITED STATES PATENT AND TRADEMARK OFFICE

Commissioner for Patents
United States Patent and Trademark Office
P.O. Box 1450
Alexandria, VA 22313-1450
www.uspto.gov

YAHOO C/O MOFO PALO ALTO
755 PAGE MILL ROAD
PALO ALTO, CA 94304

MAILED

MAY 24 2010

OFFICE OF PETITIONS

In re Application of Peter Mika, et. al. Application No. 12/118,339 Filed: May 9, 2008 Attorney Docket No. 085804-715500	: : : : :	DECISION ON PETITION TO WITHDRAW FROM RECORD

This is a decision on the Request to Withdraw as attorney or agent of record under 37 CFR §§ 1.36(b) or 37 CFR 10.40, filed March 25, 2010.

The request is **NOT APPROVED**.

It is noted that a power of attorney was filed by the assignee on April 19, 2010, which revoked any previous power of attorney or authorization of agent. Therefore, the request to withdraw under 37 CFR §§ 1.36(b) or 10.40 is moot.

All future communications from the Office will be directed to the below-listed address until otherwise notified by applicant.

This application file is being referred to Technology Center Art Unit 2100 for examination in due course.

Telephone inquires concerning this decision should be directed to the undersigned at (571) 272-3226.

Andrea Smith
Petitions Examiner
Office of Petitions

cc: YAHOO! INC. C/O GREENBERG TRAURIG, LLP
MET LIFE BUILDING
200 PARK AVENUE
NEW YORK, NY 10166

UNITED STATES PATENT AND TRADEMARK OFFICE

COMMISSIONER FOR PATENTS
UNITED STATES PATENT AND TRADEMARK OFFICE
P.O. BOX 1450
ALEXANDRIA, VA 22313-1450
www.uspto.gov

TEXAS INSTRUMENTS INCORPORATED
P O BOX 655474, M/S 3999
DALLAS TX 75265

COPY MAILED

MAR 24 2009

OFFICE OF PETITIONS

In re Application of :
Tanaka :
Application No. 12/118,406 : DECISION ON PETITION
Filed: May 9, 2008 :
Attorney Docket No. TI-64247 :

This is a decision on the petition under the unintentional provisions of 37 CFR 1.137(b), filed March 11, 2009, to revive the above-identified application.

The petition is **GRANTED**.

The application became abandoned July 30, 2008 for failure to reply in a timely manner to the Notice to File Missing Parts of Nonprovisional Application (Notice), mailed May 29, 2008. The Notice set a period for reply of two (2) months from the mail date of the Notice. No extension of time under the provisions of 37 CFR 1.136(a) was obtained. Notice of Abandonment was mailed February 5, 2009.

The petition satisfies the requirements of 37 CFR 1.137(b) in that petitioner has supplied (1) the required reply, (2) the required petition fee, and (3) a proper statement of unintentional delay.

Telephone inquiries concerning this decision should be directed to the undersigned at 571-272-3205.

This application is being referred to the Office of Patent Application Processing for further processing.

/ALESIA M. BROWN/
Alesia M. Brown
Petitions Attorney
Office of Petitions

UNITED STATES PATENT AND TRADEMARK OFFICE

UNITED STATES DEPARTMENT OF COMMERCE
United States Patent and Trademark Office
Address: COMMISSIONER FOR PATENTS
P.O. Box 1450
Alexandria, Virginia 22313-1450
www.uspto.gov

APPLICATION NO.	FILING DATE	FIRST NAMED INVENTOR	ATTORNEY DOCKET NO.	CONFIRMATION NO.
12/118,441	05/09/2008	Sololmon Assefa	YOR920070511US1	1011

48915 7590 07/18/2008
CANTOR COLBURN LLP-IBM YORKTOWN
20 Church Street
22nd Floor
Hartford, CT 06103

EXAMINER

ART UNIT	PAPER NUMBER
2827	

MAIL DATE	DELIVERY MODE
07/18/2008	PAPER

Please find below and/or attached an Office communication concerning this application or proceeding.

The time period for reply, if any, is set in the attached communication.

UNITED STATES PATENT AND TRADEMARK OFFICE

Commissioner for Patents
United States Patent and Trademark Office
P.O. Box 1450
Alexandria, VA 22313-1450
www.uspto.gov

CANTOR COLBURN LLP-IBM YORKTOWN
20 Church Street, 22nd Floor
Hartford, CT 06103

In re Application of: ASSEFA *et al.* Serial No.: 12/118,441 Filed: May 09, 2008 Docket: **YOR920070511US1** Title: **SYSTEMS INVOLVING SPIN-TRANSFER MAGNETIC RANDOM ACCESS MEMORY**	DECISION ON PETITION TO MAKE SPECIAL FOR NEW APPLICATION UNDER 37 C.F.R. § 1.102 & M.P.E.P. § 708.02

This is a decision on the petition filed on May 09, 2008, to make the above-identified application special for accelerated examination procedure under 37 C.F.R. § 1.102(d).

The petition to make the application special is GRANTED.

The application is eligible for accelerated examination and the petition complies with the conditions for granting the application special status pursuant to the "Change to Practice for Petitions in Patent Applications to Make Special and for Accelerated Examination" published June 26, 2006, in the Federal Register. (71 Fed. Reg. 36323).

The prosecution of the instant application will be conducted expeditiously according to the following guidelines.

1. The application will be docketed to an examiner and taken up for action within two weeks of the date of this decision.

2. Restriction Practice:
   If the examiner determines that the claims are not directed to a single invention, a telephone request to elect one single invention will be made pursuant to MPEP 812.01. As a prerequisite to the grant of this petition, the applicant has agreed to make an oral election, by telephone, without traverse. If the applicant refuses to make an election without traverse, or the examiner cannot reach the applicant after a reasonable effort, the examiner will treat the first claimed invention (invention defined by claim 1) as having being constructively elected without traverse for examination.

3. Office action:
   If it is determined that, after appropriate consultation, there is a potential rejection or any other issue to be addressed, the examiner will telephone the applicant and arrange an interview to discuss and resolve the issue. An Office action, other than a Notice of Allowance and Fee(s) Due (Notice of Allowance), will not be issued unless either: 1) an interview was conducted but did not result in agreed to action that places the application in condition for allowance, or, 2) a determination is made that an interview would be unlikely to result in the application being placed in condition for allowance, and 3) an internal conference has been held to review any rejection of any claim.

4. Time for Reply:
   An Office action other than a Notice of Allowance or a final Office action will set a shortened statutory period of one month or thirty days, whichever is longer, for reply with no extension of time available under 37 CFR 1.136(a). Failure to timely file a reply within this non-extendible period for reply will result in the abandonment of the application.

5. Reply by Applicant:
   A timely reply to an Office action other than the Notice of Allowance must be submitted electronically via EFS or EFS-web and limited to addressing the rejections, objections and requirement made. Any amendment that attempts to: 1) add claims which would result in more than three pending independent claims or more than twenty pending total claims; 2) present claims not encompassed by the pre-examination search or an updated accelerated examination support document; or 3) present claims that are directed a non-elected invention or an invention other than that previously claimed and examined in the application, will be treated as not fully responsive and will not be entered.

   For any amendment to the claims (including any new claim) that is not encompassed by the accelerated examination support document, applicant must provide an updated accelerated examination support document that encompasses the amended or new claims at the time of filing of the amendment.

   To proceed expeditiously with the examination, it is recommended that a reply with amendments made to any claim or with any new claim being added be accompanied by an updated accelerated examination support document or a statement explaining how the amended or new claim is supported by the original accelerated examination support document.

6. Information Disclosure Statement (IDS):
   Any IDS filed during prosecution must be submitted electronically via EFS or EFS-web, accompanied by an updated accelerated examination support document, and be in compliance with 37 CFR 1.97 and 1.98.

7. Post-Allowance Processing:
   To expedite processing of the allowed application into a patent, the applicant must: 1) pay the required fees within one month of the date of the Notice of Allowance, and 2) not file any post allowance papers not required by the Office. In no event may the issue fee be paid and accepted later than three months from the date of the Notice of Allowance.

8. After-Final and Appeal Procedures:
   To expedite prosecution, after receiving the final Office action, applicant must: 1) promptly file a notice of appeal, an appeal brief and appeal fees; and 2) not request a pre-appeal brief conference.

   Any amendment, affidavit or other evidence filed after final Office action must comply with applicable rules and the requirements outlined in numbered paragraphs 5 and 6 above.

   On appeal, the application will proceed according to normal appeal procedures. After appeal, the application will again be treated special.

9. Proceedings Outside the Normal Examination Process:
   If the application becomes involved in a proceeding that is outside the normal examination process (e.g., a secrecy order, national security review, interference proceeding, petitions under 37 CFR 1.181, 182 or 183), the application will be treated special before and after such proceeding.

10. Final Disposition:
    The twelve month goal of this accelerated examination procedure ends with a final disposition. The mailing of a final Office action, a Notice of Allowance, the filing of a Notice of Appeal, or the filing of a Request for Continued Examination (RCE) is the final disposition.

If, during prosecution, a paper is not filed electronically using EFS-web, a reply is filed but is not fully responsive, the application is involved in an appeal, or a proceeding outside normal examination process, the application will still be examined expeditiously, however, the final disposition may occur more than twelve months from the filing of the application.

Any inquiry regarding this decision should be directed to the undersigned at (571) 272-1594.

Clayton E. LaBalle, T-QAS
Technology Center 2800 - Semiconductors,
Electrical & Optical Systems & Components

UNITED STATES PATENT AND TRADEMARK OFFICE

UNITED STATES DEPARTMENT OF COMMERCE
United States Patent and Trademark Office
Address: COMMISSIONER FOR PATENTS
P.O. Box 1450
Alexandria, Virginia 22313-1450
www.uspto.gov

APPLICATION NO.	FILING DATE	FIRST NAMED INVENTOR	ATTORNEY DOCKET NO.	CONFIRMATION NO.
12/118,496	05/09/2008	Sololmon Assefa	YOR920070651US1	1127

48915 7590 08/28/2008
CANTOR COLBURN LLP-IBM YORKTOWN
20 Church Street
22nd Floor
Hartford, CT 06103

EXAMINER

ART UNIT	PAPER NUMBER
2827	

MAIL DATE	DELIVERY MODE
08/28/2008	PAPER

Please find below and/or attached an Office communication concerning this application or proceeding.

The time period for reply, if any, is set in the attached communication.

UNITED STATES PATENT AND TRADEMARK OFFICE

Commissioner for Patents
United States Patent and Trademark Office
P.O. Box 1450
Alexandria, VA 22313-1450
www.uspto.gov

CANTOR COLBURN LLP - IBM YORKTOWN
20 Church Street
22nd Floor
Hartford, CT 06103

In re Application of:	:	
Solomon Assefa	:	
Serial No.: 12/118,496	:	DECISION ON PETITION TO
Filed: May 9, 2008	:	MAKE SPECIAL FOR NEW
Attorney Docket No.: YOR920070651US1	:	APPLICATION UNDER 37
Title: METHODS INVOLVING RESETTING	:	C.F.R. § 1.102 & M.P.E.P. § 708.2
SPIN-TORQUE MAGNETIC RANDOM	:	
ACCESS MEMORY	:	

This is a decision on the petition filed on May 9, 2008 to make the above-identified application special for accelerated examination procedure under 37 C.F.R. §1.102(d).

The petition to make the application special is GRANTED.

The application is eligible for accelerated examination and the petition complies with the conditions for granting the application special status pursuant to the "Change to Practice for Petitions in Patent Applications to Make Special and for Accelerated Examination" published June 26, 2006, in the Federal Register. (71 Fed. Reg. 36323).

The prosecution of the instant application will be conducted expeditiously according to the following guidelines.

1. The application will be docketed to an examiner and taken up for action within two weeks of the date of this decision.

2. Restriction Practice:
   If the examiner determines that the claims are not directed to a single invention, a telephone request to elect one single invention will be made pursuant to MPEP 812.01. As a prerequisite to the grant of this petition, the applicant has agreed to make an oral election, by telephone, without traverse. If the applicant refuses to make an election without traverse, or the examiner cannot reach the applicant after a reasonable effort, the examiner will treat the first claimed invention (invention defined by claim 1) as having being constructively elected without traverse for examination.

3. Office action:
   If it is determined that, after appropriate consultation, there is a potential rejection or any other issue to be addressed, the examiner will telephone the applicant and arrange an interview to discuss and resolve the issue. An Office action, other than a Notice of Allowance and Fee(s) Due (Notice of Allowance), will not be issued unless either: 1) an interview was conducted but did not result in agreed to action that places the application in condition for allowance, or, 2) a determination is made that an interview would be unlikely to result in the application being placed in condition for allowance, and 3) an internal conference has been held to review any rejection of any claim.

4. Time for Reply:
   An Office action other than a Notice of Allowance or a final Office action will set a shortened statutory period of one month or thirty days, whichever is longer, for reply with no extension of time available under 37 C.F.R. §1.136(a). Failure to timely file a reply within this non-extendible period for reply will result in the abandonment of the application.

5. Reply by Applicant:
   A timely reply to an Office action other than the Notice of Allowance must be submitted electronically via EFS or EFS-web and limited to addressing the rejections, objections and requirement made. Any amendment that attempts to: 1) add claims which would result in more than three pending independent claims or more than twenty pending total claims; 2) present claims not encompassed by the pre-examination search or an updated accelerated examination support document; or 3) present claims that are directed a non-elected invention or an invention other than that previously claimed and examined in the application, will be treated as not fully responsive and will not be entered.

   For any amendment to the claims (including any new claim) that is not encompassed by the accelerated examination support document, applicant must provide an updated accelerated examination support document that encompasses the amended or new claims at the time of filing of the amendment.

   To proceed expeditiously with the examination, it is recommended that a reply with amendments made to any claim or with any new claim being added be accompanied by an updated accelerated examination support document or a statement explaining how the amended or new claim is supported by the original accelerated examination support document.

6. Information Disclosure Statement (IDS):
   Any IDS filed during prosecution must be submitted electronically via EFS or EFS-web, accompanied by an updated accelerated examination support document, and be in compliance with 37 C.F.R. §1.97 and §1.98. mpliance with 37 C.F.R. §1.97 and §1.98.

7. Post-Allowance Processing:
   To expedite processing of the allowed application into a patent, the applicant must: 1) pay the required fees within one month of the date of the Notice of Allowance, and 2) not file any post allowance papers not required by the Office. In no event may the issue fee be paid and accepted later than three months from the date of the Notice of Allowance.

8. After-Final and Appeal Procedures:
   To expedite prosecution, after receiving the final Office action, applicant must: 1) promptly file a notice of appeal, an appeal brief and appeal fees; and 2) not request a pre-appeal brief conference.

   Any amendment, affidavit or other evidence filed after final Office action must comply with applicable rules and the requirements outlined in numbered paragraphs 5 and 6 above.

   On appeal, the application will proceed according to normal appeal procedures. After appeal, the application will again be treated special.

9. Proceedings Outside the Normal Examination Process:
   If the application becomes involved in a proceeding that is outside the normal examination process (e.g., a secrecy order, national security review, interference proceeding, petitions under 37 C.F.R. §1.181, §1.182 or §1.183), the application will be treated special before and after such proceeding.

10. Final Disposition:
    The twelve-month goal of this accelerated examination procedure ends with a final disposition. The mailing of a final Office action, a Notice of Allowance, the filing of a Notice of Appeal, or the filing of a Request for Continued Examination (RCE) is the final disposition.

If, during prosecution, a paper is not filed electronically using EFS-web, a reply is filed but is not fully responsive, the application is involved in an appeal, or a proceeding outside normal examination process, the application will still be examined expeditiously, however, the final disposition may occur more than twelve months from the filing of the application.

Any inquiry regarding this decision should be directed to the undersigned at (571) 272-1638.

Edward Westin

Edward Westin, Quality Assurance Specialist
Technology Center 2800
Semiconductors, Electrical and Optical
Systems and Components

UNITED STATES PATENT AND TRADEMARK OFFICE

UNITED STATES DEPARTMENT OF COMMERCE
United States Patent and Trademark Office
Address: COMMISSIONER FOR PATENTS
P.O. Box 1450
Alexandria, Virginia 22313-1450
www.uspto.gov

APPLICATION NO.	FILING DATE	FIRST NAMED INVENTOR	ATTORNEY DOCKET NO.	CONFIRMATION NO.
12/118,499	05/09/2008	Jonathan Z. Sun	YOR920070652US1	1138

48915 7590 08/15/2008
CANTOR COLBURN LLP-IBM YORKTOWN
20 Church Street
22nd Floor
Hartford, CT 06103

EXAMINER
HUR, JUNG H

ART UNIT	PAPER NUMBER
2824	

MAIL DATE	DELIVERY MODE
08/15/2008	PAPER

Please find below and/or attached an Office communication concerning this application or proceeding.

The time period for reply, if any, is set in the attached communication.

UNITED STATES PATENT AND TRADEMARK OFFICE

Commissioner for Patents
United States Patent and Trademark Office
P.O. Box 1450
Alexandria, VA 22313-1450
www.uspto.gov

CANTOR COLBURN LLP-IBM YORKTOWN
20 Church Street
22nd Floor
Hartford, CT 06103

In re Application of: Jonathan Sun et al. Serial No.: 12/118,499 Filed: May 9, 2008 Attorney Docket No.: YOR920070652US1 Title: METHODS INVOLVING RESETTING SPIN-TORQUE MAGNETIC RANDOM ACCESS MEMORY WITH DOMAIN WALL	: : : : : : : :	DECISION ON PETITION TO MAKE SPECIAL FOR NEW APPLICATION UNDER 37 C.F.R. § 1.102 & M.P.E.P. § 708.02

This is a decision on the petition filed on May 9, 2008 to make the above-identified application special for accelerated examination procedure under 37 C.F.R. § 1.102 and M.P.E.P. §708.02(a).

The petition to make the application special is **DISMISSED**.

REGULATION AND PRACTICE

A grantable petition to make special under 37 C.F.R. § 1.102(d), M.P.E.P. §708.02(a) and pursuant to the "Change to Practice for Petitions in Patent Applications to Make Special and for Accelerated Examination" published in the Federal Register on June 26, 2006 (71 Fed. Reg. 36323), must satisfy the following conditions:

I. Conditions Regarding the Application:

1. the application must be a non-reissue utility or design application filed under 37 CFR 1.111(a);
2. the application, the petition and the required fees must be filed electronically using the USPTO's electronic filing system (EFS), or EFS-web; if not filed electronically, a statement asserting that EFS and EFS-web were not available during the normal business hours.
3. at the time of filing, the application must be complete under 37 CFR 1.51 and in condition for examination;
4. the application must contain three or fewer independent claims and twenty or fewer total claims and the claims must be directed to a single invention.

II. Conditions Regarding the Petition:

The petition must:

1. be filed with the application;

2. include a statement that applicant agrees not to separately argue the patentability of any independent claim during any appeal in the application;

3. include a statement that applicant agrees to make an election without traverse in a telephone interview;

4. include a statement that applicant agrees to conduct such an interview when requested by the examiner; and

5. include a statement, made based on a good faith belief, that a preexamination search in compliance with the following requirements, was conducted, including an identification of the field of search by United States class and subclass, where applicable, and for database searches, the search logic or chemical structure or sequence used as a query, the name of the file(s) searched and the database service, and the date of the search.

The pre-examination search must:

5.1 involve U.S. patents and patent application publications, foreign patent documents, and non-patent literature, unless the applicant can justify with reasonable certainty that no references more pertinent than those already identified are likely to be found in the eliminated sources and includes such a justification with this statement;

5.2. be directed to the claimed invention and encompass all of the features of the claims, giving the claims the broadest reasonable interpretation; and

5.3. encompass the disclosed features that may be claimed.

6. must provide in support of the petition an accelerated examination support document. An accelerated examination support document must include:

6.1. an information disclosure statement (IDS) in compliance with 37 CFR 1.98 citing each reference deemed most closely related to the subject matter of each of the claims;

6.2. an identification of all the limitations in the claims that are disclosed by the reference specifying where the limitation is disclosed in the cited reference;

6.3. a detailed explanation of how each of the claims are patentable over the references cited with particularity required by 37 CFR 1.111(b) and (c);

6.4. a concise statement of the utility of the invention as defined in each of the independent claims (unless the application is a design application);

6.5. a showing of where each limitation of the claims finds support under 35 USC 112, first paragraph, in the written description of the specification. If applicable, the showing must also identify: (1) each means- (or step) plus-function claim element that invokes consideration under 35 USC 112, sixth paragraph; and (2) the structure, material, or acts in the specification that corresponds to each means- (or step) plus-function claim element that invokes consideration under 35 USC 112, sixth paragraph; if the application claims the benefit of one or more applications under title 35, United States Code, the showing must also include where each limitation of the claims finds support under 35 USC 112, first paragraph, in each such application in which such supports exists; and

6.6. an identification of any cited references that may be disqualified under 35 USC 103(c).

REVIEW OF FACTS

The application is eligible for the accelerated examination program as set forth in section I above.

The petition meets conditions II.1 through II.4; conditions II.6.1-II.6.4 and II.6.6 above. However, the petition does not meet conditions II.5 and II.6.5 above.

Regarding the conditions set forth in II.5 above, the field of search should properly include class 365, subclasses 225.5 and 243.5, to cover the subject matter being claimed. In addition, the text search should properly include: "domain boundary" (synonymous with "domain wall" recited in the claims), "pinned layer" (synonymous with "reference layer" recited in the claims), "storage layer" and "data layer" (synonymous with "free layer" recited in the claims), and "magnetoresistive" (commonly represents M in MRAM which is a type of memory that commonly includes "free layer" and "reference layer" recited in the claims).

Regarding the condition set forth in II.6.5 above, the examination support document supplied by the petitioner does not specifically show where each limitation of the claim finds support under 35 USC 112, first paragraph, in the written description of the specification. For example, the support document indicates that support for the step of "inducing a first current through a first conductor" is found in "Par. 23," but paragraph [0023] in the specification filed on May 9, 2008 is directed to inducing a second current (101b) and not a first current (101a). The examination support document should show where each limitation of the claim finds support in the written description of the specification by reference to the paragraph numbering provided in the specification filed on May 9, 2008.

Accordingly, the petition fails to meet conditions II.5 and II.6.5 for the reasons cited above.

DECISION

For the above-stated reasons, the petition is **dismissed**. The application will therefore be taken up by the examiner for action in its regular turn.

Petitioner is given a single opportunity to perfect the petition. Any request for reconsideration of this decision must be submitted within 1 (one) month or 30 (thirty) days, whichever is longer, (no extension of time under 37 CFR 1.136(a) is available) from the date of this decision in order to be considered timely. Any request for reconsideration must address the deficiencies indicated above.

Petitioner is reminded that, upon granting of the special status of the application on request for reconsideration, the application will be processed expeditiously. However, due to the dismissal of the instant petition, examination may not be completed within twelve months of the filing date of the application.

Any inquiry regarding this decision should be directed to the undersigned at (571) 272-1638.

Edward Westin

Edward Westin, Quality Assurance Specialist
Technology Center 2800 - Semiconductors,
Electrical & Optical Systems & Components

EW/JC

UNITED STATES PATENT AND TRADEMARK OFFICE

UNITED STATES DEPARTMENT OF COMMERCE
United States Patent and Trademark Office
Address: COMMISSIONER FOR PATENTS
P.O. Box 1450
Alexandria, Virginia 22313-1450
www.uspto.gov

APPLICATION NO.	FILING DATE	FIRST NAMED INVENTOR	ATTORNEY DOCKET NO.	CONFIRMATION NO.
12/118,499	05/09/2008	Jonathan Z. Sun	YOR920070652US1	1138

48915 7590 12/09/2008
CANTOR COLBURN LLP-IBM YORKTOWN
20 Church Street
22nd Floor
Hartford, CT 06103

EXAMINER
HUR, JUNG H

ART UNIT	PAPER NUMBER
2824	

NOTIFICATION DATE	DELIVERY MODE
12/09/2008	ELECTRONIC

Please find below and/or attached an Office communication concerning this application or proceeding.

The time period for reply, if any, is set in the attached communication.

Notice of the Office communication was sent electronically on above-indicated "Notification Date" to the following e-mail address(es):

usptopatentmail@cantorcolburn.com

UNITED STATES PATENT AND TRADEMARK OFFICE

Commissioner for Patents
United States Patent and Trademark Office
P.O. Box 1450
Alexandria, VA 22313-1450
www.uspto.gov

CANTOR COLBURN LLP-IBM YORKTOWN
20 Church Street
22nd Floor
Hartford, CT 06103

In re Application of: Jonathan Sun et al. Serial No.: 12/118,499 Filed: May 9, 2008 Docket No.: YOR920070652US1 Title: METHODS INVOLVING RESETTING SPIN-TORQUE MAGNETIC RANDOM ACCESS MEMORY WITH DOMAIN WALL	DECISION ON PETITION TO MAKE SPECIAL FOR NEW APPLICATION UNDER 37 C.F.R. § 1.102 & M.P.E.P. § 708.02

This is a decision on the revised petition filed on September 5, 2008 to make the above-identified application special for accelerated examination procedure under 37 C.F.R. §1.102.

The petition to make the application special is **GRANTED**.

The application is eligible for accelerated examination and the petition complies with the conditions for granting the application special status pursuant to the "Change to Practice for Petitions in Patent Applications to Make Special and for Accelerated Examination" published June 26, 2006, in the Federal Register. (71 Fed. Reg. 36323).

The prosecution of the instant application will be conducted expeditiously according to the following guidelines.

1. The application will be docketed to an examiner and taken up for action within two weeks of the date of this decision.

2. Restriction Practice:
   If the examiner determines that the claims are not directed to a single invention, a telephone request to elect one single invention will be made pursuant to MPEP 812.01. As a prerequisite to the grant of this petition, the applicant has agreed to make an oral election, by telephone, without traverse. If the applicant refuses to make an election without traverse, or the examiner cannot reach the applicant after a reasonable effort, the examiner will treat the first claimed invention (invention defined by claim 1) as having being constructively elected without traverse for examination.

3. Office action:
If it is determined that, after appropriate consultation, there is a potential rejection or any other issue to be addressed, the examiner will telephone the applicant and arrange an interview to discuss and resolve the issue. An Office action, other than a Notice of Allowance and Fee(s) Due (Notice of Allowance), will not be issued unless either: 1) an interview was conducted but did not result in agreed to action that places the application in condition for allowance, or, 2) a determination is made that an interview would be unlikely to result in the application being placed in condition for allowance, and 3) an internal conference has been held to review any rejection of any claim.

4. Time for Reply:
An Office action other than a Notice of Allowance or a final Office action will set a shortened statutory period of one month or thirty days, whichever is longer, for reply with no extension of time available under 37 C.F.R. §1.136(a). Failure to timely file a reply within this non-extendible period for reply will result in the abandonment of the application.

5. Reply by Applicant:
A timely reply to an Office action other than the Notice of Allowance must be submitted electronically via EFS or EFS-web and limited to addressing the rejections, objections and requirement made. Any amendment that attempts to: 1) add claims which would result in more than three pending independent claims or more than twenty pending total claims; 2) present claims not encompassed by the pre-examination search or an updated accelerated examination support document; or 3) present claims that are directed a non-elected invention or an invention other than that previously claimed and examined in the application, will be treated as not fully responsive and will not be entered.

   For any amendment to the claims (including any new claim) that is not encompassed by the accelerated examination support document, applicant must provide an updated accelerated examination support document that encompasses the amended or new claims at the time of filing of the amendment.

   To proceed expeditiously with the examination, it is recommended that a reply with amendments made to any claim or with any new claim being added be accompanied by an updated accelerated examination support document or a statement explaining how the amended or new claim is supported by the original accelerated examination support document.

6. Information Disclosure Statement (IDS):
Any IDS filed during prosecution must be submitted electronically via EFS or EFS-web, accompanied by an updated accelerated examination support document, and be in compliance with 37 C.F.R. §1.97 and §1.98.

7. Post-Allowance Processing:
   To expedite processing of the allowed application into a patent, the applicant must: 1) pay the required fees within one month of the date of the Notice of Allowance, and 2) not file any post allowance papers not required by the Office. In no event may the issue fee be paid and accepted later than three months from the date of the Notice of Allowance.

8. After-Final and Appeal Procedures:
   To expedite prosecution, after receiving the final Office action, applicant must: 1) promptly file a notice of appeal, an appeal brief and appeal fees; and 2) not request a pre-appeal brief conference.

   Any amendment, affidavit or other evidence filed after final Office action must comply with applicable rules and the requirements outlined in numbered paragraphs 5 and 6 above.

   On appeal, the application will proceed according to normal appeal procedures. After appeal, the application will again be treated special.

9. Proceedings Outside the Normal Examination Process:
   If the application becomes involved in a proceeding that is outside the normal examination process (e.g., a secrecy order, national security review, interference proceeding, petitions under 37 C.F.R. §1.181, §1.182 or §1.183), the application will be treated special before and after such proceeding.

10. Final Disposition:
    The twelve-month goal of this accelerated examination procedure ends with a final disposition. The mailing of a final Office action, a Notice of Allowance, the filing of a Notice of Appeal, or the filing of a Request for Continued Examination (RCE) is the final disposition.

If, during prosecution, a paper is not filed electronically using EFS-web, a reply is filed but is not fully responsive, the application is involved in an appeal, or a proceeding outside normal examination process, the application will still be examined expeditiously, however, the final disposition may occur more than twelve months from the filing of the application.

Any inquiry regarding this decision should be directed to the undersigned at (571) 272-1638.

Edward Westin

Edward Westin, Quality Assurance Specialist
Technology Center 2800 - Semiconductors,
Electrical & Optical Systems & Components

EW/JC

UNITED STATES PATENT AND TRADEMARK OFFICE

Commissioner for Patents
United States Patent and Trademark Office
P.O. Box 1450
Alexandria, VA 22313-1450
www.uspto.gov

LADAS & PARRY
5670 WILSHIRE BOULEVARD, SUITE 2100
LOS ANGELES, CA 90036-5679

MAILED

APR 26 2010

OFFICE OF PETITIONS

In re Application of	:	
Joo Gon Kim	:	DECISION ON PETITION
Application No. 12/118,516	:	TO WITHDRAW
Filed: May 9, 2008	:	FROM RECORD
Attorney Docket: 086121-0024	:	

This is a decision on the Request to Withdraw as attorney or agent of record under 37 C.F.R. § 1.36(b), filed March 4, 2010.

The request is **NOT APPROVED** because it is moot.

A review of the file record indicates that Ladas & Perry was revoked as power of attorney by the assignee of the patent application on March 26, 2010. Accordingly, the request to withdraw under 37 C.F.R. § 1.36(b) is moot.

All future communications from the Office will continue to be directed to the below-listed address until otherwise notified by applicant.

Telephone inquires concerning this decision should be directed to the undersigned at 571-272-6059.

Alicia Kelley
Petitions Examiner
Office of Petitions

cc: MCDERMOTT WILL & EMERY LLP
600 13TH STREET, N.W.
WASHINGTON DC 20005-3096

UNITED STATES PATENT AND TRADEMARK OFFICE

Commissioner for Patents
United States Patent and Trademark Office
P.O. Box 1450
Alexandria, VA 22313-1450
www.uspto.gov

FITZPATRICK CELLA (MARVELL)
30 ROCKEFELLER PLAZA
NEW YORK NY 10112-3800

COPY MAILED
DEC 0 8 2008

In re Application of	:	
STEVENSON, Paul E.	:	
Application No. 12/118,574	:	DECISION ON PETITION
Filed: May 09, 2008	:	TO WITHDRAW
Attorney Docket No. **02666.001918.**	:	FROM RECORD
	:	

This is a decision on the Request to Withdraw as attorney or agent under 37 C.F.R. § 1.36(b) or 37 C.F.R. § 10.40 filed October 31, 2008.

The request is **NOT APPROVED**.

A review of the file record indicates that Michael K. O'Neill does not have power of attorney in this patent application nor is there any statement or evidence of record of employment in or otherwise being engaged in the proceedings in this patent application. Accordingly, the request to withdraw under 37 C.F.R. § 1.36(b) is not applicable.

All future communications from the Office will continue to be directed to the above-listed address until otherwise properly notified by the applicant.

Telephone inquires concerning this decision should be directed to Tredelle Jackson at 571-272-2783.

Tredelle D. Jackson
Paralegal Specialist
Office of Petitions

cc: **MARVELL PATENT DEPARTMENT C/O KELVIN VIVIAN**
5488 MARVELL LANE
SANTA CLARA CA 95054

UNITED STATES PATENT AND TRADEMARK OFFICE

Commissioner for Patents
United States Patent and Trademark Office
P.O. Box 1450
Alexandria, VA 22313-1450
www.uspto.gov

MICHAEL J. URE
10518 PHIL PLACE
CUPERTINO CA 95014

COPY MAILED

NOV 0 6 2008

OFFICE OF PETITIONS

In re Application of	:
Leedy, Glenn J.	:
Application No. 12/118,582	: DECISION GRANTING PETITION
Filed: May 9, 2008	: UNDER 37 CFR 1.78(a)(3) AND
Attorney Docket No. E080508.VSI.US2	: UNDER 37 CFR 1.78(a)(6)

This is a decision on the petitions under 37 CFR §§ 1.78(a)(3) and 1.78(a)(6), filed October 27, 2008, to accept an unintentionally delayed claim under 35 U.S.C. §§120, 365(c) and 119(e) for the benefit of the prior-filed applications set forth in the concurrently filed amendment.

The petitions are **GRANTED**.

A petition for acceptance of a claim for late priority under 37 CFR §§ 1.78(a)(3) and 1.78(a)(6) is only applicable to those applications filed on or after November 29, 2000. Further, the petition is appropriate only after the expiration of the period specified in 37 CFR §§ 1.78(a)(2)(ii) and 1.78(a)(5)(ii). In addition, the petition under 37 CFR §§ 1.78(a)(3) and 1.78(a)(6) must be accompanied by:

(1) the reference required by 35 U.S.C. §§ 120 and 119(e) and 37 CFR §§ 1.78(a)(2)(i) and 1.78(a)(5)(i) of the prior-filed application, unless previously submitted;
(2) the surcharge set forth in § 1.17(t); and
(3) a statement that the entire delay between the date the claim was due under 37 CFR §§ 1.78(a)(2)(ii) and 1.78(a)(5)(ii) and the date the claim was filed was unintentional. The Commissioner may require additional where there is a question whether the delay was unintentional.

The instant application was filed on May 9, 2008 and was pending at the time of filing of the instant petition. A reference to the prior-filed applications has been included in an amendment to the first sentence of the specification following the title, as required by 37 CFR §§ 1.78(a)(2)(iii) and 1.78(a)(5)(iii).

The instant nonprovisional application was filed after November 29, 2000, and the claim for priority herein is submitted after expiration of the period specified in 37 CFR §§ 1.78(a)(2)(ii) and 1.78(a)(5)(ii). *See* 35 U.S.C. §§ 120 and 365(c) and § 119(e). Accordingly, having found that the instant petition satisfies the conditions of 37 CFR §§ 1.78(a)(3) and 1.78(a)(6) for acceptance of an unintentionally delayed claim for priority under 35 U.S.C. §§ 120 and 365(c)

and § 119(e), the petition to accept an unintentionally delayed claim of benefit to the prior-filed applications is granted.

The granting of the petition to accept the delayed benefit claim to the prior-filed applications under 37 CFR §§ 1.78(a)(3) and 1.78(a)(6) should not be construed as meaning that the instant application is entitled to the benefit of the filing date of the prior-filed applications. In order for the instant application to be entitled to the benefit of the prior-filed applications, all other requirements under 35 U.S.C. §120 and 1.78(a)(1) and (a)(2) and under 35 U.S.C. §119(e) and 37 CFR 1.78(a)(4) and (a)(5) must be met. Similarly, the fact that the corrected Filing Receipt accompanying this decision on petition includes the prior-filed applications should not be construed as meaning that applicant is entitled to the claim for benefit of priority to the prior-filed applications noted thereon. Accordingly, the examiner will, in due course, consider this benefit claim and determine whether the instant application is entitled to the benefit of the earlier filing date.

A corrected Filing Receipt, which includes the priority claim to the prior-filed applications, accompanies this decision on petition.

Any questions concerning this matter may be directed to the undersigned at (571) 272-3206.

This matter is being referred to Technology Center Art Unit 2813 for appropriate action on the amendment submitted October 27, 2008, including consideration by the examiner of the claim under 35 U.S.C. § §120 and 365(c) and 37 CFR 1.78(a)(2) for the benefit of the prior-filed applications, and for consideration of the claim under 35 U.S.C. §119(e) and 37 CFR 1.78(a)(5) for the benefit of the prior-filed provisional application.

Liana Walsh
Petitions Examiner
Office of Petitions

ATTACHMENT: Corrected Filing Receipt

UNITED STATES PATENT AND TRADEMARK OFFICE

UNITED STATES DEPARTMENT OF COMMERCE
United States Patent and Trademark Office
Address: COMMISSIONER FOR PATENTS
P.O. Box 1450
Alexandria, Virginia 22313-1450
www.uspto.gov

APPLICATION NUMBER	FILING or 371(c) DATE	GRP ART UNIT	FIL FEE REC'D	ATTY.DOCKET.NO	TOT CLAIMS	IND CLAIMS
12/118,582	05/09/2008	2813	1595	E080508.VSI.US2	56	1

CONFIRMATION NO. 1293

CORRECTED FILING RECEIPT

30232
MICHAEL J. URE
10518 PHIL PLACE
CUPERTINO, CA 95014

OC000000032919979

Date Mailed: 11/03/2008

Receipt is acknowledged of this non-provisional patent application. The application will be taken up for examination in due course. Applicant will be notified as to the results of the examination. Any correspondence concerning the application must include the following identification information: the U.S. APPLICATION NUMBER, FILING DATE, NAME OF APPLICANT, and TITLE OF INVENTION. Fees transmitted by check or draft are subject to collection. Please verify the accuracy of the data presented on this receipt. **If an error is noted on this Filing Receipt, please submit a written request for a Filing Receipt Correction. Please provide a copy of this Filing Receipt with the changes noted thereon. If you received a "Notice to File Missing Parts" for this application, please submit any corrections to this Filing Receipt with your reply to the Notice. When the USPTO processes the reply to the Notice, the USPTO will generate another Filing Receipt incorporating the requested corrections**

Applicant(s)

Glenn J. Leedy, Saline, MI;

Assignment For Published Patent Application

Elm Technology Corporation, Saline, MI

Power of Attorney:
Michael Ure--33089

Domestic Priority data as claimed by applicant

This application is a DIV of 10/485,046 01/22/2004 PAT 7,402,897
which is a CON of PCT/US03/25048 08/08/2003
which claims benefit of 60/402,112 08/08/2002

Foreign Applications

If Required, Foreign Filing License Granted: 05/20/2008

The country code and number of your priority application, to be used for filing abroad under the Paris Convention, is **US 12/118,582**

Projected Publication Date: Not Applicable

Non-Publication Request: No

Early Publication Request: No
**** SMALL ENTITY ****

Title

Vertical system integration

Preliminary Class

257

PROTECTING YOUR INVENTION OUTSIDE THE UNITED STATES

Since the rights granted by a U.S. patent extend only throughout the territory of the United States and have no effect in a foreign country, an inventor who wishes patent protection in another country must apply for a patent in a specific country or in regional patent offices. Applicants may wish to consider the filing of an international application under the Patent Cooperation Treaty (PCT). An international (PCT) application generally has the same effect as a regular national patent application in each PCT-member country. The PCT process **simplifies** the filing of patent applications on the same invention in member countries, but **does not result** in a grant of "an international patent" and does not eliminate the need of applicants to file additional documents and fees in countries where patent protection is desired.

Almost every country has its own patent law, and a person desiring a patent in a particular country must make an application for patent in that country in accordance with its particular laws. Since the laws of many countries differ in various respects from the patent law of the United States, applicants are advised to seek guidance from specific foreign countries to ensure that patent rights are not lost prematurely.

Applicants also are advised that in the case of inventions made in the United States, the Director of the USPTO must issue a license before applicants can apply for a patent in a foreign country. The filing of a U.S. patent application serves as a request for a foreign filing license. The application's filing receipt contains further information and guidance as to the status of applicant's license for foreign filing.

Applicants may wish to consult the USPTO booklet, "General Information Concerning Patents" (specifically, the section entitled "Treaties and Foreign Patents") for more information on timeframes and deadlines for filing foreign patent applications. The guide is available either by contacting the USPTO Contact Center at 800-786-9199, or it can be viewed on the USPTO website at http://www.uspto.gov/web/offices/pac/doc/general/index.html.

For information on preventing theft of your intellectual property (patents, trademarks and copyrights), you may wish to consult the U.S. Government website, http://www.stopfakes.gov. Part of a Department of Commerce initiative, this website includes self-help "toolkits" giving innovators guidance on how to protect intellectual property in specific countries such as China, Korea and Mexico. For questions regarding patent enforcement issues, applicants may call the U.S. Government hotline at 1-866-999-HALT (1-866-999-4158).

LICENSE FOR FOREIGN FILING UNDER

Title 35, United States Code, Section 184

Title 37, Code of Federal Regulations, 5.11 & 5.15

GRANTED

The applicant has been granted a license under 35 U.S.C. 184, if the phrase "IF REQUIRED, FOREIGN FILING LICENSE GRANTED" followed by a date appears on this form. Such licenses are issued in all applications where the conditions for issuance of a license have been met, regardless of whether or not a license may be required as

set forth in 37 CFR 5.15. The scope and limitations of this license are set forth in 37 CFR 5.15(a) unless an earlier license has been issued under 37 CFR 5.15(b). The license is subject to revocation upon written notification. The date indicated is the effective date of the license, unless an earlier license of similar scope has been granted under 37 CFR 5.13 or 5.14.

This license is to be retained by the licensee and may be used at any time on or after the effective date thereof unless it is revoked. This license is automatically transferred to any related applications(s) filed under 37 CFR 1.53(d). This license is not retroactive.

The grant of a license does not in any way lessen the responsibility of a licensee for the security of the subject matter as imposed by any Government contract or the provisions of existing laws relating to espionage and the national security or the export of technical data. Licensees should apprise themselves of current regulations especially with respect to certain countries, of other agencies, particularly the Office of Defense Trade Controls, Department of State (with respect to Arms, Munitions and Implements of War (22 CFR 121-128)); the Bureau of Industry and Security, Department of Commerce (15 CFR parts 730-774); the Office of Foreign AssetsControl, Department of Treasury (31 CFR Parts 500+) and the Department of Energy.

NOT GRANTED

No license under 35 U.S.C. 184 has been granted at this time, if the phrase "IF REQUIRED, FOREIGN FILING LICENSE GRANTED" DOES NOT appear on this form. Applicant may still petition for a license under 37 CFR 5.12, if a license is desired before the expiration of 6 months from the filing date of the application. If 6 months has lapsed from the filing date of this application and the licensee has not received any indication of a secrecy order under 35 U.S.C. 181, the licensee may foreign file the application pursuant to 37 CFR 5.15(b).

UNITED STATES PATENT AND TRADEMARK OFFICE

Commissioner for Patents
United States Patent and Trademark Office
P.O. Box 1450
Alexandria, VA 22313-1450
www.uspto.gov

DEAN P ALDERUCCI
CANTOR FITZGERALD LP
110 EAST 59TH STREET (6TH FLOOR)
NEW YORK NY 10022

COPY MAILED

MAY 15 2009

OFFICE OF PETITIONS

In re Application of	:	
Stuart Hersch	:	
Application No. 12/118,597	:	DECISION ON PETITION
Filed: May 9, 2008	:	
Attorney Docket No. 07-2167	:	

This is a decision on the petition to withdraw the holding of abandonment under 37 CFR 1.181, filed March 10, 2009.

The petition is **GRANTED.**

The above-identified application was held abandoned for failure to timely file a response to the Notice to File Missing Parts mailed May 23, 2008. This Notice set an extendable period for reply of two months to submit: (1) an executed oath or declaration, (2) the $130 surcharge for its late filing, (3) replacement drawings. The Office mailed a Notice of Abandonment on January 8, 2009, stating that no reply had been received.

A review of the application file reveals the presence of a declaration, the $130 surcharge for its late filing, and replacement drawings, all filed on December 23, 2008, made timely by obtaining a five month extension of time.

In view thereof, **the holding of abandonment is withdrawn.**

The matter is being forwarded to the Office of Patent Application Processing for pre-examination processing, using the declaration and replacement drawings filed on December 23, 2008.

Telephone inquiries regarding this decision should be directed to the undersigned at (571)272-3207.

Cliff Congo
Petitions Attorney
Office of Petitions

UNITED STATES PATENT AND TRADEMARK OFFICE

Commissioner for Patents
United States Patent and Trademark Office
P.O. Box 1450
Alexandria, VA 22313-1450
www.uspto.gov

COPY MAILED
NOV 23 2009
OFFICE OF PETITIONS

DECHERT, LLP
P.O. BOX 390460
MOUNTAIN VIEW, CA 94039-0460

In re Application of	:	
Thomas C. Bishoff, et. al.	:	DECISION GRANTING STATUS
Application No. 12/118,598	:	UNDER 37 CFR 1.47(a)
Filed: May 9, 2008	:	
Attorney Docket No. 377655-001US (398991)	:	

This is in response to the petition under 37 CFR 1.47(a), filed December 22, 2008.

The petition is **GRANTED**.

Petitioner has shown that the non-signing inventor has refused to join in the filing of the above-identified application.

The application and papers have been reviewed and found in compliance with 37 CFR 1.47(a). This application is hereby accorded Rule 1.47(a) status.

As provided in 37 CFR 1.47(c), this Office will forward notice of this application's filing to the non-signing inventor at the address given in the petition. Notice of the filing of this application will also be published in the Official Gazette.

This application is being referred to Technology Center Art Unit 3766 for examination in due course.

Telephone inquiries regarding this decision should be directed to Andrea Smith at (571) 272-3226.

Andrea Smith
Petitions Examiner
Office of Petitions

David Bucci
Petitions Examiner

UNITED STATES PATENT AND TRADEMARK OFFICE

Commissioner for Patents
United States Patent and Trademark Office
P.O. Box 1450
Alexandria, VA 22313-1450
www.uspto.gov

COPY MAILED

NOV 23 2009

OFFICE OF PETITIONS

John Squeri
601 Oneida Lane
Downington, PA 19335

In re Application of
Thomas C. Bischoff, et. al.
Application No. 12/118,598
Filed: May 9, 2008
For: IMPLANTABLE ELECTROPHYSIOLOGY LEAD BODY

Dear Mr. Squeri:

You are named as a joint inventor in the above-identified United States patent application, filed under the provisions of 35 U.S.C. 116 (United States Code), and 37 CFR 1.47(a), Rules of Practice in Patent Cases. Should a patent be granted on the application you will be designated therein as a joint inventor.

As a named inventor you are entitled to inspect any paper in the file wrapper of the application, order copies of all or any part thereof (at a prepaid cost per 37 CFR 1.19) or make your position of record in the application. Alternatively, you may arrange to do any of the preceding through a registered patent attorney or agent presenting written authorization from you. If you care to join the application, counsel of record (see below) would presumably assist you. Joining the application would entail the filing of an appropriate oath or declaration by you pursuant to 37 CFR 1.63.

Telephone inquiries regarding this communication should be directed to Andrea Smith at (571) 272-3226. Requests for information regarding your application should be directed to the File Information Unit at (703) 308-2733. Information regarding how to pay for and order a copy of the application, or a specific paper in the application should be directed to the Certification Division at (571) 272-3150 or 1 (800) 972-6382 (outside the Washington, DC area).

Andrea Smith
Petitions Examiner
Office of Petitions

David Bucci
Petitions Examiner

cc: DECHERT LLP
P.O. BOX 390460
MOUNTAIN VIEW, CA 94039-0460

UNITED STATES PATENT AND TRADEMARK OFFICE

Commissioner for Patents
United States Patent and Trademark Office
P.O. Box 1450
Alexandria, VA 22313-1450
www.uspto.gov

JONES DAY
222 EAST 41ST ST
NEW YORK NY 10017

MAILED

AUG 28 2009

OFFICE OF PETITIONS

In re Application of	:	
Gotthold et al.	:	DECISION ON PETITION
Application No. 12/118,629	:	TO WITHDRAW
Filed: May 9, 2008	:	FROM RECORD
Attorney Docket No. 656052-901040	:	

This is a decision on the Request to Withdraw as attorney or agent of record under 37 C.F.R. § 1.36(b), filed November 20, 2008.

The request is **NOT APPROVED**.

A review of the file record indicates that Jones Day: (1) does not have power of attorney in this patent application; but (2) has been employed or otherwise engaged in the proceedings in this patent application.

The Office will no longer approve requests from practitioners to withdraw from applications where the requesting practitioner is acting, or has acted, in a representative capacity pursuant to 37 CFR 1.34. In these situations, the practitioner is responsible for the correspondence the practitioner files in the application while acting in a representative capacity. As such, there is no need for the practitioner to obtain the Office's permission to withdraw from representation.

Further, the Request for Withdrawal as Attorney or Agent and Change of Correspondence Address submitted herein cannot be approved at this time since the Office no longer accepts address changes to a new practitioner or law firm filed with requests under 37 C.F.R. § 1.36(b).

The Office will only accept correspondence address changes to the most current address information provided for the assignee of the entire interest *who properly became of record under 37 CFR 3.71,* or, if no assignee of the entire interest has properly been made of record, the most current address information provided for the first named inventor. 37 CFR 3.71(c) states:

> *An assignee becomes of record either in a national patent application or a reexamination proceeding by filing a statement in compliance with § 3.73(b) that is signed by a party who is authorized to act on behalf of the assignee.*

All future communications from the Office will be directed to the proper Customer No. listed on the Oath/Declaration upon filing until otherwise properly notified by the applicant or a proper change of correspondence address have been submitted.

Telephone inquires concerning this decision should be directed to Alicia Kelley at (571) 272-6059. All other inquires concerning either the examination or status of the application should be directed to the Technology Center AU 2855.

/Liana Walsh/
Liana Walsh
Petitions Examiner
Office of Petitions

UNITED STATES PATENT AND TRADEMARK OFFICE

Commissioner for Patents
United States Patent and Trademark Office
P.O. Box 1450
Alexandria, VA 22313-1450
www.uspto.gov

PLANTRONICS, INC.
IP Department/Legal
345 ENCINAL STREET
P.O. BOX 635
SANTA CRUZ CA 95060-0635

COPY MAILED

SEP 2 4 2008

OFFICE OF PETITIONS

In re Application of	:	
EDWARD L. REUSS	:	
Application No. 12/118,638	:	DECISION ON PETITION
Filed: May 9, 2008	:	
Attorney Docket No. 01-7497	:	

This is in response to the petition under 37 CFR 1.57(a), filed July 24, 2008, requesting that the above-referenced application be accorded a filing date of May 9, 2008. This petition is being treated pursuant to 37 CFR 1.53(e)(2).[1]

The application papers in the above-identified application were deposited on May 9, 2008. However, on May 27, 2008, the Office of Patent Application Processing mailed applicant a "Notice of Incomplete Nonprovisional Application," notifying applicant that the application papers had not been accorded a filing date because the application was deposited without drawings. In response, applicant timely filed this petition. Applicant requests that the application be amended to include the inadvertently omitted drawings on the basis that the application as filed contained a prior benefit claim under 37 CFR 1.78.

Applicant's arguments and evidence have been considered. However, a review of the application confirms that, as filed, the application contained at least one method claim. MPEP § 601.01(f) provides that:

> It has been USPTO practice to treat an application that contains at least one process or method claim as an application for which a drawing is not necessary for an understanding of the invention under 35 U.S.C. 113 (first sentence).

[1] Any request for review of a notification pursuant to § 1.53(e)(1), or a notification that the original application papers lack a portion of the specification or drawing(s), must be by way of a petition pursuant to § 1.53(e) accompanied by the fee set forth in § 1.17(f). In the absence of a timely (§ 1.181(f)) petition, the filing date of an application in which the applicants were notified of a filing error pursuant to § 1.53(e)(1) will be the date the filing error is corrected.

Thus, pursuant to § 601.01(f), a drawing is not considered essential for a filing date. The instant application is entitled to a filing date without drawings present in the application. Accordingly, the Office should have granted the application a filing date and mailed a Notice of Omitted Items instead of a Notice of Incomplete Nonprovisional Application. As stated in MPEP § 601.01(g) under the section entitled, "Application Entitled to a Filing Date," applicants may submit an amendment to include the inadvertently omitted portion of the drawing(s) pursuant to 37 CFR 1.57(a):

> [i]f an application was filed on or after September 21, 2004, and contains a claim under 37 CFR 1.55 for priority of a prior-filed foreign application, or a claim under 37 CFR 1.78 for the benefit of a prior-filed provisional, nonprovisional, or international application that was present on the filing date of the application, and the omitted portion of the drawing(s) was inadvertently omitted from the application and is completely contained in the prior-filed application[.]

Please note that no petition is required and that the amendment must comply with 37 CFR 1.57(a) and 37 CFR 1.121. See MPEP § 201.17. Any amendment to include the inadvertently omitted drawing(s) will be considered by the examiner.

The petition is **GRANTED** to the extent the instant application will be accorded a filing date of May 9, 2008, with no drawings as part of the original disclosure.

Given the basis for granting this petition, the $400.00 petition fee is being refunded to the Deposit Account.

Pursuant to this decision, the application will be referred to Office of Patent Application Processing for:

- **correction of the filing date to May 9, 2008;**
- **for indication in Office records, as appropriate, that "0" sheets of drawings were present on filing, and;**
- **for issuance of a filing receipt.**

Entry of the amendment filed July 24, 2008, will be determined by the examiner.

Telephone inquiries concerning this matter may be directed to Christina Tartera Donnell, Senior Petitions Attorney, at (571) 272-3211.

Anthony Knight
Supervisor
Office of Petitions

UNITED STATES PATENT AND TRADEMARK OFFICE

Commissioner for Patents
United States Patent and Trademark Office
P.O. Box 1450
Alexandria, VA 22313-1450
www.uspto.gov

AUTO CHAISE
12 ST JOHNS WALK
BRIDLINGTON
EAST YORKSHIRE Y016 -4HJ GB UNITED KINGDOM

MAILED

MAR 16 2009

OFFICE OF PETITIONS

In re Application of	:	
EDWARDS, John A.	:	
Application No. 12/118,774	:	DECISION ON PETITION
Filed: May 12, 2008	:	TO MAKE SPECIAL UNDER
Attorney Docket No.	:	37 CFR 1.102(c)(1)
	:	

This is a decision on the petition under 37 CFR 1.102(c)(1), filed December 29, 2008, to make the above-identified application special based on applicant's age as set forth in M.P.E.P. § 708.02, Section IV.

The petition is **GRANTED**.

A grantable petition to make an application special under 37 CFR 1.102(c)(1) and MPEP § 708.02, Section IV: Applicant's Age, must be accompanied by evidence showing that at least one of the applicants is 65 years of age, or more, such as a birth certificate or a statement by applicant. No fee is required.

The evidence submitted with the instant petition is a copy John Edwards's birth certificate indicating that he is at least 65 years of age. Accordingly, the above-identified application will be accorded "special" status.

Telephone inquiries concerning this decision should be directed to Tredelle Jackson at 571-272-2783.

All other inquiries concerning either the examination or status of the application should be directed to the Technology Center.

The application is being forwarded to the Technology Center Art Unit 3612 for action on the merits commensurate with this decision.

Tredelle D. Jackson
Paralegal Specialist
Office of Petitions

UNITED STATES PATENT AND TRADEMARK OFFICE

Commissioner for Patents
United States Patent and Trademark Office
P.O. Box 1450
Alexandria, VA 22313-1450
www.uspto.gov

PORTER WRIGHT MORRIS & ARTHUR, LLP
INTELLECTUAL PROPERTY GROUP
41 SOUTH HIGH STREET
28TH FLOOR
COLUMBUS OH 43215

COPY MAILED

JUL 18 2008

In re Application of	:	
Alan T. Rudy et al.	:	
Application No. 12/118,801	:	ON PETITION
Filed: June 26, 2008	:	
Attorney Docket Number: 4003799-164271	:	

This is a decision on the petition under 37 CFR 1.182, filed June 26, 2008, in response to the Notice to File Missing Parts mailed May 27, 2008.

The application was filed May 12, 2008 but on May 27, 2008, the Office of Data Management mailed a Notice to File Missing Parts of Nonprovisional Application stating that, *inter alia,* the application had been accorded a filing date of May 12, 2008 but that Figures 6, 7, & 8 described in the specification (description and claims) appeared to have been omitted from the application.

In response, the present petition was filed with a complete replacement set of drawings including Figures 6, 7 & 8 and an executed oath. Petitioner requests the filing date be changed to the date of receipt of the previously omitted items.

The mailing of a "Notice of Omitted Items" permits the applicant to either: (1) promptly establish prior receipt in the PTO of the drawing(s) at issue (generally by way of a date-stamped postcard receipt (MPEP 503)), or (2) promptly submit the omitted drawing(s) in a nonprovisional application and accept the date of such submission as the application filing date. An applicant asserting that the missing drawings were in fact deposited in the PTO with the application papers must file a petition (and the appropriate petition fee) with evidence of such deposit. An applicant desiring to submit the omitted drawings in a nonprovisional application and accept the date of such submission as the application filing date must file any omitted drawing(s) with an oath or declaration in compliance with 37 CFR 1.63 and 1.64 referring to such drawing(s) and a petition under 37 CFR 1.182 (with the petition fee under 37 CFR 1.17(h)) requesting the later filing date within two months of the date of the "Notice of Omitted Items" (37 CFR 1.181(f)).

Since applicant neither admits nor denies that Figures 6, 7 & 8 were present upon filing and in view of the request to have the application accepted as filed on the date of

receipt of the omitted drawing figures, the application has been accorded a filing date of June 26, 2008.

Accordingly, the petition is **GRANTED** and in accordance with applicant's request, the application will be processed and examined with a filing date of June 26, 2008, the date of receipt of the omitted drawing figures, using the papers filed on May 12, 2008 and the drawings previously omitted but submitted with the petition.

This matter is being referred to the Office of Patent Application Processing for further pre-examination processing, and for a correction of the filing date to June 26, 2008.

Telephone inquiries related to this matter should be directed to the undersigned Petitions Attorney at (57) 272-3212.

Patricia Faison-Ball

Patricia Faison-Ball
Senior Petitions Attorney
Office of Petitions

UNITED STATES PATENT AND TRADEMARK OFFICE

UNITED STATES DEPARTMENT OF COMMERCE
United States Patent and Trademark Office
Address: COMMISSIONER FOR PATENTS
P.O. Box 1450
Alexandria, Virginia 22313-1450
www.uspto.gov

APPLICATION NO.	FILING DATE	FIRST NAMED INVENTOR	ATTORNEY DOCKET NO.	CONFIRMATION NO.
12/118,816	05/12/2008	YILDIRAY SAGER	SG051108-1000	1829

7590 08/30/2008

YILDIRAY SAGER
12 STANFORD TERRACE, FL.2
SOMERVILLE, MA 02143

EXAMINER

ART UNIT	PAPER NUMBER
3623	

MAIL DATE	DELIVERY MODE
08/30/2008	PAPER

Please find below and/or attached an Office communication concerning this application or proceeding.

The time period for reply, if any, is set in the attached communication.

UNITED STATES PATENT AND TRADEMARK OFFICE

Commissioner for Patents
United States Patent and Trademark Office
P.O. Box 1450
Alexandria, VA 22313-1450
www.uspto.gov

MAILED
FROM DIRECTORS OFFICE

AUG 30 2008

TECHNOLOGY CENTER 3600

YILDIRAY SAGER
12 STANFORD TERRACE, FL.2
SOMERVILLE MA 02143

In re application of
SAGER
Application No. 12/118,816
Filed: May 12, 2008
For: SYSTEM TO ENABLE DYNAMIC HUBS FOR IMPROVING SUPPLY-CHAIN RESOURCE MANAGEMENT

DECISION ON PETITION TO MAKE SPECIAL FOR NEW APPLICATION UNDER 37 CFR 1.102

This is a decision on the petition filed on May 12, 2008 to make the above-identified application special for accelerated examination procedure under 37 C.F.R. § 1.102(d).

The petition to make the application special is **DENIED**.

REGULATION AND PRACTICE

A grantable petition to make special under 37 C.F.R. § 1.102(d) and pursuant to the "Change to Practice for Petitions in Patent Applications to Make Special and for Accelerated Examination (AE)" published in the Federal Register on June 26, 2006 (71 Fed. Reg. 36323), must satisfy the following conditions:

I. Conditions Regarding the Application:

1. the application must be a non-reissue utility or design application filed under 37 CFR 1.111(a);
2. the application, the petition and the required fees must be filed electronically using the USPTO's electronic filing system (EFS), or EFS-web; if not filed electronically, a statement asserting that EFS and EFS-web were not available during the normal business hours.
3. at the time of filing, the application must be complete under 37 CFR 1.51 and in condition for examination;
4. the application must contain three or fewer independent claims and twenty or fewer total claims and the claims must be directed to a single invention.

II. Conditions Regarding the Petition:

The petition must:

1. be filed with the application;

2. include a statement that applicant agrees not to separately argue the patentability of any independent claim during any appeal in the application;

3. include a statement that applicant agrees to make an election without traverse in a telephone interview.

4. include a statement that applicant agrees to conduct such an interview when requested by the examiner.

5. include a statement, made based on a good faith belief, that a preexamination search in compliance with the following requirements, was conducted, including an identification of the field of search by United States class and subclass, where applicable, and for database searches, the search logic or chemical structure or sequence used as a query, the name of the file(s) searched and the database service, and the date of the search.

The preexamination search must:

5.1 involve U.S. patents and patent application publications, foreign patent documents, and non-patent literature, unless the applicant can justify with reasonable certainty that no references more pertinent than those already identified are likely to be found in the eliminated sources and includes such a justification with this statement;

5.2. be directed to the claimed invention and encompass all of the features of the claims, giving the claims the broadest reasonable interpretation;

5.3. encompass the disclosed features that may be claimed.

6. must provide in support of the petition an accelerated examination support document.

An accelerated examination support document must include:

6.1. an information disclosure statement (IDS) in compliance with 37 CFR 1.98 citing each reference deemed most closely related to the subject matter of each of the claims;

6.2. an identification of all the limitations in the claims that are disclosed by the reference specifying where the limitation is disclosed in the cited reference;

6.3. a detailed explanation of how each of the claims is patentable over the references cited with particularity required by 37 CFR 1.111(b) and (c);

6.4. a concise statement of the utility of the invention as defined in each of the independent claims (unless the application is a design application);

6.5. a showing of where each limitation of the claims finds support under 35 USC 112, first paragraph, in the written description of the specification. If applicable, the showing must also identify: (1) each means- (or step) plus-function claim element that invokes consideration under 35 USC 112, sixth paragraph; and (2) the structure, material, or acts in the specification that corresponds to each means- (or step) plus-

function claim element that invokes consideration under 35 USC 112, sixth paragraph; if the application claims the benefit of one or more applications under title 35, United States Code, the showing must also include where each limitation of the claims finds support under 35 USC 112, first paragraph, in each such application in which such supports exists;

6.6. an identification of any cited references that may be disqualified under 35 USC 103(c).

REVIEW OF FACTS

The petition in this case fails to comply with condition I.3. At the time of filing, the application must be complete under 37 CFR 1.51 and in condition for examination. At the time of filing, the application was not complete because the abstract was not in compliance with 37 CFR 1.72(b) and 37 CFR 1.121 per the Notice to File Corrected Application Papers mailed May 21, 2008.

The petition fails to meet the required conditions to be accorded special status under the accelerated examination procedure. Given the above failure of conformance, which cannot now be remedied, the petition is denied.

If applicant elects to file again, the following issues should also be addressed:

It appears that both the Preexamination Search Statement and the Accelerated Examination Support Document are missing. Both documents are part of the required conditions to be accorded special status under Accelerated Examination Procedure (see conditions I.1 through I.4 and II.1 through II.6.6 above). Please visit http://www.uspto.gov/web/patents/accelerated/ for complete information on the Accelerated Examination Guidelines.

The petition fails to meet the required conditions to be accorded special status under the accelerated examination procedure.

DECISION

For the above stated reason, the petition is **DENIED**. The application will therefore be taken up by the examiner for action in its regular turn.

Any inquiry regarding this decision should be directed to Robert Weinhardt at (571) 272-6633, or C. Michelle Tarae at (571) 272-6727, both Business Practice Specialists.

Robert Weinhardt
Business Practice Specialist
Technology Center 3600

RW/CMT/8/27/08

UNITED STATES PATENT AND TRADEMARK OFFICE

UNITED STATES DEPARTMENT OF COMMERCE
United States Patent and Trademark Office
Address: COMMISSIONER FOR PATENTS
P.O. Box 1450
Alexandria, Virginia 22313-1450
www.uspto.gov

MHKKG / GLOBALFOUNDRIES
P.O. Box 398
Austin, TX 78767-0698

Mail Date: 04/20/2010

Applicant	: Patrick N. Conway	: DECISION ON REQUEST FOR
Patent Number	: 7669018	: RECALCULATION of PATENT
Issue Date	: 02/23/2010	: TERM ADJUSTMENT IN VIEW
Appliction No	: 12/118,818	: OF WYETH AND NOTICE OF INTENT TO
Filed	: 05/12/2008	: ISSUE CERTIFICATE OF CORRECTION
		:

The Request for Recalculation is **GRANTED** to the extent indicated.

The patent term adjustment has been determined to be **87** days. The USPTO will *sua sponte* issue a certificate of correction reflecting the amount of PTA days determined by the recalculation.

Prior to the issuance of the certificate of correction, the USPTO will afford patentee an opportunity to be heard and request reconsideration. Accordingly, patentee has **one month or thirty (30) days**, whichever is longer, to file a request for reconsideration of this patent term adjustment calculation. See 35 U.S.C. 154(b)(3)(B)(ii) and 37 CFR 1.322(a)(4). No extensions of time will be granted under 37 CFR 1.136.

Patentee should use document code PET.OP if electronically filing a request for reconsideration of this patent term adjustment calculation. The patentee must also include the information required by 37 CFR 1.705(b)(2) and the fee required by 37 CFR 1.18(e). If patentee does not file a timely request for reconsideration of this patent term adjustment calculation including the information required by 37 CFR 1.705(b)(2) and the fee required by 37 CFR 1.18(e), the USPTO will issue a certificate of correction reflecting the PTA determination noted above.

Patentee should be aware that in order to preserve the right to review in the United States District Court for the District of Columbia of the USPTO patent term adjustment determination, patentee must ensure that he or she also take the steps required under 35 U.S.C. 154(b)(4)(A) in a timely manner. Nothing in the request for recalculation should be construed as providing an alternative time frame for commencing a civil action under 35 U.S.C. 154(b)(4)(A).

Any questions concerning this decision should be directed to the Office of Patent Legal Administration at 571-272-7702.

UNITED STATES PATENT AND TRADEMARK OFFICE

Commissioner for Patents
United States Patent and Trademark Office
P.O. Box 1450
Alexandria, VA 22313-1450
www.uspto.gov

CST

March 11, 2010

In re application of Uwe Kolberg et al Serial No. 12/118,832 Filed: May 12, 2008 For: APPARATUS AND METHOD FOR THE PRODUCTION OF HIGH MELTING GLASS MATERIALS	: : : : : : :	DECISION ON REQUEST TO PARTICIPATE IN PATENT PROSECUTION HIGHWAY PROGRAM AND PETITION TO MAKE SPECIAL UNDER 37 CFR 1.102(d)

This is a decision on the request to participate in the Patent Prosecution Highway (PPH) program, filed January 12, 2010.

The request and petition are **DISMISSED**.

A grantable request to participate in the PPH program and petition to make special require:

(1) The U.S. application must validly claim priority under 35 U.S.C. 119(a) to one or more applications filed in the DPMA, note where the DPMA application with similar claims is not the same application from which the U.S. application claims priority that the applicant must identify the relationship between the DPMA application with similar claims and the DPMA priority application;

(2) Applicant must submit a copy of:
   a. The allowable/patentable claim(s) from the DPMA application(s) or if a copy of the allowable/patentable claims is available via the Dossier Access System (DAS) applicant may request the USPTO to obtain a copy from DAS; however, if the USPTO is unable to obtain a copy from the DAS, the applicant will be required to submit a copy;
   b. An English translation of the allowable/ patentable claim(s), if applicable; and
   c. A statement that the English translation is accurate, if applicable;

(3) Applicant must:
   a. Ensure all the claims in the U.S. application must sufficiently correspond or be amended to sufficiently correspond to the allowable/patentable claim(s) in the DPMA application(s); and
   b. Submit a claims correspondence table in English;

(4) Examination of the U.S. application has not begun;

(5) Applicant must submit:
   a. Documentation of prior office action:
      a copy of the office action(s) from each of the DPMA application(s) containing the allowable/patentable claims(s);
   b. An English language translation of the DPMA Office action; and
   c. A statement that the English translation is accurate;

(6) Applicant must submit:
   a. An IDS listing the documents cited by the DPMA examiner in the DPMA office action (unless already submitted in this application)
   b. Copies of documents except U.S. patents or U.S. patent application publications (unless already submitted in this application); and

(7) The required petition fee under 37 CFR 1.17(h).

The request to participate in the PPH program and petition fail because:

(3) All of the claims in the U.S. application must sufficiently correspond or be amended to sufficiently correspond to the allowable/patentable claim(s) in the DPMA application(s).

Several claims of the present application include the addition of the phrase "or raw material" to the term "shard material" which was examined in the DPMA application. See claims 1, 3, 4, 7 – 9 and 31. From the remarks presented in the Claims Correspondence Table, it appears that applicant says that the term "or raw material" was deleted from the DPMA claims, however instead, it appears that applicant has added this term to the claims of the present application.

Additionally, the term "ambient oxygenic atmosphere" which was indicated as allowable in the DPMA application, has been changed to the broader phrase "ambient atmosphere having a natural gas composition" in present claims 1 and 31. Thus, these claims do not appear to sufficiently correspond to the allowed claims of the DPMA application.

Also, the term "temperature is always below 1000 °C" has been broadened to "temperature is held below 1000 °C" in present claims 1, 2, 31 and 32.

(6) Applicant must submit:
   c. An IDS listing the documents cited by the DPMA examiner in the DPMA office action (unless already submitted in this application)
   d. Copies of documents except U.S. patents or U.S. patent application publications (unless already submitted in this application).

In a review of the DPMA office action provided by applicant, it appears that the documents cited by the DPMA have not been cited in an IDS in the current application, specifically, copies of DE 103 48 466 A1 and DE 199 39 781 A1 have not been provided, nor have these documents been listed on an IDS.

Any inquiry regarding this decision should be directed to Christine Tierney, Quality Assurance Specialist, at (571) 272-1055.

All other inquiries concerning the examination or status of the application is accessible in the PAIR system at http://www.uspto.gov/ebc/index.html.

/Christine Tierney/

Christine Tierney
Quality Assurance Specialist
Technology Center 1700

UNITED STATES PATENT AND TRADEMARK OFFICE

UNITED STATES DEPARTMENT OF COMMERCE
United States Patent and Trademark Office
Address: COMMISSIONER FOR PATENTS
P.O. Box 1450
Alexandria, Virginia 22313-1450
www.uspto.gov

APPLICATION NO.	FILING DATE	FIRST NAMED INVENTOR	ATTORNEY DOCKET NO.	CONFIRMATION NO.
12/118,832	05/12/2008	Uwe Kolberg	BLASP6367US	1859

23908 7590 04/22/2010
RENNER OTTO BOISSELLE & SKLAR, LLP
1621 EUCLID AVENUE
NINETEENTH FLOOR
CLEVELAND, OH 44115

EXAMINER

ART UNIT	PAPER NUMBER
1791	

MAIL DATE	DELIVERY MODE
04/22/2010	PAPER

Please find below and/or attached an Office communication concerning this application or proceeding.

The time period for reply, if any, is set in the attached communication.

UNITED STATES PATENT AND TRADEMARK OFFICE

Commissioner for Patents
United States Patent and Trademark Office
P.O. Box 1450
Alexandria, VA 22313-1450
www.uspto.gov

CST

April 22, 2010

In re application of Uwe Kolberg et al Serial No. 12/118,832 Filed: May 12, 2008 For: APPARATUS AND METHOD FOR THE PRODUCTION OF HIGH MELTING GLASS MATERIALS	: : : : : : :	DECISION ON REQUEST TO PARTICIPATE IN PATENT PROSECUTION HIGHWAY PROGRAM AND PETITION TO MAKE SPECIAL UNDER 37 CFR 1.102(d)

This is a decision on the supplemental request to participate in the Patent Prosecution Highway (PPH) program, filed March 25, 2010.

The request and petition are **GRANTED**.

A grantable request to participate in the PPH program and petition to make special require:

(1) The U.S. application must validly claim priority under 35 U.S.C. 119(a) to one or more applications filed in the DPMA, note where the DPMA application with similar claims is not the same application from which the U.S. application claims priority that the applicant must identify the relationship between the DPMA application with similar claims and the DPMA priority application;

(2) Applicant must submit a copy of:
   a. The allowable/patentable claim(s) from the DPMA application(s) or if a copy of the allowable/patentable claims is available via the Dossier Access System (DAS) applicant may request the USPTO to obtain a copy from DAS; however, if the USPTO is unable to obtain a copy from the DAS, the applicant will be required to submit a copy;
   b. An English translation of the allowable/ patentable claim(s), if applicable; and
   c. A statement that the English translation is accurate, if applicable;

(3) Applicant must:
   a. Ensure all the claims in the U.S. application must sufficiently correspond or be amended to sufficiently correspond to the allowable/patentable claim(s) in the DPMA application(s); and
   b. Submit a claims correspondence table in English;

(4) Examination of the U.S. application has not begun;

(5) Applicant must submit:
   a. Documentation of prior office action:
      a copy of the office action(s) from each of the DPMA application(s) containing the allowable/patentable claims(s);
   b. An English language translation of the DPMA Office action; and
   c. A statement that the English translation is accurate;

(6) Applicant must submit:
   a. An IDS listing the documents cited by the DPMA examiner in the DPMA office action (unless already submitted in this application)
   b. Copies of documents except U.S. patents or U.S. patent application publications (unless already submitted in this application); and

(7) The required petition fee under 37 CFR 1.17(h).

The request to participate in the PPH program and petition comply with the above requirements. Accordingly, the above-identified application has been accorded "special" status.

The application is being forwarded to the examiner for action on the merits commensurate with this decision.

Any inquiry regarding this decision should be directed to Christine Tierney, Quality Assurance Specialist, at (571) 272-1055.

All other inquiries concerning the examination or status of the application is accessible in the PAIR system at http://www.uspto.gov/ebc/index.html.

/Christine Tierney/

Christine Tierney
Quality Assurance Specialist
Technology Center 1700

UNITED STATES PATENT AND TRADEMARK OFFICE

Commissioner for Patents
United States Patent and Trademark Office
P.O. Box 1450
Alexandria, VA 22313-1450
www.uspto.gov

COPY MAILED

OCT 13 2009

OFFICE OF PETITIONS

MORGAN LEWIS & BOCKIUS LLP
1111 PENNSYLVANIA AVENUE NW
WASHINGTON DC 20004

In re Application of	:	
Jin Q. CHENG et al.	:	
Application No. 12/118,834	:	DECISION ON PETITION
Filed: May 12, 2008	:	
Attorney Docket No. 065031-5001-US-03	:	

This is a decision on the petition under the unintentional provisions of 37 CFR 1.137(b), filed September 21, 2009, to revive the above-identified application.

The petition is **GRANTED**.

The above-identified application became abandoned for failure to reply in a timely manner to the Notice to File Corrected Application Papers mailed January 07, 2009. The Notice set a period for reply of two (2) months from the mail date of the Notice. No extensions of time under the provisions of 37 CFR 1.136(a) were obtained. Accordingly, the application became abandoned on March 08, 2009.

The petition satisfies the conditions for revival pursuant to the provisions of 37 CFR 1.137(b) in that (1) the reply in the form of the required replacement drawings; (2) the petition fee of $1.620.00; and (3) the required statement of unintentional delay have been received. Accordingly, the reply to the Notice to File Corrected Application Papers of January 07, 2009 is accepted as having been unintentionally delayed.

An extension of time under 37 CFR 1.136 must be filed prior to the expiration of the maximum extendable period for reply. *See* In re Application of S., 8 USPQ2d 1630, 1631 (Comm'r Pats. 1988). Since the $1,175.00 extension of time fee submitted with the petition on September 21, 2009 was subsequent to the maximum extendable period for reply, this fee is unnecessary and will be credited to petitioner's deposit account.

Telephone inquiries concerning this decision should be directed to Michelle R. Eason at (571) 272-4231.

The application is being referred to the Office of Patent Application Processing.

Michelle R. Eason
Paralegal Specialist
Office of Petitions

UNITED STATES PATENT AND TRADEMARK OFFICE

UNITED STATES DEPARTMENT OF COMMERCE
United States Patent and Trademark Office
Address: COMMISSIONER FOR PATENTS
P.O. Box 1450
Alexandria, Virginia 22313-1450
www.uspto.gov

APPLICATION NO.	FILING DATE	FIRST NAMED INVENTOR	ATTORNEY DOCKET NO.	CONFIRMATION NO.
12/118,843	05/12/2008	YILDIRAY SAGER	SG051108-1001	1877

7590 08/25/2008
YILDIRAY SAGER
12 STANFORD TERRACE, FL.2
SOMERVILLE, MA 02143

EXAMINER
RODRIGUEZ, SAUL

ART UNIT	PAPER NUMBER
3652	

MAIL DATE	DELIVERY MODE
08/25/2008	PAPER

Please find below and/or attached an Office communication concerning this application or proceeding.

The time period for reply, if any, is set in the attached communication.

UNITED STATES PATENT AND TRADEMARK OFFICE

UNDER SECRETARY OF COMMERCE FOR INTELLECTUAL PROPERTY AND
DIRECTOR OF THE UNITED STATES PATENT AND TRADEMARK OFFICE
WASHINGTON, DC 20231
www.uspto.gov

MAILED FROM
DIRECTORS OFFICE
AUG 25 2008
TECHNOLOGY CENTER 3600 2800

Yildiray Sager
12 Stanford Terrace, FL.2
Somerville, MA 02143

In re application of Yildiray Sager Application No. 12/118,843 Filed: May 12, 2008 For: CRANE WITH 360 DEGREE ROTATION AND 3D MOVEMENT CAPABILITIES FOR FAST ASSET MANAGEMENT AND TRACKING	: : : : :	DECISION ON PETITION TO MAKE SPECIAL FOR NEW APPLICATION UNDER 37 CFR 1.102

This is a decision on the petition filed on May 12, 2008 to make the above-identified application special for accelerated examination procedure under 37 C.F.R. § 1.102(d).

The petition to make the application special is **DENIED.**

REGULATION AND PRACTICE

A grantable petition to make special under 37 C.F.R. § 1.102(d) and pursuant to the "Change to Practice for Petitions in Patent Applications to Make Special and for Accelerated Examination" published in the Federal Register on June 26, 2006 (71 Fed. Reg. 36323), must satisfy the following conditions:

I. Conditions Regarding the Application:

1. the application must be a non-reissue utility or design application filed under 37 CFR 1.111(a);

2. the application, the petition and the required fees must be filed electronically using the USPTO's electronic filing system (EFS), or EFS-web; if not filed electronically, a statement asserting that EFS and EFS-web were not available during the normal business hours;

3. at the time of filing, the application must be complete under 37 CFR 1.51 and in condition for examination;

4. the application must contain three or fewer independent claims and twenty or fewer total claims and the claims must be directed to a single invention.

II. Conditions Regarding the Petition:

The petition must:

1. be filed with the application;

2. include a statement that applicant agrees not to separately argue the patentability of any independent claim during any appeal in the application;

3. include a statement that applicant agrees to make an election without traverse in a telephone interview;

4. include a statement that applicant agrees to conduct such an interview when requested by the examiner;

5. include a statement, made based on a good faith belief, that a preexamination search in compliance with the following requirements, was conducted, including an identification of the field of search by United States class and subclass, where applicable, and for database searches, the search logic or chemical structure or sequence used as a query, the name of the file(s) searched and the database service, and the date of the search.

The preexamination search must:

5.1 involve U.S. patents and patent application publications, foreign patent documents, and non-patent literature, unless the applicant can justify with reasonable certainty that no references more pertinent than those already identified are likely to be found in the eliminated sources and includes such a justification with this statement;

5.2. be directed to the claimed invention and encompass all of the features of the claims, giving the claims the broadest reasonable expectation;

5.3. encompass the disclosed features that may be claimed.

6. must provide in support of the petition an accelerated examination support document.

An accelerated examination support document must include:

6.1. an information disclosure statement (IDS) in compliance with 37 CFR 1.98 citing each reference deemed most closely related to the subject matter of each of the claims;

6.2. an identification of all the limitations in the claims that are disclosed by the reference specifying where the limitation is disclosed in the cited reference;

6.3. a detailed explanation of how each of the claims are patentable over the references cited with particularity required by 37 CFR 1.111(b) and (c);

6.4. a concise statement of the utility of the invention as defined in each of the independent claims (unless the application is a design application);

6.5. a showing of where each limitation of the claims finds support under 35 USC 112, first paragraph, in the written description of the specification. If applicable, the showing must also identify: (1) each means- (or step) plus-function claim element that invokes consideration under 35 UDC 112, sixth paragraph; and (2) the structure, material, or acts in the specification that corresponds to each means- (or step) plus-

function claim element that invokes consideration under 35 UDC 112, sixth paragraph; if the application claims the benefit of one or more applications under title 35, United States Code, the showing must also include where each limitation of the claims finds support under 35 USC 112, first paragraph, in each such application in which such supports exists;

6.6. an identification of any cited references that may be disqualified under 35 USC 103(c).

REVIEW OF FACTS

The petition fails to comply with conditions I.3, above.

Because the application was filed without the statutory basic filing fee, and apparently with a claim listing and abstract not commencing on separate sheets, the application is considered to be incomplete under 37 CFR 1.51 as evidenced by the Notice of Missing Parts dated May 21, 2008.

Therefore, the petition fails to meet the required conditions to be accorded special status under the accelerated examination procedure. Given the above failure of filing a complete application, which can not now be remedied, the petition has not been further reviewed on the merits.

DECISION

For the above-stated reasons, the petition is **DENIED**. The application will therefore be taken up by the examiner for action in its regular turn. Further petitions for accelerated examination in this application will not be entertained.

Any inquiry regarding this decision should be directed to Teri P. Luu, Quality Assurance Specialist, at (571) 272-7045.

Teri P. Luu
Quality Assurance Specialist
Technology Center 3600

TL/tl: 08/22/08

UNITED STATES PATENT AND TRADEMARK OFFICE

UNITED STATES DEPARTMENT OF COMMERCE
United States Patent and Trademark Office
Address: COMMISSIONER FOR PATENTS
P.O. Box 1450
Alexandria, Virginia 22313-1450
www.uspto.gov

APPLICATION NO.	FILING DATE	FIRST NAMED INVENTOR	ATTORNEY DOCKET NO.	CONFIRMATION NO.
12/118,857	05/12/2008	Bhavna Agrawal	BUR9200800134US1	1900

46428 7590 09/09/2008
CANTOR COLBURN LLP-IBM BURLINGTON
20 Church Street
22nd Floor
Hartford, CT 06103

EXAMINER

ART UNIT	PAPER NUMBER
2825	

MAIL DATE	DELIVERY MODE
09/09/2008	PAPER

Please find below and/or attached an Office communication concerning this application or proceeding.

The time period for reply, if any, is set in the attached communication.

UNITED STATES PATENT AND TRADEMARK OFFICE

Commissioner for Patents
United States Patent and Trademark Office
P.O. Box 1450
Alexandria, VA 22313-1450
www.uspto.gov

CANTOR COLBURN LLP-IBM BURLINGTON
20 Church Street, 22nd Floor
Hartford, CT 06103

In re Application of: AGRAWAL *et al.* Serial No.: 12/118,857 Filed: May 12, 2008 Docket: **BUR9200800134US1** Title: **METHOD FOR ESTIMATING AGGREGATE LEAKAGE OF TRANSISTORS**	DECISION ON PETITION TO MAKE SPECIAL FOR NEW APPLICATION UNDER 37 C.F.R. § 1.102 & M.P.E.P. § 708.02

This is a decision on the petition filed on May 12, 2008, to make the above-identified application special for accelerated examination procedure under 37 C.F.R. § 1.102(d).

The petition to make the application special is GRANTED.

The application is eligible for accelerated examination and the petition complies with the conditions for granting the application special status pursuant to the "Change to Practice for Petitions in Patent Applications to Make Special and for Accelerated Examination" published June 26, 2006, in the Federal Register. (71 Fed. Reg. 36323).

The prosecution of the instant application will be conducted expeditiously according to the following guidelines.

1. The application will be docketed to an examiner and taken up for action within two weeks of the date of this decision.

2. Restriction Practice:
   If the examiner determines that the claims are not directed to a single invention, a telephone request to elect one single invention will be made pursuant to MPEP 812.01. As a prerequisite to the grant of this petition, the applicant has agreed to make an oral election, by telephone, without traverse. If the applicant refuses to make an election without traverse, or the examiner cannot reach the applicant after a reasonable effort, the examiner will treat the first claimed invention (invention defined by claim 1) as having being constructively elected without traverse for examination.

3. Office action:
   If it is determined that, after appropriate consultation, there is a potential rejection or any other issue to be addressed, the examiner will telephone the applicant and arrange an interview to discuss and resolve the issue. An Office action, other than a Notice of Allowance and Fee(s) Due (Notice of Allowance), will not be issued unless either: 1) an interview was conducted but did not result in agreed to action that places the application in condition for allowance, or, 2) a determination is made that an interview would be unlikely to result in the application being placed in condition for allowance, and 3) an internal conference has been held to review any rejection of any claim.

4. Time for Reply:
   An Office action other than a Notice of Allowance or a final Office action will set a shortened statutory period of one month or thirty days, whichever is longer, for reply with no extension of time available under 37 CFR 1.136(a). Failure to timely file a reply within this non-extendible period for reply will result in the abandonment of the application.

5. Reply by Applicant:
   A timely reply to an Office action other than the Notice of Allowance must be submitted electronically via EFS or EFS-web and limited to addressing the rejections, objections and requirement made. Any amendment that attempts to: 1) add claims which would result in more than three pending independent claims or more than twenty pending total claims; 2) present claims not encompassed by the pre-examination search or an updated accelerated examination support document; or 3) present claims that are directed a non-elected invention or an invention other than that previously claimed and examined in the application, will be treated as not fully responsive and will not be entered.

   For any amendment to the claims (including any new claim) that is not encompassed by the accelerated examination support document, applicant must provide an updated accelerated examination support document that encompasses the amended or new claims at the time of filing of the amendment.

   To proceed expeditiously with the examination, it is recommended that a reply with amendments made to any claim or with any new claim being added be accompanied by an updated accelerated examination support document or a statement explaining how the amended or new claim is supported by the original accelerated examination support document.

6. Information Disclosure Statement (IDS):
   Any IDS filed during prosecution must be submitted electronically via EFS or EFS-web, accompanied by an updated accelerated examination support document, and be in compliance with 37 CFR 1.97 and 1.98.

7. Post-Allowance Processing:
   To expedite processing of the allowed application into a patent, the applicant must: 1) pay the required fees within one month of the date of the Notice of Allowance, and 2) not file any post allowance papers not required by the Office. In no event may the issue fee be paid and accepted later than three months from the date of the Notice of Allowance.

8. After-Final and Appeal Procedures:
   To expedite prosecution, after receiving the final Office action, applicant must: 1) promptly file a notice of appeal, an appeal brief and appeal fees; and 2) not request a pre-appeal brief conference.

   Any amendment, affidavit or other evidence filed after final Office action must comply with applicable rules and the requirements outlined in numbered paragraphs 5 and 6 above.

   On appeal, the application will proceed according to normal appeal procedures. After appeal, the application will again be treated special.

9. Proceedings Outside the Normal Examination Process:
   If the application becomes involved in a proceeding that is outside the normal examination process (e.g., a secrecy order, national security review, interference proceeding, petitions under 37 CFR 1.181, 182 or 183), the application will be treated special before and after such proceeding.

10. Final Disposition:
    The twelve month goal of this accelerated examination procedure ends with a final disposition. The mailing of a final Office action, a Notice of Allowance, the filing of a Notice of Appeal, or the filing of a Request for Continued Examination (RCE) is the final disposition.

If, during prosecution, a paper is not filed electronically using EFS-web, a reply is filed but is not fully responsive, the application is involved in an appeal, or a proceeding outside normal examination process, the application will still be examined expeditiously, however, the final disposition may occur more than twelve months from the filing of the application.

Any inquiry regarding this decision should be directed to the undersigned at (571) 272-1594.

Clayton E. LaBalle, T-QAS
Technology Center 2800 - Semiconductors,
Electrical & Optical Systems & Components

UNITED STATES PATENT AND TRADEMARK OFFICE

Commissioner for Patents
United States Patent and Trademark Office
P.O. Box 1450
Alexandria, VA 22313-1450
www.uspto.gov

MORGAN LEWIS & BOCKIUS LLP
1111 PENNSYLVANIA AVENUE NW
WASHINGTON, DC 20004

COPY MAILED
MAR 15 2010

In re Application of	:	
Jin Q. CHENG, et *al.*	:	
Application No. 12/118,868	:	DECISION ON PETITION
Filed: May 12, 2008	:	UNDER 37 CFR 1.137(b)
Attorney Docket No. **101889-5005-06**	:	

This is a decision on the petition under the unintentional provisions of 37 CFR 1.137(b), filed December 29, 2009, to revive the above-identified application.

The petition is **GRANTED**.

The application became abandoned for failure to reply in a timely manner to the Notice to File Missing Parts (Notice), mailed January 7, 2009. The Notice set a period for reply of two (2) months from the mail date of the Notice. A five (5) month extension of time under the provisions of 37 CFR 1.136(a) was obtained. Accordingly, the application became abandoned on August 8, 2009.

It is not apparent whether the person signing the statement of unintentional delay was in a position to have firsthand or direct knowledge of the facts and circumstances of the delay at issue. Nevertheless, such statement is being treated as having been made as the result of a reasonable inquiry into the facts and circumstances of such delay. See 37 CFR 10.18(b) and Changes to Patent Practice and Procedure; Final Rule Notice, 62 Fed. Reg. 53131, 53178 (October 10, 1997), 1203 Off. Gaz. Pat. Office 63, 103 (October 21, 1997). In the event that such an inquiry has not been made, petitioner must make such an inquiry. If such inquiry results in the discovery that it is not correct that the entire delay in filing the required reply from the due date for the reply until the filing of a grantable petition pursuant to 37 CFR 1.137(b) was unintentional, petitioner must notify the Office.

There is no indication that the person signing the petition was ever given a power of attorney to prosecute the application. If the person signing the petition desires to receive future correspondence regarding this application, the appropriate power of attorney document must be submitted.

It is noted that on December 29, 2009, a Change of Correspondence Address was

submitted. Unfortunately, it could not be processed as it is not signed by an attorney of record. While a courtesy copy of this decision is being mailed to the person signing the petition, all future correspondence will be directed to the address currently of record until appropriate instructions are received.

The petition satisfies the requirements of 37 CFR 1.137(b) in that petitioner has supplied (1) the reply in the form of replacement drawings, (2) the petition fee of $810; and (3) an adequate statement of unintentional delay.

Telephone inquiries concerning this decision should be directed to Monica A. Graves at (571) 272-7253.

This application is being referred to the Office of Patent Examination Processing for appropriate action on the reply received December 29, 2009.

Thurman K. Page
Petitions Examiner
Office of Petitions

cc: **DEAN L. FANELLI**
FANELLI STRAIN & HAAG, PLLC
1455 PENNSYLVANIA AVENUE NW, SUITE 400
WASHINGTON, DC 20004

UNITED STATES PATENT AND TRADEMARK OFFICE

Commissioner for Patents
United States Patent and Trademark Office
P.O. Box 1450
Alexandria, VA 22313-1450
www.uspto.gov

TYCO HEALTHCARE GROUP LP
60 MIDDLETOWN AVENUE
NORTH HAVEN CT 06473

MAILED

MAY 18 2010

OFFICE OF PETITIONS

In re Application of	:	
Dominick L. MASTRI, et al	:	
Application No. 12/118,924	:	DECISION ON PETITION
Filed: May 12, 2008	:	
Attorney Docket No. 1695 CIP CON 8	:	

This is a decision on the petition under the unintentional provisions of 37 CFR 1.137(b), filed March 3, 2010, to revive the above-identified application.

The petition is **GRANTED**.

The application became abandoned for failure to timely pay the issue and publication fees on or before December 28, 2009. As required by the Notice of Allowance and Fee(s) Due, mailed September 25, 2009, which set a statutory period for reply of three (3) months. Accordingly, the application became abandoned on December 29, 2009.

The petition satisfies the requirements of 37 CFR 1.137(b) in that petitioner has supplied (1) the reply in the form of payment of the issue fee of $1510 and publication fee of $300; (2) the petition fee of $1620; and (3) and the required statement of unintentional delay.

Telephone inquiries concerning this decision should be directed to the undersigned at (571) 272-6735.

The application is being referred to the Office of Data Management for processing into a patent.

/dcg/
Diane C. Goodwyn
Petitions Examiner
Office of Petitions

UNITED STATES PATENT AND TRADEMARK OFFICE

Commissioner for Patents
United States Patent and Trademark Office
P.O. Box 1450
Alexandria, VA 22313-1450
www.uspto.gov

ARTHUR JACOB
25 EAST SALEM STREET
P.O. BOX 686
HACKENSACK, NJ 07602

COPY MAILED

JUN 24 2008

OFFICE OF PETITIONS

In re Application of	:	
Inbong PARK	:	
Application No. 12/118,927	:	DECISION ON PETITION
Filed: May 12, 2008	:	TO MAKE SPECIAL UNDER
Attorney Docket No. A-08.15	:	37 CFR 1.102(c)(1)
	:	

This is a decision on the petition under 37 CFR 1.102(c)(1), filed May 12, 2008, to make the above-identified application special based on applicant's age as set forth in M.P.E.P. § 708.02, Section IV.

The petition is **GRANTED**.

A grantable petition to make an application special under 37 CFR 1.102(c)(1) and MPEP § 708.02, Section IV: Applicant's Age must be accompanied by evidence showing that at least one of the applicants is 65 years of age, or more, such as a birth certificate or a statement by applicant. No fee is required

The instant petition includes a declaration statement signed by the applicant. Accordingly, the above-identified application has been accorded "special" status.

Telephone inquiries concerning this decision should be directed to the undersigned at 571-272-6735.

All other inquiries concerning either the examination or status of the application should be directed to the Technology Center.

The application is being forwarded to Technology Center Art Unit 3711 for action on the merits commensurate with this decision.

Diane Goodwyn
Petitions Examiner
Office of Petitions

UNITED STATES PATENT AND TRADEMARK OFFICE

Commissioner for Patents
United States Patent and Trademark Office
P.O. Box 1450
Alexandria, VA 22313-1450
www.uspto.gov

BLANK ROME LLP
WATERGATE
600 NEW HAMPSHIRE AVENUE, N.W.
WASHINGTON DC 20037

MAILED

JUL 22 2010

OFFICE OF PETITIONS

In re Application of	:	
Shields et al.	:	DECISION ON PETITION
Application No. 12/118,942	:	TO WITHDRAW
Filed: May 12, 2008	:	FROM RECORD
Attorney Docket No. 128503-00105	:	

This is a decision on the Request to Withdraw as attorney or agent of record under 37 C.F.R. § 1.36(b), filed on June 15, 2010.

The request is **NOT APPROVED**.

The Office no longer accepts address changes to a new practitioner or law firm filed with requests under 37 C.F.R. § 1.36(b). The Office will only accept correspondence address changes to the most current address information provided for the assignee of the entire interest *who properly became of record under 37 CFR 3.71,* or, if no assignee of the entire interest has properly been made of record, the most current address information provided for the first named inventor. 37 CFR 3.71(c) states:

> *An assignee becomes of record either in a national patent application or a reexamination proceeding by filing a statement in compliance with § 3.73(b) that is signed by a party who is authorized to act on behalf of the assignee.*

All future communications from the Office will be directed to above-listed address until otherwise properly notified by the applicant or a proper change of correspondence address have been submitted.

There are no outstanding Office actions that require a reply from the applicant.

Telephone inquires concerning this decision should be directed to the undersigned at (571) 272-6059. All other inquires concerning either the examination or status of the application should be directed to the Technology Center.

Alicia Kelley
Petitions Examiner
Office of Petitions

UNITED STATES PATENT AND TRADEMARK OFFICE

COMMISSIONER FOR PATENTS
UNITED STATES PATENT AND TRADEMARK OFFICE
P.O. BOX 1450
ALEXANDRIA, VA 22313-1450
www.uspto.gov
DIW Sep-08

GENERAL MILLS, INC.
P.O. BOX 1113
MINNEAPOLIS MN 55440

COPY MAILED

SEP 22 2008

OFFICE OF PETITIONS

In re Application of Domingues, Freeman, Garbe, Thurbush, Kackman, Kirk, Purkey, Sinclair, Stacey, and White Application Number: 12/118983 Filing Date: 05/12/2008 Attorney Docket Number: 6899US	DECISION REFUSING STATUS UNDER 37 CFR 1.47(a)

This is in response to the petition under 37 CFR 1.47(a) filed on July 31, 2008.

The petition is **DISMISSED**.

Rule 47 applicant is given TWO MONTHS from the mailing date of this decision to reply, correcting the below-noted deficiencies. Any reply should be entitled "Request for Reconsideration of Petition Under 37 CFR 1.47(a)," and should only address the deficiencies noted below, except that the reply may include an oath or declaration executed by the non-signing inventor. **FAILURE TO RESPOND WILL RESULT IN ABANDONMENT OF THE APPLICATION.** Extensions of time may be obtained in accordance with 37 CFR 1.136(a).

The above-identified application was filed on May 12, 2008, without an executed oath or declaration. Accordingly, on May 28, 2008, the Office of Patent Application Processing mailed a Notice to File Missing Parts of Nonprovisional Application requiring, *inter alia*, an executed oath or declaration and a surcharge for its late filing.

In response, on July 31, 2008 (certificate of mailing date July 28, 2008), the present petition was filed, accompanied by a declaration naming David J. Domingues, Richard Freeman, Joanne J. Garbe, Claire Thurbush, Scott Kackman, David A. Kirk, Todd Purkey, Kay Sinclair, Gary Stacey, and Matthew C. White, as joint inventors, signed by joint inventors Domingues, Garbe, Thurbush, Kackman, Kirk, and Purkey on behalf of themselves and non-signing inventors Freeman, Sinclair, Stacey, and White.

Petitioners assert, via the declaration of counsel's employee Kimberly A. Hayes, that a copy of the application was sent to inventor Matthew C. White, but that no response was received.

A grantable petition under 37 CFR 1.47(a) requires:

(1) proof that the non-signing inventor cannot be reached or located, notwithstanding diligent effort, or refuses to sign the oath or declaration after having been presented with the application papers (specification, claims and drawings);

(2) an acceptable oath or declaration in compliance with 35 U.S.C. §§ 115 and 116;

(3) the petition fee;

(4) a surcharge of $130 or $65 (small entity) if the petition and/or declaration is not filed at the time of filing the application, and

(5) a statement of the last known address of the non-signing inventors.

The petition lacks item (1).

In regards to item (1), petitioners have not shown that a copy of the application as filed (specification, including claims, drawings, if any, and the declaration) was sent to each of the non-signing inventors.[1] It is not sufficient to sent a copy of the application to only one inventor on behalf of the other non-signing inventors, rather, a copy of the application as filed must be sent to **each** non-signing inventor (or his or her counsel).

Petitioners may show proof that a copy of the application was sent or given to the non-signing inventors for review by providing a copy of the cover letter transmitting the application papers (specification, including claims, drawings, if any, and the declaration) to the non-signing inventor or details given in an affidavit or declaration of facts by a person having first-hand knowledge of the details.

Likewise, before a *bona fide* refusal to sign the declaration can be alleged, petitioners **must** show that a copy of the application was sent or given to the inventor. If the inventor refuses in writing, petitioners must submit a copy of that written refusal with any renewed petition. If the refusal was made orally to a person, then that person must provide details of the refusal in an affidavit or declaration of fact.

---

[1] MPEP 409.03(d).

Further correspondence with respect to this matter should be addressed as follows:

By mail: Mail Stop Petition
Commissioner for Patents
P.O. Box 1450
Alexandria, VA 22313-1450

By FAX: (571) 273-8300
Attn: Office of Petitions

By hand: Customer Service Window
Mail Stop Petition
Randolph Building
401 Dulany Street
Alexandria, VA 22314

Telephone inquiries related to this decision should be directed to the undersigned at 571-272-3231.

D Wood

Douglas I. Wood
Senior Petitions Attorney
Office of Petitions

UNITED STATES PATENT AND TRADEMARK OFFICE

Commissioner for Patents
United States Patent and Trademark Office
P.O. Box 1450
Alexandria, VA 22313-1450
www.uspto.gov
DIW Dec-08

GENERAL MILLS, INC.
P.O. BOX 1113
MINNEAPOLIS MN 55440

COPY MAILED

DEC 15 2008

OFFICE OF PETITIONS

In re Application of	:
Domingues et al.	: DECISION NOTING JOINDER
Application Number: 12/118983	: OF INVENTOR AND PETITION
Filing Date: 05/12/2008	: UNDER 37 CFR 1.47(a) MOOT
Attorney Docket Number: 6899US	:

Papers filed on November 25, 2008 (certificate of mailing date November 21, 2008), in response to the decision dismissing petition mailed on September 22, 2008, included a Declaration signed by the previously non-signing inventors, in compliance with 37 CFR 1.63.

The petition is **dismissed as moot**.

In view of the joinder of the inventors, further consideration under 37 CFR 1.47(a) is moot; this application does not have any rule 1.47(a) status and no such status should appear on the file wrapper. This application need not be returned to this office for any further consideration under 37 CFR 1.47(a).

This application will be referred to Technology Center Art Unit 1794 for examination in due course.

Telephone inquiries related to this decision should be directed to the undersigned at (571) 272-3231.

D Wood

Douglas I. Wood
Senior Petitions Attorney
Office of Petitions

UNITED STATES PATENT AND TRADEMARK OFFICE

Commissioner for Patents
United States Patent and Trademark Office
P.O. Box 1450
Alexandria, VA 22313-1450
www.uspto.gov

BROUSE MCDOWELL LPA
388 SOUTH MAIN STREET
SUITE 500
AKRON OH 44311

COPY MAILED

AUG 18 2008

In re Application of
STUCHELL, Bart
Application No. 12/119,004
Filed: May 12, 2008
Attorney Docket No. **23613.46918**

DECISION ON PETITION
TO WITHDRAW
FROM RECORD

This is a decision on the Request to Withdraw as attorney or agent of record under 37 C.F.R. § 1.36(b), filed July 25, 2008.

The request is **APPROVED**.

A grantable request to withdraw as attorney/agent of record must be signed by every attorney/agent seeking to withdraw or contain a clear indication that one attorney is signing on behalf of another/others. The Office requires the practitioner(s) requesting withdrawal to certify that he, she, or they have: (1) given reasonable notice to the client, prior to the expiration of the response period, that the practitioner(s) intends to withdraw from employment; (2) delivered to the client or a duly authorized representative of the client all papers and property (including funds) to which the client is entitled; and (3) notified the client of any responses that may be due and the time frame within which the client must respond, pursuant 37 CFR 10.40(c).

The request was signed by John Skeriotis on behalf of all attorneys of record who are associated with customer No. 26781. All attorneys/agents associated with the Customer Number 26781 have been withdrawn. Applicant is reminded that there is no attorney of record at this time.

The request to change the correspondence address of record is not acceptable as the requested correspondence address is not that of: (1) the first named signing inventor; or (2) an intervening assignee of the entire interest under 37 C.F.R 3.71. All future communications from the Office will be directed to the first named signing inventor at the first copied address below until otherwise properly notified by the applicant.

In order to request or take action in a patent matter, the assignee must establish its ownership of the patent to the satisfaction of the Director. In this regard, a Statement under 37 CFR 3.73(b) must have either: (i) documentary evidence of a chain of title from the original owner to the assignee

(e.g., copy of an executed assignment), and a statement affirming that the documentary evidence of the chain of title from the original owner to the assignee was or concurrently is being submitted for recordation pursuant to § 3.11; or (ii) a statement specifying where documentary evidence of a chain of title from the original owner to the assignee is recorded in the assignment records of the Office (e.g., reel and frame number).

Telephone inquiries concerning this decision should be directed to Tredelle Jackson at 571-272-2783.

Tredelle D. Jackson

Tredelle D. Jackson
Paralegal Specialist
Office of Petitions

cc: **BART STUCHELL**
11773 AEBI AVENUE
ALLIANCE OH 44601

cc: **BUCKINGHAM DOOLITTLE & BURROUGHS, LLP**
3800 EMBASSY PARKWAY
SUITE 300
AKRON OH 44333

UNITED STATES PATENT AND TRADEMARK OFFICE

Commissioner for Patents
United States Patent and Trademark Office
P.O. Box 1450
Alexandria, VA 22313-1450
www.uspto.gov

ERIC E. GRONDAHL, ESQ.
MCCARTER & ENGLISH, LLP
185 ASYLUM STREET, CITY PLACE 1
HARTFORD, CT 06103-3495

COPY MAILED

MAR 0 9 2009

OFFICE OF PETITIONS

In re Application of	:	
Raffaele SALFI, et al	:	
Application No. 12/119,091	:	DECISION ON PETITION
Filed: May 12, 2008	:	TO WITHDRAW
Attorney Docket No. 97353.00126	:	FROM RECORD
	:	

This is a decision on the Request to Withdraw as attorney or agent under 37 C.F.R. § 1.36(b) filed February 11, 2009.

The request is **NOT APPROVED**.

A review of the file record indicates that Eric E. Grondahl, Esq. does not have power of attorney in this patent application. See 37 C.F.R. § 10.40. Accordingly, the request to withdraw under 37 C.F.R. § 1.36(b) is not applicable.

All future communications from the Office will to be directed to the address indicated below until otherwise properly notified by the applicant.

Telephone inquires concerning this decision should be directed to the undersigned at 571-272-6735.

Diane Goodwyn
Petitions Examiner
Office of Petitions

cc: BOLESHI J. SKUTNIK PHD. JD
515 SHAKER ROAD
EAST LONGMEADOW, MA 01028

UNITED STATES PATENT AND TRADEMARK OFFICE

Commissioner for Patents
United States Patent and Trademark Office
P.O. Box 1450
Alexandria, VA 22313-1450
www.uspto.gov

MAILED

MAR 01 2010

OFFICE OF PETITIONS

IOVATE HEALTH SCIENCE RESEARCH INC.
381 North Service Road West
Oakville ON L6M 0H4 CA CANADA

In re Application of :
Clement, et al. : DECISION ON PETITION
Application No. 12/119,124 :
Filed: May 12, 2008 :
Atty. Dkt. No.: 7.00030(US-CIP) :

This decision is in response to the petition to withdraw the holding of abandonment under 37 CFR 1.181 and the alternative petition under 37 CFR 1.137(b) for revival of unintentionally abandoned application, filed February 26, 2009.

The application became abandoned July 28, 2008 for failure to timely submit a proper reply to the Notice to File Missing Parts of Nonprovisional Application (Notice) mailed May 27, 2008. The Notice set a two month shortened statutory period of time for reply. Notice of Abandonment was mailed February 5, 2009.

DECISION UNDER 37 CFR 1.181

Petitioners assert that the application was filed May 12, 2008 without an executed oath or declaration. Petitioners state that an executed declaration was filed May 26, 2008. Petitioners contend that the Notice mailed May 27, 2008 crossed in the mail with the declaration submitted May 26, 2008. Thus, petitioners contend that the Notice was mailed in error and should be withdrawn. Petitioners contend that applicants' representative who filed the application and the declaration is no longer employed by applicants. Petitioners herein believe that because the declaration required by the Notice had already been submitted, applicants' representative believed applicants had fully complied and that no further response to the Notice was required.

The record establishes that a declaration was filed May 26, 2008 and that the Notice was mailed May 27, 2008. However, the USPTO must rely on the actions or inactions of duly authorized and voluntarily chosen representatives of the applicants, and petitioners are bound by the consequences of those actions or inactions. Link v. Wabash, 370 U.S. 626, 633-34 (1962); Huston v. Ladner, 973 F.2d 1564, 1567, 23 USPQ2d 1910, 1913 (Fed. Cir. 1992); see, also, Haines v. Quigg, 673 F. Supp. 314, 317, 5 USPQ2d 1130, 1132 (D.N. Ind. 1987); Stevens v. Tamai, 366 F.3d 1325 (Fed. Cir. 2004) (court denying priority due to counsel's admitted failure to follow the Rules of Practice of the USPTO); Gustafson v. Strange, 227 USPQ 174 (Comm'r Pats. 1985)(counsel's unawareness of 37 CFR 1.8 not extraordinary situation warranting waiver of a rule).

Thus, failure to submit a timely reply to the Notice because applicants' representative did not believe that a reply to the Notice was necessary is not grounds for the withdrawal of the holding of abandonment.

Moreover, the Notice clearly set a time period for reply. Absent withdrawal of the Notice by the USPTO, applicant was required to submit a timely reply. Failure by applicant of a patent application to reply within the time period provided under § 1.134 and § 1.136 results in abandonment of the application as a matter of law. See, 37 CFR 1.135(a).

Accordingly, the petition under 37 CFR 1.181 to withdraw the holding of abandonment is hereby DISMISSED.

DECISION UNDER 37 CFR 1.137(b)

Petitioners alternatively argue that the failure to timely submit a proper reply to the Notice was unintentional.

A grantable petition under 37 CFR 1.137(b) must be accompanied by: (1) the required reply, unless previously filed; (2) the petition fee as set forth in 37 CFR 1.17(m); (3) a statement that the entire delay in filing the required reply from the due date for the reply until the filing of a grantable petition pursuant to 37 CFR 1.137(b) was unintentional; and (4) any terminal disclaimer (and fee as set forth in 37 CFR 1.20(d)) required by 37 CFR 1.137(d). Where there is a question as to whether either the abandonment or the delay in filing a petition under 37 CFR 1.137 was unintentional, the Director may require additional information. See MPEP 711.03(c)(II)(C) and (D).

As to item (2) set forth above, the required petition fee has been charged to Deposit Account No. 50-3983, as authorized.

As to (3) set forth above, 37 CFR 1.137(b)(3) requires a statement that "the entire delay in filing the required reply from the due date for the reply until the filing of a grantable petition pursuant to 37 CFR 1.137(b) was unintentional." Since the statement appearing in the petition varies from the language required by 37 CFR 1.137(b)(3), the statement is being construed as the required statement. Petitioner must notify the Office if this is **not** a correct reading of the statement appearing in the petition.

The instant petition has been carefully reviewed and found in compliance with the requirements set forth above.

In view thereof, the petition under 37 CFR 1.137(b) is hereby **GRANTED**.

There is no indication that the petition is signed by a registered patent attorney or patent agent of record. However, in accordance with 37 CFR 1.34, practitioner's signature appearing on the correspondence shall constitute a representation to the United States Patent and Trademark Office that he is authorized to represent the particular party in whose behalf he acts. If,

practitioner desires to be made of record regarding this application, the appropriate power of attorney documents must be submitted.

This application is being directed to the Office of Patent Application Processing for further processing.

Telephone inquiries concerning this matter may be directed to the undersigned at (571) 272-3205.

/ALESIA M. BROWN/

Alesia M. Brown
Petitions Attorney
Office of Petitions

UNITED STATES PATENT AND TRADEMARK OFFICE

Commissioner for Patents
United States Patent and Trademark Office
P.O. Box 1450
Alexandria, VA 22313-1450
www.uspto.gov

TEXAS INSTRUMENTS INCORPORATED
P O BOX 655474, M/S 3999
DALLAS, TX 75265

COPY MAILED
JAN 2 0 2009

In re Application of Tiwari et al. :
Application No. 12/119,187 : Decision on Petition
Filing Date: May 12, 2008 :
Attorney Docket No. TI-36211.1 :

This is a decision in response to the petition filed July 22, 2008, which requests the application be accorded a filing date of May 12, 2008, and requests entry of the drawings and abstract filed July 22, 2008.

The petition is **granted**.

Application papers were filed May 12, 2008.

The Office of Patent Examination Processing mailed a "Notice of Incomplete Nonprovisional Application" on July 3, 2008. The Notice stated drawings and an abstract did not appear to be part of the application as filed and that the application had not been accorded a filing date.

In response, applicants timely filed this petition.

Petitioner has supplied an amendment to add the inadvertently omitted drawings and abstract. Petitioner asserts "the inadvertently omitted Drawings and Abstract are completely contained in [Application No. 10/663,948]." The second sentence of the specification filed May 12, 2008, explicitly incorporates by reference Application No. 10/663,948.

Petitioner requests the amendment be entered and the application be accorded a filing date of May 12, 2008.

For applications filed on or after September 21, 2004, one may add inadvertently omitted material needed for a filing date to an application and be accorded a filing date as of the original date of deposit of the application paper upon the filing of a grantable petition under 37 CFR 1.57(a)(3).

In order to obtain relief under 37 CFR 1.57(a)(3), one must,

(1) submit the petition fee set forth in 37 CFR 1.17(f),
(2) demonstrate the originally filed application papers included a claim for priority under 37 CFR 1.55 or 37 CFR 1.78,

(3) identify where the inadvertently omitted material can be found in a prior-filed application,
(4) demonstrate the omitted material is "completely contained" in a prior application,
(5) file an amendment to add the inadvertently omitted material,
(6) supply a copy of the prior-filed application, except where the prior-filed application is an application filed under 35 U.S.C. 111,
(7) supply an English language translation of any prior-filed application that is in a language other than English, and
(8) comply with the time requirements set forth in 37 CFR 1.57(g).

Petitioner has satisfied the requirements set forth above.

The Office of Patent Examination Processing will be informed of the instant decision and will process the application with a filing date of May 12, 2008, using the papers filed on May 12, 2008, and the drawings and abstract filed July 22, 2008.

Telephone inquiries regarding this communication should be directed to Petitions Attorney Steven Brantley at (571) 272-3203.

Anthony Knight
Supervisor
Office of Petitions

UNITED STATES PATENT AND TRADEMARK OFFICE

Commissioner for Patents
United States Patent and Trademark Office
P.O. Box 1450
Alexandria, VA 22313-1450
www.uspto

PROTEOTECH, INC.
12040 115TH AVE. NE
KIRKLAND WA 98034-6931

COPY MAILED

DEC 29 2009

OFFICE OF PETITIONS

In re Application of	:
Gerardo Castillo et al	:
Application No. 12/119,212	: DECISION ON PETITION
Filed: May 12, 2008	: UNDER 37 CFR 1.78(a)(3)
Attorney Docket No. P27C1	:

This is a decision on the petition under 37 CFR 1.78(a)(3), filed October 5, 2009, to accept an unintentionally delayed claim under 35 U.S.C. § 120 for the benefit of priority to the prior-filed nonprovisional applications set forth in the amendment filed with the petition.

The petition is **DISMISSED**.

A petition for acceptance of a claim for late priority under 37 CFR 1.78(a)(3) is only applicable to those applications filed on or after November 29, 2000. Further, the petition is appropriate only after the expiration of the period specified in 37 CFR 1.78(a)(2)(ii). In addition, the petition under 37 CFR 1.78(a)(3) must be accompanied by:

(1) the reference required by 35 U.S.C. § 120 and 37 CFR 1.78(a)(2)(i) of the prior-filed application, unless previously submitted;
(2) the surcharge set forth in § 1.17(t); and
(3) a statement that the entire delay between the date the claim was due under 37 CFR 1.78(a)(2)(ii) and the date the claim was filed was unintentional. The Director may require additional information where there is a question whether the delay was unintentional.

The petition does not satisfy item (1) above.

The reference to add the above-noted, prior-filed applications in the first sentence of the specification on page one following the title is not acceptable as drafted since it improperly incorporates by reference the prior-filed applications. An incorporation by reference statement added after an application's filing date is not effective because no new matter can be added to an application after its filing date (*see* 35 U.S.C. § 132(a)). If an incorporation by reference statement is included in an amendment to the specification to add a benefit claim under 35 U.S.C. § 120 after

the filing date of the application, the amendment would not be proper. When a benefit claim under 35 U.S.C. § 120 is submitted after the filing of an application, the reference to the prior application cannot include an incorporation by reference statement of the prior application. *See* Dart Industries v. Banner, 636 F.2d 684, 207 USPQ 273 (C.A.D.C. 1980). *Note* MPEP §§ 201.06(c) and 608.04(b).

If reconsideration of this decision is desired, a renewed petition under 37 CFR § 1.78(a)(3) and an Application Data Sheet or an amendment (complying with the provisions of 37 CFR 1.121 and 37 CFR 1.76(b)(5)) deleting the incorporation by reference statement to Application Nos. 12/470,374 and 10/077,596 are required.

Further correspondence with respect to this matter should be delivered through one of the following mediums:

By mail:	Mail Stop PETITIONS Commissioner for Patents Post Office Box 1450 Alexandria, VA 22313-1450
By hand:	Customer Service Window Mail Stop Petitions Randolph Building 401 Dulany Street Alexandria, VA 22314
By fax:	(571) 273-8300 ATTN: Office of Petitions
By internet:	EFS-Web www.uspto.gov/ebc/efs_help.html (for help using EFS-Web call the Patent Electronic Business Center at (866) 217-9197)

Any questions concerning this matter may be directed to the undersigned at (571) 272-3208.

/KOC/
Karen Creasy
Petitions Examiner
Office of Petitions

UNITED STATES PATENT AND TRADEMARK OFFICE

Commissioner for Patents
United States Patent and Trademark Office
P.O. Box 1450
Alexandria, VA 22313-1450
www.uspto.gov

PROTEOTECH, INC.
12040 115TH AVE NE
KIRKLAND WA 98034-6931

COPY MAILED
FEB 25 2010

In re Application of	:	
Gerardo Castillo et al	:	
Application No. 12/119,212	:	DECISION ON PETITION
Filed: May 12, 2008	:	UNDER 37 CFR 1.78(a)(3)
Attorney Docket No. P27C1	:	

This is a decision on the renewed petition under 37 CFR 1.78(a)(3), filed January 21, 2010, to accept an unintentionally delayed claim under 35 U.S.C. §120 for the benefit of priority to the prior-filed nonprovisional applications set forth in the concurrently filed amendment.

The petition is **DISMISSED.**

A petition for acceptance of a claim for late priority under 37 CFR 1.78(a)(3) is only applicable to those applications filed on or after November 29, 2000. Further, the petition is appropriate only after the expiration of the period specified in 37 CFR 1.78(a)(2)(ii). In addition, the petition under 37 CFR 1.78(a)(3) must be accompanied by:

(1) the reference required by 35 U.S.C. § 120 and 37 CFR 1.78(a)(2)(i) of the prior-filed application, unless previously submitted;
(2) the surcharge set forth in § 1.17(t); and
(3) a statement that the entire delay between the date the claim was due under 37 CFR 1.78(a)(2)(ii) and the date the claim was filed was unintentional. The Director may require additional information where there is a question whether the delay was unintentional.

The petition does not comply with item (1)

37 CFR 1.78(a)(2)(i) requires that any nonprovisional application claiming the benefit of one or more prior-filed copending nonprovisional applications must contain or be amended to contain a reference to each such prior-filed application, identifying it by application number (consisting of the series code and serial number) and indicating the relationship of the applications. The relationship between the applications is whether the subject application is a continuation,

divisional, or continuation-in-part of a prior-filed nonprovisional application. An example of a proper benefit claim is: "This application is a continuation of Application No. 10/---, filed---." A benefit claim that merely states: "This application claims the benefit of Application No. 10/---, filed---," does not comply with 37 CFR 1.72(a)(2)(i) since the proper relationship, which includes the type of continuing application, is not stated. Also, the status of each nonprovisional parent application (if it is patented or abandoned) should also be indicated, following the filing date of the parent nonprovisional application. *See* MPEP Section 201.11, Reference to Prior Nonprovisional Applications. **The amendment fails to state the relationship of Application No. 12/470,374 to the instant application.**

Before the petition under 37 CFR § 1.78(a)(3) can be granted, a renewed petition under 37 CFR § 1.78(a)(3) an Application Data Sheet or a substitute amendment (complying with 37 CFR 1.121 and 37 CFR 1.76(b)(5)), which states the relationship of Application No. 12/470,374 to the instant application, is required.

Further correspondence with respect to this matter should be delivered through one of the following mediums:

By mail:	Mail Stop PETITIONS Commissioner for Patents Post Office Box 1450 Alexandria, VA 22313-1450
By hand:	Customer Service Window Mail Stop Petitions Randolph Building 401 Dulany Street Alexandria, VA 22314
By fax:	(571) 273-8300 ATTN: Office of Petitions
By internet:	EFS-Web www.uspto.gov/ebc/efs_help.html (for help using EFS-Web call the Patent Electronic Business Center at (866) 217-9197)

Any questions concerning this matter may be directed to the undersigned at (571) 272-3208.

/KOC/
Karen Creasy
Petitions Examiner
Office of Petitions

UNITED STATES PATENT AND TRADEMARK OFFICE

Commissioner for Patents
United States Patent and Trademark Office
P.O. Box 1450
Alexandria, VA 22313-1450
www.uspto.gov

MAILED

MAY 04 2010

OFFICE OF PETITIONS

PROTEOTECH, INC.
12040 115TH AVE NE
KIRKLAND WA 98034-6931

In re Application of	:	
Gerardo Castillo et al	:	
Application No. 12/119,212	:	DECISION ON PETITION
Filed: May 12, 2008	:	UNDER 37 CFR 1.78(a)(3)
Attorney Docket No. P27C1	:	

This is a decision on the renewed petition under 37 CFR 1.78(a)(3), filed March 18, 2010, to accept an unintentionally delayed claim under 35 U.S.C. §120 for the benefit of priority to the prior-filed nonprovisional applications set forth in the concurrently filed amendment.

The petition is **DISMISSED.**

A petition for acceptance of a claim for late priority under 37 CFR 1.78(a)(3) is only applicable to those applications filed on or after November 29, 2000. Further, the petition is appropriate only after the expiration of the period specified in 37 CFR 1.78(a)(2)(ii). In addition, the petition under 37 CFR 1.78(a)(3) must be accompanied by:

(1) the reference required by 35 U.S.C. § 120 and 37 CFR 1.78(a)(2)(i) of the prior-filed application, unless previously submitted;
(2) the surcharge set forth in § 1.17(t); and
(3) a statement that the entire delay between the date the claim was due under 37 CFR 1.78(a)(2)(ii) and the date the claim was filed was unintentional. The Director may require additional information where there is a question whether the delay was unintentional.

The petition does not comply with item (1).

The amendment submitted on March 18, 2010, states that this application is a continuation-in-part of Application No. 12/470,374. However, the above Application No. 12/119,212 was filed on May 12, 2008, whereas, Application No. 12/470,374 was filed on May 21, 2009. Therefore,

the reference is improper since Application No. 12/119,212 was filed prior to the filing of Application No. 12/470,374.

Before the petition under 37 CFR § 1.78(a)(3) can be granted, a renewed petition under 37 CFR § 1.78(a)(3) an Application Data Sheet or a substitute amendment (complying with 37 CFR 1.121 and 37 CFR 1.76(b)(5)), to correct the above matter is, is required.

Further correspondence with respect to this matter should be delivered through one of the following mediums:

By mail:	Mail Stop PETITIONS Commissioner for Patents Post Office Box 1450 Alexandria, VA 22313-1450
By hand:	Customer Service Window Mail Stop Petitions Randolph Building 401 Dulany Street Alexandria, VA 22314
By fax:	(571) 273-8300 ATTN: Office of Petitions
By internet:	EFS-Web (for help using EFS-Web call the Patent Electronic Business Center at (866) 217-9197)

Any questions concerning this matter may be directed to the undersigned at (571) 272-3208.

/KOC/
Karen Creasy
Petitions Examiner
Office of Petitions

UNITED STATES PATENT AND TRADEMARK OFFICE

Commissioner for Patents
United States Patent and Trademark Office
P.O. Box 1450
Alexandria, VA 22313-1450
www.uspto.gov

DANN, DORFMAN, HERRELL & SKILLMAN
1601 MARKET STREET
SUITE 2400
PHILADELPHIA PA 19103-2307

MAILED

MAR 06 2009

OFFICE OF PETITIONS

In re Application of	:	
Kragl et al.	:	
Application No. 12/119,214	:	DECISION ON PETITION
Filed: May 12, 2008	:	
Attorney Docket No. Merck-3467-C01	:	

This is a decision on the petition under 37 CFR 1.182, filed, February 2, 2009, to change the name of inventor "Sonja Schofer" to – Sonja Fliege --.

The petition is **GRANTED**.

Office records have been updated to reflect the inventor's change of name. A corrected Filing Receipt, which reflects the inventor's change of name, accompanies this decision on petition.

The $400.00 petition fee has been assessed.

A proper change of address should be filed in accordance with MPEP 601.03. The change of address has not been entered because the Power of Attorney and Correspondence Address Indication Form indicates that Dr. Schmidt-Grobmann is the inventor/applicant. Further petitioner contends that a statement under 37 CFR 3.73(b) has been submitted. However, the Office is not in receipt of such statement. In addition to submitting a statement specifying, by reel and frame number, where such evidence (assignment documents) is recorded in the Office; a statement under 37 CFR 3.73(b) requires that the document establishing ownership by the assignee must be signed by a party who is authorized to act on behalf of the assignee. This statement has not been provided. Even if the Office construed the Response to Denial of Request For Power of Attorney submitted on February 25, 2009 as a statement under 37 CFR 3.73(b), the document is not signed by a party who states that he is authorized to act on behalf of the assignee or signed by a person with apparent authority. The power of attorney in this instance is a separate document from any document, which may be construed as a statement under 37 CFR 3.73(b) statement. A courtesy copy of this decision is being mailed to the address given on the petition; however, the Office will mail all future correspondence solely to the address of record.

Any questions concerning this matter may be directed to the undersigned at (571) 272-3215. Any questions concerning the examination procedures or status of the application should be directed to the Technology Center.

This application is being referred to Art Unit 1652 for examination in due course.

Charlema Grant
Petitions Attorney
Office of Petitions

ATTACHMENT: Corrected Filing Receipt

Cc: Millen, White Zelano & Branigan, P.C., Arlington Courthouse Plaza 1, Suite 1400, 2200 Clarendon Blvd, Arlington, Virginia 22201

UNITED STATES PATENT AND TRADEMARK OFFICE

UNITED STATES DEPARTMENT OF COMMERCE
United States Patent and Trademark Office
Address: COMMISSIONER FOR PATENTS
P.O. Box 1450
Alexandria, Virginia 22313-1450
www.uspto.gov

APPLICATION NUMBER	FILING or 371(c) DATE	GRP ART UNIT	FIL FEE REC'D	ATTY.DOCKET.NO	TOT CLAIMS	IND CLAIMS
12/119,214	05/12/2008	1652	1030	MERCK-3467-C01	13	3

CONFIRMATION NO. 2595

CORRECTED FILING RECEIPT

23599
MILLEN, WHITE, ZELANO & BRANIGAN, P.C.
2200 CLARENDON BLVD.
SUITE 1400
ARLINGTON, VA 22201

OC000000034875127

Date Mailed: 03/06/2009

Receipt is acknowledged of this non-provisional patent application. The application will be taken up for examination in due course. Applicant will be notified as to the results of the examination. Any correspondence concerning the application must include the following identification information: the U.S. APPLICATION NUMBER, FILING DATE, NAME OF APPLICANT, and TITLE OF INVENTION. Fees transmitted by check or draft are subject to collection. Please verify the accuracy of the data presented on this receipt. **If an error is noted on this Filing Receipt, please submit a written request for a Filing Receipt Correction. Please provide a copy of this Filing Receipt with the changes noted thereon. If you received a "Notice to File Missing Parts" for this application, please submit any corrections to this Filing Receipt with your reply to the Notice. When the USPTO processes the reply to the Notice, the USPTO will generate another Filing Receipt incorporating the requested corrections**

Applicant(s)

Udo Kragl, Kritzmow, GERMANY;
Nicole Kaftzik, Brohl, GERMANY;
Sonja Fliege, Langenfeld, GERMANY;
Peter Wasserscheid, Koeln, GERMANY;

Power of Attorney: The patent practitioners associated with Customer Number 23599

Domestic Priority data as claimed by applicant

This application is a CON of 11/440,321 05/23/2006 ABN
which is a CON of 10/416,067 01/02/2004 ABN
which is a 371 of PCT/EP01/12869 11/07/2001

Foreign Applications

EUROPEAN PATENT OFFICE (EPO) 00124195.9 11/08/2000

Request to Retrieve - This application either claims priority to one or more applications filed in an intellectual property Office that participates in the Priority Document Exchange (PDX) program or contains a proper **Request to Retrieve Electronic Priority Application(s)** (PTO/SB/38 or its equivalent). Consequently, the USPTO will attempt to electronically retrieve these priority documents.

If Required, Foreign Filing License Granted: 08/21/2008

The country code and number of your priority application, to be used for filing abroad under the Paris Convention, is **US 12/119,214**

Projected Publication Date: Not Applicable

Non-Publication Request: No

Early Publication Request: No
Title

ENZYME CATALYSIS IN THE PRESENCE OF IONIC LIQUIDS

Preliminary Class

435

PROTECTING YOUR INVENTION OUTSIDE THE UNITED STATES

Since the rights granted by a U.S. patent extend only throughout the territory of the United States and have no effect in a foreign country, an inventor who wishes patent protection in another country must apply for a patent in a specific country or in regional patent offices. Applicants may wish to consider the filing of an international application under the Patent Cooperation Treaty (PCT). An international (PCT) application generally has the same effect as a regular national patent application in each PCT-member country. The PCT process **simplifies** the filing of patent applications on the same invention in member countries, but **does not result** in a grant of "an international patent" and does not eliminate the need of applicants to file additional documents and fees in countries where patent protection is desired.

Almost every country has its own patent law, and a person desiring a patent in a particular country must make an application for patent in that country in accordance with its particular laws. Since the laws of many countries differ in various respects from the patent law of the United States, applicants are advised to seek guidance from specific foreign countries to ensure that patent rights are not lost prematurely.

Applicants also are advised that in the case of inventions made in the United States, the Director of the USPTO must issue a license before applicants can apply for a patent in a foreign country. The filing of a U.S. patent application serves as a request for a foreign filing license. The application's filing receipt contains further information and guidance as to the status of applicant's license for foreign filing.

Applicants may wish to consult the USPTO booklet, "General Information Concerning Patents" (specifically, the section entitled "Treaties and Foreign Patents") for more information on timeframes and deadlines for filing foreign patent applications. The guide is available either by contacting the USPTO Contact Center at 800-786-9199, or it can be viewed on the USPTO website at http://www.uspto.gov/web/offices/pac/doc/general/index.html.

For information on preventing theft of your intellectual property (patents, trademarks and copyrights), you may wish to consult the U.S. Government website, http://www.stopfakes.gov. Part of a Department of Commerce initiative, this website includes self-help "toolkits" giving innovators guidance on how to protect intellectual property in specific countries such as China, Korea and Mexico. For questions regarding patent enforcement issues, applicants may call the U.S. Government hotline at 1-866-999-HALT (1-866-999-4158).

LICENSE FOR FOREIGN FILING UNDER

Title 35, United States Code, Section 184

Title 37, Code of Federal Regulations, 5.11 & 5.15

GRANTED

The applicant has been granted a license under 35 U.S.C. 184, if the phrase "IF REQUIRED, FOREIGN FILING LICENSE GRANTED" followed by a date appears on this form. Such licenses are issued in all applications where

the conditions for issuance of a license have been met, regardless of whether or not a license may be required as set forth in 37 CFR 5.15. The scope and limitations of this license are set forth in 37 CFR 5.15(a) unless an earlier license has been issued under 37 CFR 5.15(b). The license is subject to revocation upon written notification. The date indicated is the effective date of the license, unless an earlier license of similar scope has been granted under 37 CFR 5.13 or 5.14.

This license is to be retained by the licensee and may be used at any time on or after the effective date thereof unless it is revoked. This license is automatically transferred to any related applications(s) filed under 37 CFR 1.53(d). This license is not retroactive.

The grant of a license does not in any way lessen the responsibility of a licensee for the security of the subject matter as imposed by any Government contract or the provisions of existing laws relating to espionage and the national security or the export of technical data. Licensees should apprise themselves of current regulations especially with respect to certain countries, of other agencies, particularly the Office of Defense Trade Controls, Department of State (with respect to Arms, Munitions and Implements of War (22 CFR 121-128)); the Bureau of Industry and Security, Department of Commerce (15 CFR parts 730-774); the Office of Foreign AssetsControl, Department of Treasury (31 CFR Parts 500+) and the Department of Energy.

NOT GRANTED

No license under 35 U.S.C. 184 has been granted at this time, if the phrase "IF REQUIRED, FOREIGN FILING LICENSE GRANTED" DOES NOT appear on this form. Applicant may still petition for a license under 37 CFR 5.12, if a license is desired before the expiration of 6 months from the filing date of the application. If 6 months has lapsed from the filing date of this application and the licensee has not received any indication of a secrecy order under 35 U.S.C. 181, the licensee may foreign file the application pursuant to 37 CFR 5.15(b).

UNITED STATES PATENT AND TRADEMARK OFFICE

Commissioner for Patents
United States Patent and Trademark Office
P.O. Box 1450
Alexandria, VA 22313-1450
www.uspto.gov

Client 21058
c/o DARBY & DARBY P.C.
P.O. BOX 770
CHURCH STREET STATION
NEW YORK NY 10008-0770

MAILED

AUG 27 2009

OFFICE OF PETITIONS

In re Application of	:	
Titash Rakshit et al.	:	
Application No. 12/119,234	:	DECISION ON PETITION
Filed: May 12, 2008	:	TO WITHDRAW
Attorney Docket No. 21058/0209352-US0	:	FROM RECORD
	:	

This is a decision on the Request to Withdraw as attorney or agent of record under 37 C.F.R. § 1.36(b), filed July 10, 2009.

The request is **APPROVED**.

A grantable request to withdraw as attorney/agent of record must be signed by every attorney/agent seeking to withdraw or contain a clear indication that one attorney is signing on behalf of another/others. A request to withdraw will not be approved unless at least 30 (thirty) days would remain between the date of approval and the later of the expiration date of a time to file a response or the expiration date of the maximum time period which can be extended under 37 C.F.R. § 1.136(a).

The request was signed by Marie Collazo on behalf of all attorneys/agents associated with customer number 75172. All attorneys/agents associated with customer number 75172 have been withdrawn.

Applicant is reminded that there is no attorney of record at this time.

The request to change the correspondence of record is not acceptable as the requested correspondence address is not that of (1) the inventor; or (2) an intervening assignee of the entire interest under 37 C.F.R. 3.71. Accordingly, all correspondence will be mailed to the first signing inventor at the first copied address below, since no assignee has properly intervened in this application. A courtesy copy of this decision will also be mailed to the address noted on the request. If this person(s) desire to receive future correspondence regarding this application then the proper power of attorney documents and/or a Statement under 37 CFR 3.73(b) must be submitted.

Telephone inquiries concerning this decision should be directed to Kimberly Inabinet at 571-272-4618.

Kimberly Inabinet
Petitions Examiner
Office of Petitions

cc: Titash Rakshit
319 NW Wildwood Street
Hillsboro, OR 97124

cc: Intel Corporation
2200 Mission College Boulevard
Santa Clara, CA 95054

UNITED STATES PATENT AND TRADEMARK OFFICE

UNITED STATES DEPARTMENT OF COMMERCE
United States Patent and Trademark Office
Address: COMMISSIONER FOR PATENTS
P.O. Box 1450
Alexandria, Virginia 22313-1450
www.uspto.gov

APPLICATION NUMBER	FILING OR 371(C) DATE	FIRST NAMED APPLICANT	ATTY. DOCKET NO./TITLE
12/119,234	05/12/2008	Titash Rakshit	21058/0209352-US0

CONFIRMATION NO. 2635

POWER OF ATTORNEY NOTICE

OC000000037529623

75172
Client 21058
c/o DARBY & DARBY P.C.
P.O. BOX 770
CHURCH STREET STATION
NEW YORK, NY 10008-0770

Date Mailed: 08/26/2009

NOTICE REGARDING CHANGE OF POWER OF ATTORNEY

This is in response to the Power of Attorney filed 07/10/2009.

- The withdrawal as attorney in this application has been accepted. Future correspondence will be mailed to the new address of record. 37 CFR 1.33.

/kainabinet/

Office of Data Management, Application Assistance Unit (571) 272-4000, or (571) 272-4200, or 1-888-786-0101

UNITED STATES PATENT AND TRADEMARK OFFICE

UNITED STATES DEPARTMENT OF COMMERCE
United States Patent and Trademark Office
Address: COMMISSIONER FOR PATENTS
P.O. Box 1450
Alexandria, Virginia 22313-1450
www.uspto.gov

TEXAS INSTRUMENTS INCORPORATED
P O BOX 655474, M/S 3999
DALLAS, TX 75265

Mail Date: 04/20/2010

Applicant	: David Alexander Grant	: DECISION ON REQUEST FOR
Patent Number	: 7595660	: RECALCULATION of PATENT
Issue Date	: 09/29/2009	: TERM ADJUSTMENT IN VIEW
Appliction No	: 12/119,270	: OF WYETH AND NOTICE OF INTENT TO
Filed	: 05/12/2008	: ISSUE CERTIFICATE OF CORRECTION
		:

The Request for Recalculation is **GRANTED** to the extent indicated.

The patent term adjustment has been determined to be **0** days. The USPTO will *sua sponte* issue a certificate of correction reflecting the amount of PTA days determined by the recalculation.

Prior to the issuance of the certificate of correction, the USPTO will afford patentee an opportunity to be heard and request reconsideration. Accordingly, patentee has **one month or thirty (30) days**, whichever is longer, to file a request for reconsideration of this patent term adjustment calculation. See 35 U.S.C. 154(b)(3)(B)(ii) and 37 CFR 1.322(a)(4). No extensions of time will be granted under 37 CFR 1.136.

Patentee should use document code PET.OP if electronically filing a request for reconsideration of this patent term adjustment calculation. The patentee must also include the information required by 37 CFR 1.705(b)(2) and the fee required by 37 CFR 1.18(e). If patentee does not file a timely request for reconsideration of this patent term adjustment calculation including the information required by 37 CFR 1.705(b)(2) and the fee required by 37 CFR 1.18(e), the USPTO will issue a certificate of correction reflecting the PTA determination noted above.

Patentee should be aware that in order to preserve the right to review in the United States District Court for the District of Columbia of the USPTO patent term adjustment determination, patentee must ensure that he or she also take the steps required under 35 U.S.C. 154(b)(4)(A) in a timely manner. Nothing in the request for recalculation should be construed as providing an alternative time frame for commencing a civil action under 35 U.S.C. 154(b)(4)(A).

Any questions concerning this decision should be directed to the Office of Patent Legal Administration at 571-272-7702.

UNITED STATES PATENT AND TRADEMARK OFFICE

UNITED STATES DEPARTMENT OF COMMERCE
United States Patent and Trademark Office
Address: COMMISSIONER FOR PATENTS
P.O. Box 1450
Alexandria, Virginia 22313-1450
www.uspto.gov

TEXAS INSTRUMENTS INCORPORATED
P O BOX 655474, M/S 3999
DALLAS, TX 75265

Mail Date: 04/20/2010

Applicant	: MARK A. GERBER	: DECISION ON REQUEST FOR
Patent Number	: 7573139	: RECALCULATION of PATENT
Issue Date	: 08/11/2009	: TERM ADJUSTMENT IN VIEW
Appliction No	: 12/119,276	: OF WYETH AND NOTICE OF INTENT TO
Filed	: 05/12/2008	: ISSUE CERTIFICATE OF CORRECTION
		:

The Request for Recalculation is **GRANTED** to the extent indicated.

The patent term adjustment has been determined to be **0** days. The USPTO will *sua sponte* issue a certificate of correction reflecting the amount of PTA days determined by the recalculation.

Prior to the issuance of the certificate of correction, the USPTO will afford patentee an opportunity to be heard and request reconsideration. Accordingly, patentee has **one month or thirty (30) days**, whichever is longer, to file a request for reconsideration of this patent term adjustment calculation. See 35 U.S.C. 154(b)(3)(B)(ii) and 37 CFR 1.322(a)(4). No extensions of time will be granted under 37 CFR 1.136.

Patentee should use document code PET.OP if electronically filing a request for reconsideration of this patent term adjustment calculation. The patentee must also include the information required by 37 CFR 1.705(b)(2) and the fee required by 37 CFR 1.18(e). If patentee does not file a timely request for reconsideration of this patent term adjustment calculation including the information required by 37 CFR 1.705(b)(2) and the fee required by 37 CFR 1.18(e), the USPTO will issue a certificate of correction reflecting the PTA determination noted above.

Patentee should be aware that in order to preserve the right to review in the United States District Court for the District of Columbia of the USPTO patent term adjustment determination, patentee must ensure that he or she also take the steps required under 35 U.S.C. 154(b)(4)(A) in a timely manner. Nothing in the request for recalculation should be construed as providing an alternative time frame for commencing a civil action under 35 U.S.C. 154(b)(4)(A).

Any questions concerning this decision should be directed to the Office of Patent Legal Administration at 571-272-7702.

UNITED STATES PATENT AND TRADEMARK OFFICE

Commissioner for Patents
United States Patent and Trademark Office
P.O. Box 1450
Alexandria, VA 22313-1450
www.uspto.gov

Baker & McKenzie, LLP
Patent Department
2001 Ross Avenue
Suite 2300
Dallas, TX 75201

MAILED

AUG 10 2009

OFFICE OF PETITIONS

In re Application of	:	
Michael C. Pousti et al.	:	
Application No. 12/119,314	:	DECISION ON PETITION
Filed: May 12, 2008	:	TO WITHDRAW
Attorney Docket No. 67175511.001401	:	FROM RECORD
	:	

This is a decision on the Request to Withdraw as attorney or agent of record under 37 C.F.R. § 1.36(b), filed June 29, 2009.

The request is **moot because a revocation of power of attorney has been filed**.

A review of the file record indicates that the power of attorney to Baker & McKenzie, LLP, has been revoked by the assignee of the patent application on July 9, 2009. Accordingly, the request to withdraw under 37 C.F.R. § 1.36(b) is moot.

All future communications from the Office will continue to be directed to the below listed until otherwise notified by applicant.

Telephone inquires concerning this decision should be directed to Kimberly Inabinet at 571-272-4618.

Kimberly Inabinet
Petitions Examiner
Office of Petitions

cc: Procopio, Cory, Hargreaves & Savitch, LLP
530 B Street
Suite 2100
San Diego, CA 92101

UNITED STATES PATENT AND TRADEMARK OFFICE

Commissioner for Patents
United States Patent and Trademark Office
P.O. Box 1450
Alexandria, VA 22313-1450
www.uspto.gov

MILLER, MATTHIAS & HULL
ONE NORTH FRANKLIN STREET
SUITE 2350
CHICAGO IL 60606

COPY MAILED

OCT 16 2008

OFFICE OF PETITIONS

In re Application of :
Kenneth Edmund Arnett et al :
Application No. 12/119,343 : ON PETITION
Filed: May 12, 2008 :
Attorney Docket No. 50002/53465A :

This is a decision on the petition under 37 CFR 1.182, filed June 30, 2008, to change the order of the names of the inventors.

The petition is **Granted.**

A copy of the corrected Filing Receipt with the desired order of the names of the inventors accompanies this decision on petition.

Telephone inquiries regarding the above matter should be directed to the undersigned at (571)272-3208.

This matter is being referred to Technology Center AU 2629 for examination in due course.

Karen Creasy
Petitions Examiner
Office of Petitions

ATTACHMENT: CORRECTED FILING RECEIPT

UNITED STATES PATENT AND TRADEMARK OFFICE

UNITED STATES DEPARTMENT OF COMMERCE
United States Patent and Trademark Office
Address: COMMISSIONER FOR PATENTS
P.O. Box 1450
Alexandria, Virginia 22313-1450
www.uspto.gov

APPLICATION NUMBER	FILING or 371(c) DATE	GRP ART UNIT	FIL FEE REC'D	ATTY.DOCKET.NO	TOT CLAIMS	IND CLAIMS
12/119,343	05/12/2008	2874	8670	50002/53465A	101	17

CONFIRMATION NO. 2845

UPDATED FILING RECEIPT

57726
MILLER, MATTHIAS & HULL
ONE NORTH FRANKLIN STREET
SUITE 2350
CHICAGO, IL 60606

OC000000031026237

Date Mailed: 07/17/2008

Receipt is acknowledged of this non-provisional patent application. The application will be taken up for examination in due course. Applicant will be notified as to the results of the examination. Any correspondence concerning the application must include the following identification information: the U.S. APPLICATION NUMBER, FILING DATE, NAME OF APPLICANT, and TITLE OF INVENTION. Fees transmitted by check or draft are subject to collection. Please verify the accuracy of the data presented on this receipt. **If an error is noted on this Filing Receipt, please submit a written request for a Filing Receipt Correction. Please provide a copy of this Filing Receipt with the changes noted thereon. If you received a "Notice to File Missing Parts" for this application, please submit any corrections to this Filing Receipt with your reply to the Notice. When the USPTO processes the reply to the Notice, the USPTO will generate another Filing Receipt incorporating the requested corrections**

Applicant(s)

Kenneth Edmund Arnett, Boulder, CO;
Robert Bruce Charters, Palmerston, AUSTRALIA;
Chan Hong Wang, Acton, AUSTRALIA;
Graham Roy Atkins, Kaleen, AUSTRALIA;
Ian Andrew Maxwell, Five Dock, AUSTRALIA;
Duncan Ian Ross, Acton, AUSTRALIA;

Assignment For Published Patent Application

RPO Pty Limited, Acton, AUSTRALIA

Power of Attorney: The patent practitioners associated with Customer Number 57726

Domestic Priority data as claimed by applicant

This appln claims benefit of 60/917,567 05/11/2007
and claims benefit of 60/971,696 09/12/2007

Foreign Applications

If Required, Foreign Filing License Granted: 06/05/2008

The country code and number of your priority application, to be used for filing abroad under the Paris Convention, is **US 12/119,343**

Projected Publication Date: 11/13/2008

Non-Publication Request: No

Early Publication Request: No

Title

Transmissive Body

Preliminary Class

385

PROTECTING YOUR INVENTION OUTSIDE THE UNITED STATES

Since the rights granted by a U.S. patent extend only throughout the territory of the United States and have no effect in a foreign country, an inventor who wishes patent protection in another country must apply for a patent in a specific country or in regional patent offices. Applicants may wish to consider the filing of an international application under the Patent Cooperation Treaty (PCT). An international (PCT) application generally has the same effect as a regular national patent application in each PCT-member country. The PCT process **simplifies** the filing of patent applications on the same invention in member countries, but **does not result** in a grant of "an international patent" and does not eliminate the need of applicants to file additional documents and fees in countries where patent protection is desired.

Almost every country has its own patent law, and a person desiring a patent in a particular country must make an application for patent in that country in accordance with its particular laws. Since the laws of many countries differ in various respects from the patent law of the United States, applicants are advised to seek guidance from specific foreign countries to ensure that patent rights are not lost prematurely.

Applicants also are advised that in the case of inventions made in the United States, the Director of the USPTO must issue a license before applicants can apply for a patent in a foreign country. The filing of a U.S. patent application serves as a request for a foreign filing license. The application's filing receipt contains further information and guidance as to the status of applicant's license for foreign filing.

Applicants may wish to consult the USPTO booklet, "General Information Concerning Patents" (specifically, the section entitled "Treaties and Foreign Patents") for more information on timeframes and deadlines for filing foreign patent applications. The guide is available either by contacting the USPTO Contact Center at 800-786-9199, or it can be viewed on the USPTO website at http://www.uspto.gov/web/offices/pac/doc/general/index.html.

For information on preventing theft of your intellectual property (patents, trademarks and copyrights), you may wish to consult the U.S. Government website, http://www.stopfakes.gov. Part of a Department of Commerce initiative, this website includes self-help "toolkits" giving innovators guidance on how to protect intellectual property in specific countries such as China, Korea and Mexico. For questions regarding patent enforcement issues, applicants may call the U.S. Government hotline at 1-866-999-HALT (1-866-999-4158).

LICENSE FOR FOREIGN FILING UNDER

Title 35, United States Code, Section 184

Title 37, Code of Federal Regulations, 5.11 & 5.15

GRANTED

The applicant has been granted a license under 35 U.S.C. 184, if the phrase "IF REQUIRED, FOREIGN FILING LICENSE GRANTED" followed by a date appears on this form. Such licenses are issued in all applications where the conditions for issuance of a license have been met, regardless of whether or not a license may be required as

set forth in 37 CFR 5.15. The scope and limitations of this license are set forth in 37 CFR 5.15(a) unless an earlier license has been issued under 37 CFR 5.15(b). The license is subject to revocation upon written notification. The date indicated is the effective date of the license, unless an earlier license of similar scope has been granted under 37 CFR 5.13 or 5.14.

This license is to be retained by the licensee and may be used at any time on or after the effective date thereof unless it is revoked. This license is automatically transferred to any related applications(s) filed under 37 CFR 1.53(d). This license is not retroactive.

The grant of a license does not in any way lessen the responsibility of a licensee for the security of the subject matter as imposed by any Government contract or the provisions of existing laws relating to espionage and the national security or the export of technical data. Licensees should apprise themselves of current regulations especially with respect to certain countries, of other agencies, particularly the Office of Defense Trade Controls, Department of State (with respect to Arms, Munitions and Implements of War (22 CFR 121-128)); the Bureau of Industry and Security, Department of Commerce (15 CFR parts 730-774); the Office of Foreign AssetsControl, Department of Treasury (31 CFR Parts 500+) and the Department of Energy.

NOT GRANTED

No license under 35 U.S.C. 184 has been granted at this time, if the phrase "IF REQUIRED, FOREIGN FILING LICENSE GRANTED" DOES NOT appear on this form. Applicant may still petition for a license under 37 CFR 5.12, if a license is desired before the expiration of 6 months from the filing date of the application. If 6 months has lapsed from the filing date of this application and the licensee has not received any indication of a secrecy order under 35 U.S.C. 181, the licensee may foreign file the application pursuant to 37 CFR 5.15(b).

UNITED STATES PATENT AND TRADEMARK OFFICE

Commissioner for Patents
United States Patent and Trademark Office
P.O. Box 1450
Alexandria, VA 22313-1450
www.uspto.gov

BOYLE FREDRICKSON S.C.
840 North Plankinton Avenue
MILWAUKEE WI 53203

COPY MAILED
JUL 21 2008

In re Application of :
Prater, et al. :
Application No. 12/119,382 : ON PETITION
Filed: May 12, 2008 :
Attorney Docket No. 528.324

This is a decision on the petition, filed May 22, 2008, under 37 CFR 1.182 to change the order of the inventors cited on this application in USPTO records.

The petition is **granted.**

The order of the inventors is now as follows:

1. Craig Prater
2. Chanmin Su

A corrected filing receipt is enclosed.

The application file is being directed to the Office of Patent Application Processing for review.

Telephone inquiries concerning this matter may be directed to the undersigned at (571) 272-3222.

Kenya A. McLaughlin
Petitions Attorney
Office of Petitions

Enclosure: Corrected Filing Receipt

UNITED STATES PATENT AND TRADEMARK OFFICE

UNITED STATES DEPARTMENT OF COMMERCE
United States Patent and Trademark Office
Address: COMMISSIONER FOR PATENTS
P.O. Box 1450
Alexandria, Virginia 22313-1450
www.uspto.gov

APPLICATION NUMBER	FILING or 371(c) DATE	GRP ART UNIT	FIL FEE REC'D	ATTY.DOCKET.NO	TOT CLAIMS	IND CLAIMS
12/119,382	05/12/2008	2856	1940	528.324	34	4

CONFIRMATION NO. 2916

CORRECTED FILING RECEIPT

23598
BOYLE FREDRICKSON S.C.
840 North Plankinton Avenue
MILWAUKEE, WI 53203

OC000000031023085

Date Mailed: 07/17/2008

Receipt is acknowledged of this non-provisional patent application. The application will be taken up for examination in due course. Applicant will be notified as to the results of the examination. Any correspondence concerning the application must include the following identification information: the U.S. APPLICATION NUMBER, FILING DATE, NAME OF APPLICANT, and TITLE OF INVENTION. Fees transmitted by check or draft are subject to collection. Please verify the accuracy of the data presented on this receipt. **If an error is noted on this Filing Receipt, please submit a written request for a Filing Receipt Correction. Please provide a copy of this Filing Receipt with the changes noted thereon. If you received a "Notice to File Missing Parts" for this application, please submit any corrections to this Filing Receipt with your reply to the Notice. When the USPTO processes the reply to the Notice, the USPTO will generate another Filing Receipt incorporating the requested corrections**

Applicant(s)

Craig Prater, Goleta, CA;
Chanmin Su, Ventura, CA;

Assignment For Published Patent Application

VEECO INSTRUMENTS INC., Plainview, NY

Power of Attorney: The patent practitioners associated with Customer Number 23598

Domestic Priority data as claimed by applicant

This appln claims benefit of 60/917,301 05/10/2007

Foreign Applications

If Required, Foreign Filing License Granted: 07/16/2008

The country code and number of your priority application, to be used for filing abroad under the Paris Convention, is **US 12/119,382**

Projected Publication Date: 11/13/2008

Non-Publication Request: No

Early Publication Request: No

Title

NON-DESTRUCTIVE WAFER-SCALE SUB-SURFACE ULTRASONIC MICROSCOPY EMPLOYING NEAR FIELD AFM DETECTION

Preliminary Class

073

PROTECTING YOUR INVENTION OUTSIDE THE UNITED STATES

Since the rights granted by a U.S. patent extend only throughout the territory of the United States and have no effect in a foreign country, an inventor who wishes patent protection in another country must apply for a patent in a specific country or in regional patent offices. Applicants may wish to consider the filing of an international application under the Patent Cooperation Treaty (PCT). An international (PCT) application generally has the same effect as a regular national patent application in each PCT-member country. The PCT process **simplifies** the filing of patent applications on the same invention in member countries, but **does not result** in a grant of "an international patent" and does not eliminate the need of applicants to file additional documents and fees in countries where patent protection is desired.

Almost every country has its own patent law, and a person desiring a patent in a particular country must make an application for patent in that country in accordance with its particular laws. Since the laws of many countries differ in various respects from the patent law of the United States, applicants are advised to seek guidance from specific foreign countries to ensure that patent rights are not lost prematurely.

Applicants also are advised that in the case of inventions made in the United States, the Director of the USPTO must issue a license before applicants can apply for a patent in a foreign country. The filing of a U.S. patent application serves as a request for a foreign filing license. The application's filing receipt contains further information and guidance as to the status of applicant's license for foreign filing.

Applicants may wish to consult the USPTO booklet, "General Information Concerning Patents" (specifically, the section entitled "Treaties and Foreign Patents") for more information on timeframes and deadlines for filing foreign patent applications. The guide is available either by contacting the USPTO Contact Center at 800-786-9199, or it can be viewed on the USPTO website at http://www.uspto.gov/web/offices/pac/doc/general/index.html.

For information on preventing theft of your intellectual property (patents, trademarks and copyrights), you may wish to consult the U.S. Government website, http://www.stopfakes.gov. Part of a Department of Commerce initiative, this website includes self-help "toolkits" giving innovators guidance on how to protect intellectual property in specific countries such as China, Korea and Mexico. For questions regarding patent enforcement issues, applicants may call the U.S. Government hotline at 1-866-999-HALT (1-866-999-4158).

LICENSE FOR FOREIGN FILING UNDER

Title 35, United States Code, Section 184

Title 37, Code of Federal Regulations, 5.11 & 5.15

GRANTED

The applicant has been granted a license under 35 U.S.C. 184, if the phrase "IF REQUIRED, FOREIGN FILING LICENSE GRANTED" followed by a date appears on this form. Such licenses are issued in all applications where

the conditions for issuance of a license have been met, regardless of whether or not a license may be required as set forth in 37 CFR 5.15. The scope and limitations of this license are set forth in 37 CFR 5.15(a) unless an earlier license has been issued under 37 CFR 5.15(b). The license is subject to revocation upon written notification. The date indicated is the effective date of the license, unless an earlier license of similar scope has been granted under 37 CFR 5.13 or 5.14.

This license is to be retained by the licensee and may be used at any time on or after the effective date thereof unless it is revoked. This license is automatically transferred to any related applications(s) filed under 37 CFR 1.53(d). This license is not retroactive.

The grant of a license does not in any way lessen the responsibility of a licensee for the security of the subject matter as imposed by any Government contract or the provisions of existing laws relating to espionage and the national security or the export of technical data. Licensees should apprise themselves of current regulations especially with respect to certain countries, of other agencies, particularly the Office of Defense Trade Controls, Department of State (with respect to Arms, Munitions and Implements of War (22 CFR 121-128)); the Bureau of Industry and Security, Department of Commerce (15 CFR parts 730-774); the Office of Foreign AssetsControl, Department of Treasury (31 CFR Parts 500+) and the Department of Energy.

NOT GRANTED

No license under 35 U.S.C. 184 has been granted at this time, if the phrase "IF REQUIRED, FOREIGN FILING LICENSE GRANTED" DOES NOT appear on this form. Applicant may still petition for a license under 37 CFR 5.12, if a license is desired before the expiration of 6 months from the filing date of the application. If 6 months has lapsed from the filing date of this application and the licensee has not received any indication of a secrecy order under 35 U.S.C. 181, the licensee may foreign file the application pursuant to 37 CFR 5.15(b).

UNITED STATES PATENT AND TRADEMARK OFFICE

UNITED STATES DEPARTMENT OF COMMERCE
United States Patent and Trademark Office
Address: COMMISSIONER FOR PATENTS
P.O. Box 1450
Alexandria, Virginia 22313-1450
www.uspto.gov

LAW OFFICES OF MAXIMILIAN R. PETERSON
P.O. BOX 93005
AUSTIN, TX 78709-3005

Mail Date: 05/17/2010

Applicant	: William W. Bereza	: DECISION ON REQUEST FOR
Patent Number	: 7656323	: RECALCULATION of PATENT
Issue Date	: 02/02/2010	: TERM ADJUSTMENT IN VIEW
Application No	: 12/119,406	: OF WYETH AND NOTICE OF INTENT TO
Filed	: 05/12/2008	: ISSUE CERTIFICATE OF CORRECTION
		:

The Request for Recalculation is **GRANTED** to the extent indicated.

The patent term adjustment has been determined to be **0** days. The USPTO will *sua sponte* issue a certificate of correction reflecting the amount of PTA days determined by the recalculation.

Prior to the issuance of the certificate of correction, the USPTO will afford patentee an opportunity to be heard and request reconsideration. Accordingly, patentee has **one month or thirty (30) days**, whichever is longer, to file a request for reconsideration of this patent term adjustment calculation. See 35 U.S.C. 154(b)(3)(B)(ii) and 37 CFR 1.322(a)(4). No extensions of time will be granted under 37 CFR 1.136.

Patentee should use document code PET.OP if electronically filing a request for reconsideration of this patent term adjustment calculation. The patentee must also include the information required by 37 CFR 1.705(b)(2) and the fee required by 37 CFR 1.18(e). If patentee does not file a timely request for reconsideration of this patent term adjustment calculation including the information required by 37 CFR 1.705(b)(2) and the fee required by 37 CFR 1.18(e), the USPTO will issue a certificate of correction reflecting the PTA determination noted above.

Patentee should be aware that in order to preserve the right to review in the United States District Court for the District of Columbia of the USPTO patent term adjustment determination, patentee must ensure that he or she also take the steps required under 35 U.S.C. 154(b)(4)(A) in a timely manner. Nothing in the request for recalculation should be construed as providing an alternative time frame for commencing a civil action under 35 U.S.C. 154(b)(4)(A).

Any questions concerning this decision should be directed to the Office of Patent Legal Administration at 571-272-7702.

UNITED STATES PATENT AND TRADEMARK OFFICE

UNITED STATES DEPARTMENT OF COMMERCE
United States Patent and Trademark Office
Address: COMMISSIONER FOR PATENTS
P.O. Box 1450
Alexandria, Virginia 22313-1450
www.uspto.gov

SEAGATE TECHNOLOGY LLC
INTELLECTUAL PROPERTY DEPARTMENT
920 DISC DRIVE, MS/SV02A7
SCOTTS VALLEY, CA 95066-4544

Mail Date: 04/21/2010

Applicant	: Jeffry A. LEBLANC	: DECISION ON REQUEST FOR
Patent Number	: 7626783	: RECALCULATION of PATENT
Issue Date	: 12/01/2009	: TERM ADJUSTMENT IN VIEW
Appliction No	: 12/119,410	: OF WYETH AND NOTICE OF INTENT TO
Filed	: 05/12/2008	: ISSUE CERTIFICATE OF CORRECTION
		:

The Request for Recalculation is **GRANTED** to the extent indicated.

The patent term adjustment has been determined to be **0** days. The USPTO will *sua sponte* issue a certificate of correction reflecting the amount of PTA days determined by the recalculation.

Prior to the issuance of the certificate of correction, the USPTO will afford patentee an opportunity to be heard and request reconsideration. Accordingly, patentee has **one month or thirty (30) days**, whichever is longer, to file a request for reconsideration of this patent term adjustment calculation. See 35 U.S.C. 154(b)(3)(B)(ii) and 37 CFR 1.322(a)(4). No extensions of time will be granted under 37 CFR 1.136.

Patentee should use document code PET.OP if electronically filing a request for reconsideration of this patent term adjustment calculation. The patentee must also include the information required by 37 CFR 1.705(b)(2) and the fee required by 37 CFR 1.18(e). If patentee does not file a timely request for reconsideration of this patent term adjustment calculation including the information required by 37 CFR 1.705(b)(2) and the fee required by 37 CFR 1.18(e), the USPTO will issue a certificate of correction reflecting the PTA determination noted above.

Patentee should be aware that in order to preserve the right to review in the United States District Court for the District of Columbia of the USPTO patent term adjustment determination, patentee must ensure that he or she also take the steps required under 35 U.S.C. 154(b)(4)(A) in a timely manner. Nothing in the request for recalculation should be construed as providing an alternative time frame for commencing a civil action under 35 U.S.C. 154(b)(4)(A).

Any questions concerning this decision should be directed to the Office of Patent Legal Administration at 571-272-7702.

UNITED STATES PATENT AND TRADEMARK OFFICE

Commissioner for Patents
United States Patent and Trademark Office
P.O. Box 1450
Alexandria, VA 22313-1450
www.uspto.gov

TOWNSEND AND TOWNSEND AND CREW, LLP
TWO EMBARCADERO CENTER
EIGHTH FLOOR
SAN FRANCISCO, CA 94111-3834

MAILED

APR 09 2010

OFFICE OF PETITIONS

In re Application of :
You Sung Kim et al :
Application No. 12/119,412 : ON PETITION
Filed: May 12, 2008 :
Attorney Docket No. 00939C-167200US

This is a decision on the petition, filed April 7, 2010 under 37 CFR 1.313(c)(2) to withdraw the above-identified application from issue after payment of the issue fee.

The petition is **GRANTED**.

The above-identified application is withdrawn from issue for consideration of a submission under 37 CFR 1.114 (request for continued examination). See 37 CFR 1.313(c)(2).

Petitioner is advised that the issue fee paid on February 26, 2010 in the above-identified application cannot be refunded. If, however, the above-identified application is again allowed, petitioner may request that it be applied towards the issue fee required by the new Notice of Allowance.[1]

Telephone inquiries should be directed to Irvin Dingle at (571) 272-3210.

This matter is being referred to Technology Center AU 2827 for processing of the request for continued examination under 37 CFR 1.114 and for consideration of the concurrently filed Information Disclosure Statement.

/Irvin Dingle/
Irvin Dingle
Petitions Examiner
Office of Petitions

---

[1] The request to apply the issue fee to the new Notice may be satisfied by completing and returning the new Issue Fee Transmittal Form PTOL-85(b), which includes the following language thereon: Commissioner for Patents is requested to apply the Issue Fee and Publication Fee (if any) or re-apply any previously paid issue fee to the application identified above. Petitioner is advised that, whether a fee is indicated as being due or not, the Issue Fee Transmittal Form **must** be completed and timely submitted to avoid abandonment. Note the language in bold text on the first page of the Notice of Allowance and Fee(s) Due (PTOL-85).

UNITED STATES PATENT AND TRADEMARK OFFICE

Commissioner for Patents
United States Patent and Trademark Office
P.O. Box 1450
Alexandria, VA 22313-1450
www.uspto.gov

LEMOINE & ASSOCIATES L.L.C.
406 AUDUBON BLVD.
LAFAYETTE, LA 70503

MAILED

JUL 0 2 2009

OFFICE OF PETITIONS

In re Application of
Joseph Shea McDowell
Application No. 12/119,459
Filed: May 12, 2008
Attorney Docket No. Quantum 101 U

DECISION ON PETITION
TO WITHDRAW
FROM RECORD

This is a decision on the Request to Withdraw as attorney or agent of record under 37 C.F.R. § 1.36(b), filed November 19, 2008.

The request is **APPROVED**.

A grantable request to withdraw as attorney/agent of record must be signed by every attorney/agent seeking to withdraw or contain a clear indication that one attorney is signing on behalf of another/others. The Office will require the practitioner(s) to certify that he, she or they have: (1) given reasonable notice to the client, prior to the expiration of the reply period, which the practitioner(s) intends to withdraw from employment; (2) delivered to the client or a duly authorized representative of the client all papers and property (including funds) to which the client is entitled; and (3) notified the client of any replies that may be due and the time frame within which the client must respond, pursuant to 37 CFR 10.40 (c).

The request was signed by Joseph L. Lemoine Jr. on behalf of all practitioners of record who are associated with Customer Number 63082.

All attorneys/agents associated with the Customer Number 63082 have been withdrawn. Applicant is reminded that there is no attorney of record at this time.

All future correspondence will be directed to the first named inventor, Joseph Shea McDowell, at the address indicated below.

There are no outstanding Office actions that require a reply from the applicant.

Telephone inquires concerning this decision should be directed to Alicia Kelley at (571) 272-6059. All other inquires concerning either the pre-examination process or the status of the application should be directed to the Technology Center.

/Liana Walsh/
Liana Walsh
Petitions Examiner
Office of Petitions

cc: JOSEPH SHEA MCDOWELL
5504 LEGACY OAKS PKWY. #1435
SAN ANTONIO, TX 78154

UNITED STATES PATENT AND TRADEMARK OFFICE

UNITED STATES DEPARTMENT OF COMMERCE
United States Patent and Trademark Office
Address: COMMISSIONER FOR PATENTS
P.O. Box 1450
Alexandria, Virginia 22313-1450
www.uspto.gov

APPLICATION NUMBER	FILING OR 371(C) DATE	FIRST NAMED APPLICANT	ATTY. DOCKET NO./TITLE
12/119,459	05/12/2008	Joseph Shea McDowell	

CONFIRMATION NO. 3078

POWER OF ATTORNEY NOTICE

63082
LEMOINE & ASSOCIATES L.L.C.
406 AUDUBON BLVD.
LAFAYETTE, LA 70503

OC000000036771827

Date Mailed: 07/02/2009

NOTICE REGARDING CHANGE OF POWER OF ATTORNEY

This is in response to the Power of Attorney filed 11/19/2008.

- The withdrawal as attorney in this application has been accepted. Future correspondence will be mailed to the new address of record. 37 CFR 1.33.

/atkelley/

Office of Data Management, Application Assistance Unit (571) 272-4000, or (571) 272-4200, or 1-888-786-0101

UNITED STATES PATENT AND TRADEMARK OFFICE

Commissioner for Patents
United States Patent and Trademark Office
P.O. Box 1450
Alexandria, VA 22313-1450
www.uspto.gov

LOYD W BONNEVILLE
1213 AMSTERDAM AVE
MADISON, WI 53716

COPY MAILED

MAR 0 2 2009

OFFICE OF PETITIONS

In re Application of
HINDS, Robert S. et al.
Application No. 12/119,518
Filed: May 13, 2008
Attorney Docket No. **54599024**

DECISION ON PETITION
TO WITHDRAW
FROM RECORD

This is a decision on the Request to Withdraw as attorney or agent of record under 37 C.F.R. § 1.36(b), filed January 27, 2009.

The request is **moot** because a revocation of power of attorney has been previously filed.

A review of the file record indicates that the power of attorney to LOYD W BONNEVILLE has been revoked by the assignee of the patent application on January 21, 2009. Accordingly, the request to withdraw under 37 C.F.R. § 1.36(b) is moot.

All future communications from the Office will continue to be directed to the below-listed address until otherwise notified by applicant.

Telephone inquires concerning this decision should be directed to Tredelle Jackson at 571-272-2783.

Tredelle D. Jackson
Paralegal Specialist
Office of Petitions

cc: **INTELLECTUAL PROPERTY DEPT.**
DEWITT ROSS & STEVENS SC
2 EAST MIFFLIN STREET
SUITE 600
MADISON WI 53703-2865

UNITED STATES PATENT AND TRADEMARK OFFICE

Commissioner for Patents
United States Patent and Trademark Office
P.O. Box 1450
Alexandria, VA 22313-1450
www.uspto.gov

Loyd W. Bonneville
1213 Amsterdam Avenue
Madison, WI 53716

COPY MAILED

FEB 27 2009

OFFICE OF PETITIONS

In re Application of	
Robert Sylvester Hinds et al.	
Application No. 12/119,523	DECISION ON PETITION
Filed: May 13, 2008	TO WITHDRAW
Attorney Docket No. 54599026	FROM RECORD

This is a decision on the Request to Withdraw as attorney or agent under 37 C.F.R. § 1.36(b) or 37 C.F.R. § 10.40 filed January 27, 2009.

The request is **moot because a revocation of power of attorney has been previously filed**.

A review of the file record indicates that the power of attorney to Loyd W. Bonneville and all attorneys/agents associated with customer number 25005 have been revoked by the assignee of the patent application on January 21, 2009. Accordingly, the request to withdraw under 37 C.F.R. § 1.36(b) is moot.

All future communications from the Office will continue to be directed to the below-listed address until otherwise notified by applicant.

Telephone inquires concerning this decision should be directed to Kimberly Inabinet at 571-272-4618.

Kimberly Inabinet
Petitions Examiner
Office of Petitions

cc: Intellectual Property Dept.
Dewitt Ross & Stevens SC
2 East Mifflin Street
Suite 600
Madison, WI 53703-2865

UNITED STATES PATENT AND TRADEMARK OFFICE

UNITED STATES DEPARTMENT OF COMMERCE
United States Patent and Trademark Office
Address: COMMISSIONER FOR PATENTS
P.O. Box 1450
Alexandria, Virginia 22313-1450
www.uspto.gov

APPLICATION NO.	FILING DATE	FIRST NAMED INVENTOR	ATTORNEY DOCKET NO.	CONFIRMATION NO.
12/119,529	05/13/2008	Shiroh SUZUKI	Q108198	3218

65565 7590 07/01/2010
SUGHRUE-265550
2100 PENNSYLVANIA AVE. NW
WASHINGTON, DC 20037-3213

EXAMINER
BEATTY, ROBERT B

ART UNIT	PAPER NUMBER
2852	

NOTIFICATION DATE	DELIVERY MODE
07/01/2010	ELECTRONIC

Please find below and/or attached an Office communication concerning this application or proceeding.

The time period for reply, if any, is set in the attached communication.

Notice of the Office communication was sent electronically on above-indicated "Notification Date" to the following e-mail address(es):

SUGHRUE265550@SUGHRUE.COM
USPTO@SUGHRUE.COM
PPROCESSING@SUGHRUE.COM

UNITED STATES PATENT AND TRADEMARK OFFICE

Commissioner for Patents
United States Patent and Trademark Office
P.O. Box 1450
Alexandria, VA 22313-1450
www.uspto.gov

SUGHRUE-265550
2100 PENNSYLVANIA AVE. NW
WASHINGTON DC 20037-3213

In re Application of	**: DECISION ON REQUEST TO**
SUZUKI et al.	**: PARTICIPATE IN THE PATENT**
Application No.: 12/119,529	**: PROSECUTION HIGHWAY**
Filed: 13 May 2008	**: PROGRAM AND PETITION**
Attorney Docket No.: Q108198	**: TO MAKE SPECIAL UNDER**
For: IMAGE FORMING APPARATUS	**: 37 CFR 1.102(d)**

This is a decision on the request to participate in the Patent Prosecution Highway (PPH) program and the petition under 37 CFR 1.102(d), filed 18 June 2010, to make the above-identified application special.

The request and petition are **GRANTED**.

Discussion

A grantable request to participate in the PPH pilot program and petition to make special require:

1. The U.S. application is

    a. a Paris Convention application which either
        i. validly claims priority under 35 U.S.C. 119(a) and 37 CFR 1.55 to one or more applications filed in the JPO, or
        ii. validly claims priority to a PCT application that contains no priority claims, or

    b. a national stage application under the PCT (an application which entered the national stage in the U.S. from a PCT international application after compliance with 35 U.S.C. 371), which PCT application
        i. validly claims priority to an application filed in the JPO, or
        ii. validly claims priority to a PCT application that contains no priority claims, or
        iii. contains no priority claim, or

    c. a so-called bypass application filed under 35 U.S.C. 111(a) which validly claims benefit under 35 U.S.C. 120 to a PCT application, which PCT application
        i. validly claims priority to an application filed in the JPO, or

ii. validly claims priority to a PCT application that contains no priority claims, or
iii. contains no priority claim;

2. Applicant must submit a copy of:
   a. The allowable/patentable claim(s) from the JPO application(s);
   b. An English translation of the allowable/patentable claim(s) and
   c. A statement that the English translation is accurate;
3. Applicant must:
   a. Ensure all the claims in the U.S. application must sufficiently correspond or be amended to sufficiently correspond to the allowable/patentable claim(s) in the JPO application(s) and
   b. Submit a claims correspondence table in English;
4. Examination of the U.S. application has <u>not</u> begun;
5. Applicant must submit:
   a. Documentation of prior office action:
      i. a copy of the office action(s) just prior to the "Decision to Grant a Patent" from each of the JPO application(s) containing the allowable/patentable claim(s) or
      ii. if the allowable/patentable claims(s) are from a "Notification of Reasons for Refusal" then the Notification of Reasons for Refusal or
      iii. if the JPO application is a first action allowance then no office action from the JPO is necessary should be indicated on the request/petition form;
   b. An English language translation of the JPO Office action from (5)(a)(i)-(ii) above
   c. A statement that the English translation is accurate;
6. Applicant must submit:
   a. An IDS listing the documents cited by the JPO examiner in the JPO office action (unless already submitted in this application)
   b. Copies of the documents except U.S. patents or U.S. patent application publications (unless already submitted in this application);
7. The required petition fee under 37 CFR 1.17(h).

The request to participate in the PPH pilot program and petition comply with the above requirements. Accordingly, the above-identified application has been accorded "special" status.

Inquiries concerning this decision should be directed to Lee W. Young at 571-272-4549.

All other inquiries concerning the examination or status of the application is accessible in the PAIR system at http://www.uspto.gov/ebc.index.html.

This application will be forwarded to the examiner for action on the merits commensurate with this decision.

Lee W. Young
TQAS
Technology Center 2800

PTO/SB/130 (03-08)
Approved for use through 05/31/2008. OMB 0651- 0031
U.S. Patent and Trademark Office; U.S. DEPARTMENT OF COMMERCE
Under the Paperwork Reduction Act of 1995, no persons are required to respond to a collection of information unless it contains a valid OMB control number

PETITION TO MAKE SPECIAL BASED ON AGE FOR ADVANCEMENT OF EXAMINATION UNDER 37 CFR 1.102(c)(1)

Application Information

Application Number	12/119,532	Confirmation Number	3228	Filing Date	2008-05-13
Attorney Docket Number (optional)	117.3519	Art Unit		Examiner	
First Named Inventor	Robert Lee Josephs				
Title of Invention	BEVERAGE HEATING AND COOLING DEVICE AND ASSOCIATED METHODS				

Attention: Office of Petitions

An application may be made special for advancement of examination upon filing of a petition showing that the applicant is 65 years of age, or more. No fee is required with such a petition. See 37 CFR 1.102(c)(1) and MPEP 708.02 (IV).

APPLICANT HEREBY PETITIONS TO MAKE SPECIAL FOR ADVANCEMENT OF EXAMINATION IN THIS APPLICATION UNDER 37 CFR 1.102(c)(1) and MPEP 708.02 (IV) ON THE BASIS OF THE APPLICANT'S AGE.

A grantable petition requires one of the following items:
(1) Statement by one named inventor in the application that he/she is 65 years of age, or more; or
(2) Certification by a registered attorney/agent having evidence such as a birth certificate, passport, driver's license, etc. showing one named inventor in the application is 65 years of age, or more.

Name of Inventor who is 65 years of age, or older

Given Name	Middle Name	Family Name	Suffix
ROBERT	LEE	JOSEPHS	

A signature of the applicant or representative is required in accordance with 37 CFR 1.33 and 10.18.
Please see 37 CFR 1.4(d) for the format of the signature.

Select (1) or (2) :

○ (1) I am an inventor in this application and I am 65 years of age, or more.

◉ (2) I am an attorney or agent registered to practice before the Patent and Trademark Office, and I certify that I am in possession of evidence, and will retain such in the application file record, showing that the inventor listed above is 65 years of age, or more.

Signature	/Mark R. Malek/	Date (YYYY-MM-DD)	2008-05-30
Name	Mark R. Malek	Registration Number	46894

PTO/SB/130 (03-08)
Approved for use through 05/31/2008. OMB 0651- 0031
U.S. Patent and Trademark Office; U.S. DEPARTMENT OF COMMERCE
Under the Paperwork Reduction Act of 1995, no persons are required to respond to a collection of information unless it contains a valid OMB control number

Privacy Act Statement

The Privacy Act of 1974 (P.L. 93-579) requires that you be given certain information in connection with your submission of the attached form related to a patent application or patent. Accordingly, pursuant to the requirements of the Act, please be advised that: (1) the general authority for the collection of this information is 35 U.S.C. 2(b)(2); (2) furnishing of the information solicited is voluntary; and (3) the principal purpose for which the information is used by the U.S. Patent and Trademark Office is to process and/or examine your submission related to a patent application or patent. If you do not furnish the requested information, the U.S. Patent and Trademark Office may not be able to process and/or examine your submission, which may result in termination of proceedings or abandonment of the application or expiration of the patent.

The information provided by you in this form will be subject to the following routine uses:

1. The information on this form will be treated confidentially to the extent allowed under the Freedom of Information Act (5 U.S.C. 552) and the Privacy Act (5 U.S.C. 552a). Records from this system of records may be disclosed to the Department of Justice to determine whether the Fr eedom of Information Act requires disclosure of these records.

2. A record from this system of records may be disclosed, as a routine use, in the course of presenting evidence to a court, magistrate, or administrative tribunal, including disclosures to opposing counsel in the course of settlement negotiations.

3. A record in this system of records may be disclosed, as a routine use, to a Member of Congress submitting a request involving an individual, to whom the record pertains, when the individual has requested assistance from the Member with respect to the subject matter of the record.

4. A record in this system of records may be disclosed, as a routine use, to a contractor of the Agency having need for the information in order to perform a contract. Recipients of information shall be required to comply with the requirements of the Privacy Act of 1974, as amended, pursuant to 5 U.S.C. 552a(m).

5. A record related to an International Application filed under the Patent Cooperation Treaty in this system of records may be disclosed, as a routine use, to the International Bureau of the World Intellectual Property Organization, pursuant to the Patent Cooperation Treaty.

6. A record in this system of records may be disclosed, as a routine use, to another federal agency for purposes of National Security review (35 U.S.C. 181) and for review pursuant to the Atomic Energy Act (42 U.S.C. 218(c)).

7. A record from this system of records may be disclosed, as a routine use, to the Administrator, General Services, or his/her designee, during an inspection of records conducted by GSA as part of that agency's responsibility to recommend improvements in records management practices and programs, under authority of 44 U.S.C. 2904 and 2906. Such disclosure shall be made in accordance with the GSA regulations governing inspection of records for this purpose, and any other relevant (i.e., GSA or Commerce) directive. Such disclosure shall not be used to make determinations about indivi duals.

8. A record from this system of records may be disclosed, as a routine use, to the public after either publication of the application pursuant to 35 U.S.C. 122(b) or issuance of a patent pursuant to 35 U.S.C. 151. Further, a record may be disclosed, subject to the limitations of 37 CFR 1.14, as a routine use, to the public if the record was filed in an application which became abandoned or in which the proceedings were terminated and which application is referenced by either a published application, an application open to public inspections or an issued patent.

9. A record from this system of records may be disclosed, as a routine use, to a Federal, State, or local law enforcement agency, if the USPTO becomes aware of a violation or potential violation of law or regulation.

UNITED STATES PATENT AND TRADEMARK OFFICE

Commissioner for Patents
United States Patent and Trademark Office
P.O. Box 1450
Alexandria, VA 22313-1450
www.uspto.gov

In re Application of
Robert Lee Josephs

Application No. 12119532

Filed: May 13,2008

Attorney Docket No. 117.3519

:DECISION ON PETITION TO MAKE SPECIAL
:UNDER 37 CFR 1.102(c)(1)

This is a decision on the electronic petition under 37 CFR 1.102 (c)(1) ,filed 30-MAY-2008 to make the above-identified application special based on applicant's age as set forth in MPEP § 708.02, Section IV.

The petition is **GRANTED**.

A grantable petition to make an application special under 37 CFR 1.102(c)(1), MPEP § 708.02, Section IV: Applicant's Age must include a statement by applicant or a registered practitioner having evidence that applicant is at least 65 years of age. No fee is required.

Accordingly, the above-identified application has been accorded “special” status and will be taken up for action by the examiner upon the completion of all pre-examination processing.

Telephone inquires concerning this electronic decision should be directed to the Electronic Business Center at 866-217-9197.

All other inquires concerning either the examination or status of the application should be directed to the Technology Center.

OIPE IAP87
MAR 0 6 2009
PATENT & TRADEMARK OFFICE

IFW

UNITED STATES PATENT AND TRADEMARK OFFICE

Commissioner for Patents
United States Patent and Trademark Office
P.O. Box 1450
Alexandria, VA 22313-1450
www.uspto.gov

In re Application of
Robert Lee Josephs

Application No. 12119532
Filed: May 13,2008

Attorney Docket No. 117.3519

:DECISION ON PETITION TO MAKE SPECIAL
:UNDER 37 CFR 1.102(c)(1)

This is a decision on the electronic petition under 37 CFR 1.102 (c)(1) ,filed 30-MAY-2008 to make the above-identified application special based on applicant's age as set forth in MPEP § 708.02, Section IV.

The petition is **GRANTED**.

A grantable petition to make an application special under 37 CFR 1.102(c)(1), MPEP § 708.02, Section IV: Applicant's Age must include a statement by applicant or a registered practitioner having evidence that applicant is at least 65 years of age. No fee is required.

Accordingly, the above-identified application has been accorded "special" status and will be taken up for action by the examiner upon the completion of all pre-examination processing.

Telephone inquires concerning this electronic decision should be directed to the Electronic Business Center at 866-217-9197.

All other inquires concerning either the examination or status of the application should be directed to the Technology Center.

DR. ROBERT L. JOSEPHS
370 LAKE VIEW LANE
PALM BAY, FL 32909

UNITED STATES PATENT AND TRADEMARK OFFICE

OIPE IAP10 MAR 06 2009 PATENT & TRADEMARK OFFICE

UNITED STATES DEPARTMENT OF COMMERCE
United States Patent and Trademark Office
Address: COMMISSIONER FOR PATENTS
P.O Box 1450
Alexandria, Virginia 22313-1450
www.uspto.gov

Zies, Widerman, Sutch & Malek, P.L.
202 N. Harbor City Blvd
Suite #200
Melbourne FL 32935

DATE : 02/25/2009

To: Applicant of Serial Number 12119532
Filed on 13-MAY-2008
(Art Unit 3782)

It is estimated that this application will receive an Office action in approximately 28 months. This is an estimate that is based on the current inventory level of applications filed in this art area and the current staffing levels in this Art Unit. The USPTO is dedicated to minimizing first action and total pendency, and we are targeting resources to help address backlogs in art areas with high new application filings. Thank you for your inquiry.

Customer Service Office in Technology Center: 3700

Phone Number:	571-272-3700
Central Fax Number:	571-273-8300

DR. ROBERT L. JOSEPHS
370 LAKE VIEW LANE
PALM BAY, FL 32909

OIPE IAP87
MAR 0 6 2009
PATENT & TRADEMARK OFFICE

Dr. Robert Josephs
370 Lake View Lane
Palm Bay FL 32909-7123
H-321 676-2334 C-321 243-2334
email bobjosephs@bellsouth.net

Commissioner for Patents
U. S. Patent and Trademark Office
P O Box 1450
Alexandria VA 22313-1450

March 1, 2008

Sirs,

Find enclosed a copy of your decision to GRANT SPECIAL handling of my application for a patent.
It is now a year since that consideration was granted.
Please advise me of the status of my application.

Yours Truly,

Robert L. Josephs

UNITED STATES PATENT AND TRADEMARK OFFICE

Commissioner for Patents
United States Patent and Trademark Office
P.O. Box 1450
Alexandria, VA 22313-1450
www.uspto.gov

In re Application of
Jack W. Wilson

Application No. 12119549

Filed: May 13,2008

Attorney Docket No. FTT-537R

:DECISION ON PETITION TO MAKE SPECIAL
:UNDER 37 CFR 1.102(c)(1)

This is a decision on the electronic petition under 37 CFR 1.102 (c)(1), filed 20-FEB-2009 to make the above-identified application special based on applicant's age as set forth in MPEP § 708.02, Section IV.

The petition is **GRANTED**.

A grantable petition to make an application special under 37 CFR 1.102(c)(1), MPEP § 708.02, Section IV: Applicant's Age must include a statement by applicant or a registered practitioner having evidence that applicant is at least 65 years of age. No fee is required.

Accordingly, the above-identified application has been accorded "special" status and will be taken up for action by the examiner upon the completion of all pre-examination processing.

Telephone inquiries concerning this electronic decision should be directed to the Electronic Business Center at 866-217-9197.

All other inquiries concerning either the examination or status of the application should be directed to the Technology Center.

UNITED STATES PATENT AND TRADEMARK OFFICE

Commissioner for Patents
United States Patent and Trademark Office
P.O. Box 1450
Alexandria, VA 22313-1450
www.uspto.gov

GREER, BURNS & CRAIN
300 S WACKER DR
25TH FLOOR
CHICAGO, IL 60606

MAILED

MAR 2 9 2010

OFFICE OF PETITIONS

In re Patent No. 7,674,067	:	
Issue Date: March 9, 2010	:	
Application No. 12/119,552	:	NOTICE
Filed: May 13, 2008	:	
Attorney Docket No. 4213.70153D1	:	

This is a notice regarding your request for acceptance of a fee deficiency submission under 37 CFR 1.28.

The Office no longer investigates or rejects original or reissue patent under 37 CFR 1.56. **1098 Off. Gaz. Pat. Office 502 (January 3, 1989)**. Therefore, nothing in this Notice is intended to imply that an investigation was done.

Your fee deficiency submission under 37 CFR 1.28 is hereby **ACCEPTED**.

This patent is no longer entitled to small entity status. Accordingly, all future fees paid in this patent must be paid at the large entity rate.

Inquiries related to this communication should be directed to the undersigned at (571) 272-6059.

A. Kelley

Alicia Kelley
Petitions Examiner
Office of Petitions

UNITED STATES PATENT AND TRADEMARK OFFICE

UNITED STATES DEPARTMENT OF COMMERCE
United States Patent and Trademark Office
Address: COMMISSIONER FOR PATENTS
P.O. Box 1450
Alexandria, Virginia 22313-1450
www.uspto.gov

APPLICATION NO.	FILING DATE	FIRST NAMED INVENTOR	ATTORNEY DOCKET NO.	CONFIRMATION NO.
12/119,554	05/13/2008	Shiri Kremer-Davidson	20140-00399-US	3270

30678 7590 08/13/2008
CONNOLLY BOVE LODGE & HUTZ LLP
1875 EYE STREET, N.W.
SUITE 1100
WASHINGTON, DC 20036

EXAMINER
DAM, TUAN QUANG

ART UNIT	PAPER NUMBER
2192	

MAIL DATE	DELIVERY MODE
08/13/2008	PAPER

Please find below and/or attached an Office communication concerning this application or proceeding.

The time period for reply, if any, is set in the attached communication.

UNITED STATES PATENT AND TRADEMARK OFFICE

Commissioner for Patents
United States Patent and Trademark Office
P.O. Box 1450
Alexandria, VA 22313-1450
www.uspto.gov

MR. MYRON KEITH WYCHE
IBM - YORKTOWN
C/O CONNOLLY, BOVE, LODGE, & HUTZ LLP
1875 EYE STREET, N.W.
SUITE 1100
WASHINGTON, DC 20036

In re Application of:
Shiri KREMER-DAVIDSON, et al.
Application No. 12/119,554
Filed: May 13, 2008
Docket: 20140-00399-US
For: PROTOCOL INDEPENDENT TELEPHONY CALL LIFECYCLE MANAGEMENT SCHEME

DECISION ON PETITION TO MAKE SPECIAL (ACCELERATED EXAMINATION) UNDER 37 C.F.R. § 1.102(d) and M.P.E.P. §708.02

This is a decision on the Petition To Make Special under 37 C.F.R. § 1.102(d) and M.P.E.P. §708.02(VIII): Accelerated Examination, filed on May 13, 2008.

The petition is **DISMISSED**.

I. M.P.E.P. § 708.02(VIII) sets forth the prerequisites for a grantable Petition for Accelerated Examination under 37 C.F.R. § 1.102(d) and states in relevant part:

A new application (one which has not received any examination by the examiner) may be granted special status provided that applicant (and this term includes applicant's attorney or agent) complies with each of the following items:

(a) Submits a petition to make special accompanied by the fee set forth in 37 CFR § 1.17(h);

(b) Presents all claims directed to a single invention, or if the Office determines that all the claims presented are not obviously directed to a single invention, will make an election without traverse as a prerequisite to the grant of special status;

(c) Submits a statement(s) that a pre-examination search was made, listing the field of search by class and subclass, publication, Chemical Abstracts, foreign patents, etc. A search made by a foreign patent office satisfies this requirement;

(d) Submits one copy each of the references deemed most closely related to the subject matter encompassed by the claims if said references are not already of record; and

(e) Submits a detailed discussion of the references, which discussion points out, with the particularity required by 37 CFR §§ 1.111 (b) and (c), how the claimed subject matter is patentable over the references.

MPEP 708.02(a)(I.)(I)(2) requires that for each reference cited, the accelerated examination support document **must** include an **identification of all the limitations** in the claims that are disclosed by the reference specifying **where the limitation is disclosed in the cited reference.**

The Petition is deficient with respect to M.P.E.P. § 708.02(VIII)(e) and MPEP 708.02(a)(I.)(I)(2) (as bolded supra) . As set forth, Petitioner must provide a "detailed discussion of the references, which discussion points out, with the particularly requirement by 37 CFR § 1.111(b) and (c), how the claimed subject matter is patentable over the references." 37 CFR § 1.111(b) requires that the discussion of prior art references presents "arguments pointing out the specific distinctions believed to render the claims . . . patentable over any applied references;" while 37 CFR § 1.111(c) states that "[a] general allegation that the claims define a patentable invention without specifically pointing out how the language of the claims patentably distinguishes them from the references does not comply with the requirements of this section.".

A. In the petition section labeled "9(B). Identification of Limitations Disclosed by References," Petitioner's discussion of the LEE, MARTIN, and HUANG prior art fails to sufficiently compare each of Petitioner's claim elements to each reference's disclosures. Discussion of the limitations disclosed by the prior art must be individually compared to the each claim limitation of the Petitioner's claimed invention. In addition, the Petitioner must point to the specific location in the prior art reference where said limitation is located. Petitioner's discussion of the prior art references is deficient in this respect.

With regard to the LEE prior art reference, Petitioner does not adequately compare the instant claim limitations with the prior art, instead relying on a summary of the LEE patent application. Additionally, Petitioner fails to point out the locations in which any limitations are disclosed. With regard to Petitioner's discussion of the MARTIN and HUANG prior art references, Petitioner again does not adequately compare the instant claim limitations with the prior art, instead relying on a summary of the patents. Nor does Petitioner adequately provide textual locations of claim limitations disclosed in the prior art. Each of these references does reference the prior art, but the preciseness is not sufficient. For instance in MARTIN, Petitioner references "col 7, ln 31-32; col 12, ln 11-36" as the location for "managing the lifecycle telephone call." A notation that a claim disclosure is located somewhere in twenty five lines of text is overly broad.

Petitioner is required to provide a detail discussion of the pertinent subject matter disclosed in each of the references, specifically identifying *each claim limitation* and *corresponding disclosure* within the reference, citing to *specific relevant portions of each reference* by way of figure, page, paragraph and line numbers, as appropriate.

B. In the petition section labeled "9(C). Detailed Explanation of Patentability," Petitioner fails to adequately discuss "specific distinctions" between the prior art and the claimed invention as set forth in the preceding paragraph. Instead, Petitioner relies on the general allegation that "[n]one of Lee et al., Martin et al., or Huang et al. disclose as claim 1 recites." This discussion is deficient in both scope and breadth as each claim limitation must be compared to the each piece of prior art, pointing out both the **similarities** and **differences** between the claimed invention and said prior art.

Petitioner's **cursory treatment** of the references does not detail, with the particularity called for in 37 CFR § 1.111(b), the relevancy of the prior art pedagogy in order to sufficiently set forth a case distinguishing the limitations claimed to be patentable in relation to the given reference. The petition must specifically show, for each independent claim, **specific language** that distinguishes it over each give reference in order to specify "how the claimed subject matter is patentable over the references."

II. M.P.E.P. § 708.02(a)(H) set forth the requirements for granting accelerated examination status under 37 C.F.R. § 1.102(c)(2) and states in relevant part:

A new application may be granted accelerated examination status under the following conditions:

(H) **At the time of filing, applicant must provide a statement that a preexamination search was conducted, including an identification of the field of search by United States class and subclass and the date of the search, where applicable, and for database searches, the search logic or chemical structure or sequence used as a query, the name of the file or files searched and the database service, and the date of the search.**

(1) **This preexamination search must involve U.S. patents and patent application publications, foreign patent documents, and non-patent literature, unless the applicant can justify with reasonable certainty that no references more pertinent than those already identified are likely to be found in the eliminated source and includes such a justification with this statement.**

(2) **This preexamination search must be directed to the claimed invention and encompass all of the features of the claims, giving the claims the broadest reasonable interpretation.**

(3) **The preexamination search must also encompass the disclosed features that may be claimed. An amendment to the claims (including any new claim) that is not encompassed by the preexamination search or an updated accelerated examination support document (see item I) will be treated as not fully responsive and will not be entered. See subsection IV below for more information.**

(4) A search report from a foreign patent office will not satisfy this preexamination search requirement unless the search report satisfies the requirements for a preexamination search.

(5) Any statement in support of a petition to make special must be based on a good faith belief that the preexamination search was conducted in compliance with these requirements. See 37 CFR 1.56 and 10.18.

The Petition is deficient with respect to M.P.E.P. § 708.02(a)(H) (as bolded supra).

A. Regarding the requirement of MPEP § 708.02(a)(H)(1), the "preexamination search must involve U.S. patents and **patent application publications**, foreign patent documents, and non-patent literature. . . ." It is unclear from Petitioner's documentation whether United States published patent applications (US-PGPUB) were searched along with the other databases included in Petitioner's preexamination search documentation. Without an express statement that a preexamination search of the entirety of the US-PGPUB database has been performed, this petition is deficient.

B. Regarding the requirement of MPEP § 708.02(a)(H)(2), the pre-exam search must be directed to the (instant) claimed invention. Based upon the subject matter of this Petition, a search in the following additional class and/or subclasses should be included in order to provide full coverage of where the most pertinent references are most likely to be found:

U.S. Field of Search;
379/88.13
379/88.22
379/112.01
455/418

The aforementioned additional classes and/or sub-classes are not meant as an exhaustive list, merely a representative listing of applicable search areas which have not been included in the Petitioner's pre-exam search. It is incumbent on the Petitioner to evaluate all applicable classes and/or sub-classes for pertinent prior art.

C. Regarding the requirement of MPEP § 708.02(a)(H)(3), the text search query reported by the Petitioner fails for its lack of depth and breadth to cover all of the concepts the claims recite. Initially, it is noted that Petitioner's search of DialogWEB, Set "S2" contains the spelling error "TELEMCOMMUNICATION." This error is not fatal in and of itself, but taken in context with the deficiencies below, augments the dismissal of this petition.

The text search query fails for lack of inclusion of applicable terms, and their synonyms, as used in the claims of the invention. These include, without limitation: **managing**, **lifecycle**, **telephone call**, **treading**, **concepts**, **communication**, **active in parallel**, and **software**.

Additionally, the reported text search query fails to include several terms which may reveal applicable prior art. For example, the terms PBX, telephone exchange, private branch exchange, electronic private automatic branch exchange, call processing, computer telephony integration, and call-routing, along with synonyms thereof, should be included in the search string.

Further, the reported text search query fails to include several terms which may reveal applicable prior art. For example, the terms **telephony**, **computer network**, **signaling server**, **signaling protocol**, **Common Gateway Interface**, **Call/C**, **General-purpose Language**, **Session Initiation Protocol**, and **Media Gateway Control Protocol**, along with synonyms thereof, should be included in the search string.

Finally, the text search query also fails to use many common synonyms which may reveal applicable prior art. For example: Petitioner uses the term **abstract model** while failing to include the terms **high level abstraction**, **representation**, **descriptive interpretation**, and **simulation**; **telecommunication** while failing to include the terms **telecom**, **transmission signals**, and **electronic transmission**; **TS-DSL / TS DSL** while failing to include the term **Telecom Service Domain Specific Language**; **program** while failing to include the terms **code** and **software**; **service** while failing to include the terms **provider**, **supplier**, and **source**; **template** while failing to include the terms **guide** and **outline**; **library** while failing to include the terms **record** and **documentation**; **construct?** while failing to include the terms **form**, **build**, **create**, and **assemble**; **domain** while failing to include the term **area**.

Note that the above listed terms and synonyms are not meant to be an exhaustive list, merely an example of various terms and synonyms that can be used to produce a more comprehensive prior art search. Nor is this objection limited to only those sets of search terms listed; each search term used should be evaluated for applicable synonyms. Additionally, searches utilizing other databases should be modified to include the abovementioned terms and synonyms.

III. M.P.E.P. § 708.02(a)(I) sets forth the prerequisite documentation required for a new application to be granted accelerated examination status. This section states, in relevant part:

A new application may be granted accelerated examination status under the following conditions:

(I) At the time of filing, applicant must provide in support of the petition an accelerated examination support document.

(1) **An accelerated examination support document must include an information disclosure statement (IDS) in compliance with 37 CFR 1.98**

citing <u>each reference</u> deemed most closely related to the subject matter of each of the claims.

(2) For each reference cited, the accelerated examination support document must include an identification of all the limitations in the claims that are disclosed by the reference specifying where the limitation is disclosed in the cited reference.

(3) The accelerated examination support document must include a detailed explanation of how each of the claims are patentable over the references cited with the particularity required by 37 CFR 1.111(b) and (c).

(4) The accelerated examination support document must include a concise statement of the utility of the invention as defined in each of the independent claims (unless the application is a design application).

(5) The accelerated examination support document must include **a showing of where each limitation of the claims finds support under the first paragraph of 35 U.S.C. 112 in the written description of the specification.** If applicable, the showing must also identify:

(i) each means- (or step-) plus-function claim element that invokes consideration under 35 U.S.C. 112, paragraph 6; and

(ii) the structure, material, or acts in the specification that correspond to each means- (or step-) plus-function claim element that invokes consideration under 35 U.S.C. 112, paragraph 6. If the application claims the benefit of one or more applications under title 35, United States Code, the showing must also include where each limitation of the claims finds support under the first paragraph of 35 U.S.C. 112 in each such application in which such support exists.

(6) The accelerated examination support document must identify any cited references that may be disqualified as prior art under 35 U.S.C. 103(c).

The Petition is deficient with respect to M.P.E.P. § 708.02(a)(I) (as bolded supra).

The Petition documentation on file with the United States Patent and Trademark Office contain a total of twelve (12) references (9 US Patents, 1 PGPUB, 1 Foreign Patent document and 1 Non-Patent Literature); however, the AESD provided only provide discussions for three (3) of the references cited (LEE, MARTIN and HUANG). The accelerated examination support document (AESD) **failed include any identification and explanation for the other nine (9) references listed in the information disclosure statement (IDS) of the AESD**. Correction is required. If Petitioner wishes to cite references that are not required in an AESD for the examiner to consider, Petitioner may submit such references in a separate IDS in compliance with 37 CFR §1.97 and §1.98. Petitioner should clearly identify the IDS of the AESD that is in support of the petition to make special and, similarly, Petitioner should clearly identify the separate IDS that is not in support of the petition.

The Accelerated Examination Support Document is required to provide a showing of where each limitation of each claim finds support (separately identified) under 35 USC 112, first paragraph, in the written description of the specification. Petitioner identifies the support for the claimed features by referring to at least Figs. 1-11, and paragraphs [004] and [0009] of the specification rather than by page, line and corresponding element in the figures. As such each claim feature is *not **separately identified** with its corresponding support element.* Petitioner is required to identify each claim limitations and the corresponding support in the cited portions ***(page, line, and corresponding elements in the figures)*** where the instant claim language finds corresponding support.

Because the petition fails to satisfy all of the criteria set forth above, the petition to make special is **DISMISSED**.

Petitioner is given a single opportunity to perfect the petition. Any request for reconsideration of this decision must be submitted within 1 (one) month or 30 (thirty) days, whichever is longer, (no extension of time under 37 CFR 1.136(a)) from the date of this decision in order to be considered timely. Any request for reconsideration must address the deficiencies indicated above.

Petitioner is reminded that, upon granting of the special status of the application on request for reconsideration, the application will be processed expeditiously. However, due to the dismissal of the instant petition, examination may not be completed within twelve months of the filing date of the application.

Until the renewed petition is submitted, the application will be returned to the examiner's docket to await treatment on the merits in the normal order of examination.

Any inquiry regarding this decision should be directed the undersigned whose telephone number is (571) 272-4147. If attempts to reach the undersigned by telephone are unsuccessful, Tod Swann, Quality Assurance Specialist, can be reached at (571) 272-3612.

/Kim Huynh/

Kim Huynh
Technology Center 2100
Computer Architecture, Software, and
Information Security

UNITED STATES PATENT AND TRADEMARK OFFICE

UNITED STATES DEPARTMENT OF COMMERCE
United States Patent and Trademark Office
Address: COMMISSIONER FOR PATENTS
P.O. Box 1450
Alexandria, Virginia 22313-1450
www.uspto.gov

APPLICATION NO.	FILING DATE	FIRST NAMED INVENTOR	ATTORNEY DOCKET NO.	CONFIRMATION NO.
12/119,554	05/13/2008	Shiri Kremer-Davidson	20140-00399-US	3270

30678 , 7590 02/23/2009
CONNOLLY BOVE LODGE & HUTZ LLP
1875 EYE STREET, N.W.
SUITE 1100
WASHINGTON, DC 20006

EXAMINER
DAM, TUAN QUANG

ART UNIT	PAPER NUMBER
2192	

MAIL DATE	DELIVERY MODE
02/23/2009	PAPER

Please find below and/or attached an Office communication concerning this application or proceeding.

The time period for reply, if any, is set in the attached communication.

UNITED STATES PATENT AND TRADEMARK OFFICE

Commissioner for Patents
United States Patent and Trademark Office
P.O. Box 1450
Alexandria, VA 22313-1450
www.uspto.gov

January 22, 2009

MR. MYRON KEITH WYCHE
CONNOLY, BOVE, LODGE, & HUTZ LLP
1875 EYE STREET, N.W.
SUITE 1100
WASHINGTON, DC 2006

In re Application of: Shiri KREMER-DAVIDSON, et al. Serial No.: 12/119,554 Filed: May 13, 2008 Docket: 20140-00399-US Title: PROTOCOL INDEPENDENT TELEPHONY CALL LIFECYCLE MANAGEMENT SCHEME	DECISION ON RENEWED PETITION TO MAKE SPECIAL (ACCELERATED EXAMINATION) UNDER 37 C.F.R. § 1.102(D) AND M.P.E.P. § 708.02

This is a decision on the Petition To Make Special under 37 C.F.R. § 102(d) and M.P.E.P. § 708.02(VIII): Accelerated Examination, filed on September 15, 2008.

The petition is **DENIED**.

In the decision mailed August 13, 2008 dismissing the Petition To Make Special filed May 13, 2008, applicant was informed that the following corrections would be required in order to allow a grant of the petition:

1) That "[r]egarding the requirement of MPEP § 708.02(a)(H)(1), the "preexamination search must involve U.S. patents and patent application publications, foreign patent documents, and non-patent literature..." (see part (A) on pg. 4 of the August 13, 2008 decision)

2) That "[i]f Petitioner wishes to cite references that are not required in an AESD for the examiner to consider, Petitioner may submit such references in a separate IDS in compliance with 37 CFR § 1.97 and § 1.98. Petitioner should clearly identify the IDS of the AESD that is in support of the petition to make special and, similarly, Petitioner should clearly identify the separate IDS that is not in support of the petition." (see last paragraph on pg. 6 of the August 13, 2008 decision)

3) That "[p]etitioner is required to identify each claim limitations [sic] and the corresponding support in the cited portions (page, line, and corresponding elements in the figures) where the instant claim language finds corresponding support." (see first paragraph on pg. 7 of the August 13, 2008 decision)

Petitioner's renewed request for Accelerated Examination has failed to correct the above three deficiencies and as such the petition filed September 15, 2008 must be denied.

As to item 1 above, petitioner's amended pre-examination search document was amended to state that a classified search of the US PGPUB database was performed. However, as petitioner's original pre-examination search document (filed May 13, 2008) failed to indicate any data file search area for the classified search area, and the entirety of the search was text search based, petitioner has created a situation where it is now unclear if petitioner actually performed a classified search of the US PATENT database as well as the US PGPUB database. Given the evidence supplied, there is a presumption now that only a classified search of US PGPUB documents was performed.

As to item 2 above, petitioner responded by filing two separate IDS documents. However, petitioner failed to clearly label which IDS document was in support of the AESD and which IDS document was for general examiner IDS consideration. Furthermore, both new IDS documents fail to cite the Lee, Martin, and Huang references that are discussed in the AESD. The new IDS document which appears to be in support of the AESD now cites only the newly found reference to McClung. This has created a situation where the AESD discusses four references, but the IDS in support thereof only cites a single reference.

As to item 3 above, petitioner responded by replacing the paragraph number citations utilized in the May 13, 2008 submission with page and line number references. Petitioner failed to **separately identify** ***each*** claim limitation and the corresponding support as required.

Because the renewed petition of September 15, 2008 failed to satisfy the above three requirements from the petition decision of August 13, 2008, the petition to make special is **DENIED**.

As this was petitioners single opportunity to perfect the petition, further requests for reconsideration will be denied.

The application will be returned to the examiner's docket to await treatment on the merits in the normal order of examination.

Any inquiry regarding this decision should be directed to the undersigned whose telephone number is (571)272-3591.

Gail Hayes

Gail Hayes
Technology Center 2100

RLE

UNITED STATES PATENT AND TRADEMARK OFFICE

UNITED STATES DEPARTMENT OF COMMERCE
United States Patent and Trademark Office
Address: COMMISSIONER FOR PATENTS
P.O. Box 1450
Alexandria, Virginia 22313-1450
www.uspto.gov

3M INNOVATIVE PROPERTIES COMPANY
PO BOX 33427
ST. PAUL, MN 55133-3427

Mail Date: 04/20/2010

Applicant	: Michael G. Costello	: DECISION ON REQUEST FOR
Patent Number	: 7651627	: RECALCULATION of PATENT
Issue Date	: 01/26/2010	: TERM ADJUSTMENT IN VIEW
Appliction No	: 12/119,571	: OF WYETH AND NOTICE OF INTENT TO
Filed	: 05/13/2008	: ISSUE CERTIFICATE OF CORRECTION
		:

The Request for Recalculation is **GRANTED** to the extent indicated.

The patent term adjustment has been determined to be **0** days. The USPTO will *sua sponte* issue a certificate of correction reflecting the amount of PTA days determined by the recalculation.

Prior to the issuance of the certificate of correction, the USPTO will afford patentee an opportunity to be heard and request reconsideration. Accordingly, patentee has **one month or thirty (30) days**, whichever is longer, to file a request for reconsideration of this patent term adjustment calculation. See 35 U.S.C. 154(b)(3)(B)(ii) and 37 CFR 1.322(a)(4). No extensions of time will be granted under 37 CFR 1.136.

Patentee should use document code PET.OP if electronically filing a request for reconsideration of this patent term adjustment calculation. The patentee must also include the information required by 37 CFR 1.705(b)(2) and the fee required by 37 CFR 1.18(e). If patentee does not file a timely request for reconsideration of this patent term adjustment calculation including the information required by 37 CFR 1.705(b)(2) and the fee required by 37 CFR 1.18(e), the USPTO will issue a certificate of correction reflecting the PTA determination noted above.

Patentee should be aware that in order to preserve the right to review in the United States District Court for the District of Columbia of the USPTO patent term adjustment determination, patentee must ensure that he or she also take the steps required under 35 U.S.C. 154(b)(4)(A) in a timely manner. Nothing in the request for recalculation should be construed as providing an alternative time frame for commencing a civil action under 35 U.S.C. 154(b)(4)(A).

Any questions concerning this decision should be directed to the Office of Patent Legal Administration at 571-272-7702.

UNITED STATES PATENT AND TRADEMARK OFFICE

UNITED STATES DEPARTMENT OF COMMERCE
United States Patent and Trademark Office
Address: COMMISSIONER FOR PATENTS
P.O. Box 1450
Alexandria, Virginia 22313-1450
www.uspto.gov

APPLICATION NO.	FILING DATE	FIRST NAMED INVENTOR	ATTORNEY DOCKET NO.	CONFIRMATION NO.
12/119,588	05/13/2008	Shiri Kremer-Davidson	20140-00400-US	3322

30678 7590 02/10/2009
CONNOLLY BOVE LODGE & HUTZ LLP
1875 EYE STREET, N.W.
SUITE 1100
WASHINGTON, DC 20006

EXAMINER
BULLOCK JR, LEWIS ALEXANDER

ART UNIT	PAPER NUMBER
2193	

MAIL DATE	DELIVERY MODE
02/10/2009	PAPER

Please find below and/or attached an Office communication concerning this application or proceeding.

The time period for reply, if any, is set in the attached communication.

UNITED STATES PATENT AND TRADEMARK OFFICE

Commissioner for Patents
United States Patent and Trademark Office
P.O. Box 1450
Alexandria, VA 22313-1450
www.uspto.gov

February 3, 2009

MR. MYRON KEITH WYCHE
CONNOLLY, BOVE, LODGE, & HUTZ LLP
1875 EYE STREET, N.W.
SUITE 1100
WASHINGTON, DC 20006

In re Application of: Shiri Kremer-Davidson et al. Serial No: 12/119,588 Filed: May 13, 2008 Docket: 20140-00400-US Title: METHOD AND TOOLING FOR THE DEVELOPMENT OF TELECOM SERVICES	DECISION ON PETITION TO MAKE SPECIAL FOR NEW APPLICATION UNDER 37 C.F.R. § 1.102 & M.P.E.P. § 708.02

This is a decision on the petition filed on May 13, 2008 to make the above-identified application special for accelerated examination procedure under 37 C.F.R. § 1.102(d).

The petition to make the application special is **DISMISSED**.

REGULATION AND PRACTICE

A grantable petition to make special under 37 C.F.R. § 1.102(d) and pursuant to the "Change to Practice for Petitions in Patent Applications to Make Special and for Accelerated Examination" published in the Federal Register on June 26, 2006 (71 Fed. Reg. 36323), must satisfy the following conditions:

I. Conditions Regarding the Application:

1. the application must be a non-reissue utility or design application filed under 37 CFR 1.111(a);
2. the application, the petition and the required fees must be filed electronically using the USPTO's electronic filing system (EFS), or EFS-web; if not filed electronically, a statement asserting that EFS and EFS-web were not available during the normal business hours.
3. at the time of filing, the application must be complete under 37 CFR 1.51 and in condition for examination;
4. the application must contain three or fewer independent claims and twenty or fewer total claims and the claims must be directed to a single invention.

II. Conditions Regarding the Petition:

The petition must:

1. be filed with the application;
2. include a statement that applicant agrees not to separately argue the patentability of any independent claim during any appeal in the application;
3. include a statement that applicant agrees to make an election without traverse in a telephone interview.
4. include a statement that applicant agrees to conduct such an interview when requested by the examiner.
5. include a statement, made based on a good faith belief, that a preexamination search in compliance with the following requirements, was conducted, including an identification of the filed of search by United States class and subclass, where applicable, and for database searches, the search logic or chemical structure or sequence used as a query, the name of the file(s) searched and the database service, and the date of the search.

   The preexamination search must:

   5.1 involve U.S. patents and patent application publications, foreign patent documents, and non-patent literature, unless the applicant can justify with reasonable certainty that no references more pertinent than those already identified are likely to be found in the eliminated sources and includes such a justification with this statement;

   5.2 be directed to the claimed invention and encompass all of the features of the claims, giving the claims the broadest reasonable expectation;

   5.3 encompass the disclosed features that may be claimed.

6. must provide in support of the petition an accelerated examination support document.

   An accelerated examination support document must include:

   6.1 an information disclosure statement (IDS) in compliance with 37 CFR 1.98 citing each reference deemed most closely related to the subject matter of each of the claims;

   6.2 an identification of all the limitations in the claims that are disclosed by the reference specifying where the limitation is disclosed in the cited reference;

   6.3 a detailed explanation of how each of the claims are patentable over the references cited with particularity required by 37 CFR 1.111(b) and (c);

   6.4 a concise statement of the utility of the invention as defined in each of the independent claims (unless the application is a design application);

   6.5 a showing of where each limitation of the claims finds support under 35 USC 112, first paragraph, in the written description of the specification. If applicable, the showing must also identify: (1) each means- (or step) plus-function claim element that invokes consideration under 35 UDC 112, sixth paragraph; and (2) the structure, material, or acts in the specification that corresponds to each means- (or step) plus-function claim element that invokes consideration under 35 UDC 112, sixth paragraph; if the application claims the benefit of one or more applications under title 35, United States Code, the showing must also include where each limitation of the claims finds support under 35 USC 112, first paragraph, in each such application in which such supports exists;

   6.6 an identification of any cited references that may be disqualified under 35 USC 103(c).

REVIEW OF FACTS

The conditions I.1 to I.4, II.1 to II.5, II.5.3 above are met. However, the petition fails to comply with conditions II.5.1 and II.5.2 above. Therefore, the petition fails to meet the required conditions to be accorded special status under the accelerated examination procedure.

Regarding the requirement of MPEP § 708.02(a)(I.)(H)[1] and items II.5.1 and II.5.2 above, the pre-examination search must be directed to the (instant) claimed invention. The "preexamination search must involve U.S. patents and patent application publications, foreign patent documents, and non-patent literature ..." Text searches of section (A) of the Pre-examination Search Document should cover individual features of the claims themselves as well as a combination of features. The text search for US and foreign documents as well as for non-patent literature should include appropriate terms, Boolean operators, truncations, and proximities if applicable.

It is unclear from Petitioner's documentation whether Petitioner's classification search performed on April 7-10, 2008 in class 717 encompassed United States patents only, United States patent application publications only, or both. The pre-examination search document is silent as to the coverage of the classification search. Without an express statement that **both** United States patents and patent application publications were searched, this petition is deficient.

Regarding the requirement of MPEP § 708.02(a)(H)(2), the pre-exam search must be directed to the (instant) claimed invention. Based upon the subject matter of this Petition, a search in the following additional class and/or subclasses should be included in order to provide full coverage of where the most pertinent references are most likely to be found:

U.S. Field of Search:
717/105 (covers the selection and assembling of parts aspect of the claim)
717/106-109 (covers the executable code generation aspect of the claim)
717/118 (covers the claimed "Java code" aspect)
703/13, 21-22 (covers the abstract modeling aspect of the claim)

The aforementioned additional classes and/or sub-classes are not meant as an exhaustive list, merely a representative listing of applicable search areas which have not been included in the Petitioner's pre-exam search. It is incumbent on the Petitioner to evaluate all applicable classes and/or sub-classes for pertinent prior art.

Regarding the requirement of MPEP § 708.02(a)(H)(3), the text search query reported by the Petitioner fails for its lack of depth and breadth to cover all of the concepts the claims recite. Initially, it is noted that Petitioner's search of DialogWEB, set S2 contains the spelling error "TELEMCOMMUNICATION". This error is not fatal in and of itself, but taken in context with the deficiencies below, augments the dismissal of this petition.

The text search queries reported by Petitioner fail for lack of use of appropriate truncation operators. While a very few token text search queries include a truncation operator, the vast majority of Petitioner's text search queries fail to make use of truncation operators when such operators would be appropriate. E.g., petitioner's USPTO PATFT search of US-PGPUB documents searches for "telecom" without truncation, which omits from the search results the terms "telecommunication", "telecommunications", "telecommunicating", etc. The DialogWEB search searches for "model" without a truncation operator, thereby omitting "models", "modeling", "modeler", etc. from the search results.

---

[1] MPEP 8th ed. rev 6 September 2007

Finally, the text search queries fail to use many common synonyms and/or the full spellings of many acronyms, thereby omitting from the search results relevant documents which utilize these synonyms and/or full spellings. E.g.:

Term Used	Omitted Terms/Synonyms
IDE	integrated development environment
abstract model	model, high level abstraction, representation, descriptive interpretation, simulation
telecom	telecommunication, transmission, transmit, transmission signals, electronic transmission
UML and unified modeling language	code, software, language
TS-DSL and TS DSL	telecom service domain specific language
construct	form, build, create, assemble
domain	area
library	record, documentation
template	guide, outline
service	provider, supplier, source

Additionally, Petitioner's text search queries searched UML as unified modeling language in some instances, and as universal modeling language in other instances. The acronym UML should be searched as both unified modeling language and universal modeling language in all instances in order to not overlook potentially relevant prior art.

Note that the above listed terms and synonyms are not meant to be an exhaustive list, merely an example of various terms and synonyms that can be used to produce a more comprehensive prior art search. Nor is this objection limited to only those sets of search terms listed; each search term used should be evaluated for applicable synonyms. Additionally, searches utilizing other databases should be modified to include the above mentioned terms and synonyms.

Clarification and/or correction are required.

Examples of various search strategies can be found on USPTO website, using the link http://www.uspto.gov/web/patents/accelerated/ and clicking on "Sample Accelerated Examination Support Document".

Regarding the requirement of MPEP § 708.02(a)(I)(1) and section II.6.1 above, the documentation on file with the United States Patent and Trademark Office contains a single IDS statement citing a total of ten (10) references, of which only two (2) of the cited references are discussed in the Accelerated Examination Support Document ("AESD"). The AESD has failed to include any identification and explanation for the other eight (8) references listed in the

information disclosure statement accompanying the AESD. If Petitioner wishes to cite references that are not required in support of the AESD for the examiner to consider, Petitioner may submit such references in a separate IDS in compliance with 37 CFR § 1.97 and § 1.98. Petitioner should clearly identify the IDS of the AESD that is in support of the petition to make special and which should cite all documents discussed in the AESD and, similarly, Petitioner should clearly identify the separate IDS that is not in support of the petition to make special. Correction is required.

Regarding the requirement of MPEP § 708.02(a)(I.)(I)(3) and item II.6.2 above, the AESD must include an identification of all the limitations in the claims that are disclosed by the references specifying where the limitation is disclosed in the cited reference. In the AESD section 9(B), Petitioner's discussion of the Hinchey et al. and Ferrell et al. references fail to sufficiently compare each of Petitioner's claim elements to each reference's disclosures. Discussion of the limitations disclosed by the prior art must be individually compared to each claim limitation of Petitioner's claimed invention. In addition, Petitioner must point to the specific location in the prior art reference where said limitation is located. Petitioner's discussion of the prior art references is deficient in this respect.

With regard to the Hinchey et al. and Farrell et al. references, Petitioner does not adequately compare the instant claim limitations with the prior art, instead relying on a summary of the reference disclosures. Furthermore, Petitioner fails to point out the locations in which any claimed limitations are present within the cited references. Petitioner's treatment is further deficient by failing to be precise, instead relying on only one single paragraph reference to each of the two discussed references.

Petitioner is required to provide a detailed discussion of the pertinent subject matter disclosed in each of the references, specifically identifying each claim limitation and corresponding disclosure within the reference, citing to specific relevant portions of each reference by way of figure, page, paragraph and line numbers, as appropriate. Correction is required

Regarding the requirement of MPEP § 708.02(a)(I.)(I)(3) and item II.6.3 above the AESD must include a detailed explanation of how each of the claims are patentable over the references cited with particularity required by 37 CFR 1.111(b) and (c). In the AESD section 9(C) Petitioner fails to adequately discuss "specific distinctions" between the prior art and the claimed invention. Instead Petitioner relies on the general allegation that "[n]one of Hinchey et al. or Farrell et al. disclose as claim 1 recites:" This discussion is deficient in both scope and breadth as each claim limitation must be compared to each piece of prior art, pointing out both the **similarities** and **differences** between the claimed invention and the cited references.

Petitioner's cursory treatment of the references does not detail, with the particularity called for in 37 CFR § 1.111(b), the relevancy of the prior art teaching in order to sufficiently set forth a case distinguishing the limitations claimed to be patentable in relation to the given reference. The petition must specifically show, for each independent claim, **specific language** that distinguishes it over each given reference in order to specify "how the claimed subject matter is patentable over the references." Correction is required.

Finally, with respect to the requirement of MPEP § 708.02(a)(I.)(I)(5) and item II.6.5 above, the AESD must provide a showing of where each limitation of the claims finds support under 35 USC 112, first paragraph, in the written description of the specification. Petitioner's AESD section 9(E) fails to provide the requisite showing of where each claim limitation finds support under 35 USC 112, first paragraph, in the written description of the specification. Instead, section 9(E) merely makes a cursory statement that support is found in the spec within two paragraphs and the drawings. Petitioner is required to identify each claim limitation and the corresponding support in the written description by citation to page, paragraph, line, and corresponding figure elements as appropriate. Correction is required.

DECISION

For the above-stated reasons, the petition is **Dismissed**. The application will therefore be taken up by the examiner for action in its regular turn.

Petitioner is given a **single** opportunity to perfect the petition. Any request for reconsideration of this decision must be submitted within 1 (one) month or 30 (thirty) days, whichever is longer, (no extension of time under 37 CFR 1.136(a)) from the date of this decision in order to be considered timely. Any request for reconsideration must address **all of** the deficiencies indicated above.

Petitioner is reminded that, upon granting of the special status of the application on request for reconsideration, the application will be processed expeditiously. However, due to the dismissal of the instant petition, examination may not be completed within twelve months of the filing date of the application.

Any inquiry regarding this decision should be directed Gail Hayes, Quality Assurance Specialist, at (571) 272-3591.

_____

Gail Hayes, Quality Assurance Specialist
Technology Center 2100

RLE

UNITED STATES PATENT AND TRADEMARK OFFICE

UNITED STATES DEPARTMENT OF COMMERCE
United States Patent and Trademark Office
Address: COMMISSIONER FOR PATENTS
P.O. Box 1450
Alexandria, Virginia 22313-1450
www.uspto.gov

APPLICATION NO.	FILING DATE	FIRST NAMED INVENTOR	ATTORNEY DOCKET NO.	CONFIRMATION NO.
12/119,588	05/13/2008	Shiri Kremer-Davidson	20140-00400-US	3322

30678 7590 03/18/2009
CONNOLLY BOVE LODGE & HUTZ LLP
1875 EYE STREET, N.W.
SUITE 1100
WASHINGTON, DC 20006

EXAMINER
VU, TUAN A

ART UNIT	PAPER NUMBER
2193	

MAIL DATE	DELIVERY MODE
03/18/2009	PAPER

Please find below and/or attached an Office communication concerning this application or proceeding.

The time period for reply, if any, is set in the attached communication.

UNITED STATES PATENT AND TRADEMARK OFFICE

Commissioner for Patents
United States Patent and Trademark Office
P.O. Box 1450
Alexandria, VA 22313-1450
www.uspto.gov

March 16, 2009

MYRON KEITH WYCHE
CONNOLLY BOVE LODGE & HUTZ LLP
1875 EYE STREET, N.W.
SUITE 1100
WASHINGTON DC 20006

In re Application of: Shiri Kremer-Davidson et al.
Serial No: 12/119,588
Filed: May 13, 2008
Docket: 20140-00400-US
Title: Method and Tooling for the Development of Telecom Services

DECISION ON PETITION TO MAKE SPECIAL FOR NEW APPLICATION UNDER 37 C.F.R. § 1.102 & M.P.E.P. § 708.02

This is a decision on the corrected petition filed on March 16, 2009 to make the above-identified application special for accelerated examination procedure under 37 C.F.R. § 1.102(d).

The corrected petition to make the application special is **GRANTED**.

The application is eligible for accelerated examination and the petition complies with the conditions for granting the application special status pursuant to the "Change to Practice for Petitions in Patent Applications to Make Special and for Accelerated Examination" published June 26, 2006, in the Federal Register. (71 Fed. Reg. 36323).

The prosecution of the instant application will be conducted expeditiously according to the following guidelines.

1. The application will be docketed to an examiner and taken up for action within two weeks of the date of this decision.

2. Restriction Practice:
   If the examiner determines that the claims are not directed to a single invention, a telephone request to elect one single invention will be made pursuant to MPEP 812.01. As a prerequisite to the grant of this petition, the applicant has agreed to make an oral election, by telephone, without traverse. If the applicant refuses to make an election without traverse, or the examiner cannot reach the applicant after a reasonable effort, the examiner will treat the first claimed invention (invention defined by claim 1) as having being constructively elected without traverse for examination.

3. Office action:

If it is determined that, after appropriate consultation, there is a potential rejection or any other issue to be addressed, the examiner will telephone the applicant and arrange an interview to discuss and resolve the issue. An Office action, other than a Notice of Allowance and Fee(s) Due (Notice of Allowance), will not be issued unless either: 1) an interview was conducted but did not result in agreed to action that places the application in condition for allowance, or, 2) a determination is made that an interview would be unlikely to result in the application being placed in condition for allowance, and 3) an internal conference has been held to review any rejection of any claim.

4. Time for Reply:
An Office action other than a Notice of Allowance or a final Office action will set a shortened statutory period of one month or thirty days, whichever is longer, for reply with no extension of time available under 37 CFR 1.136(a). Failure to timely file a reply within this non-extendible period for reply will result in the abandonment of the application.

5. Reply by Applicant:
A timely reply to an Office action other than the Notice of Allowance must be submitted electronically via EFS or EFS-web and limited to addressing the rejections, objections and requirement made. Any amendment that attempts to: 1) add claims which would result in more than three pending independent claims or more than twenty pending total claims; 2) present claims not encompassed by the pre-examination search or an updated accelerated examination support document; or 3) present claims that are directed a non-elected invention or an invention other than that previously claimed and examined in the application, will be treated as not fully responsive and will not be entered.

   For any amendment to the claims (including any new claim) that is not encompassed by the accelerated examination support document, applicant must provide an updated accelerated examination support document that encompasses the amended or new claims at the time of filing of the amendment.

   To proceed expeditiously with the examination, it is recommended that a reply with amendments made to any claim or with any new claim being added be accompanied by an updated accelerated examination support document or a statement explaining how the amended or new claim is supported by the original accelerated examination support document.

6. Information Disclosure Statement (IDS):
Any IDS filed during prosecution must be submitted electronically via EFS or EFS-web, accompanied by an updated accelerated examination support document, and be in compliance with 37 CFR 1.97 and 1.98.

7. Post-Allowance Processing:
To expedite processing of the allowed application into a patent, the applicant must: 1) pay the required fees within one month of the date of the Notice of Allowance, and 2) not file any post allowance papers not required by the Office. In no event may the issue fee be paid and accepted later than three months from the date of the Notice of Allowance.

8. After-Final and Appeal Procedures:

To expedite prosecution, after receiving the final Office action, applicant must: 1) promptly file a notice of appeal, an appeal brief and appeal fees; and 2) not request a pre-appeal brief conference.

Any amendment, affidavit or other evidence filed after final Office action must comply with applicable rules and the requirements outlined in numbered paragraphs 5 and 6 above.

On appeal, the application will proceed according to normal appeal procedures. After appeal, the application will again be treated special.

9. Proceedings Outside the Normal Examination Process:
   If the application becomes involved in a proceeding that is outside the normal examination process (e.g., a secrecy order, national security review, interference proceeding, petitions under 37 CFR 1.181, 182 or 183), the application will be treated special before and after such proceeding.

10. Final Disposition:
    The twelve month goal of this accelerated examination procedure ends with a final disposition. The mailing of a final Office action, a Notice of Allowance, the filing of a Notice of Appeal, or the filing of a Request for Continued Examination (RCE) is the final disposition.

If, during prosecution, a paper is not filed electronically using EFS-web, a reply is filed but is not fully responsive, the application is involved in an appeal, or a proceeding outside normal examination process, the application will still be examined expeditiously, however, the final disposition may occur more than twelve months from the filing of the application.

Any inquiry regarding this decision should be directed to Gail Hayes, Quality Assurance Specialist, (571) 272-3591.

Gail Hayes

Gail Hayes, Quality Assurance Specialist
Technology Center 2100

RLE

UNITED STATES PATENT AND TRADEMARK OFFICE

Commissioner for Patents
United States Patent and Trademark Office
P.O. Box 1450
Alexandria, VA 22313-1450
www.uspto.gov

AMERICAN PIONEER VENTURES
ATTN: DANIAR HUSSAIN
845 THIRD AVENUE
6th FLOOR
NEW YORK NY 10022

MAILED

NOV 05 2009

OFFICE OF PETITIONS

In re Application of	:	
Zubrin et al.	:	
Application No. 12/119,597	:	ON PETITION
Filed: May 13, 2008		
Attorney Docket No. RZ-007R	:	
	:	

This is a decision on the petition under 37 CFR 1.102(c) (2)(ii), filed November 6, 2008, to make the above-identified application special based on the invention materially contributing to the development or conservation of energy resources as set forth in M.P.E.P. § 708.02, Section VI.

The petition is **DISMISSED**.

A petition to make special filed on or after August 25, 2006 will only be granted if it is based upon applicant's health or age or is under the PPH pilot program, or if it complies with the requirements set forth in MPEP § 708.02(a).

The petition filed November 6, 2008 was not filed under the PPH program and does not meet the requirements set forth in MPEP § 708.02(a).

Telephone inquiries concerning this decision should be directed to Joan Olszewski at 571-272-7751.

All other inquiries concerning either the examination or status of the application should be directed to the Technology Center.

The application is being forwarded to the Technology Center Art Unit 3676 for action in its regular turn.

David Bucci
Petitions Examiner
Office of Petitions

UNITED STATES PATENT AND TRADEMARK OFFICE

Commissioner for Patents
United States Patent and Trademark Office
P.O. Box 1450
Alexandria, VA 22313-1450
www.uspto.gov

JAMES J. RALABATE
5792 MAIN ST.
WILLIAMSVILLE NY 14221

COPY MAILED

NOV 17 2008

OFFICE OF PETITIONS

In re Application of
Michael Barry Thomson
Application No. 12/119,605
Filed: May 13, 2008
Attorney Docket No. 20070225

: DECISION REFUSING STATUS
: UNDER 37 CFR 1.47(b)

This decision is in response to the petition filed May 13, 2008 under 37 CFR 1.47(b).

The petition is **DISMISSED.**

Rule 47 applicant is given TWO MONTHS from the mailing date of this decision to respond, correcting the below-noted deficiencies. Any response should be entitled "Request for Reconsideration of Petition Under 37 CFR 1.47(a)" and may include an oath or declaration executed by the inventor. **Failure to respond will result in abandonment of the application.** Any extensions of time will be governed by 37 CFR 1.136(a).

The above-identified application, naming Michael Barry Thomson as the sole inventor, was filed on May 13, 2008 without an executed oath or declaration and with the instant petition claiming that the sole inventor refuses to sign the oath or declaration and seeking status under 37 CFR 1.47(b).

A grantable petition under 37 CFR 1.47(b) requires:

(1) proof that the non-signing inventor cannot be reached or refuses to sign the oath or declaration after having been presented with the application papers (specification, claims and drawings);

(2) an acceptable oath or declaration in compliance with 35 U.S.C. §§ 115 and 116;

(3) the petition fee;

(4) a statement of the last known address of the non-signing inventor;

(5) proof of proprietary interest, and

(6) proof of irreparable damage.

The petition lacks item (1).

In regards to item (1), petitioner has not provided sufficient proof that a copy of the complete application (specification including claims, drawings, if any, and the

Declaration) was sent or given to the non-signing inventor.[1]

No details regarding the efforts accompany the petition. Petitioner has only argued that the non-signing inventor "has not been located by Xerox authorized representatives after numerous diligent efforts in 2007 and 2008. At least 10 attempts to reach Mr. Thomson were made in correspondence to his last known addresses and last known e-mail address" but no such proof of either the correspondences having been mailed or the diligent efforts have been provided.

Petitioners may show proof that a copy of the application was sent or given to the non-signing inventor for review by providing a copy of the cover letter transmitting the application papers to the non-signing inventors or details given in an affidavit or declaration of facts by a person having first hand knowledge of the details.

Likewise, before a refusal can be alleged, petitioners must demonstrate that the non-signing inventor was sent or given a copy of the application papers. Petitioners must provide proof that the inventor refused to sign the declaration after being sent or given a copy of the application papers. If there is a written refusal, petitioners must provide a copy thereof with any renewed petition. If the refusal was made orally to a person, then that person must provide details of the refusal in an affidavit or declaration of facts.

Additionally, the petition fee for a petition under 37 CFR 1.47 is set at $200, not $130 as has been indicated in the petition. Thus, petitioner's deposit account no. 24-0337 has been charged in the amount of $200.

Further correspondence with respect to this matter should be addressed as follows:

By mail: Mail Stop Petition
Commissioner for Patents
P.O. Box 1450
Alexandria, VA 22313-1450

By FAX: (571) 273-8300

Telephone inquiries concerning this matter may be directed to the undersigned Petitions Attorney at (571) 272-3212.

Patricia Faison-Ball

Patricia Faison-Ball
Senior Petitions Attorney
Office of Petitions

---

[1] MPEP 409.03(d)

UNITED STATES PATENT AND TRADEMARK OFFICE

Commissioner for Patents
United States Patent and Trademark Office
P.O. Box 1450
Alexandria, VA 22313-1450
www.uspto.gov

JAMES J. RALABATE
5792 MAIN ST.
WILLIAMSVILLE NY 14221

COPY MAILED

JAN 16 2009

OFFICE OF PETITIONS

In re Application of
Michael Barry Thomson
Application No. 12/119,605
Filed: May 13, 2008
Attorney Docket No. 20070225

: DECISION NOTING JOINDER OF
: INVENTOR AND PETITION UNDER
: **37 CFR 1.47(b) DISMISSED** AS
: INVOLVING MOOT ISSUES

This is in response to the request for reconsideration filed December 17, 2008 under 37 CFR 1.47(b)

The above-identified application, naming Michael Barry Thomson as the sole inventor, was filed on May 13, 2008 without an executed oath or declaration and with a petition claiming that the sole inventor refused to sign the oath or declaration and seeking status under 37 CFR 1.47(b). The petition was dismissed in a decision mailed November 17, 2008 because petitioner had not provided sufficient proof that a copy of the complete application (specification including claims, drawings, if any, and the Declaration) was sent or given to the non-signing inventor.[1]

Papers filed December 17, 2008 in reply to the "Decision Refusing Status Under 37 CFR 1.47(b)" mailed November 17, 2008, include a declaration signed by joint inventor Michael Barry Thomson in compliance with 37 CFR 1.63.

In view of the joinder of the previously non-signing joint inventor, further consideration under 37 CFR 1.47(b) is unnecessary.

The renewed petition filed December 17, 2008 is **DISMISSED** as involving moot issues.

This application does not have any rule 1.47(b) status and no such status should appear on the file wrapper. This application need not be returned to this office for any further consideration under 37 CFR 1.47(b).

This matter will be referred to the Office of Patent Application Processing for further pre-examination processing.

Telephone inquiries related to this decision should be directed to the undersigned Petitions Attorney at (571) 272-3212.

Patricia Faison-Ball

Patricia Faison-Ball
Senior Petitions Attorney
Office of Petitions

---

[1] MPEP 409.03(d)

UNITED STATES PATENT AND TRADEMARK OFFICE

UNITED STATES DEPARTMENT OF COMMERCE
United States Patent and Trademark Office
Address: COMMISSIONER FOR PATENTS
P.O. Box 1450
Alexandria, Virginia 22313-1450
www.uspto.gov

APPLICATION NO.	FILING DATE	FIRST NAMED INVENTOR	ATTORNEY DOCKET NO.	CONFIRMATION NO.
12/119,654	05/13/2008	J. Richard Behun	BUR920080024US1 (22181)	3449

45601 7590 09/18/2008
SCULLY, SCOTT, MURPHY & PRESSER, P.C.
400 GARDEN CITY PLAZA
Suite 300
GARDEN CITY, NY 11530

EXAMINER

ART UNIT	PAPER NUMBER
2811	

MAIL DATE	DELIVERY MODE
09/18/2008	PAPER

Please find below and/or attached an Office communication concerning this application or proceeding.

The time period for reply, if any, is set in the attached communication.

UNITED STATES PATENT AND TRADEMARK OFFICE

Commissioner for Patents
United States Patent and Trademark Office
P.O. Box 1450
Alexandria, VA 22313-1450
www.uspto.gov

SCULLY, SCOTT, MURPHY & PRESSER, P.C.
400 Garden City Plaza, Suite 300
Garden City, NY 11530

In re Application of: BEHUN *et al.* Serial No.: 12/119,654 Filed: May 13, 2008 Title: **ELECTROMAGNETIC INTERFERENCE SHIELD FOR SEMICONDUCTORS USING A CONTINUOUS OR NEAR-CONTINUOUS PERIPHERAL CONDUCTING SEAL AND A CONDUCTING LID**	DECISION ON PETITION TO MAKE SPECIAL FOR NEW APPLICATION UNDER 37 C.F.R. § 1.102 & M.P.E.P. § 708.02

This is a decision on the petition filed on May 13, 2008, to make the above-identified application special for accelerated examination procedure under 37 C.F.R. § 1.102(d).

The petition to make the application special is **DISMISSED**.

REGULATION AND PRACTICE

A grantable petition to make special under 37 C.F.R. § 1.102(d) and pursuant to the "Change to Practice for Petitions in Patent Applications to Make Special and for Accelerated Examination" published in the Federal Register on June 26, 2006 (71 Fed. Reg. 36323), must satisfy the following conditions:

I. Conditions Regarding the Application:

1. the application must be a non-reissue utility or design application filed under 37 CFR 1.111(a);

2. the application, the petition and the required fees must be filed electronically using the USPTO's electronic filing system (EFS), or EFS-web; if not filed electronically, a statement asserting that EFS and EFS-web were not available during the normal business hours.

3. at the time of filing, the application must be complete under 37 CFR 1.51 and in condition for examination;

4. the application must contain three or fewer independent claims and twenty or fewer total claims and the claims must be directed to a single invention.

II. Conditions Regarding the Petition:

The petition must:

1. be filed with the application;

2. include a statement that applicant agrees not to separately argue the patentability of any dependent claim during any appeal in the application;

3. include a statement that applicant agrees to make an election without traverse in a telephone interview.

4. include a statement that applicant agrees to conduct such an interview when requested by the examiner.

5. include a statement, made based on a good faith belief, that a preexamination search in compliance with the following requirements, was conducted, including an identification of the field of search by United States class and subclass, where applicable, and for database searches, the search logic or chemical structure or sequence used as a query, the name of the file(s) searched and the database service, and the date of the search.

The preexamination search must:

5.1 involve U.S. patents and patent application publications, foreign patent documents, and non-patent literature, unless the applicant can justify with reasonable certainty that no references more pertinent than those already identified are likely to be found in the eliminated sources and includes such a justification with this statement;

5.2. be directed to the claimed invention and encompass all of the features of the claims, giving the claims the broadest reasonable expectation;

5.3. encompass the disclosed features that may be claimed.

6. must provide in support of the petition an accelerated examination support document. An accelerated examination support document must include:

6.1. an information disclosure statement (IDS) in compliance with 37 CFR 1.98 citing each reference deemed most closely related to the subject matter of each of the claims;

6.2. an identification of all the limitations in the claims that are disclosed by the reference specifying where the limitation is disclosed in the cited reference;

6.3. a detailed explanation of how each of the claims are patentable over the references cited with particularity required by 37 CFR 1.111(b) and (c);

6.4. a concise statement of the utility of the invention as defined in each of the independent claims (unless the application is a design application);

6.5. a showing of where each limitation of the claims finds support under 35 USC 112, first paragraph, in the written description of the specification. If applicable, the showing must also identify: (1) each means- (or step) plus-function claim element that invokes consideration under 35 UDC 112, sixth paragraph; and (2) the structure, material, or acts in the specification that corresponds to each means- (or step) plus-function claim element that invokes consideration under 35 UDC 112, sixth paragraph; if the application claims the benefit of one or more applications under title 35, United States Code, the showing must also include where each limitation of the claims finds support under 35 USC 112, first paragraph, in each such application in which such supports exists;

6.6. an identification of any cited references that may be disqualified under 35 USC 103(c).

REVIEW OF FACTS

The conditions I.1-4; II.5, 5.1-5.3, 6, 6.1-2, 6.4 and 6.6, above are considered to have been met. However, the petition fails to comply with conditions section II, subsections 6.3 and 6.5, above. Therefore, the petition fails to meet the required conditions to be accorded special status under the accelerated examination procedure.

In order to meet the requirement of section II, subsection 6.3, the examination support document must include a detailed explanation of how each of the claims are patentable over the references cited with particularity required by 37 CFR 1.111(b) and (c). This section of the examination support document does not include the detailed explanation of why the limitations of the claims are patentable over the references either taken along or in combination. It is noted that what appears to be an explanation is provided in the section titled "Identification of Limitations Disclosed by the References". However, this also lacks the necessary detail. For example, the examination support document indicates that "Ortiz, et al. teach the structure of an arrangement for shielding semiconductors from external electromagnetic interference, and a method of utilization thereof." Then further goes on to state "there is no disclosure of providing an adhesive conducting material sealingly between a lid edge and the surface for a substrate in sealing contact with the interior of the shield to form conjointly a Faraday cage forming the shielding." In the paragraph preceding these statements the limitations of the adhesive conducting material, the lid edge and the surface of the substrate are identified as being taught by Ortiz, et al. at (32), (30) and (22) respectively. The patentable distinction between the limitations of the claims and Ortiz, et al. is unclear. For the above reasons, the petition does not meet the requirements of section II, subsection 6.3, as set forth above.

Regarding the requirements of section II, subsection 6.5, the examination support document must include a showing of where **each limitation** of the application claims finds support under 35 USC 112, first paragraph, in the written description of the specification. The examination support document includes a broad statement of the support being found between a range of paragraphs. As such, the examination support document neither clearly shows support for each limitation, nor is it pointed out in the written description of the specification. A more specific description of where each limitation finds support is required. It is suggested that specific paragraph and line numbers be used to identify where each limitation of the claim has support. For these reasons, the petition does not meet the requirements of section II, subsection. 6.5, as set forth above.

DECISION

For the above-stated reasons, the petition is **dismissed**. The application will therefore be taken up by the examiner for action in its regular turn.

Petitioner is given a single opportunity to perfect the petition. Any request for reconsideration of this decision must be submitted within 1 (one) month or 30 (thirty) days, whichever is longer, from the date of this decision in order to be considered timely. Any request for reconsideration must address the deficiencies indicated above.

Petitioner is reminded that, upon granting of the special status of the application on request for reconsideration, the application will be processed expeditiously. However, due to the dismissal of the instant petition, examination may not be completed within twelve months of the filing date of the application.

Any inquiry regarding this decision should be directed to Clayton E. LaBalle, Quality Assurance Specialist (QAS), at (571) 272-1594.

Clayton E. LaBalle, QAS
Technology Center 2800
Semiconductors, Electrical and Optical
Systems and Components

UNITED STATES PATENT AND TRADEMARK OFFICE

UNITED STATES DEPARTMENT OF COMMERCE
United States Patent and Trademark Office
Address: COMMISSIONER FOR PATENTS
P.O. Box 1450
Alexandria, Virginia 22313-1450
www.uspto.gov

APPLICATION NO.	FILING DATE	FIRST NAMED INVENTOR	ATTORNEY DOCKET NO.	CONFIRMATION NO.
12/119,654	05/13/2008	J. Richard Behun	BUR920080024US1 (22181)	3449

45601 7590 10/31/2008
SCULLY, SCOTT, MURPHY & PRESSER, P.C.
400 GARDEN CITY PLAZA
Suite 300
GARDEN CITY, NY 11530

EXAMINER

ART UNIT	PAPER NUMBER
2811	

MAIL DATE	DELIVERY MODE
10/31/2008	PAPER

Please find below and/or attached an Office communication concerning this application or proceeding.

The time period for reply, if any, is set in the attached communication.

UNITED STATES PATENT AND TRADEMARK OFFICE

Commissioner for Patents
United States Patent and Trademark Office
P.O. Box 1450
Alexandria, VA 22313-1450
www.uspto.gov

SCULLY, SCOTT, MURPHY & PRESSER, P.C.
400 GARDEN CITY PLAZA
Suite 300
GARDEN CITY, NY 11530

In re Application of: J. Richard Behun et al. Serial No.: 12/119,654 Filed: May 13, 2008 Attorney Docket No.: BUR920080024US1 Title: ELECTROMAGNETIC INTERFERENCE SHIELD FOR SEMICONDUCTORS USING A CONTINUOUS OR NEAR-CONTINUOUS PERIPHERAL CONDUCTING SEAL AND A CONDUCTING LID	DECISION ON PETITION TO MAKE SPECIAL FOR NEW APPLICATION UNDER 37 C.F.R. § 1.102 & M.P.E.P. § 708.02

This is a decision on the renewed petition filed on October 7, 2008 to make the above-identified application special for accelerated examination procedure under 37 C.F.R. § 1.102(d).

The renewed petition to make the application special is **DENIED**.

A petition to make special was filed in the above-identified application under 37 C.F.R. § 1.102(d) on May 13, 2008. The petition was dismissed in a decision dated September 18, 2008 wherein a non-extendible period of 1 (one) month or 30 (thirty) days, whichever was longer, was set to request reconsideration. The renewed petition was timely filed on October 7, 2008.

The reasons for dismissal were: 1) a failure to provide a detailed explanation of how the claims are patentable over the references cited with the particularity required by 37 C.F.R. §1.111(b) and (c) (condition II.6.3); and 2) a failure to show where ***each claim limitation*** finds support under 35 USC 112, first paragraph, in the written description of the specification (condition II.6.5).

Although an improvement over the previous accelerated examination support document (AESD) filed on May 13, 2008, the revised support document filed on October 7, 2008 fails to correct the deficiencies of the previous accelerated examination support document.

As mentioned in the petition decision of September 18, 2008, item 6.3 of the Conditions Regarding the Petition requires that the support document include a detailed explanation of how each of the claims is patentable over the references cited with the particularity required by 37 C.F.R. §1.111(b) and (c). The revised support document submitted on September 2, 2008 provides a general statement that the cited references fail to teach or suggest the "unique novel

barrier structure, which shields the gap between the lid and laminate substrate with a solid strip of a conductor." However, "a solid strip of a conductor" is not recited in the claim. Rather "a conductive shield" and "an adhesive conductive material sealingly extending between said lid edge and the surface of said substrate in contact with the interior of said shield" are recited in the claim. While it appears that petitioner is using "a solid strip of a conductor" to refer to the "adhesive conductive material" in the claim, it is not clear that such a limitation patentably distinguishes over the prior art. It is noted that in the section entitled "Identification of Limitations Disclosed by the References" there is a statement that in King et al., "there is no disclosure of providing an adhesive conducting material sealingly between a lid edge and the surface for a substrate in sealing contact with the interior of the shield to form conjointly a Faraday cape forming the shielding arrangement to prevent passage of any electromagnetic interference between the substrate and the semiconductor chip or die" on page 6, lines 12-16. However, this statement seemingly contradicts the previous statement that King et al. teach "an adhesive conductive material (12) sealingly extending between said lid edge (11) and the surface of said substrate in contact with the interior of said shield, such that said components conjointly form a Faraday Cage to thereby constitute said shielding arrangement inhibiting the passage of electromagnetic interference between said substrate and said die" on page 5, lines 9-13. Similar statements are made in regard to Arnold et al. and Ortiz et al. Consequently, it is not clear from the AESD whether the prior art discloses the claim limitation of "an adhesive conductive material sealingly extending between said lid edge and the surface of said substrate in contact with the interior of said shield, such that said components conjointly form a Faraday Cage to thereby constitute said shielding arrangement inhibiting the passage of electromagnetic interference between said substrate and said die." Nor is it clear from the AESD how the claimed adhesive conductive material is different from the adhesive conductive material (12) of King et al., the adhesive conductive material (116) of Arnold et al., and the adhesive conductive material (32) of Ortiz et al. The patentable distinction between the limitations of the claims and the prior art is unclear. Consequently, the support document fails to include a detailed explanation of how the claim is patentable over the cited references with the particularity required by 37 C.F.R. §1.111(b) and (c).

As also mentioned in the petition decision of September 18, 2008, item 6.5 of the Conditions Regarding the Petition requires a showing where ***each limitation*** of the application claims finds support under 35 USC 112, first paragraph, in the written description of the specification. While the support document indicates that support for the structural elements of claim 1 is found at least in paragraphs [0019] and [0020] of the specification, the support document fails to mention the steps of claim 2 and show where those steps find support under 35 USC 112, first paragraph, in the written description of the specification. Consequently, the support document fails to show where ***each limitation*** of ***each claim*** finds support under 35 USC 112, first paragraph, in the written description of the specification.

For the above stated reasons, the renewed petition is denied. The application will therefore be taken up the examiner for action in its regular turn.

Petitioner is reminded that a single opportunity to perfect the petition is given. Therefore, further petitions for accelerated examination in this application will not be entertained.

Any inquiry regarding this decision should be directed to the undersigned at (571) 272-1594.

Clayton E. LaBalle, Quality Assurance Specialist
Technology Center 2800
Semiconductors, Electrical and Optical
Systems and Components

CL/JC

UNITED STATES PATENT AND TRADEMARK OFFICE

Commissioner for Patents
United States Patent and Trademark Office
P.O. Box 1450
Alexandria, VA 22313-1450
www.uspto.gov

COPY MAILED

NOV 17 2009

OFFICE OF PETITIONS

J C PATENTS
4 VENTURE, SUITE 250
IRVINE CA 92618

In re Application of	:	
Shuang-Yi Tan et al.	:	
Application No. 12/119,696	:	NOTICE
Filed: May 13, 2008	:	
Attorney Docket No. **JCLA26809**	:	

This is a notice regarding your request filed September 30, 2009, for acceptance of a fee deficiency submission under 37 CFR 1.28.

The Office no longer investigates or rejects original or reissue applications under 37 CFR 1.56. **1098 Off. Gaz. Pat. Office 502 (January 3, 1989)**. Therefore, nothing in this Notice is intended to imply that an investigation was done.

Your fee deficiency submission under 37 CFR 1.28 is hereby **ACCEPTED**.

This application is no longer entitled to small entity status. Accordingly, all future fees paid in this application must be paid at the large entity rate.

Inquiries related to this communication should be directed to the undersigned at (571) 272-4584.

JoAnne Burke
Petitions Examiner
Office of Petitions

UNITED STATES PATENT AND TRADEMARK OFFICE

UNITED STATES DEPARTMENT OF COMMERCE
United States Patent and Trademark Office
Address: COMMISSIONER FOR PATENTS
P.O. Box 1450
Alexandria, Virginia 22313-1450
www.uspto.gov

APPLICATION NO.	FILING DATE	FIRST NAMED INVENTOR	ATTORNEY DOCKET NO.	CONFIRMATION NO.
12/119,726	05/13/2008	Giuseppe Ciano	FR920080070/CB (05456-105	3584

78148 7590 07/23/2008
KING & SPALDING
1180 PEACHTREE ST.
ATLANTA, GA 30309

EXAMINER
CALDWELL, ANDREW T

ART UNIT	PAPER NUMBER
2142	

MAIL DATE	DELIVERY MODE
07/23/2008	PAPER

Please find below and/or attached an Office communication concerning this application or proceeding.

The time period for reply, if any, is set in the attached communication.

UNITED STATES PATENT AND TRADEMARK OFFICE

Commissioner for Patents
United States Patent and Trademark Office
P.O. Box 1450
Alexandria, VA 22313-1450
www.uspto.gov

Ms. Lisa B. Sims
King & Spalding
1180 Peachtree St., N.E.
34th Floor
Atlanta, GA 30309

In re Application of:
Giuseppe CIANO, et al.
Application No. 12/119726
Filed: May 13, 2008
Attorney Docket Number:FR9200800/CB (0546-105)
For: METHOD AND SYSTEM FOR DYNAMIC VIRTUAL ENVIRONMENT MIGRATION

DECISION ON PETITION TO MAKE SPECIAL (ACCELERATED EXAMINATION) UNDER 37 C.F.R. § 1.102(d) and M.P.E.P. §708.02

This is a decision on the Petition To Make Special under 37 C.F.R. § 1.102(d) and M.P.E.P. §708.02(VIII): Accelerated Examination, filed on May 13, 2008.

The petition is **DISMISSED**.

I. M.P.E.P. § 708.02, Section VIII sets forth the prerequisites for a grantable Petition for Accelerated Examination under 37 C.F.R. § 1.102(d) and states in relevant part:

> A new application (one which has not received any examination by the examiner) may be granted special status provided that applicant (and this term includes applicant's attorney or agent) complies with each of the following items:
>
> (a) Submits a petition to make special accompanied by the fee set forth in 37 CFR § 1.17(h);
>
> (b) Presents all claims directed to a single invention, or if the Office determines that all the claims presented are not obviously directed to a single invention, will make an election without traverse as a prerequisite to the grant of special status;
>
> (c) Submits a statement(s) that a pre-examination search was made, listing the field of search by class and subclass, publication, Chemical Abstracts, foreign patents, etc. A search made by a foreign patent office satisfies this requirement;
>
> (d) Submits one copy each of the references deemed most closely related to the subject matter encompassed by the claims if said references are not already of record; and
>
> **(e) Submits a detailed discussion of the references, which discussion points out, with the particularity required by 37 CFR §§ 1.111 (b) and (c), how the claimed subject matter is patentable over the references.**

> In those instances where the request for this special status does not meet all the prerequisites set forth above, applicant will be notified and the defects in the request will be stated. The application will remain in the status of a new application awaiting action in its regular turn. In those instances where a request is defective in one or more respects, applicant will be given one opportunity to perfect the request in a renewed petition to make special. If perfected, the request will then be granted. If not perfected in the first renewed petition, any additional renewed petitions to make special may or may not be considered at the discretion of the Technology Center Special Program Examiner.

The Petition is deficient with respect to M.P.E.P. § 708.02, §§ VIII(e) (as bolded supra).

As set forth in requirement (e), Petitioner must provide a "detailed discussion of the references, which discussion points out, with the particularly requirement by 37 CFR § 1.111(b) and (c), how the claimed subject matter is patentable over the references." 37 CFR § 1.111(b) requires that the discussion of prior art references presents "arguments pointing out the specific distinctions believed to render the claims . . . patentable over any applied references," while 37 CFR § 1.111(c) states that "[a] general allegation that the claims define a patentable invention without specifically pointing out how the language of the claims patentably distinguishes them from the references does not comply with the requirements of this section."

Particularly, in the petition section labeled "9(C). Detailed Explanation of Patentability," Petitioner fails to adequately discuss "specific distinctions" between the prior art and the claimed invention, as set forth in the preceding paragraph. Instead, Petitioner relies on the general allegation that the prior art "fails to disclose, teach, or suggest" the claim limitations. This discussion is deficient in both scope and breadth as each claim limitation must be compared to the each piece of prior art, pointing out both the **similarities** and **differences** between the claimed invention and said prior art.

II. M.P.E.P. § 708.02(a), §§ I sets forth the requirements for granting accelerated examination status under 37 C.F.R. § 1.102(c)(2) and states in relevant part:

> A new application may be granted accelerated examination status under the following conditions:
>
> (H) **At the time of filing, applicant must provide a statement that a preexamination search was conducted, including an identification of the field of search by United States class and subclass and the date of the search, where applicable, and for database searches, the search logic or chemical structure or sequence used as a query, the name of the file or files searched and the database service, and the date of the search.**
>
> (1) This preexamination search must involve U.S. patents and patent application publications, foreign patent documents, and non-patent literature, unless the applicant can justify with reasonable certainty that no references more pertinent than those already identified are likely to be found in the eliminated source and includes such a justification with this statement.
>
> (2) **This preexamination search must be directed to the claimed invention and encompass all of the features of the claims, giving the claims the broadest reasonable interpretation.**
>
> (3) **The preexamination search must also encompass the disclosed features that may be claimed. An amendment to the claims (including any new claim) that is not encompassed by the preexamination search or an**

updated accelerated examination support document (see item I) will be treated as not fully responsive and will not be entered. See subsection IV below for more information.

(4) A search report from a foreign patent office will not satisfy this preexamination search requirement unless the search report satisfies the requirements for a preexamination search.

(5) Any statement in support of a petition to make special must be based on a good faith belief that the preexamination search was conducted in compliance with these requirements. See 37 CFR 1.56 and 10.18.

(I) **At the time of filing, applicant must provide in support of the petition an accelerated examination support document.**

(1) **An accelerated examination support document must include an information disclosure statement (IDS) in compliance with 37 CFR 1.98 citing each reference deemed most closely related to the subject matter of each of the claims.**

(2) For each reference cited, the accelerated examination support document must include an identification of all the limitations in the claims that are disclosed by the reference specifying where the limitation is disclosed in the cited reference.

(3) The accelerated examination support document must include a detailed explanation of how each of the claims are patentable over the references cited with the particularity required by 37 CFR 1.111(b) and (c).

(4) The accelerated examination support document must include a concise statement of the utility of the invention as defined in each of the independent claims (unless the application is a design application).

(5) The accelerated examination support document must include a showing of where each limitation of the claims finds support under the first paragraph of 35 U.S.C. 112 in the written description of the specification. If applicable, the showing must also identify:

(i) each means- (or step-) plus-function claim element that invokes consideration under 35 U.S.C. 112, paragraph 6; and

(ii) the structure, material, or acts in the specification that correspond to each means- (or step-) plus-function claim element that invokes consideration under 35 U.S.C. 112, paragraph 6. If the application claims the benefit of one or more applications under title 35, United States Code, the showing must also include where each limitation of the claims finds support under the first paragraph of 35 U.S.C. 112 in each such application in which such support exists.

(6) The accelerated examination support document must identify any cited references that may be disqualified as prior art under 35 U.S.C. 103(c).

The Petition is deficient with respect to M.P.E.P. § 708.02(a)(I) and § 708.02(a)(H) (as bolded supra).

Regarding the requirement of MPEP § 708.02(a)(H), the text search query reported by the Petitioner fails for its lack of depth and breadth to cover all of the concepts the claims recite. The text search query fails for lack of inclusion of applicable terms, and their synonyms, as used in the claims of the invention. These include, without limitation: **Host, System Resources, Physical System Requirement, Seek, Operator, Assistance, Rule, Reconfiguring, Automatically, Physical Resources, Determining, Removing, Outputting, Instruction, Reading, Addressing,** and **Configuration**.

Additionally, the text search query fails to include several terms which may reveal applicable prior art. For example, the terms **System Platform**, **Virtual World**, **Isolation**, **Instruction Set Architecture**, **Zone**, and **Abstraction**, along with synonyms thereof, should be included in the search string.

Finally, the text search query fails to use many common synonyms which may reveal applicable prior art. For example, Petitioner uses the term . . .

- **Virtual Environment** or **Machine** while failing to include the terms **Hypervisor**, **Sandbox**, **Virtual Server**, or **Emulator**.
- **Migrate$** while failing to include the terms **Move**, **Transfer**, **Shift**, **Copy**, **Relocate**, and **Redirect**.
- **Incompatibl$** while failing to include the term **Contradictory**, **Mismatched**, and **Conflicting**.
- **Inconsist$** while failing to include the term **Conflicting**, **Incompatible**, **Erratic**, and **Unreliable**.

Note that the above listed terms and synonyms are not meant to be an exhaustive list, merely an example of various terms and synonyms that can be used to produce a more comprehensive prior art search. Nor is this objection limited to only those sets of search terms listed; each search term used should be evaluated for applicable synonyms.

Regarding the requirement of MPEP § 708.02(a)(I), the pre-exam search must be directed to the (instant) claimed invention. Based upon the subject matter of this Petition, a search in the following additional class and/or subclasses should be included in order to provide full coverage of where the most pertinent references are most likely to be found:

U.S. Field of Search;
706/60
709/227-29
709/226
714/4
714/7
714/23
714/26

Again, the aforementioned additional classes and/or sub-classes are not meant as an exhaustive list, merely a representative listing of applicable search areas which have not been included in the Petitioner's pre-exam search. It is incumbent on the Petitioner to evaluate all applicable classes and/or sub-classes for pertinent prior art.

Regarding to the requirement of MPEP § 708.02(a)(I.)(I)(5) and item I 5 above, the Accelerated Examination Support Document only identifies paragraphs 6-9 and 24-26 of the instant specification as providing support for the sole claim 1. However, the requirement of MPEP § 708.02(a)(I.)(I)(5) and item II.6.5 above clearly states that the petitioner is required to **specifically identify what corresponding elements in the figures** and **specifically identify**

where the corresponding written description in the cited portions of the instant specification can find support under 35 U.S.C. § 112, first paragraph **for each limitation of the claim 1**. A general statement saying all of the claim features are supported by 26 paragraphs and 3 figures of the specification is not specific. A clarification and identification of support is required.

Because the petition fails to satisfy all of the criteria set forth above, the petition to make special is **DISMISSED**.

Petitioner is given a single opportunity to perfect the petition. Any request for reconsideration of this decision must be submitted within 1 (one) month or 30 (thirty) days, whichever is longer, (no extension of time under 37 CFR 1.136(a)) from the date of this decision in order to be considered timely. Any request for reconsideration must address the deficiencies indicated above.

Petitioner is reminded that, upon granting of the special status of the application on request for reconsideration, the application will be processed expeditiously. However, due to the dismissal of the instant petition, examination may not be completed within twelve months of the filing date of the application.

Until the renewed petition is submitted, the application will be returned to the examiner's docket to await treatment on the merits in the normal order of examination.

A second point of contact is QAS Kim Huynh whose telephone number is (571) 272-4147.

Tod Swann
Technology Center 2100
Computer Architecture, Software, and
Information Security
571-272-3612

UNITED STATES PATENT AND TRADEMARK OFFICE

UNITED STATES DEPARTMENT OF COMMERCE
United States Patent and Trademark Office
Address: COMMISSIONER FOR PATENTS
P.O. Box 1450
Alexandria, Virginia 22313-1450
www.uspto.gov

APPLICATION NO.	FILING DATE	FIRST NAMED INVENTOR	ATTORNEY DOCKET NO.	CONFIRMATION NO.
12/119,726	05/13/2008	Giuseppe Ciano	FR920080070/CB (105095)	3584

78148 7590 09/25/2008
KING & SPALDING
1180 PEACHTREE ST.
ATLANTA, GA 30309

EXAMINER
CALDWELL, ANDREW T

ART UNIT	PAPER NUMBER
2142	

MAIL DATE	DELIVERY MODE
09/25/2008	PAPER

Please find below and/or attached an Office communication concerning this application or proceeding.

The time period for reply, if any, is set in the attached communication.

UNITED STATES PATENT AND TRADEMARK OFFICE

Commissioner for Patents
United States Patent and Trademark Office
P.O. Box 1450
Alexandria, VA 22313-1450
www.uspto.gov

Ms. Lisa B. Sims
King & Spalding
1180 Peachtree St., N.E.
34th Floor
Atlanta, GA 30309

In re Application of:
Giuseppe CIANO, et al.
Application No. 12/119726
Filed: May 13, 2008
Attorney Docket Number:FR9200800/CB (0546-105)
For: METHOD AND SYSTEM FOR DYNAMIC VIRTUAL ENVIRONMENT MIGRATION

DECISION ON PETITION TO MAKE SPECIAL (ACCELERATED EXAMINATION) UNDER 37 C.F.R. § 1.102(d) and M.P.E.P. §708.02

This is a decision on the renewed petition filed on August 22, 2008 to make the above-identified application special for accelerated examination procedure under 37 C.F.R. § 1.102(d). The original petition, submitted on May 13, 2008 was dismissed in the decision mailed on July 23, 2008.

The renew petition to make the application special is **GRANTED** as the new Search Document meets the requirements of MPEP 708.02(a)(H & I) and the new Examination support documents meets the requirements of MPEP 708.02(a)(I)(5) that were deficient in the original petition.

The application is eligible for accelerated examination and the renewed petition complies with the conditions for granting the application special status pursuant to the "Change to Practice for Petitions in Patent Applications to Make Special and for Accelerated Examination" published June 26, 2006, in the Federal Register. (71 Fed. Reg. 36323) as the original identified deficiencies for failing to comply with the requirements for the pre-examination search encompassing all of the features of the claims, and giving the claims the broadest reasonable interpretation, the statement of patentability must provide a detailed explanation of how each of the claims are patentable and the concise statement of the utility must be of the invention as defined in each of the independent claims (reference must be made to independent claims 1, 14 and 20) have been corrected.

The prosecution of the instant application will be conducted expeditiously according to the following guidelines.

1. The application will be docketed to an examiner and taken up for action within two weeks of the date of this decision.

2. Restriction Practice:
If the examiner determines that the claims are not directed to a single invention, a telephone request to elect one single invention will be made pursuant to MPEP 812.01. As a prerequisite to the grant of this petition, the applicant has agreed to make an oral election, by telephone, without traverse. If the applicant refuses to make an election without traverse, or the examiner cannot reach the applicant after a reasonable effort, the examiner will treat the first claimed invention (invention defined by claim 1) as having being constructively elected without traverse for examination.

3. Office action:
If it is determined that, after appropriate consultation, there is a potential rejection or any other issue to be addressed, the examiner will telephone the applicant and arrange an interview to discuss and resolve the issue. An Office action, other than a Notice of Allowance and Fee(s) Due (Notice of Allowance), will not be issued unless either: 1) an interview was conducted but did not result in agreed to action that places the application in condition for allowance, or, 2) a determination is made that an interview would be unlikely to result in the application being placed in condition for allowance, and 3) an internal conference has been held to review any rejection of any claim.

4. Time for Reply:
An Office action other than a Notice of Allowance or a final Office action will set a shortened statutory period of one month or thirty days, whichever is longer, for reply with no extension of time available under 37 CFR 1.136(a). Failure to timely file a reply within this non-extendible period for reply will result in the abandonment of the application.

5. Reply by Applicant:
A timely reply to an Office action other than the Notice of Allowance must be submitted electronically via EFS or EFS-web and limited to addressing the rejections, objections and requirement made. Any amendment that attempts to: 1) add claims which would result in more than three pending independent claims or more than twenty pending total claims; 2) present claims not encompassed by the pre-examination search or an updated accelerated examination support document; or 3) present claims that are directed a non-elected invention or an invention other than that previously claimed and examined in the application, will be treated as not fully responsive and will not be entered.

For any amendment to the claims (including any new claim) that is not encompassed by the accelerated examination support document, applicant must provide an

updated accelerated examination support document that encompasses the amended or new claims at the time of filing of the amendment.

To proceed expeditiously with the examination, it is recommended that a reply with amendments made to any claim or with any new claim being added be accompanied by an updated accelerated examination support document or a statement explaining how the amended or new claim is supported by the original accelerated examination support document.

6. Information Disclosure Statement (IDS):
Any IDS filed during prosecution must be submitted electronically via EFS or EFS-web, accompanied by an updated accelerated examination support document, and be in compliance with 37 CFR 1.97 and 1.98.

7. Post-Allowance Processing:
To expedite processing of the allowed application into a patent, the applicant must: 1) pay the required fees within one month of the date of the Notice of Allowance, and 2) not file any post allowance papers not required by the Office. In no event may the issue fee be paid and accepted later than three months from the date of the Notice of Allowance.

8. After-Final and Appeal Procedures:
To expedite prosecution, after receiving the final Office action, applicant must: 1) promptly file a notice of appeal, an appeal brief and appeal fees; and 2) not request a pre-appeal brief conference.

Any amendment, affidavit or other evidence filed after final Office action must comply with applicable rules and the requirements outlined in numbered paragraphs 5 and 6 above.

On appeal, the application will proceed according to normal appeal procedures. After appeal, the application will again be treated special.

9. Proceedings Outside the Normal Examination Process:
If the application becomes involved in a proceeding that is outside the normal examination process (e.g., a secrecy order, national security review, interference proceeding, petitions under 37 CFR 1.181, 182 or 183), the application will be treated special before and after such proceeding.

10. Final Disposition:
The twelve month goal of this accelerated examination procedure ends with a final disposition. The mailing of a final Office action, a Notice of Allowance, the filing of

a Notice of Appeal, or the filing of a Request for Continued Examination (RCE) is the final disposition.

If, during prosecution, a paper is not filed electronically using EFS-web, a reply is filed but is not fully responsive, the application is involved in an appeal, or a proceeding outside normal examination process, the application will still be examined expeditiously, however, the final disposition may occur more than twelve months from the filing of the application.

Any inquiry regarding this decision should be directed to Tod Swann, Quality Assurance Specialist, at (571) 272-3612. A second point of Contact is Kim Huynh at (571)-272-4147.

Tod R Swann
Quality Assurance Specialist
Technology Center 2100
Computer Security, Architecture and Software

UNITED STATES PATENT AND TRADEMARK OFFICE

UNITED STATES DEPARTMENT OF COMMERCE
United States Patent and Trademark Office
Address: COMMISSIONER FOR PATENTS
P.O. Box 1450
Alexandria, Virginia 22313-1450
www.uspto.gov

APPLICATION NO.	FILING DATE	FIRST NAMED INVENTOR	ATTORNEY DOCKET NO.	CONFIRMATION NO.
12/119,741	05/13/2008	Seiji Munetoh	JP920070066US2	3614

48915 7590 07/01/2008
CANTOR COLBURN LLP-IBM YORKTOWN
20 Church Street
22nd Floor
Hartford, CT 06103

EXAMINER
MOISE, EMMANUEL LIONEL

ART UNIT	PAPER NUMBER
2137	

MAIL DATE	DELIVERY MODE
07/01/2008	PAPER

Please find below and/or attached an Office communication concerning this application or proceeding.

The time period for reply, if any, is set in the attached communication.

UNITED STATES PATENT AND TRADEMARK OFFICE

COMMISSIONER FOR PATENTS
UNITED STATES PATENT AND TRADEMARK OFFICE
WASHINGTON, DC 20231
www.uspto.gov

GREG O'BRADOVICH,
CANTOR COLBURN LLP-IBM YORKTOWN
20 Church Street
22nd Floor
Hartford CT 06103

In re Application of:
Munetoh
Serial No.: 12/119741
Filed: May 13, 2008
Docket: **JP920070066US1**
For: **SYSTEMS, METHODS AND COMPUTER PROGRAM PRODUCTS FOR HIGH AVAILABILITY ENHANCEMENTS OF VIRTUAL SECURITY MODULE SERVERS**

DECISION ON PETITION TO MAKE SPECIAL FOR NEW APPLICATION UNDER 37 C.F.R. § 1.102 & M.P.E.P. § 708.02

This is a decision on the petition filed on ~~April 14~~ MAY 13, 2008 to make the above-identified application special for accelerated examination procedure under 37 C.F.R. § 1.102(d).

The petition to make the application special is **DISMISSED**.

REGULATION AND PRACTICE

A grantable petition to make special under 37 C.F.R. § 1.102(d) and pursuant to the "Change to Practice for Petitions in Patent Applications to Make Special and for Accelerated Examination" published in the Federal Register on June 26, 2006 (71 Fed. Reg. 36323), must satisfy the following conditions:

I. Conditions Regarding the Application:

1. the application must be a non-reissue utility or design application filed under 37 CFR 1.111(a);
2. the application, the petition and the required fees must be filed electronically using the USPTO's electronic filing system (EFS), or EFS-web; if not filed electronically, a statement asserting that EFS and EFS-web were not available during the normal business hours.
3. at the time of filing, the application must be complete under 37 CFR 1.51 and in condition for examination;
4. the application must contain three or fewer independent claims and twenty or fewer total claims and the claims must be directed to a single invention.

II. Conditions Regarding the Petition:

The petition must:

1. be filed with the application;

2. include a statement that applicant agrees not to separately argue the patentability of any independent claim during any appeal in the application;

3. include a statement that applicant agrees to make an election without traverse in a telephone interview.

4. include a statement that applicant agrees to conduct such an interview when requested by the examiner.

5. include a statement, made based on a good faith belief, that a preexamination search in compliance with the following requirements, was conducted, including an identification of the filed of search by United States class and subclass, where applicable, and for database searches, the search logic or chemical structure or sequence used as a query, the name of the file(s) searched and the database service, and the date of the search.

The preexamination search must:

5.1 involve U.S. patents and patent application publications, foreign patent documents, and non-patent literature, unless the applicant can justify with reasonable certainty that no references more pertinent than those already identified are likely to be found in the eliminated sources and includes such a justification with this statement;

5.2. be directed to the claimed invention and encompass all of the features of the claims, giving the claims the broadest reasonable interpretation;

5.3. encompass the disclosed features that may be claimed.

6. must provide in support of the petition an accelerated examination support document. An accelerated examination support document must include:

6.1. an information disclosure statement (IDS) in compliance with 37 CFR 1.98 citing each reference deemed most closely related to the subject matter of each of the claims;

6.2. an identification of all the limitations in the claims that are disclosed by the reference specifying where the limitation is disclosed in the cited reference;

6.3. a detailed explanation of how each of the claims are patentable over the references cited with particularity required by 37 CFR 1.111(b) and (c);

6.4. a concise statement of the utility of the invention as defined in each of the independent claims (unless the application is a design application);

6.5. a showing of where each limitation of the claims finds support under 35 USC 112, first paragraph, in the written description of the specification. If applicable, the showing must also identify: (1) each means- (or step) plus-function claim element that invokes consideration under 35 UDC 112, sixth paragraph; and (2) the structure, material, or acts in the specification that corresponds to each means- (or step) plus-function claim element that invokes consideration under 35 UDC 112, sixth paragraph; if the application claims the benefit of one or more applications under title 35, United States Code, the showing must also include where each limitation of the claims finds support under 35 USC 112, first paragraph, in each such application in which such supports exists;

6.6. an identification of any cited references that may be disqualified under 35 USC 103(c).

REVIEW OF FACTS

The conditions I 1-4, II 1-4 and II 5.1, 5.3, II and 6.1-6.6 above are considered to have been met. However, the petition fails to comply with condition II 5.2 above. Therefore, the petition fails to meet the required conditions to be accorded special status under the accelerated examination procedure.

Regarding the requirement of MPEP § 708.02(a)(I.)(H)[1] and items II.5.2 above, the preexamination search does not encompass all of the features of the claims, and does not appear to have given the claims the broadest reasonable interpretation.

Patent classes 703/23 (emulation) and 717/148 (virtual machines) may yield relevant prior art but were not included in the preexamination search.

The text search strategy fails to include a reasonable number of synonyms for a number of the claim terms and uses terms together in ways that may have excluded relevant prior art. For example, "crypto" is a colloquialism that could be replaced with "crypt$" to more correctly search for prior art in the cryptographic field. In the USPTO search, the term "redund$" is only used in junction with the "master" and "slave" terms. The use of "redund$" independently of "master" and "slave" (as in your Dialog search) is more likely to uncover appropriate prior art. The USPTO, Dialog and Google Scholar searches all use "back up" but omit wildcards to allow for the possibility that prior art used the phrases "backup" or "back-up" and similar alternate uses of this term. The terms "high" and "availability" referenced in your espacenet.com search could have been used in the other searches to find relevant prior art (for example, by searching for terms such as availab?, fault toleran? and similar terms reflective of high reliability).

Petitioner should review all claim limitations, especially those asserted as patentable distinctions from the cited references to ensure that the search covers these concepts, and update the search and/or provide any clarifications if deemed necessary.

DECISION

For the above-stated reasons, the petition is **dismissed**. The application will therefore be taken up by the examiner for action in its regular turn.

Petitioner is given a single opportunity to perfect the petition. Any request for reconsideration of this decision must be submitted within 1 (one) month or 30 (thirty) days, whichever is longer, (no extension of time under 37 CFR 1.136(a)) from the date of this decision in order to be considered timely. Any request for reconsideration must address the deficiencies indicated above.

Petitioner is reminded that, upon granting of the special status of the application on request for reconsideration, the application will be processed expeditiously. However, due to the dismissal of the instant petition, examination may not be completed within twelve months of the filing date of the application.

[1] MPEP 8th ed. rev 5 August 2006

Any inquiry regarding this decision should be directed to Tod Swann, Quality Assurance Specialist, at (571) 272-3612.

Tod R. Swann
Quality Assurance Specialist
Technology Center 2100
Computer Security, Architecture and Software
571-272-3612

UNITED STATES PATENT AND TRADEMARK OFFICE

UNITED STATES DEPARTMENT OF COMMERCE
United States Patent and Trademark Office
Address: COMMISSIONER FOR PATENTS
P.O. Box 1450
Alexandria, Virginia 22313-1450
www.uspto.gov

APPLICATION NO.	FILING DATE	FIRST NAMED INVENTOR	ATTORNEY DOCKET NO.	CONFIRMATION NO.
12/119,741	05/13/2008	Seiji Munetoh	JP920070066US2	3614

48915 7590 09/25/2008
CANTOR COLBURN LLP-IBM YORKTOWN
20 Church Street
22nd Floor
Hartford, CT 06103

EXAMINER
PYZOCHA, MICHAEL J

ART UNIT	PAPER NUMBER
2137	

NOTIFICATION DATE	DELIVERY MODE
09/25/2008	ELECTRONIC

Please find below and/or attached an Office communication concerning this application or proceeding.

The time period for reply, if any, is set in the attached communication.

Notice of the Office communication was sent electronically on above-indicated "Notification Date" to the following e-mail address(es):

usptopatentmail@cantorcolburn.com

UNITED STATES PATENT AND TRADEMARK OFFICE

Commissioner for Patents
United States Patent and Trademark Office
P.O. Box 1450
Alexandria, VA 22313-1450
www.uspto.gov

Greg O'Bradovich
Cantor Colburn LLP-IBM Yorktown
20 Church Street
22nd Floor
Hartford, CT 06103

In re Application of:
Munetoh
Application No. 12/1197[illegible]41
Filed: May 13, 2008
Docket #:JP920070066US1
For: SYSTEM, METHOD, AND COMPUTER PROGRAM PRODUCT FOR HIGH AVAILABILITY ENHANCEMENTS OF VIRTUAL SECURITY MODULE SERVERS

DECISION ON PETITION TO MAKE SPECIAL (ACCELERATED EXAMINATION) UNDER 37 C.F.R. § 1.102(d) and M.P.E.P. §708.02

This is a decision on the renewed petition filed on August 1, 2008 to make the above-identified application special for accelerated examination procedure under 37 C.F.R. § 1.102(d). The original petition, submitted on May 30, 2008 was dismissed in the decision mailed on July 1, 2008.

The renew petition to make the application special is **GRANTED** as the new Search Document meets the requirements of condition II 5.2 and MPEP 708.02(a)(I & H) that were deficient in the original petition.

The application is eligible for accelerated examination and the renewed petition complies with the conditions for granting the application special status pursuant to the "Change to Practice for Petitions in Patent Applications to Make Special and for Accelerated Examination" published June 26, 2006, in the Federal Register. (71 Fed. Reg. 36323) as the original identified deficiencies for failing to comply with the requirements for the pre-examination search encompassing all of the features of the claims, and giving the claims the broadest reasonable interpretation, the statement of patentability must provide a detailed explanation of how each of the claims are patentable and the concise statement of the utility must be of the invention as defined in each of the independent claims (reference must be made to independent claims 1, 14 and 20) have been corrected.

The prosecution of the instant application will be conducted expeditiously according to the following guidelines.

1. The application will be docketed to an examiner and taken up for action within two weeks of the date of this decision.

2. Restriction Practice:
If the examiner determines that the claims are not directed to a single invention, a telephone request to elect one single invention will be made pursuant to MPEP 812.01. As a prerequisite to the grant of this petition, the applicant has agreed to make an oral election, by telephone, without traverse. If the applicant refuses to make an election without traverse, or the examiner cannot reach the applicant after a reasonable effort, the examiner will treat the first claimed invention (invention defined by claim 1) as having being constructively elected without traverse for examination.

3. Office action:
If it is determined that, after appropriate consultation, there is a potential rejection or any other issue to be addressed, the examiner will telephone the applicant and arrange an interview to discuss and resolve the issue. An Office action, other than a Notice of Allowance and Fee(s) Due (Notice of Allowance), will not be issued unless either: 1) an interview was conducted but did not result in agreed to action that places the application in condition for allowance, or, 2) a determination is made that an interview would be unlikely to result in the application being placed in condition for allowance, and 3) an internal conference has been held to review any rejection of any claim.

4. Time for Reply:
An Office action other than a Notice of Allowance or a final Office action will set a shortened statutory period of one month or thirty days, whichever is longer, for reply with no extension of time available under 37 CFR 1.136(a). Failure to timely file a reply within this non-extendible period for reply will result in the abandonment of the application.

5. Reply by Applicant:
A timely reply to an Office action other than the Notice of Allowance must be submitted electronically via EFS or EFS-web and limited to addressing the rejections, objections and requirement made. Any amendment that attempts to: 1) add claims which would result in more than three pending independent claims or more than twenty pending total claims; 2) present claims not encompassed by the pre-examination search or an updated accelerated examination support document; or 3) present claims that are directed a non-elected invention or an invention other than that previously claimed and examined in the application, will be treated as not fully responsive and will not be entered.

For any amendment to the claims (including any new claim) that is not encompassed by the accelerated examination support document, applicant must provide an

updated accelerated examination support document that encompasses the amended or new claims at the time of filing of the amendment.

To proceed expeditiously with the examination, it is recommended that a reply with amendments made to any claim or with any new claim being added be accompanied by an updated accelerated examination support document or a statement explaining how the amended or new claim is supported by the original accelerated examination support document.

6. Information Disclosure Statement (IDS):
Any IDS filed during prosecution must be submitted electronically via EFS or EFS-web, accompanied by an updated accelerated examination support document, and be in compliance with 37 CFR 1.97 and 1.98.

7. Post-Allowance Processing:
To expedite processing of the allowed application into a patent, the applicant must: 1) pay the required fees within one month of the date of the Notice of Allowance, and 2) not file any post allowance papers not required by the Office. In no event may the issue fee be paid and accepted later than three months from the date of the Notice of Allowance.

8. After-Final and Appeal Procedures:
To expedite prosecution, after receiving the final Office action, applicant must: 1) promptly file a notice of appeal, an appeal brief and appeal fees; and 2) not request a pre-appeal brief conference.

Any amendment, affidavit or other evidence filed after final Office action must comply with applicable rules and the requirements outlined in numbered paragraphs 5 and 6 above.

On appeal, the application will proceed according to normal appeal procedures. After appeal, the application will again be treated special.

9. Proceedings Outside the Normal Examination Process:
If the application becomes involved in a proceeding that is outside the normal examination process (e.g., a secrecy order, national security review, interference proceeding, petitions under 37 CFR 1.181, 182 or 183), the application will be treated special before and after such proceeding.

10. Final Disposition:
The twelve month goal of this accelerated examination procedure ends with a final disposition. The mailing of a final Office action, a Notice of Allowance, the filing of

a Notice of Appeal, or the filing of a Request for Continued Examination (RCE) is the final disposition.

If, during prosecution, a paper is not filed electronically using EFS-web, a reply is filed but is not fully responsive, the application is involved in an appeal, or a proceeding outside normal examination process, the application will still be examined expeditiously, however, the final disposition may occur more than twelve months from the filing of the application.

Any inquiry regarding this decision should be directed to Tod Swann, Quality Assurance Specialist, at (571) 272-3612. A second point of Contact is Kim Huynh at (571)-272-4147.

Tod R Swann
Quality Assurance Specialist
Technology Center 2100
Computer Security, Architecture and Software

UNITED STATES PATENT AND TRADEMARK OFFICE

UNITED STATES DEPARTMENT OF COMMERCE
United States Patent and Trademark Office
Address: COMMISSIONER FOR PATENTS
P.O. Box 1450
Alexandria, Virginia 22313-1450
www.uspto.gov

PHILIPS INTELLECTUAL PROPERTY & STANDARDS
P.O. BOX 3001
BRIARCLIFF MANOR, NY 10510

Mail Date: 04/21/2010

Applicant	: Claude Barozzini	: DECISION ON REQUEST FOR
Patent Number	: 7594737	: RECALCULATION of PATENT
Issue Date	: 09/29/2009	: TERM ADJUSTMENT IN VIEW
Appliction No	: 12/119,757	: OF WYETH AND NOTICE OF INTENT TO
Filed	: 05/13/2008	: ISSUE CERTIFICATE OF CORRECTION
		:

The Request for Recalculation is **GRANTED** to the extent indicated.

The patent term adjustment has been determined to be **0** days. The USPTO will *sua sponte* issue a certificate of correction reflecting the amount of PTA days determined by the recalculation.

Prior to the issuance of the certificate of correction, the USPTO will afford patentee an opportunity to be heard and request reconsideration. Accordingly, patentee has **one month or thirty (30) days**, whichever is longer, to file a request for reconsideration of this patent term adjustment calculation. See 35 U.S.C. 154(b)(3)(B)(ii) and 37 CFR 1.322(a)(4). No extensions of time will be granted under 37 CFR 1.136.

Patentee should use document code PET.OP if electronically filing a request for reconsideration of this patent term adjustment calculation. The patentee must also include the information required by 37 CFR 1.705(b)(2) and the fee required by 37 CFR 1.18(e). If patentee does not file a timely request for reconsideration of this patent term adjustment calculation including the information required by 37 CFR 1.705(b)(2) and the fee required by 37 CFR 1.18(e), the USPTO will issue a certificate of correction reflecting the PTA determination noted above.

Patentee should be aware that in order to preserve the right to review in the United States District Court for the District of Columbia of the USPTO patent term adjustment determination, patentee must ensure that he or she also take the steps required under 35 U.S.C. 154(b)(4)(A) in a timely manner. Nothing in the request for recalculation should be construed as providing an alternative time frame for commencing a civil action under 35 U.S.C. 154(b)(4)(A).

Any questions concerning this decision should be directed to the Office of Patent Legal Administration at 571-272-7702.

UNITED STATES PATENT AND TRADEMARK OFFICE

Commissioner for Patents
United States Patent and Trademark Office
P.O. Box 1450
Alexandria, VA 22313-1450
www.uspto.gov

CHRISTOPHER & WEISBERG, P.A.
200 EAST LAS OLAS BOULEVARD
SUITE 2040
FORT LAUDERDALE FL 33301

MAILED

JUN 11 2009

OFFICE OF PETITIONS

In re Application of	:	
Edgar A. Otto	:	DECISION ON PETITION
Application No. 12/119,779	:	TO WITHDRAW
Filed: May 13, 2008	:	FROM RECORD
Attorney Docket No. 1394-9U	:	

This is a decision on the request to withdraw as attorney of record under 37 C.F.R. § 1.36, filed April 24, 2009.

The request is **NOT APPROVED**.

The Office will only accept correspondence address changes to the most current address information provided for the assignee of the entire interest *who properly became of record under 37 CFR 3.71,* or, if no assignee of the entire interest has properly been made of record, the most current address information provided for the first named inventor. 37 CFR 3.71(c) states:

> *An assignee becomes of record either in a national patent application or a reexamination proceeding by filing a statement in compliance with § 3.73(b) that is signed by a party who is authorized to act on behalf of the assignee.*

As there is currently no Statement under 37 CFR 3.73(b) currently of record in the instant application, the Office cannot change the correspondence address to the address on the Request to Withdraw.

All future communications from the Office will continue to be directed to the above-listed address until otherwise notified by applicant.

Currently, there is no outstanding Office action that requires a reply.

Telephone inquires concerning this decision should be directed to Petitions Examiner Joan Olszewski at (571) 272-7751. All other inquires concerning either the examination or status of the application should be directed to the Technology Center.

/Liana Walsh/
Liana Walsh
Petitions Examiner
Office of Petitions

UNITED STATES PATENT AND TRADEMARK OFFICE

UNITED STATES DEPARTMENT OF COMMERCE
United States Patent and Trademark Office
Address: COMMISSIONER FOR PATENTS
P.O. Box 1450
Alexandria, Virginia 22313-1450
www.uspto.gov

APPLICATION NO.	FILING DATE	FIRST NAMED INVENTOR	ATTORNEY DOCKET NO.	CONFIRMATION NO.
12/119,787	05/13/2008	Takashi OKAZAKI	KAS-6392	3714

7590 05/06/2010
MATTINGLY & MALUR, P.C.
1800 DIAGONAL ROAD
SUITE 370
ALEXANDRIA, VA 22314

EXAMINER
NGUYEN, KIET TUAN

ART UNIT	PAPER NUMBER
2881	

MAIL DATE	DELIVERY MODE
05/06/2010	PAPER

DECISION DISMISSING PETITION UNDER 37 CFR 1.138(d)

The declaration of express abandonment will not be recognized

This is in response to the petition under 37 CFR 1.138(d), requesting for a refund of any previously paid search fee and excess claims fee in the above-identified application.

The petition is dismissed.

The express abandonment will **not** be recognized for the reason(s) indicated below:

1. ☑ The petition was not filed in sufficient time to permit the appropriate officials to recognize the abandonment before an examination has been made of the application. See 37 CFR 1.138(d).
2. ☐ The petition was not signed by a party authorized by 37 CFR 1.33(b)(1), (3) or (4).
3. ☐ The application is not an application filed under 35 U.S.C. 111(a) on or after December 8, 2004.
4. ☐ The petition for express abandonment under 1.138(d) is dismissed because the applicant did not pay any search fee and excess claims fees in the above-identified application.

Telephone inquiries should be directed to the Office of Data Management at (571) 272-4200.

Tom Farmer

Patent Publication Branch
Office of Data Management

FORM PET651D (Rev. 08/07)

UNITED STATES PATENT AND TRADEMARK OFFICE

UNITED STATES DEPARTMENT OF COMMERCE
United States Patent and Trademark Office
Address: COMMISSIONER FOR PATENTS
P.O. Box 1450
Alexandria, Virginia 22313-1450
www.uspto.gov

APPLICATION NO.	FILING DATE	FIRST NAMED INVENTOR	ATTORNEY DOCKET NO.	CONFIRMATION NO.
12/119,789	05/13/2008	Lucas W. Partridge	GB920080041US1	3717

78571 7590 02/23/2009
Dillon & Yudell LLP
8911 N. Capital of Texas Hwy
Suite 2110
Austin, TX 78759

EXAMINER
BULLOCK JR, LEWIS ALEXANDER

ART UNIT	PAPER NUMBER
2193	

MAIL DATE	DELIVERY MODE
02/23/2009	PAPER

Please find below and/or attached an Office communication concerning this application or proceeding.

The time period for reply, if any, is set in the attached communication.

UNITED STATES PATENT AND TRADEMARK OFFICE

Commissioner for Patents
United States Patent and Trademark Office
P.O. Box 1450
Alexandria, VA 22313-1450
www.uspto.gov

February 22, 2009

JONATHAN E. JOBE
DILLON & YUDELL LLP
8911 N. CAPITAL OF TEXAS HWY
SUITE 2110
AUSTIN TX 78759

In re Application of: Partridge, Lucas W.
Serial No: 12/119,789
Filed: May 13, 2008
Docket: GB920080041US1
Title: Method of Delivering Software Over a Network

DECISION ON PETITION TO MAKE SPECIAL FOR NEW APPLICATION UNDER 37 C.F.R. § 1.102 & M.P.E.P. § 708.02

This is a decision on the petition filed on May 13, 2008 to make the above-identified application special for accelerated examination procedure under 37 C.F.R. § 1.102(d).

The petition to make the application special is **GRANTED**.

The application is eligible for accelerated examination and the petition complies with the conditions for granting the application special status pursuant to the "Change to Practice for Petitions in Patent Applications to Make Special and for Accelerated Examination" published June 26, 2006, in the Federal Register. (71 Fed. Reg. 36323).

The prosecution of the instant application will be conducted expeditiously according to the following guidelines.

1. The application will be docketed to an examiner and taken up for action within two weeks of the date of this decision.

2. Restriction Practice:
   If the examiner determines that the claims are not directed to a single invention, a telephone request to elect one single invention will be made pursuant to MPEP 812.01. As a prerequisite to the grant of this petition, the applicant has agreed to make an oral election, by telephone, without traverse. If the applicant refuses to make an election without traverse, or the examiner cannot reach the applicant after a reasonable effort, the examiner will treat the first claimed invention (invention defined by claim 1) as having being constructively elected without traverse for examination.

3. Office action:
   If it is determined that, after appropriate consultation, there is a potential rejection or any other issue to be addressed, the examiner will telephone the applicant and arrange an interview to discuss and resolve the issue. An Office action, other than a Notice of Allowance and Fee(s) Due (Notice of Allowance), will not be issued unless either: 1) an interview was conducted but did not result in agreed to action that places the application in condition for allowance, or, 2) a determination is made that an interview would be unlikely to result in the application being placed in condition for allowance, and 3) an internal conference has been held to review any rejection of any claim.

4. Time for Reply:
   An Office action other than a Notice of Allowance or a final Office action will set a shortened statutory period of one month or thirty days, whichever is longer, for reply with no extension of time available under 37 CFR 1.136(a). Failure to timely file a reply within this non-extendible period for reply will result in the abandonment of the application.

5. Reply by Applicant:
   A timely reply to an Office action other than the Notice of Allowance must be submitted electronically via EFS or EFS-web and limited to addressing the rejections, objections and requirement made. Any amendment that attempts to: 1) add claims which would result in more than three pending independent claims or more than twenty pending total claims; 2) present claims not encompassed by the pre-examination search or an updated accelerated examination support document; or 3) present claims that are directed a non-elected invention or an invention other than that previously claimed and examined in the application, will be treated as not fully responsive and will not be entered.

   For any amendment to the claims (including any new claim) that is not encompassed by the accelerated examination support document, applicant must provide an updated accelerated examination support document that encompasses the amended or new claims at the time of filing of the amendment.

   To proceed expeditiously with the examination, it is recommended that a reply with amendments made to any claim or with any new claim being added be accompanied by an updated accelerated examination support document or a statement explaining how the amended or new claim is supported by the original accelerated examination support document.

6. Information Disclosure Statement (IDS):
   Any IDS filed during prosecution must be submitted electronically via EFS or EFS-web, accompanied by an updated accelerated examination support document, and be in compliance with 37 CFR 1.97 and 1.98.

7. Post-Allowance Processing:
   To expedite processing of the allowed application into a patent, the applicant must: 1) pay the required fees within one month of the date of the Notice of Allowance, and 2) not file any post allowance papers not required by the Office. In no event may the issue fee be paid and accepted later than three months from the date of the Notice of Allowance.

8. After-Final and Appeal Procedures:
   To expedite prosecution, after receiving the final Office action, applicant must: 1) promptly file a notice of appeal, an appeal brief and appeal fees; and 2) not request a pre-appeal brief conference.

   Any amendment, affidavit or other evidence filed after final Office action must comply with applicable rules and the requirements outlined in numbered paragraphs 5 and 6 above.

   On appeal, the application will proceed according to normal appeal procedures. After appeal, the application will again be treated special.

9. Proceedings Outside the Normal Examination Process:
   If the application becomes involved in a proceeding that is outside the normal examination process (e.g., a secrecy order, national security review, interference proceeding, petitions under 37 CFR 1.181, 182 or 183), the application will be treated special before and after such proceeding.

10. Final Disposition:
    The twelve month goal of this accelerated examination procedure ends with a final disposition. The mailing of a final Office action, a Notice of Allowance, the filing of a Notice of Appeal, or the filing of a Request for Continued Examination (RCE) is the final disposition.

If, during prosecution, a paper is not filed electronically using EFS-web, a reply is filed but is not fully responsive, the application is involved in an appeal, or a proceeding outside normal examination process, the application will still be examined expeditiously, however, the final disposition may occur more than twelve months from the filing of the application.

Any inquiry regarding this decision should be directed to Gail Hayes, Quality Assurance Specialist, (571) 272-3591.

___/Gail Hayes/_____
Gail Hayes, Quality Assurance Specialist
Technology Center 2100

RLE

UNITED STATES PATENT AND TRADEMARK OFFICE

Commissioner for Patents
United States Patent and Trademark Office
P.O. Box 1450
Alexandria, VA 22313-1450
www.uspto.gov

McDERMOTT WILL & EMERY, LLP
600 13th Street, N.W.
Washington, DC 20005-3096

JUL 2 3 2008

In re Application of	: DECISION ON REQUEST TO
Ichiro MATSUHISA	: PARTICIPATE IN PATENT
Application No. 12/119827	: PROSECUTION HIGHWAY
Filed: April 30, 2008	: PILOT PROGRAM AND PETITION
Attorney Docket No. 043888-0669	: TO MAKE SPECIAL UNDER
	: 37 CFR 1.102(d)

This is a decision on the request to participate in the Patent Prosecution Highway (PPH) program and the petition under 37 CFR 1.102(d), filed July 17, 2008, to make the above-identified application special.

The request and petition are **GRANTED**.

A grantable request to participate in the PPH pilot program and petition to make special require:

(1) The U.S. application must validly claim priority under 35 U.S.C. 119(a) to one or more applications filed in the JPO, note where the JPO application with similar claims is not the same application from which the U.S. application claims priority that the applicant must identify the relationship between the JPO application with similar claims and the JPO priority application;
(2) Applicant must submit a copy of:
- a. The allowable/patentable claim(s) from the JPO application(s) or if a copy of the allowable/patentable claims is available via the Dossier Access System (DAS) applicant may request the USPTO to obtain a copy from DAS; however, if the USPTO is unable to obtain a copy from the DAS, the applicant will be required to submit a copy;
- b. An English translation of the allowable/patentable claim(s), if applicable; and
- c. A statement that the English translation is accurate, if applicable;

(3) Applicant must:
- a. Ensure all the claims in the U.S. application must sufficiently correspond or be amended to sufficiently correspond to the allowable/patentable claim(s) in the JPO application(s); and
- b. Submit a claims correspondence table in English

(4) Examination of the U.S. application has not begun;
(5) Applicant must submit:
- a. Documentation of prior office action:
  - i. a copy of the office action(s) just prior to the "Decision to Grant a Patent" from each of the JPO application(s) containing the allowable/patentable claims(s)

or

ii. if the allowable/patentable claims(s) are from "Notification of Reasons for Refusal" then the Notification of Reasons for Refusal or

iii. if the JPO application is a first action allowance then no office action from the JPO is necessary should be indicated on the request/petition form;

Further, if a copy of the documents from a or b above is available via the Dossier Access System (DAS), applicant may request the USPTO obtain a copy from the SAD; however, if the USPTO is unable to obtain a copy of the DAS, the applicant will be required to submit a copy;

b. An English language translation of the JPO Office action from (5) (a)(i)-(ii) above, if applicable; and

c. A statement that the English translation is accurate;

(6) Applicant must submit:

a. An IDS listing the documents cited by the JPO examiner in the JPO office action (unless already submitted in this application)

b. Copies of documents except U.S. patents or U.S. patent application publications (unless already submitted in this application); and

(7) The required petition fee under 37 CFR 1.17(h).

The request to participate in the PPH pilot program and petition comply with the above requirements. Accordingly, the above-identified application has been accorded "special" status.

Telephone inquiries concerning this decision should be directed to Kathryn Gorgos at 571 272-1012.

All other inquiries concerning the examination or status of the application is accessible in the PAIR system at http://www.uspto.gov/ebc/index.html.

The application is being forwarded to the examiner for action on the merits commensurate with this decision.

Kathryn Gorgos
TQAS TC 1700

UNITED STATES PATENT AND TRADEMARK OFFICE

Commissioner for Patents
United States Patent and Trademark Office
P.O. Box 1450
Alexandria, VA 22313-1450
www.uspto.gov

MCDERMOTT WILL & EMERY LLP
600 13TH STREET, NW
WASHINGTON, DC 20005-3096

MAILED

FEB 20 2009

OFFICE OF PETITIONS

ON PETITION

In re Application of
Ichiro Matsuhisa et al
Application No. 12/119,827
Filed: May 13, 2008
Attorney Docket No. 043888-0669

This is a decision on the petition, filed February 19, 2009 which is being treated as a petition under 37 CFR 1.313(c)(2) to withdraw the above-identified application from issue after payment of the issue fee.

The petition is **GRANTED**.

The above-identified application is withdrawn from issue for consideration of a submission under 37 CFR 1.114 (request for continued examination). See 37 CFR 1.313(c)(2).

Petitioner is advised that the issue fee paid on January 21, 2009 in the above-identified application cannot be refunded. If, however, the above-identified application is again allowed, petitioner may request that it be applied towards the issue fee required by the new Notice of Allowance.[1]

Telephone inquiries should be directed to Irvin Dingle at (571) 272-3210.

This matter is being referred to Technology Center AU 1795 for processing of the request for continued examination under 37 CFR 1.114 and for consideration of the concurrently filed Information Disclosure Statement.

/Irvin Dingle/
Irvin Dingle
Petitions Examiner
Office of Petitions

---

[1] The request to apply the issue fee to the new Notice may be satisfied by completing and returning the new Issue Fee Transmittal Form PTOL-85(b), which includes the following language thereon: Commissioner for Patents is requested to apply the Issue Fee and Publication Fee (if any) or re-apply any previously paid issue fee to the application identified above. Petitioner is advised that, whether a fee is indicated as being due or not, the Issue Fee Transmittal Form **must** be completed and timely submitted to avoid abandonment. Note the language in bold text on the first page of the Notice of Allowance and Fee(s) Due (PTOL-85).

UNITED STATES PATENT AND TRADEMARK OFFICE

Commissioner for Patents
United States Patent and Trademark Office
P.O. Box 1450
Alexandria, VA 22313-1450
www.uspto.gov

IP GROUP OF DLA PIPER US LLP
ONE LIBERTY PLACE
1650 MARKET ST, SUITE 4900
PHILADELPHIA PA 19103

COPY MAILED

SEP 2 3 2008

OFFICE OF PETITIONS

In re Application of	:	
Kao, Zeng and Das	:	DECISION ACCORDING STATUS
Application No. 12/119,841	:	UNDER 37 CFR 1.47(a)
Filed: 05/13/2008	:	
Attorney Docket No. END-06-1156R	:	
Title: OPIOID AND METHODS OF	:	
MAKING AND USING THE SAME	:	

This is in response to the petition under 37 CFR 1.47(a), filed July 16, 2008.

The petition under 37 CFR 1.47(a) is **granted**.

Petitioners showed that the non-signing inventor refused to join in the filing of the above-identified application after having been presented with the application papers. Specifically, petitioners established that they mailed a copy of the application papers and declaration to the last known address of the non-signing inventor; however, the non-signing inventor did not respond to the requests to sign the declaration.

The Office has reviewed the above-identified application and papers and has found them in compliance with 37 CFR 1.47(a). This application is hereby accorded Rule 1.47(a) status. As provided in Rule 1.47(c), this Office will forward notice of this application's filing to the non-signing inventor at the address given in the present petition. Notice of the filing of this application will also be published in the Official Gazette.

Petitioner paid a $130.00 fee for filing the present petition; however, the current fee is $200.00. The Office will charge the balance due of $70.00 to the Deposit Account.

The matter is being referred to the Office of Patent Application Processing.

Telephone inquiries regarding this decision should be directed to the undersigned at (571) 272-3211.

Christina T. Donnell

Christina Tartera Donnell
Senior Petitions Attorney
Office of Petitions

UNITED STATES PATENT AND TRADEMARK OFFICE

Commissioner for Patents
United States Patent and Trademark Office
P.O. Box 1450
Alexandria, VA 22313-1450
www.uspto.gov

Huai-Hung Danny Kao
137 Colony Lane
Syosset NY 11791

COPY MAILED

SEP 23 2008

OFFICE OF PETITIONS

In re Application of :
Kao, Zeng and Das :
Application No. 12/119,841 : LETTER
Filed: 05/13/2008 :
Attorney Docket No. END-06-1156R :
Title: OPIOID AND METHODS OF MAKING :
AND USING THE SAME :

Dear Dr. Kao:

You are named as a joint inventor in the above-identified United States patent application, filed under the provisions of 35 U.S.C. 116 (United States Code), and 37 CFR 1.47(a), Rules of Practice in Patent Cases. Should a patent be granted on the application you will be designated therein as a joint inventor.

As a named inventor you are entitled to inspect any paper in the file wrapper of the application, order copies of all or any part thereof (at a prepaid cost per 37 CFR 1.19) or make your position of record in the application. Alternatively, you may arrange to do any of the preceding through a registered patent attorney or agent presenting written authorization from you. If you care to join the application, counsel of record (see below) would presumably assist you. Joining the application would entail the filing of an appropriate oath or declaration by you pursuant to 37 CFR 1.63.

Requests for information regarding your application should be directed to the File Information Unit at (703) 308-2733. Information regarding how to pay for and order a copy of the application, or a specific paper in the application should be directed to the Certification Division at (571) 272-3150 or (800) 972-6382 (outside the Washington, DC area).

Christina T. Donnell

Christina Tartera Donnell
Senior Petitions Attorney
Office of Petitions

IP GROUP OF DLA PIPER US LLP
ONE LIBERTY PLACE
1650 MARKET ST, SUITE 4900
PHILADELPHIA PA 19103

UNITED STATES PATENT AND TRADEMARK OFFICE

Commissioner for Patents
United States Patent and Trademark Office
P.O. Box 1450
Alexandria, VA 22313-1450
www.uspto.gov

Foley & Lardner, LLP
111 Huntington Avenue
26th Floor
Boston, MA 02199-7610

MAILED

JUN 22 2009

OFFICE OF PETITIONS

In re Application of	:	
Fedor V. Karpushko	:	
Application No. 12/119,853	:	DECISION ON PETITION
Filed: May 13, 2008	:	TO WITHDRAW
Attorney Docket No. 090434-0103	:	FROM RECORD
	:	

This is a decision on the Request to Withdraw as attorney or agent of record under 37 C.F.R. § 1.36(b), filed April 22, 2009.

The request is **moot because a revocation of power of attorney has been filed**.

A review of the file record indicates that the power of attorney to Joseph M. Maraia and all attorneys/agents associated with customer number 48329 has been revoked by the assignee of the patent application on June 12, 2009. Accordingly, the request to withdraw under 37 C.F.R. § 1.36(b) is moot.

All future communications from the Office will continue to be directed to the below-listed address until otherwise notified by applicant.

Telephone inquires concerning this decision should be directed to Kimberly Inabinet at 571-272-4618.

Kimberly Inabinet
Petitions Examiner
Office of Petitions

cc: Senniger Powers, LLP
100 North Broadway
17th Floor
St. Louis, MO 63102

UNITED STATES PATENT AND TRADEMARK OFFICE

UNITED STATES DEPARTMENT OF COMMERCE
United States Patent and Trademark Office
Address: COMMISSIONER FOR PATENTS
P.O. Box 1450
Alexandria, Virginia 22313-1450
www.uspto.gov

APPLICATION NO.	FILING DATE	FIRST NAMED INVENTOR	ATTORNEY DOCKET NO.	CONFIRMATION NO.
12/119,863	05/13/2008	John U. Knickerbocker	YOR920070731US1	3850

76301 7590 06/18/2008
Leander F. Aulisio
320 23rd Street S. #705
Arlington, VA 22202

EXAMINER

ART UNIT	PAPER NUMBER
2812	

MAIL DATE	DELIVERY MODE
06/18/2008	PAPER

Please find below and/or attached an Office communication concerning this application or proceeding.

The time period for reply, if any, is set in the attached communication.

UNITED STATES PATENT AND TRADEMARK OFFICE

Commissioner for Patents
United States Patent and Trademark Office
P.O. Box 1450
Alexandria, VA 22313-1450
www.uspto.gov

062008

Leander F. Aulisio
320 23rd Street S. #705
Arlington, VA 22202

In re Application of:
John U. Knickerbocker
Serial No.: 12/119,863
Filed: May 13, 2008
Docket Number: YOR920070731US1
Title: CONDUCTIVE ADHESIVE FOR THINNED SILICON WAFERS WITH THROUGH SILICON VIAS

DECISION ON PETITION TO MAKE SPECIAL FOR NEW APPLICATION UNDER 37 C.F.R. § 1.102

This is a decision on the petition filed on May 13, 2008, to make the above-identified application special for accelerated examination procedure in accordance with 37 C.F.R. § 1.102(c)(2).

The petition to make the application special is GRANTED.

The application is eligible for accelerated examination and the petition complies with the conditions for granting the application special status pursuant to M.P.E.P. §708.02(a) and to the "Change to Practice for Petitions in Patent Applications to Make Special and for Accelerated Examination" published June 26, 2006, in the Federal Register. (71 Fed. Reg. 36323).

This application was filed without a drawing. Pursuant to M.P.E.P. §601.01(f), it is presumed a drawing is not necessary for the understanding of the invention under 35 USC 113, first sentence, as set forth in the sole process claim. However, the granting of the special status does not prejudice the examiner from determining that a drawing is in fact necessary to understand the invention under 35 USC 113, first sentence, during prosecution.

The prosecution of the instant application will be conducted expeditiously according to the following guidelines.

1. The application will be docketed to an examiner and taken up for action within two weeks of the date of this decision.

2. Restriction Practice:
   If the examiner determines that the claims are not directed to a single invention, a telephone request to elect one single invention will be made pursuant to M.P.E.P. §812.01. As a prerequisite to the grant of this petition, the applicant has agreed to make an oral election, by telephone, without traverse. If the applicant refuses to make an

election without traverse, or the examiner cannot reach the applicant after a reasonable effort, the examiner will treat the first claimed invention (invention defined by claim 1) as having being constructively elected without traverse for examination.

3. Office action:
If it is determined that, after appropriate consultation, there is a potential rejection or any other issue to be addressed, the examiner will telephone the applicant and arrange an interview to discuss and resolve the issue. An Office action, other than a Notice of Allowance and Fee(s) Due (Notice of Allowance), will not be issued unless either: 1) an interview was conducted but did not result in agreed to action that places the application in condition for allowance, or, 2) a determination is made that an interview would be unlikely to result in the application being placed in condition for allowance, and 3) an internal conference has been held to review any rejection of any claim.

4. Time for Reply:
An Office action other than a Notice of Allowance or a final Office action will set a shortened statutory period of one month or thirty days, whichever is longer, for reply with no extension of time available under 37 C.F.R. §1.136(a). Failure to timely file a reply within this non-extendible period for reply will result in the abandonment of the application.

5. Reply by Applicant:
A timely reply to an Office action other than the Notice of Allowance must be submitted electronically via EFS or EFS-web and limited to addressing the rejections, objections and requirement made. Any amendment that attempts to: 1) add claims which would result in more than three pending independent claims or more than twenty pending total claims; 2) present claims not encompassed by the pre-examination search or an updated accelerated examination support document; or 3) present claims that are directed a non-elected invention or an invention other than that previously claimed and examined in the application, will be treated as not fully responsive and will not be entered.

For any amendment to the claims (including any new claim) that is not encompassed by the accelerated examination support document, applicant must provide an updated accelerated examination support document that encompasses the amended or new claims at the time of filing of the amendment.

To proceed expeditiously with the examination, it is recommended that a reply with amendments made to any claim or with any new claim being added be accompanied by an updated accelerated examination support document or a statement explaining how the amended or new claim is supported by the original accelerated examination support document.

6. Information Disclosure Statement (IDS):
Any IDS filed during prosecution must be submitted electronically via EFS or EFS-web, accompanied by an updated accelerated examination support document, and be in compliance with 37 C.F.R. §1.97 and §1.98.

7. Post-Allowance Processing:
   To expedite processing of the allowed application into a patent, the applicant must: 1) pay the required fees within one month of the date of the Notice of Allowance, and 2) not file any post allowance papers not required by the Office. In no event may the issue fee be paid and accepted later than three months from the date of the Notice of Allowance.

8. After-Final and Appeal Procedures:
   To expedite prosecution, after receiving the final Office action, applicant must: 1) promptly file a notice of appeal, an appeal brief and appeal fees; and 2) not request a pre-appeal brief conference.

   Any amendment, affidavit or other evidence filed after final Office action must comply with applicable rules and the requirements outlined in numbered paragraphs 5 and 6 above.

   On appeal, the application will proceed according to normal appeal procedures. After appeal, the application will again be treated special.

9. Proceedings Outside the Normal Examination Process:
   If the application becomes involved in a proceeding that is outside the normal examination process (e.g., a secrecy order, national security review, interference proceeding, petitions under 37 C.F.R. §1.181, §1.182 or §1.183), the application will be treated special before and after such proceeding.

10. Final Disposition:
    The twelve-month goal of this accelerated examination procedure ends with a final disposition. The mailing of a final Office action, a Notice of Allowance, the filing of a Notice of Appeal, or the filing of a Request for Continued Examination (RCE) is the final disposition. However, the application retains its special status after the filing of an RCE.

If, during prosecution, a paper is not filed electronically using EFS-web, a reply is filed but is not fully responsive, the application is involved in an appeal or a proceeding outside normal examination process, the application will still be examined expeditiously, however, the final disposition may occur more than twelve months from the filing of the application.

Any inquiry regarding this decision should be directed to the undersigned at (571) 272-1606.

Henry Phan

Hien H. Phan, Quality Assurance Specialist
Technology Center 2800 - Semiconductors,
Electrical & Optical Systems & Components

UNITED STATES PATENT AND TRADEMARK OFFICE

UNITED STATES DEPARTMENT OF COMMERCE
United States Patent and Trademark Office
Address: COMMISSIONER FOR PATENTS
P.O. Box 1450
Alexandria, Virginia 22313-1450
www.uspto.gov

APPLICATION NO.	FILING DATE	FIRST NAMED INVENTOR	ATTORNEY DOCKET NO.	CONFIRMATION NO.
12/119,887	05/13/2008	Yukifumi YAMADA	326245US26	3899

7590 08/10/2009
OBLON, SPIVAK, MCCLELLAND MAIER & NEUSTADT, P.C.
1940 DUKE STREET
ALEXANDRIA, VA 22314

EXAMINER
BLANKENSHIP, GREGORY A

ART UNIT	PAPER NUMBER
3612	

NOTIFICATION DATE	DELIVERY MODE
08/10/2009	ELECTRONIC

DECISION GRANTING PETITION UNDER 37 CFR 1.138(d)

The declaration of express abandonment is recognized

This is in response to the petition under 37 CFR 1.138(d), requesting for a refund of any previously paid search fee and excess claims fee in the above-identified application.

The petition is granted.

The express abandonment is recognized. Any previously paid search fee and excess claims fee are hereby refunded.

Telephone inquiries should be directed to the Office of Data Management at (571) 272-4200.

Betty Powell

Patent Publication Branch
Office of Data Management

Adjustment date: 06/07/2009 BPOWELL
05/14/2008 INTERSH 00001770 12119887
02 FC:1111 -510.00 OP
04 FC:1202 -100.00 OP

Adjustment date: 06/07/2009 BPOWELL
05/14/2008 INTERSH 00001770 12119887
02 FC:1111 -510.00 OP
04 FC:1202 -100.00 OP

FORM PET651G (Rev. 08/07)

Refund Ref:
08/07/2009 0030073120

Credit Card Refund Total: $610.00

Ac Exp..: XXXXXXXXXXX1007

UNITED STATES PATENT AND TRADEMARK OFFICE

Commissioner for Patents
United States Patent and Trademark Office
P.O. Box 1450
Alexandria, VA 22313-1450
www.uspto.gov

AT & T LEGAL DEPARTMENT – BHGL
ATTN: PATENT DOCKETING ROOM 2A-207
ONE AT&T WAY
BEDMINSTER NJ 07921

COPY MAILED

DEC 17 2009

OFFICE OF PETITIONS

In re Application of	:	
James T. MACIEJEWSKI, et al	:	
Application No. 12/119,906	:	DECISION ON PETITION
Filed: May 13, 2008	:	TO WITHDRAW
Attorney Docket No. 8285/968	:	FROM RECORD
	:	

This is a decision on the Request to Withdraw as attorney or agent under 37 C.F.R. § 1.36(b) filed October 5, 2009.

The request is **NOT APPROVED**.

The Office will no longer accept address changes to a new practitioner or law firm filed with a Request, absent the filing of a power of attorney to the new representative. The Office will either change the correspondence address of record to the most current address information provided for the assignee of the entire interest who properly became of record under 37 CFR 3.71 or, if no assignee of the entire interest has properly been made of record under 37 CFR 3.71, the most current address information provided for the first named inventor.

Accordingly, the request to withdraw from record cannot be approved because the correspondence address provided for future communications from the Office is not that of either an assignee of the entire interest who has properly been made of record under 37 CFR 3.71 or the most current address for the first named inventor.

Further, the request cannot be approved because the attorneys of record were not appointed by designation a Customer Number indicated on the request.

All future communications from the Office will continue to be directed to the above-identified address until otherwise properly notified.

Telephone inquires concerning this decision should be directed to the undersigned at 571-272-6735.

/Diane Goodwyn/
Diane Goodwyn
Petitions Examiner
Office of Petitions

cc: SCOTT W. BRIM
BRINKS HOFER GILSON & LIONE
P.O. BOX 10395
CHICAGO IL 60610

UNITED STATES PATENT AND TRADEMARK OFFICE

UNITED STATES DEPARTMENT OF COMMERCE
United States Patent and Trademark Office
Address: COMMISSIONER FOR PATENTS
P.O. Box 1450
Alexandria, Virginia 22313-1450
www.uspto.gov

APPLICATION NO.	FILING DATE	FIRST NAMED INVENTOR	ATTORNEY DOCKET NO.	CONFIRMATION NO.
12/119,911	05/13/2008	Juan Jose Legarda Ibanez	55979-354905 (0451)	3942

23370 7590 06/05/2008
JOHN S. PRATT, ESQ
KILPATRICK STOCKTON, LLP
1100 PEACHTREE STREET
ATLANTA, GA 30309

EXAMINER

ART UNIT	PAPER NUMBER
1614	

MAIL DATE	DELIVERY MODE
06/05/2008	PAPER

Please find below and/or attached an Office communication concerning this application or proceeding.

The time period for reply, if any, is set in the attached communication.

UNITED STATES PATENT AND TRADEMARK OFFICE

Commissioner for Patents
United States Patent and Trademark Office
P.O. Box 1450
Alexandria, VA 22313-1450
www.uspto.gov

John S. Pratt. Esq
KilPatrick Stockton, LLP
1100 Peachtree Street
Atlanta, GA 30309

JUN 0 5 2008

In re Application of	:
Ibanez et al.	: DECISION ON PETITION TO MAKE
Serial No.: 12/119,911	: SPECIAL FOR NEW APPLICATION
Filed: May 13, 2008	: UNDER 37 C.F.R. § 1.102 & M.P.E.P.
Attorney Docket No.: 55979-354905 (0451)	: § 708.02

This is a decision on the petition filed May 13, 2008, to make the above-identified application special for accelerated examination procedure under 37 C.F.R. § 1.102(d).

The petition to make the application special is **DISMISSED**.

REGULATION AND PRACTICE

A grantable petition to make special under 37 C.F.R. § 1.102(d) and pursuant to the "Change to Practice for Petitions in Patent Applications to Make Special and for Accelerated Examination" published in the Federal Register on June 26, 2006 (71 Fed. Reg. 36323), must satisfy the following conditions:

I. Conditions Regarding the Application:

1. the application must be a non-reissue utility or design application filed under 37 CFR 1.111(a);
2. the application, the petition and the required fees must be filed electronically using the USPTO's electronic filing system (EFS), or EFS-web; if not filed electronically, a statement asserting that EFS and EFS-web were not available during the normal business hours.
3. at the time of filing, the application must be complete under 37 CFR 1.51 and in condition for examination;
4. the application must contain three or fewer independent claims and twenty or fewer total claims and the claims must be directed to a single invention.

II. Conditions Regarding the Petition:

The petition must:

1. be filed with the application;

2. include a statement that applicant agrees not to separately argue the patentability of any dependent claim during any appeal in the application;

3. include a statement that applicant agrees to make an election without traverse in a telephone interview.

4. include a statement that applicant agrees to conduct such an interview when requested by the examiner.

5. include a statement, made based on a good faith belief, that a preexamination search in compliance with the following requirements, was conducted, including an identification of the field of search by United States class and subclass, where applicable, and for database searches, the search logic or chemical structure or sequence used as a query, the name of the file(s) searched and the database service, and the date of the search.

The preexamination search must:

5.1 involve U.S. patents and patent application publications, foreign patent documents, and non-patent literature, unless the applicant can justify with reasonable certainty that no references more pertinent than those already identified are likely to be found in the eliminated sources and includes such a justification with this statement;

5.2. be directed to the claimed invention and encompass all of the features of the claims, giving the claims the broadest reasonable expectation;

5.3. encompass the disclosed features that may be claimed.

6. must provide in support of the petition an accelerated examination support document. An accelerated examination support document must include:

6.1. an information disclosure statement (IDS) in compliance with 37 CFR 1.98 citing each reference deemed most closely related to the subject matter of each of the claims;

6.2. an identification of all the limitations in the claims that are disclosed by the reference specifying where the limitation is disclosed in the cited reference;

6.3. a detailed explanation of how each of the claims is patentable over the references cited with particularity required by 37 CFR 1.111(b) and (c);

6.4. a concise statement of the utility of the invention as defined in each of the independent claims (unless the application is a design application);

6.5. a showing of where each limitation of the claims finds support under 35 U.S.C. 112, first paragraph, in the written description of the specification. If applicable, the showing must also identify: (1) each means- (or step) plus-function claim element that invokes consideration under 35 U.S.C. 112, sixth paragraph; and (2) the structure, material, or acts in the specification that corresponds to each means- (or step) plus-function claim element that invokes consideration under 35 U.S.C. 112, sixth paragraph; if the application claims the benefit of one or more applications under title 35, United States Code, the showing must also include where each limitation of the claims finds support under 35 U.S.C. 112, first paragraph, in each such application in which such supports exists;

6.6. an identification of any cited references that may be disqualified under 35 U.S.C. 103(c).

REVIEW OF FACTS

The conditions I.1- II.4 above are considered to have been met. However, the petition fails to comply with conditions II.5-6 above. Therefore, the petition fails to meet the required conditions to be accorded special status under the accelerated examination procedure.

Regarding the requirements of MPEP § 708.02, 5 and 6, applicant has provided the Pre-Examination Search Document which appears deficient in the search query. The Pre-examination Search document appears deficient in that the search appears to have been done was not conducted with a broadest reasonable interpretation of the claimed features – individual terms were neither construed with a broadest reasonable interpretation for searched terms, nor searched sufficiently and adequately to encompass the disclosed features that may be claimed, which raises questions as to the validity of the search.

For example, the limitation of "chloride channel modulator" was not given the broadest reasonable interpretation for search terms used in the Pre-Examination Search Document. The limitation can be reasonably construed to embrace small molecular weight drugs, peptide drugs, protein drugs, therapeutic compounds, particularly since claim 1 does not indicate *per se* as to what exactly the structure of the "selective chloride channel modulator".
In addition, none of the active limitations as recited in claim 9, has been searched, especially all of the limitations pertain to only to just a generic recitation of "partial agonist of the $GABA_A$ receptor sites. The same can be said for the limitations as recited in claim 4-20. Note that the pre-examination search document must encompass all of the features of the claims, giving the claims the broadest reasonable expectation, and must encompass the disclosed features that may be claimed.

In addition, the examination support document does not provide a detailed explanation of how the claims are patentable over the claims of the pending application serial number 11/111,435, which is the parent case over this instant case.
In view of the above deficiencies the search and the Pre-examination Support Document and IDS form, and the Examination Support Document are defective or incomplete and need to be revised or updated.

DECISION

For the above-stated reasons, the petition is **DISMISSED**. The application will therefore be taken up by the examiner for action in its regular turn.

Petitioner is given a single opportunity to perfect the petition. Any request for reconsideration of this decision must be submitted within 1 (one) month or 30 (thirty) days, whichever is longer, from the date of this decision in order to be considered timely. Any request for reconsideration must address the deficiencies indicated above.

Petitioner is reminded that, upon granting of the special status of the application on request for reconsideration, the application will be processed expeditiously. However, due to the dismissal

of the instant petition, examination may not be completed within twelve months of the filing date of the application.

Any inquiry regarding this decision should be directed to Dave Nguyen, TQAS TC 1600, at (571) 272-0731.

Dave T Nguyen
TC Quality Assurance Specialist
Technology Center 1600

UNITED STATES PATENT AND TRADEMARK OFFICE

UNITED STATES DEPARTMENT OF COMMERCE
United States Patent and Trademark Office
Address: COMMISSIONER FOR PATENTS
P.O. Box 1450
Alexandria, Virginia 22313-1450
www.uspto.gov

APPLICATION NO.	FILING DATE	FIRST NAMED INVENTOR	ATTORNEY DOCKET NO.	CONFIRMATION NO.
12/119,911	05/13/2008	Juan Jose Legarda Ibanez	55979-354905 (0451)	3942

23370 7590 08/06/2008
JOHN S. PRATT, ESQ
KILPATRICK STOCKTON, LLP
1100 PEACHTREE STREET
ATLANTA, GA 30309

EXAMINER
THOMAS, TIMOTHY P

ART UNIT	PAPER NUMBER
1614	

MAIL DATE	DELIVERY MODE
08/06/2008	PAPER

Please find below and/or attached an Office communication concerning this application or proceeding.

The time period for reply, if any, is set in the attached communication.

UNITED STATES PATENT AND TRADEMARK OFFICE

Commissioner for Patents
United States Patent and Trademark Office
P.O. Box 1450
Alexandria, VA 22313-1450
www.uspto.gov

Customer No. 23370

AUG 0 6 2008

JOHN S. PRATT, ESQ
1100 PEACHTREE STREET

ATLANTA, GA 30309

In re Application of: IBANEZ
Serial No.: 12/119,911
Filed: May 13, 2008
Docket No.: 55979-354905 (0451)
Title: Use of Selective Chloride Channel Modulators To Treat Methamphetamine Abuse

DECISION ON PETITION TO MAKE SPECIAL FOR NEW APPLICATION UNDER 37 C.F.R § 1.102 & M.P.E.P. § 708.02

This is a decision on the **renewed petition** filed on July 3, 2008 to make the above-identified application special for accelerated examination procedure under 37 C.F.R. § 1.102(d).

The petition to make the application special is **GRANTED**.

The application is eligible for accelerated examination and the petition complies with the conditions for granting the application special status pursuant to the "Change to Practice for Petitions in Patent Applications to Make Special and for Accelerated Examination" published June 26, 2006, in the Federal Register. (71 Fed. Reg. 36323).

The prosecution of the instant application will be conducted expeditiously according to the following guidelines.

1. The application will be docketed to an examiner and taken up for action within two weeks of the date of this decision.

2. Restriction Practice:
   If the examiner determines that the claims are not directed to a single invention, a telephone request to elect one single invention will be made pursuant to MPEP 812.01. As a prerequisite to the grant of this petition, the applicant has agreed to make an oral election, by telephone, without traverse. If the applicant refuses to make an election without traverse, or the examiner cannot reach the applicant after a reasonable effort, the

examiner will treat the first claimed invention (invention defined by claim 1) as having being constructively elected without traverse for examination.

3. Office action:
   If it is determined that, after appropriate consultation, there is a potential rejection or any other issue to be addressed, the examiner will telephone the applicant and arrange an interview to discuss and resolve the issue. An Office action, other than a Notice of Allowance and Fee(s) Due (Notice of Allowance), will not be issued unless either: 1) an interview was conducted but did not result in agreed to action that places the application in condition for allowance, or, 2) a determination is made that an interview would be unlikely to result in the application being placed in condition for allowance, and 3) an internal conference has been held to review any rejection of any claim.

4. Time for Reply:
   An Office action other than a Notice of Allowance or a final Office action will set a shortened statutory period of one month or thirty days, whichever is longer, for reply with no extension of time available under 37 CFR 1.136(a). Failure to timely file a reply within this non-extendible period for reply will result in the abandonment of the application.

5. Reply by Applicant:
   A timely reply to an Office action other than the Notice of Allowance must be submitted electronically via EFS or EFS-web and limited to addressing the rejections, objections and requirement made. Any amendment that attempts to: 1) add claims which would result in more than three pending independent claims or more than twenty pending total claims; 2) present claims not encompassed by the pre-examination search or an updated accelerated examination support document; or 3) present claims that are directed a non-elected invention or an invention other than that previously claimed and examined in the application, will be treated as not fully responsive and will not be entered.

   For any amendment to the claims (including any new claim) that is not encompassed by the accelerated examination support document, applicant must provide an updated accelerated examination support document that encompasses the amended or new claims at the time of filing of the amendment.

   To proceed expeditiously with the examination, it is recommended that a reply with amendments made to any claim or with any new claim being added be accompanied by an updated accelerated examination support document or a statement explaining how the amended or new claim is supported by the original accelerated examination support document.

6. Information Disclosure Statement (IDS):
   Any IDS filed during prosecution must be submitted electronically via EFS or EFS-web, accompanied by an updated accelerated examination support document, and be in compliance with 37 CFR 1.97 and 1.98.

7. Post-Allowance Processing:
   To expedite processing of the allowed application into a patent, the applicant must: 1) pay the required fees within one month of the date of the Notice of Allowance, and 2) not file any post allowance papers not required by the Office. In no event may the issue fee be paid and accepted later than three months from the date of the Notice of Allowance.

8. After-Final and Appeal Procedures:
   To expedite prosecution, after receiving the final Office action, applicant must: 1) promptly file a notice of appeal, an appeal brief and appeal fees; and 2) not request a pre-appeal brief conference.

   Any amendment, affidavit or other evidence filed after final Office action must comply with applicable rules and the requirements outlined in numbered paragraphs 5 and 6 above.

   On appeal, the application will proceed according to normal appeal procedures. After appeal, the application will again be treated special.

9. Proceedings Outside the Normal Examination Process:
   If the application becomes involved in a proceeding that is outside the normal examination process (e.g., a secrecy order, national security review, interference proceeding, petitions under 37 CFR 1.181, 182 or 183), the application will be treated special before and after such proceeding.

10. Final Disposition:
    The twelve month goal of this accelerated examination procedure ends with a final disposition. The mailing of a final Office action, a Notice of Allowance, the filing of a Notice of Appeal, or the filing of a Request for Continued Examination (RCE) is the final disposition.

If, during prosecution, a paper is not filed electronically using EFS-web, a reply is filed but is not fully responsive, the application is involved in an appeal, or a proceeding outside normal examination process, the application will still be examined expeditiously, however, the final disposition may occur more than twelve months from the filing of the application.

Any inquiry regarding this decision should be directed to Dave Nguyen, Quality Assurance Specialist, at (571) 272-0731.

Dave Nguyen, Quality Assurance Specialist
Technology Center 1600

UNITED STATES PATENT AND TRADEMARK OFFICE

Commissioner for Patents
United States Patent and Trademark Office
P.O. Box 1450
Alexandria, VA 22313-1450
www.uspto.gov

WARD AND SMITH, P.A.
1001 COLLEGE COURT
P.O. BOX 867
NEW BERN, NC 28563-0867

MAILED

FEB 23 2009

OFFICE OF PETITIONS

In re Application of	:	
BUTTER, Adrian S. et al.	:	
Application No. 12/119,924	:	DECISION ON PETITION
Filed: May 13, 2008	:	TO WITHDRAW
Attorney Docket No. **ROC920080004US1 (IBM 22)**	:	FROM RECORD

This is a decision on the Request to Withdraw as attorney or agent of record under 37 C.F.R. § 1.36(b), filed January 23, 2009.

The request is **NOT APPROVED** as moot.

A review of the file record indicates that the power of attorney to WARD AND SMITH, P.A. has been changed on February 13, 2009. Accordingly, the request to withdraw under 37 C.F.R. § 1.36(b) is moot.

All future communications from the Office will continue to be directed to the below-listed address until otherwise notified by applicant.

Telephone inquires concerning this decision should be directed to Tredelle Jackson at 571-272-2783.

Tredelle D. Jackson
Paralegal Specialist
Office of Petitions

cc: **ADRIAN S. BUTTER**
7 MEADOWOOD LANE
BINGHAMTON NY 13901

UNITED STATES PATENT AND TRADEMARK OFFICE

UNITED STATES DEPARTMENT OF COMMERCE
United States Patent and Trademark Office
Address: COMMISSIONER FOR PATENTS
P.O. Box 1450
Alexandria, Virginia 22313-1450
www.uspto.gov

APPLICATION NO.	FILING DATE	FIRST NAMED INVENTOR	ATTORNEY DOCKET NO.	CONFIRMATION NO.
12/119,965	05/13/2008	Maki Hamaguchi	323205US3DIV	4034

7590 01/29/2010
OBLON, SPIVAK, MCCLELLAND MAIER & NEUSTADT, L.L.P.
1940 DUKE STREET
ALEXANDRIA, VA 22314

EXAMINER

ART UNIT	PAPER NUMBER
3754	

NOTIFICATION DATE	DELIVERY MODE
01/29/2010	ELECTRONIC

DECISION GRANTING PETITION UNDER 37 CFR 1.138(d)

The declaration of express abandonment is recognized

This is in response to the petition under 37 CFR 1.138(d), requesting for a refund of any previously paid search fee and excess claims fee in the above-identified application.

The petition is granted.

The express abandonment is recognized. Any previously paid search fee and excess claims fee are hereby refunded.

Telephone inquiries should be directed to the Office of Data Management at (571) 272-4200.

Nina Farmer

Patent Publication Branch
Office of Data Management

[illegible] 0002[illegible]

Credit Card Refund Totals $[illegible]

[illegible]

Adjustment Date: 01/29/2010 NFARMER
05/14/2008 INTEFSW 00002377 12119965
02 FC:1111 -510.00 OP

FORM PET651G (Rev. 08/07)

UNITED STATES PATENT AND TRADEMARK OFFICE

Commissioner for Patents
United States Patent and Trademark Office
P.O. Box 1450
Alexandria, VA 22313-1450
www.uspto.gov

ADE & COMPANY INC.
2157 Henderson Highway
WINNIPEG MB R2G1P-9
CANADA

COPY MAILED
DEC 3 1 2008

In re Application of	:	
Scrymgeour et al.	:	
Application No. 12/120,007	:	Decision According Status
Filed: May 13, 2008	:	Under 37 CFR 1.47(a)
Attorney Docket No. 82910-3132 ADB	:	
For: Lottery Ticket With Play Action Game	:	

This is a decision on the petition under 37 CFR 1.47(a) filed July 28, 2008.

The petition is **granted**.

The above-identified application and papers have been reviewed and found in compliance with 37 CFR 1.47(a). This application is hereby accorded Rule 1.47(a) status.

As provided in Rule 1.47(c), this Office will forward notice of this application's filing to the non-signing inventor at the address given in the petition. Notice of the filing of this application will also be published in the Official Gazette.

The fee required for a petition under 37 CFR 1.47 is $200. Petitioner submitted $130 upon filing the petition. Therefore, an additional $70 has been charged to petitioner's deposit account.

Technology Center Art Unit 3711 will be informed the declaration has been accepted without the signature of Inventor McCallum and the application is now in condition for examination in due course.

Telephone inquiries regarding this communication should be directed to Petitions Attorney Steven Brantley at (571) 272-3203.

Charles Steven Brantley
Senior Petitions Attorney
Office of Petitions

UNITED STATES PATENT AND TRADEMARK OFFICE

Commissioner for Patents
United States Patent and Trademark Office
P.O. Box 1450
Alexandria, VA 22313-1450
www.uspto.gov

MAIL

JUL 17 2008

DIRECTOR'S OFFICE
TECHNOLOGY CENTER 2600

FISH & ASSOCIATES, PC
ROBERT D. FISH
2603 Main Street
Suite 1050
Irvine CA 92614-6232

In re Application of:
WITTENSCHLAEGER, THOMAS
Serial No.: 12/120,024
Filed: May 13, 2008

Title: **DISAGGREGATED NETWORK MANAGEMENT**

DECISION ON PETITION TO MAKE SPECIAL FOR NEW APPLICATION UNDER 37 C.F.R. § 1.102 & M.P.E.P. § 708.02

This is a decision on the petition filed on May 13, 2008 requesting reconsideration to make the above-identified application special for accelerated examination procedure under 37 C.F.R. § 1.102(d).

All of the requirements to correct the deficiencies outlined in the petition decision mailed November 21, 2007 have been met.

The petition to make the application special is **GRANTED**.

The application is eligible for accelerated examination and the petition complies with the conditions for granting the application special status pursuant to the "Change to Practice for Petitions in Patent Applications to Make Special and for Accelerated Examination" published June 26, 2006, in the Federal Register. (71 Fed. Reg. 36323).

The prosecution of the instant application will be conducted expeditiously according to the following guidelines.

1. The application will be docketed to an examiner and taken up for action within two weeks of the date of this decision.

2. Restriction Practice:

If the examiner determines that the claims are not directed to a single invention, a telephone request to elect one single invention will be made pursuant to MPEP 812.01. As a prerequisite to the grant of this petition, the applicant has agreed to make an oral election, by telephone, without traverse. If the applicant refuses to make an election without traverse, or the examiner cannot reach the applicant after a reasonable effort, the examiner will treat the first claimed invention (invention defined by claim 1) as having being constructively elected without traverse for examination.

3. Office action:
If it is determined that, after appropriate consultation, there is a potential rejection or any other issue to be addressed, the examiner will telephone the applicant and arrange an interview to discuss and resolve the issue. An Office action, other than a Notice of Allowance and Fee(s) Due (Notice of Allowance), will not be issued unless either: 1) an interview was conducted but did not result in agreed to action that places the application in condition for allowance, or, 2) a determination is made that an interview would be unlikely to result in the application being placed in condition for allowance, and 3) an internal conference has been held to review any rejection of any claim.

4. Time for Reply:
An Office action other than a Notice of Allowance or a final Office action will set a shortened statutory period of one month or thirty days, whichever is longer, for reply with no extension of time available under 37 CFR 1.136(a). Failure to timely file a reply within this non-extendible period for reply will result in the abandonment of the application.

5. Reply by Applicant:
A timely reply to an Office action other than the Notice of Allowance must be submitted electronically via EFS or EFS-web and limited to addressing the rejections, objections and requirement made. Any amendment that attempts to: 1) add claims which would result in more than three pending independent claims or more than twenty pending total claims; 2) present claims not encompassed by the pre-examination search or an updated accelerated examination support document; or 3) present claims that are directed a non-elected invention or an invention other than that previously claimed and examined in the application, will be treated as not fully responsive and will not be entered.

For any amendment to the claims (including any new claim) that is not encompassed by the accelerated examination support document, applicant must provide an updated accelerated examination support document that encompasses the amended or new claims at the time of filing of the amendment.

To proceed expeditiously with the examination, it is recommended that a reply with amendments made to any claim or with any new claim being added be accompanied by an updated accelerated examination support document or a statement explaining how the amended or new claim is supported by the original accelerated examination support document.

6. Information Disclosure Statement (IDS):
   Any IDS filed during prosecution must be submitted electronically via EFS or EFS-web, accompanied by an updated accelerated examination support document, and be in compliance with 37 CFR 1.97 and 1.98.

7. Post-Allowance Processing:
   To expedite processing of the allowed application into a patent, the applicant must: 1) pay the required fees within one month of the date of the Notice of Allowance, and 2) not file any post allowance papers not required by the Office. In no event may the issue fee be paid and accepted later than three months from the date of the Notice of Allowance.

8. After-Final and Appeal Procedures:
   To expedite prosecution, after receiving the final Office action, applicant must: 1) promptly file a notice of appeal, an appeal brief and appeal fees; and 2) not request a pre-appeal brief conference.

   Any amendment, affidavit or other evidence filed after final Office action must comply with applicable rules and the requirements outlined in numbered paragraphs 5 and 6 above.

   On appeal, the application will proceed according to normal appeal procedures. After appeal, the application will again be treated special.

9. Proceedings Outside the Normal Examination Process:
   If the application becomes involved in a proceeding that is outside the normal examination process (e.g., a secrecy order, national security review, interference proceeding, petitions under 37 CFR 1.181, 182 or 183), the application will be treated special before and after such proceeding.

10. Final Disposition:
    The twelve month goal of this accelerated examination procedure ends with a final disposition. The mailing of a final Office action, a Notice of Allowance, the filing of a Notice of Appeal, or the filing of a Request for Continued Examination (RCE) is the final disposition.

If, during prosecution, a paper is not filed electronically using EFS-web, a reply is filed but is not fully responsive, the application is involved in an appeal, or a proceeding outside normal examination process, the application will still be examined expeditiously, however, the final disposition may occur more than twelve months from the filing of the application.

Any inquiry regarding this decision should be directed to Ken Wieder, Quality Assurance Specialist, at (571) 272-2986.

Kenneth A. Wieder
Quality Assurance Specialist
Technology Center 2600
Communications

UNITED STATES PATENT AND TRADEMARK OFFICE

Commissioner for Patents
United States Patent and Trademark Office
P.O. Box 1450
Alexandria, VA 22313-1450
www.uspto.gov

REED SMITH, LLP
10 SOUTH WACKER DRIVE
CHICAGO IL 60606-7507

MAILED

JUN 11 2009

OFFICE OF PETITIONS

In re Application of	:	
William E. Dutton, Jr.	:	DECISION ON PETITION
Application No. 12/120,049	:	TO WITHDRAW
Filed: May 13, 2008	:	FROM RECORD
Attorney Docket No. 325242.00002	:	

This is a decision on the request to withdraw as attorney of record under 37 C.F.R. § 1.36, filed April 30, 2009.

The request is **NOT APPROVED**.

The Office will only accept correspondence address changes to the most current address information provided for the assignee of the entire interest *who properly became of record under 37 CFR 3.71,* or, if no assignee of the entire interest has properly been made of record, the most current address information provided for the first named inventor. 37 CFR 3.71(c) states:

> *An assignee becomes of record either in a national patent application or a reexamination proceeding by filing a statement in compliance with § 3.73(b) that is signed by a party who is authorized to act on behalf of the assignee.*

According to a review of current USPTO records, petitioner did not supply the new correspondence address of either a properly recorded assignee concerning the above-identified application or the first listed inventor. The Office will also no longer change the correspondence address to that of a new practitioner unless the Request is accompanied by a power of attorney to a new practitioner (e.g., Form PTO/SB/82). This includes address changes to law firms, where no new power of attorney has been filed in the application. As such, all future communications from the Office will continue to be directed to the above-listed address until otherwise notified by applicant.

Currently, this application has been docketed and is ready for examination.

Telephone inquires concerning this decision should be directed to Joan Olszewski at 571-272-7751.

/Liana Walsh/
Liana Walsh
Petitions Examiner
Office of Petitions

UNITED STATES PATENT AND TRADEMARK OFFICE

Commissioner for Patents
United States Patent and Trademark Office
P.O. Box 1450
Alexandria, VA 22313-1450
www.uspto.gov

REED SMITH, LLP
10 SOUTH WACKER DRIVE
CHICAGO IL 60606-7507

COPY MAILED

JUL 2 0 2009

OFFICE OF PETITIONS

In re Application of	:	
William E. Dutton, Jr.	:	DECISION ON PETITION
Application No. 12/120,049	:	TO WITHDRAW
Filed: May 13, 2008	:	FROM RECORD
Attorney Docket No. 325242.00002	:	

This is a decision on the renewed Request to Withdraw as attorney or agent of record under 37 C.F.R. § 1.36(b), filed June 22, 2009.

The request is **APPROVED**.

A grantable request to withdraw as attorney/agent of record must be signed by every attorney/agent seeking to withdraw or contain a clear indication that one attorney is signing on behalf of another/others. The Office will require the practitioner(s) to certify that he, she or they have: (1) given reasonable notice to the client, prior to the expiration of the reply period, which the practitioner(s) intends to withdraw from employment; (2) delivered to the client or a duly authorized representative of the client all papers and property (including funds) to which the client is entitled; and (3) notified the client of any replies that may be due and the time frame within which the client must respond, pursuant to 37 CFR 10.40 (c).

The request was signed by Michael M. Geoffrey on behalf of all attorneys of record who are associated with Customer No. 35614.

All attorneys/agents associated with Customer Number 35614 have been withdrawn. Applicant is reminded that there is no attorney of record at this time.

All future correspondence will be directed to the first named inventor at the address indicated below.

Currently, there is no outstanding Office action that requires a reply.

Telephone inquires concerning this decision should be directed to Petitions Examiner Joan Olszewski at (571) 272-7751. All other inquires concerning either the examination or status of the application should be directed to the Technology Center.

/Liana Walsh/
Liana Walsh
Petitions Examiner
Office of Petitions

cc: William E. Dutton, Jr.
9153 Charrington Drive
Frankfort IL 60423

UNITED STATES PATENT AND TRADEMARK OFFICE

Commissioner for Patents
United States Patent and Trademark Office
P.O. Box 1450
Alexandria, VA 22313-1450
www.uspto.gov

DUANE MORRIS LLP - NY
PATENT DEPARTMENT
1540 BROADWAY
NEW YORK NY 10036-4086

COPY MAILED

FEB 17 2009

OFFICE OF PETITIONS

In re Application of
Mallon, et al.
Application No.: 12/120,062
Filed: May 13, 2008
Attorney Docket No.: Y3222-00002

ON PETITION

This is a decision on the petition under 37 CFR 1.47(a), filed November 28, 2008.

The petition is **DISMISSED**.

Any request for reconsideration of this decision must be submitted within TWO (2) MONTHS from the mail date of this decision. Extensions of time under 37 CFR 1.136(a) are permitted. Any response should be entitled "Request for Reconsideration of Petition Under 37 CFR 1.47(a)" and may include an oath or declaration executed by the inventor. **Failure to respond will result in abandonment of the application.**

A grantable petition under 37 CFR 1.47(a) requires:

(1) a petition including proof of the pertinent facts establishing that the joint inventor(s) refuses to join, or cannot be found or reached after diligent effort,
(2) a proper oath or Declaration executed by the available joint inventor(s),
(3) the petition fee of $200, and
(4) the last known address of the omitted inventor(s).

This petition lacks item (1) above.

As to item (1), petitioner has failed to establish that Mr. Mallon refused to join in the filing of the above-identified application.

The Office requires that the non-signing inventor be provided with a complete copy of the application as filed. This includes the specification with claims, drawings, if any, and a declaration. See MPEP 409.03(d). The statement of facts does not establish that a complete copy of the application was presented to Mr. Mallon. The statement of facts, paragraph (3) states, "...The letter described the filed application as filed and requested his signature on an additional enclosed declaration."

Mr. Mallon must have the complete application in his possession in order to make an informed decision as to whether he joins in its filing. When petitioner can show that Mr. Mallon was mailed or received the complete application and that he either refused to sign the declaration or would not respond to the request that he sign the declaration within a reasonable amount of time, petitioner will have satisfied this requirement.

Pursuant to petitioner's authorization, deposit account no. 04-1679 will be charged the required $200.00 Rule 47 petition fee.

Further correspondence with respect to this matter should be addressed as follows:

By mail: Mail Stop PETITION
Commissioner for Patents
Post Office Box 1450
Alexandria, VA 22313-1450

By hand: U.S. Patent and Trademark Office
Customer Service Window, Mail Stop Petition
Randolph Building
401 Dulany Street
Alexandria, VA 22314

By FAX: (571) 273-8300 - ATTN: Office of Petitions

Telephone inquiries should be directed to the undersigned at (571) 272-3230.

Shirene Willis Brantley
Senior Petitions Attorney
Office of Petitions

UNITED STATES PATENT AND TRADEMARK OFFICE

Commissioner for Patents
United States Patent and Trademark Office
P.O. Box 1450
Alexandria, VA 22313-1450
www.uspto.gov

DUANE MORRIS LLP - NY
PATENT DEPARTMENT
1540 BROADWAY
NEW YORK NY 10036-4086

MAILED

MAY 06 2009

OFFICE OF PETITIONS

In re Application of	:	
Mallon, et al.	:	DECISION GRANTING
Application No.: 12/120,062	:	STATUS UNDER
Filed: May 13, 2008	:	37 CFR 1.47(a)
Attorney Docket No.: Y3222-00002	:	

This is a decision on the renewed petition under 37 CFR 1.47(a), filed April 17, 2009.

The petition is **GRANTED**.

Petitioner has shown that the non-signing inventor, Paul Mallon, has refused to join in the filing of the above-identified application.

The application and papers have been reviewed and found in compliance with 37 CFR 1.47(a). This application is hereby accorded Rule 1.47(a) status.

As provided in 37 CFR 1.47(c), this Office will forward notice of this application's filing to the non-signing inventor at the address given in the petition. Notice of the filing of this application will also be published in the Official Gazette.

This application is being referred to Technology Center A.U. 3679 for examination in due course.

Telephone inquiries should be directed to the undersigned at (571) 272-3230.

Shirene Willis Brantley

Shirene Willis Brantley
Senior Petitions Attorney
Office of Petitions

UNITED STATES PATENT AND TRADEMARK OFFICE

Commissioner for Patents
United States Patent and Trademark Office
P.O. Box 1450
Alexandria, VA 22313-1450
www.uspto.gov

MAILED

MAY 06 2009

OFFICE OF PETITIONS

PAUL MALLON
29 BISHOPS ORCHARD
TYRELLSTOWN, DUBLIN 15
IRELAND

In re Application of	:	
Mallon, et al.	:	
Application No.: 12/120,062	:	LETTER
Filed: May 13, 2008	:	
Attorney Docket No.: Y3222-00002	:	

Dear Mr. Mallon:

You are named as a joint inventor in the above-identified United States patent application, filed under the provisions of 35 U.S.C. 116 (United States Code), and 37 CFR 1.47(a), Rules of Practice in Patent Cases. Should a patent be granted on the application you will be designated therein as a joint inventor.

As a named inventor you are entitled to inspect any paper in the file wrapper of the application, order copies of all or any part thereof (at a prepaid cost per 37 CFR 1.19) or make your position of record in the application. Alternatively, you may arrange to do any of the preceding through a registered patent attorney or agent presenting written authorization from you. If you care to join the application, counsel of record (see below) would presumably assist you. Joining the application would entail the filing of an appropriate oath or declaration by you pursuant to 37 CFR 1.63.

Telephone inquiries regarding this communication should be directed to the undersigned at (571) 272-3230. Requests for information regarding your application should be directed to the File Information Unit at (703) 308-2733. Information regarding how to pay for and order a copy of the application, or a specific paper in the application, should be directed to the Certification Division at (571) 272-3150 or 1 (800) 972-6382 (outside the Washington, DC area).

Shirene Willis Brantley
Senior Petitions Attorney
Office of Petitions

ATTORNEYS OF RECORD: DUANE MORRIS LLP - NY
PATENT DEPARTMENT
1540 BROADWAY
NEW YORK NY 10036-4086

UNITED STATES PATENT AND TRADEMARK OFFICE

Commissioner for Patents
United States Patent and Trademark Office
P.O. Box 1450
Alexandria, VA 22313-1450
www.uspto.gov

DUANE MORRIS LLP – NY
PATENT DEPARTMENT
1540 BROADWAY
NEW YORK NY 10036-4086

MAILED

JUL 06 2010

OFFICE OF PETITIONS

In re Application of	:	
Paul MALLON, et al	:	
Application No. 12/120,062	:	DECISION ON PETITION
Filed: May 13, 2008	:	TO WITHDRAW
Attorney Docket No. Y3222-00002	:	FROM RECORD

This is a decision on the Request to Withdraw as attorney or agent of record under 37 C.F.R. § 1.36(b), filed May 10, 2010.

The request is **APPROVED**.

A grantable request to withdraw as attorney/agent of record must be signed by every attorney/agent seeking to withdraw or contain a clear indication that one attorney is signing on behalf of another/others. The Office requires the practitioner(s) requesting withdrawal to certify that he, she, or they have: (1) given reasonable notice to the client, prior to the expiration of the response period, that the practitioner(s) intends to withdraw from employment; (2) delivered to the client or a duly authorized representative of the client all papers and property (including funds) to which the client is entitled; and (3) notified the client of any responses that may be due and the time frame within which the client must respond, pursuant 37 CFR 10.40(c).

The request was signed by Ian Scott, on behalf of the attorneys of record associated with Customer No. 42109.

The attorneys of record associated with Customer No. 42109 have been withdrawn.

Applicant is reminded that there is no attorney of record at this time.

The correspondence address for future communications from the Office has been changed and the new correspondence address is indicated below.

Telephone inquiries concerning this decision should be directed to the undersigned at 571-272-6735.

/dcg/
Diane C. Goodwyn
Petitions Examiner
Office of Petitions

cc : TERRY MCSWEENEY
TIMPAANSTRAAT 32
HELMOND 5705 KM NETHERLANDS

UNITED STATES PATENT AND TRADEMARK OFFICE

UNITED STATES DEPARTMENT OF COMMERCE
United States Patent and Trademark Office
Address: COMMISSIONER FOR PATENTS
P.O. Box 1450
Alexandria, Virginia 22313-1450
www.uspto.gov

APPLICATION NUMBER	FILING OR 371(C) DATE	FIRST NAMED APPLICANT	ATTY. DOCKET NO./TITLE
12/120,062	05/13/2008	Paul Mallon	Y3222-00002

CONFIRMATION NO. 4187

POWER OF ATTORNEY NOTICE

42109
DUANE MORRIS LLP - NY
PATENT DEPARTMENT
1540 BROADWAY
NEW YORK, NY 10036-4086

OC000000042416759

Date Mailed: 07/02/2010

NOTICE REGARDING CHANGE OF POWER OF ATTORNEY

This is in response to the Power of Attorney filed 05/10/2010.

- The withdrawal as attorney in this application has been accepted. Future correspondence will be mailed to the new address of record. 37 CFR 1.33.

/dcgoodwyn/

Office of Data Management, Application Assistance Unit (571) 272-4000, or (571) 272-4200, or 1-888-786-0101

UNITED STATES PATENT AND TRADEMARK OFFICE

Commissioner for Patents
United States Patent and Trademark Office
P.O. Box 1450
Alexandria, VA 22313-1450
www.uspto.gov

Fleit Gibbons Gutman Bongini & Bianco PL
21355 EAST DIXIE HIGHWAY
SUITE 115
MIAMI FL 33180

JUN 13 2008

In re Application of: Winter, Thomas, et al.
Application No.: 12/120,066
Filed: May 13, 2008
Title: APPARATUS/METHOD FOR PRODUCING HOT GAS AND DIESEL PARTICULATE FILTER SYSTEM

DECISION ON PETITION TO MAKE SPECIAL FOR NEW APPLICATION UNDER 37 C.F.R. § 1.102 & M.P.E.P. § 708.02

This is a decision on the petition filed on May 13, 2008 to make the above-identified application special for accelerated examination procedure under 37 C.F.R. § 1.102(d).

The petition to make the application special is **DISMISSED**.

REGULATION AND PRACTICE

A grantable petition to make special under 37 C.F.R. § 1.102(d) and pursuant to the "Change to Practice for Petitions in Patent Applications to Make Special and for Accelerated Examination" published in the Federal Register on June 26, 2006 (71 Fed. Reg. 36323), must satisfy the following conditions:

I. Conditions Regarding the Application:

1. the application must be a non-reissue utility or design application filed under 37 CFR 1.111(a);

2. the application, the petition and the required fees must be filed electronically using the USPTO's electronic filing system (EFS), or EFS-web; if not filed electronically, a statement asserting that EFS and EFS-web were not available during the normal business hours.

3. at the time of filing, the application must be complete under 37 CFR 1.51 and in condition for examination;

4. the application must contain three or fewer independent claims and twenty or fewer total claims and the claims must be directed to a single invention.

II. Conditions Regarding the Petition:

The petition must:

1. be filed with the application;

2. include a statement that applicant agrees not to separately argue the patentability of any independent claim during any appeal in the application;

3. include a statement that applicant agrees to make an election without traverse in a telephone interview.

4. include a statement that applicant agrees to conduct such an interview when requested by the examiner.

5. include a statement, made based on a good faith belief, that a preexamination search in compliance with the following requirements, was conducted, including an identification of the field of search by United States class and subclass, where applicable, and for database searches; the search logic or chemical structure or sequence used as a query, the name of the file(s) searched and the database service, and the date of the search.

The preexamination search must:

5.1 involve U.S. patents and patent application publications, foreign patent documents, and non-patent literature, unless the applicant can justify with reasonable certainty that no references more pertinent than those already identified are likely to be found in the eliminated sources and includes such a justification with this statement;

5.2. be directed to the claimed invention and encompass all of the features of the claims, giving the claims the broadest reasonable interpretation;

5.3. encompass the disclosed features that may be claimed.

6. must provide in support of the petition an accelerated examination support document. An accelerated examination support document must include:

6.1. an information disclosure statement (IDS) in compliance with 37 CFR 1.98 citing each reference deemed most closely related to the subject matter of each of the claims;

6.2. an identification of all the limitations in the claims that are disclosed by the reference specifying where the limitation is disclosed in the cited reference;

6.3. a detailed explanation of how each of the claims are patentable over the references cited with particularity required by 37 CFR 1.111(b) and (c);

6.4. a concise statement of the utility of the invention as defined in each of the independent claims (unless the application is a design application);

6.5. a showing of where each limitation of the claims finds support under 35 U.S.C. 112, first paragraph, in the written description of the specification. If applicable, the showing must also identify: (1) each means- (or step) plus-function claim element that invokes consideration under 35 U.S.C. 112, sixth paragraph; and (2) the structure, material, or acts in the specification that corresponds to each means- (or step) plus-function claim element that invokes consideration under 35 U.S.C. 112, sixth paragraph; if the application claims the benefit of one or more applications under title 35, United States Code, the showing must also include where each limitation of the claims finds support under 35 U.S.C. 112, first paragraph, in each such application in which such supports exists;

6.6. an identification of any cited references that may be disqualified under 35 U.S.C. 103(c).

REVIEW OF FACTS

The conditions I: 1-4, II: 1-5, 5.1, 5.3, 6, 6.1 and 6.6 above are considered to have been met. However, the petition fails to comply with conditions II: 5.2, 6.2, 6.3, 6.4 and 6.5 above. Therefore, the petition fails to meet the required conditions to be accorded special status under the accelerated examination procedure.

Discussion

When referring to "the petition" herein below, the received papers under consideration include the four page PTO/SB/28 form "Petition to Make Special Under Accelerated Examination Program", the "pre-examination search document" including pages 1-11; the "accelerated examination support document" comprising pages 1-18, and an Information Disclosure Statement.

Regarding the requirements of section II element 5.2 outlined above, it appears the search outlined in the petition omitted a critical search area by not searching in class 60 subclasses 286, 297, 303, 307. A search in the appropriate subclasses of classes 95 and 96 also appears to be on point.

Regarding the requirements of section II element 6.2 outlined above, the petition fails to identify all of the limitations in the application claims that are disclosed in each of the reference(s) and where the limitation is disclosed in each of the cited reference. As stated in the policy published in the Federal Register on June 26, 2006 (71 Fed. Reg. 36323), for each reference cited, the examination support document must include an identification of all the limitations in the claims that are disclosed by the reference specifying where the limitation is disclosed in the cited reference. The policy statement does not caveat "the independent claims", nor does it allow for grouping and general discussions. A grantable petition must delineate every limitation of every claim and identify where the equivalent limitation is disclosed in each piece of prior art cited on the IDS. As is published on www.uspto.gov/web/patents/accelerated/ in "Guidelines for Applicants under the new accelerated examination procedures"):

> *For each reference cited, the accelerated examination support document must include an identification of all the limitations in the claims that are disclosed by the reference specifying where the limitation is disclosed in the cited reference. Applicants should specify where in each of the cited references the particular claim limitations are found. This process is intended to be analogous to the analysis an examiner uses when locating a relevant prior art reference and then determining whether the reference contains the claimed limitation. For each claimed limitation, the examiner would consider the disclosure of the reference and all reasonable portions in the reference where the limitation is shown. When preparing an Office Action, the examiner would correlate the limitation to the portion of reference which best characterizes the limitation. This part of the AESD is not intended to be an exhaustive listing of every conceivable subjective interpretation of how a claim limitation may read on the reference. Applicants should point out what are considered to be the relevant representations of the limitation in the reference. A limitation may be found in more than one portion of the reference and should be pointed out, yet the intention is not to have applicants point out every conceivable interpretation. The USPTO will adopt a rule of reason when evaluating this portion of the AESD. Unless the representation is so deficient that it would materially effect examination of the application (e.g., numerous instances where the limitations are not shown where applicant states they are), the representation will be deemed to be sufficient for this part of the AESD.*

Petitioner's submission is not specific enough. Petitioner points out some limitations of some of the claims and provides direction to areas of the prior art where the corresponding limitation may be found. However the mapping of the claims limitations unto the most closely related prior art lacks the required specificity. Petitioner does not address each limitation and where it is (or state that it is not) found in each one of the most closely related prior art. The requirement of section II element 6.2 can be satisfied by listing verbatim ("copy and paste") all the presently filed claims (i.e., the claims of the instant application) and by indicating where each limitation of each one of said presently filed claims is taught (or is not taught) in each one of the cited most closely related references, by specifically indicating the element number and/or the relevant page/paragraph and line number(s), or by indicating "(not disclosed)" where appropriate - in order to ensure that no limitation was left out inadvertently. This one-to-one mapping should be performed individually, with regard to each one of the most closely related prior art that has been cited, one reference at a time. This mapping should be done similarly to Applicant's showing of where each limitation of the claims finds support under 35 USC 112, 1st paragraph, as in section II: element 6.5 (labeled 9F (should have been 9E) on p. 11 of the AESD). Note however that the format of the claims can be free, no table is necessary.

Similarly, with respect to the requirements of section II element 6.3 outlined above, the petition fails to provide a detailed explanation of how each one of the claims is patentable over (each of) the reference(s) with particularity required by 37 CFR 1.111(b) and (c). Petitioners should be specific in their explanation and include the identification of specific claim limitations that support their position, where appropriate. Petitioners must distinguish each claim from each piece of prior art cited. General statements that the claims are neither anticipated nor rendered obvious by the cited references or that the references are not properly combinable will not be acceptable. The Office cannot infer or guess what petitioner believes the differences between the claims and the teachings of the prior art to be. Petitioner's statements must also be consistent and must be related to the claim language. In the instant petition, the arguments lack specificity, and it appears that the arguments for claims 5, 7, 8, and 13 are missing. For these reasons, the petition does not meet the requirement of section II, element 6.3. The requirement of section II element 6.3 can be satisfied by indicating for each one of the presently filed claims (i.e., the claims of the instant application) which specific limitation(s) in each one of said presently filed claims define(s) over each one of the most closely related references that has been cited. With regard to each dependent claim, there should be an unequivocal statement whether the patentability of each dependent claim is predicated solely on that of the claim from which it depends, or Applicant should provide a detailed explanation of patentability specific to that particular claim. This patentability showing should be performed individually, with regard to each one of the most closely related prior art that has been cited, one reference at a time.

Regarding the requirements of section II element 6.4 outlined above, the petition fails to identify a concise statement of the utility of the invention as defined in each of the independent claims. A general statement directed to the overall concept of the invention is not specifically relating the utility to each of the independent claims as is required by the policy. Petitioner should reference each independent claim specifically when discussing the utility of the invention.

Regarding the requirements of section II element 6.5 outlined above, the requirements of this section are not met. A grantable petition requires petitioner to provide a showing of where each limitation of the claims finds specific support (i.e., page and line numbers and element number) under 35 U.S.C. 112, first paragraph, in the written description of the specification, and in each application that the present application claims the benefit of domestic priority. This requirement for the present application has been satisfied in full. However, the mapping unto each application that the present application claims the benefit of domestic priority is missing. If the priority (parent) application(s) is/are substantially identical to the present application, a statement in this regard will suffice. If however there are substantial differences, a full mapping is required.

DECISION

For the above-stated reasons, the petition is **dismissed**. The application will therefore be taken up by the examiner for action in its regular turn.

Petitioner is given a single opportunity to perfect the petition. Any request for reconsideration of this decision must be submitted within 1 (one) month or 30 (thirty) days, whichever is longer, (no extension of time under 37 CFR 1.136(a)) from the date of this decision in order to be considered timely. Any request for reconsideration must address all of the deficiencies indicated above.

Petitioner is reminded that, upon granting of the special status of the application on request for reconsideration, the application will be processed expeditiously. However, due to the dismissal of the instant petition, examination may not be completed within twelve months of the filing date of the application.

Any inquiry regarding this decision should be directed to Ehud Gartenberg, TC 3700 Special Programs Examiner, at (571) 272-4828. In his absence, an inquiry can be directed to J. Harrison, Special Program Examiner, at 571 272-4449.

Ehud Gartenberg

Ehud Gartenberg
Special Programs Examiner
Technology Center 3700

UNITED STATES PATENT AND TRADEMARK OFFICE

Commissioner for Patents
United States Patent and Trademark Office
P.O. Box 1450
Alexandria, VA 22313-1450
www.uspto.gov

Fleit Gibbons Gutman Bongini & Bianco PL
21355 EAST DIXIE HIGHWAY
SUITE 115
MIAMI FL 33180

JUL 16 2008

In re Application of: Winter, Thomas, et al. Serial No.: 12/120,066 Filed: May 13, 2008 Title: APPARATUS/METHOD FOR PRODUCING HOT GAS AND DIESEL PARTICULATE FILTER SYSTEM	:	DECISION ON PETITION TO MAKE SPECIAL FOR NEW APPLICATION UNDER 37 C.F.R. § 1.102 & M.P.E.P. § 708.02

This is a decision on the request for reconsideration filed on July 14, 2008 to make the above-identified application special for accelerated examination procedure under 37 C.F.R. § 1.102(d). The request has been treated as a renewed petition to make the above-identified application special and has been viewed as a supplement to and in combination with the original petition which was filed on May 13, 2008 and dismissed in the Office letter of June 13, 2008.

The petition to make the application special is **DENIED.**

REGULATION AND PRACTICE

A grantable petition to make special under 37 C.F.R. § 1.102(d) and pursuant to the "Change to Practice for Petitions in Patent Applications to Make Special and for Accelerated Examination" published in the Federal Register on June 26, 2006 (71 Fed. Reg. 36323), must satisfy the conditions as outlined in the prior petition decision. The conditions are not repeated herein.

REVIEW OF FACTS

As stated in the decision of June 13, 2008 conditions I: 1-4, II: 1-5, 5.1, 5.3, 6, 6.1 and 6.6 were considered to have been met. However, the petition failed to comply with conditions II: 5.2 and 6.2, 6.3, 6.4 and 6.5. Upon reconsideration, the petition is considered to additionally meet II: 5.2. However, the petition still fails to meet the requirement of section II: 6.2, 6.3, 6.4 and 6.5. Therefore, the petition fails to meet the required conditions to be accorded special status under the accelerated examination procedure.

DISCUSSION

The dismissal of the petition dated June 13, 2008 detailed the conditions for an Accelerated Examination petition to be granted. Those conditions will not be repeated. The petition has been reconsidered and is denied for the following reasons.

Regarding the requirement of section II element 6.2, the request for reconsideration lacks specificity and possibly contains errors. For example, on pp 9-10 of the Accelerated Examination Support Document (AESD), with respect to mapping the claimed limitations unto Berendes 5,094,075 Petitioner states:

"13) An apparatus for producing hot gas, comprising:

a first combustion chamber (2) to burn fuel (17), wherein the first combustion chamber features an open (5) and a closed end (36), and wherein the first combustion chamber has a fuel inlet (13) arranged at its closed end – Not Disclosed" (the reference numbers in parentheses referrer to the instant application, NOT prior art Berendes)

Berendes discloses in Figure 1 an apparatus as claimed (see below).

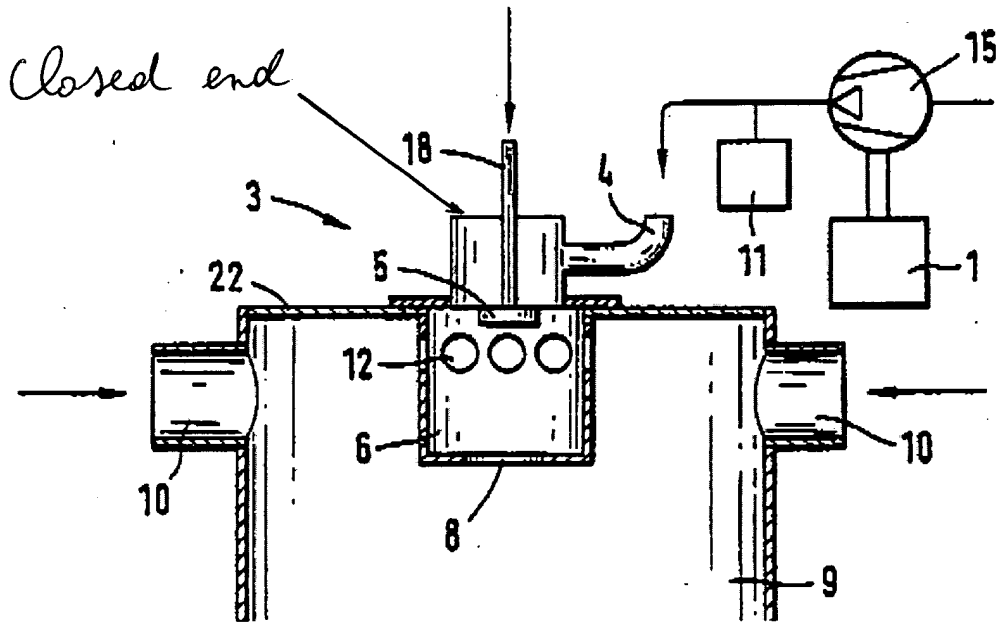

The following mapping of said claim 13 limitations unto Berendes is proposed:

An apparatus (3) for producing hot gas, comprising:

a first combustion chamber (6) to burn fuel (18), wherein the first combustion chamber (6) features an open (8) and a closed end (the closed end is the wall through which fuel line 18 penetrates into the first combustion chamber), and wherein the first combustion chamber (6) has a fuel inlet (18) arranged at its closed end;

Also note that 9 is the second combustion chamber, 10 is the inlet of the exhaust gas from the Diesel, 4 is the inlet of air into the first combustion chamber, 5 is the swirler-atomizer of the fuel 18 – all as presently disclosed and further claimed. Note that the closed end wall is absolutely necessary for the proper operation of Berendes; without it combustion gases 10, air 4, and

atomized fuel 18 could have flown both upstream and downstream the combustor, instead of flowing downstream only, into second combustor 9.

As a courtesy to the Petitioner and for future reference, it is noted that the requirement of section II element 6.2 can be satisfied by listing verbatim ("copy and paste") all the presently filed claims (i.e., the claims of the instant application) and by indicating where each limitation of each one of said presently filed claims is taught (or is not taught) in each one of the cited most closely related references, by specifically indicating the element number and/or the relevant page/paragraph and line number(s), or by indicating "(not disclosed)" where appropriate - in order to ensure that no limitation was left out inadvertently. This one-to-one mapping should be performed individually, with regard to each one of the most closely related prior art that has been cited, one reference at a time. Applicant's attention is drawn to the fact that the requirement of this element calls for a straight mapping of each single limitation unto the prior art. Section II element 6.2 is not the place to make patentability arguments by bundling together multiple limitations and concluding that the combination is not disclosed. Patentability arguments should be made only in response to the requirement of section II element 6.3.

Regarding the requirement of section II element 6.3, the request for reconsideration lacks specificity. For example, on p. 30 of the AESD, with respect to claim 2, Petitioner writes:

2)

The diesel particulate filter system according to Claim 1, wherein the first and second combustion chambers are formed by first (4) and second sections of piping (3), wherein the first section of piping (4) is arranged within the second section of piping (3), and	[Col 5, ln 6] *The secondary combustion chamber 9, like the primary combustion chamber 6, is cylindrical. The exhaust-gas line 10 is connected at its periphery and in the upstream part. In the case of a plurality of exhaust-gas lines 10, their spacings at the periphery of the secondary combustion chamber 9 are equal, as illustrated in FIG. 2.*

It is unclear from the above whether or not claim 2 contains limitations that define over the prior art, or is patentable solely because of the limitations of claim1 from which it depends. A similar deficiency is shown e.g., with regard to claim 6, on p. 43 of the AESD:

6)

The diesel particulate filter according to Claim 4, wherein the first combustion chamber is secured within the second combustion chamber by the fuel supply line.	The reference specifically teaches that the cup shaped member 23 is connected to the combustion liner 21. As stated at [Col 3, ln 4], *A cylindrical cup-shaped member 23 is fixed at its open end to the combustion liner 21 to define thereon a reverse-flow evaporation chamber 24 with the other end thereof being closed.*

As a courtesy to the Petitioner and for future reference, it is noted that the requirement of section II element 6.3 can be satisfied by indicating <u>for each one</u> of the presently filed claims (i.e., the claims of the instant application) which <u>specific</u> limitation(s) in <u>each one</u> of said presently filed claims define(s) over each one of the most closely related references that has been cited. <u>With regard to each dependent claim, there should be an unequivocal statement whether the patentability of each dependent claim is predicated solely on that of the claim from which it depends, or Applicant should provide a detailed explanation of patentability specific to that particular claim.</u> This patentability showing should be performed individually, with regard to each one of the most closely related prior art that has been cited, <u>one reference at a time</u>.

Regarding the requirements of section II element 6.4, the petition for reconsideration fails to identify a <u>concise</u> statement of the utility of the invention as separately defined in <u>each one of the independent claims</u>. The utility of the dependent claims is not part of the requirement. Petitioner should reference separately each one of the independent claims specifically when discussing the utility of the invention. In the instant case the, the required "concise" statement extends over approximately eight(!) pages (pp. 58-66).

Regarding the requirements of section II element 6.5, the petition for reconsideration lacks specificity for numerous claims and limitations. For example, in the AESD, on p. 75, Petitioner states:

6)

The diesel particulate filter according to Claim 4, wherein the first combustion chamber is secured within the second combustion chamber by the fuel supply line.

As another example, on p. 80, Petitioner states:

16)

The apparatus according to Claim 13 with a high-pressure pump to supply the fuel to the first combustion chamber via a nozzle, wherein the control means is designed in such a way that the fuel supply takes place via the fuel inlet during the start-up phase and via the nozzle after the start-up phase.

As understood, the right hand side column of the page, which is not reproduced here, refers to a parent application. However, the left hand side column, which is reproduced above, should have contained the mapping unto the present specification, satisfying the requirements of 35 USC 112, first paragraph. In addition, it is noted that the mapping referring to the mapping of the "means plus function" language according to 35 USC 112, sixth paragraph is deficient, because lack of specificity, both in identifying the limitation language in the claims and in specifically identifying the means and their function in the specification.

As a courtesy to the Petitioner and for future reference, it is noted that the requirement of section II element 6.5 can be satisfied by listing verbatim all the presently filed claims (by "copy and paste") and by indicating where the instant application (and separately each one of the priority documents – if applicable) teaches each limitation (without bundling limitations together to the extent possible) in each one of said presently filed claims, by indicating the element number and/or the relevant page and line numbers. Applicant's attention is also drawn to the requirements relevant under 35 U.S.C 112, 6th paragraph, listed above.

DECISION

For at least the above-stated reason (for failing to meet the requirement of section II: elements 6.2, 6.3, 6.4, and 6.5), the petition is **DENIED**. The application will remain in its regular status and will be taken up by the examiner for action in its regular turn.

Petitioner is reminded that a single opportunity to perfect the petition is given. Therefore, further petitions for accelerated examination in this application will not be entertained.

Any inquiry regarding this decision should be directed to Ehud Gartenberg, TC 3700 Special Program Examiner, at (571) 272-4828. In his absence, an inquiry can be directed to J. Harrison, Special Program Examiner, at 571 272-4449.

Ehud Gartenberg
Special Program Examiner
Technology Center 3700

UNITED STATES PATENT AND TRADEMARK OFFICE

Commissioner for Patents
United States Patent and Trademark Office
P.O. Box 1450
Alexandria, VA 22313-1450
www.uspto.gov

Three Palm Software LLC
367 Penn Way
Los Gatos CA 95032

COPY MAILED

APR 09 2009

OFFICE OF PETITIONS

In re Application of Zhang et al. Application No.: 12/120084 Filing or 371(c) Date: 05/13/2008 Title of Invention: COMMUNICATIVE CAD SYSTEM FOR ASSISTING BREAST IMAGING DIAGNOSIS	: : : : : : : : :	DECISION ON PETITION

This is a decision in response to the petition to withdraw holding of abandonment of nonprovisional application under 37 CFR 1.181, filed February 18, 2009.

This Petition is hereby **dismissed**.

Any further petition must be submitted within TWO (2) MONTHS from the mail date of this decision. Extensions of time under 37 CFR 1.136(a) are permitted. The reconsideration request should include a cover letter entitled "Renewed Petition under [insert the applicable code section]." This is **not** final agency action within the meaning of 5 U.S.C. § 704.

The above-identified application became abandoned for failure to timely and properly reply to the Notice to File Corrected Application Papers ("Notice"), mailed May 23, 2008. The Notice required replacement drawings; set a two (2) month period for reply, and provided for extensions of time under 37 CFR 1.136(a). No reply having been received, the application became abandoned on July 24, 2008. A Notice of Abandonment was mailed February 2, 2009.

Petition under 37 CFR 1.181

Applicant files the present petition and asserts that a timely reply to the Notice was filed on June 30, 2008. In support of this assertion, Applicant files a copy of his Electronic Acknowledgment Receipt. A review of the Electronic Acknowledgment Receipt reveals that under Application Type, Applicant entered "Utility Under 35 USC 111(a) (Pre-Grant Publication under 37 CFR 1.211 to 1.221)."

Applicant is advised that 37 CFR §§ 1.211 to 1.221 govern Pre-Grant Publication of applications, and Pre-Grant Publication submissions do not become part of the IFW as they are used for creating the publication. See, 37 CFR §§ 1.211 to 1.221.

In this instance, Applicant entered an incorrect Application Type when filing the reply to the Notice. Applicant is advised that it is Applicant's responsibility to file a complete and proper reply to the Office action as the condition of the application requires. (Prosecution of an application to save it from abandonment pursuant to paragraph (a) of this section must include such complete and proper reply as the condition of the application may require. Accord 37 CFR 1.135(b). Applicant failed to properly respond to the Notice. The application is abandoned.

Alternative venue

Applicant is strongly urged to file a petition stating that the delay was unintentional[1]. An "unintentional" petition under 37 CFR 1.137(b) must be accompanied by the required fee.

The filing of a petition under 37 CFR 1.137(b) cannot be intentionally delayed and therefore must be filed promptly. A person seeking revival due to unintentional delay can not make a statement that the delay was unintentional unless the entire delay, including the delay from the date it was discovered that the application was abandoned until the filing of the petition to revive under 37 CFR 1.137(b), was unintentional. A statement that the delay was unintentional is not appropriate if petitioner intentionally delayed the filing of a petition for revive under 37 CFR 1.137(b).

Further correspondence with respect to this matter should be addressed as follows:

By mail:	Commissioner for Patents PO Box 1450 Alexandria, VA 22313-1450
By FAX:	(571) 273-8300 Attn: Office of Petitions
By hand:	Customer Service Window Randolph Building 401 Dulany Street Alexandria, VA 22314

Telephone inquiries concerning the Amendment should be directed to the Examiner. Questions regarding this decision should be directed to the undersigned at (571) 272-3232.

/Derek L. Woods/
Derek L. Woods
Attorney
Office of Petitions

---

[1] A petition based upon unavoidable delay would be inappropriate. The MPEP 711.03(c) provides: Delay resulting from the lack of knowledge or improper application of the patent statute, rules of practice or the MPEP, however, does not constitute "unavoidable" delay. See Haines v. Quigg, 673 F. Supp. 314, 316-17, 5 USPQ2d 1130, 1131-32 (N.D. Ind. 1987).

UNITED STATES PATENT AND TRADEMARK OFFICE

Commissioner for Patents
United States Patent and Trademark Office
P.O. Box 1450
Alexandria, VA 22313-1450
www.uspto.gov

Three Palm Software LLC
367 Penn Way
Los Gatos CA 95032

MAILED

JUN 0 3 2009

OFFICE OF PETITIONS

In re Application of	:	
Zhang et al.	:	
Application No. 12/120084	:	
Filing or 371(c) Date: 05/13/2008	:	
Title of Invention: COMMUNICATIVE CAD	:	
SYSTEM FOR ASSISTING BREAST	:	DECISION
IMAGING DIAGNOSIS	:	ON PETITION

This is a decision on the Petition filed April 20, 2009. The petition is properly treated as a renewed petition to withdraw the holding of abandonment based on evidence that a timely reply was filed. Accord MPEP 711.03(c)B.

This Petition is hereby **granted**.

The above-identified application became abandoned for failure to timely and properly reply to the Notice to File Corrected Application Papers ("Notice"), mailed May 23, 2008. The Notice required replacement drawings; set a two (2) month period for reply, and provided for extensions of time under 37 CFR 1.136(a). No response having been received, the application became abandoned July 24, 2008. A Notice of Abandonment was mailed February 2, 2009.

The February 18, 2009 Petition

Applicant filed a petition on February 9, 2009 wherein Applicant asserted that a timely reply to the Notice was filed on June 30, 2008. In support of this assertion, Applicant filed a copy of his Electronic Acknowledgment Receipt. A review of the copy of the Electronic Acknowledgment Receipt revealed that under "Application Type," Applicant entered Utility Under 35 USC 111(a) (Pre-Grant Publication under 37 CFR 1.211 to 1.221)."

The petition was dismissed in a Dicision mailed April 9, 2009, based upon Applicant's incprrect entry of the Application Type.

The present Renewed Petition

Applicant files the present renewed petition and asserts that the Application Type was a pre-filled value in the receipt generated by the on-line system, and not entered by Applicant.

"A postcard receipt[1] which itemizes and properly identifies the papers which are being filed serves as *prima facie* evidence of receipt in the PTO of all items listed thereon by the PTO." MPEP § 503.

In View of the foregoing, the petition is granted. The holding of abandonment is hereby withdrawn.

No petition fee has been charged and none is due[2].

The application will be referred to the Office of Patent Application Processing for processing of the copy of the reply filed April 18, 2009, and for continued processing in due course.

Telephone inquiries concerning this matter should be directed to the undersigned at (571) 272-3232.

/Derek L. Woods/
Derek L. Woods
Attorney
Office of Petitions

---

[1] An acknowledgment receipt is a legal equivalent of a post card receipt described in the Manual of Patent Examining Procedure (MPEP), Section 503. See, 1315 OG 57; 72 Fed. Reg. 2770 (23 Jan 2007).

[2] Applicant states that the petition fee of $810.00 has been enclosed with the present petition; however, Office records do not indicate receipt of the petition fee.

UNITED STATES PATENT AND TRADEMARK OFFICE

Commissioner for Patents
United States Patent and Trademark Office
P.O. Box 1450
Alexandria, VA 22313-1450
www.uspto.gov

MUNCY, GEISSLER, OLDS & LOWE, PLLC
4000 LEGATO ROAD
SUITE 310
FAIRFAX VA 22033

MAILED

JUN 14 2010

OFFICE OF PETITIONS

In re Application of	:	
Yu Cheng Liao	:	
Application Number: 12/120,111	:	NOTICE
Filing or 371(c) Date: 05/13/2008	:	
Attorney Docket Number: 3722-0510PUS1	:	

This is a notice regarding your request for acceptance of a fee deficiency submission under 37 CFR 1.28 filed on April 5, 2010.

The Office no longer investigates or rejects original or reissue patent under 37 CFR 1.56. **1098 Off. Gaz. Pat. Office 502 (January 3, 1989)**. Therefore, nothing in this Notice is intended to imply that an investigation was done.

Your fee deficiency submission under 37 CFR 1.28 is hereby **ACCEPTED**.

This application is no longer entitled to small entity status. Accordingly, all future fees paid in this application must be paid at the large entity rate.

Inquiries related to this communication should be directed to the undersigned at (571) 272-3231.

D Wood

Douglas Wood
Attorney
Office of Petitions

UNITED STATES PATENT AND TRADEMARK OFFICE

Commissioner for Patents
United States Patent and Trademark Office
P.O. Box 1450
Alexandria, VA 22313-1450
www.uspto.gov

DORSEY & WHITNEY LLP
INTELLECTUAL PROPERTY DEPARTMENT
250 PARK AVENUE
NEW YORK NY 10177

MAILED

MAR 23 2009

OFFICE OF PETITIONS

In re Application of
Siltala et al.
Application No. 12/120,123
Filed: May 13, 2008
Attorney Docket No. 190300/US-479686-00061

DECISION ON PETITION

This is a decision on the petition, filed February 13, 2009, which is being treated as a petition under 37 CFR 1.181 (no fee) requesting withdrawal of the holding of abandonment in the above-identified application.

The petition under 37 CFR 1.181 is **DISMISSED**.

Any request for reconsideration of this decision should be filed within two (2) months from the mail date of this decision. *Note* 37 CFR 1.181(f). The request for reconsideration should include a cover letter and be entitled as a "Renewed Petition under 37 CFR 1.181 to Withdraw the Holding of Abandonment."

This application was held abandoned for failure to timely respond to the Notice to File Missing Parts (Notice) of May 27, 2008, which set a two (2) month shortened statutory period for reply. A Notice of Abandonment was mailed on February 5, 2009.

Petitioner asserts that the Notice to File Missing Parts dated May 27, 2008 was not received.

A review of the written record indicates no irregularity in the mailing of the Notice, and, in the absence of any irregularity, there is a strong presumption that the Office action was properly mailed to the practitioner at the address of record. This presumption may be overcome by a showing that the Office action was not in fact received. In this regard, the showing required to establish the failure to receive the Office action must consist of the following:

1. a statement from practitioner stating that the Notice was not received by the practitioner. The statement should also describe the system used for recording an Office action received at the correspondence address of record and establish that the docketing system was sufficiently reliable;

2. a statement from the practitioner attesting to the fact that a search of the file jacket and docket records indicates that the Office action was not received; and

3. a copy of the master docket for the firm docket record where the nonreceived Notice would have been entered had it been received must be attached to and referenced in the practitioner's statement. If no master docket exists, the practitioner should so state and provide other evidence such, as but not limited: to the application file jacket, incoming mail log; calendar; reminder system or individual docket record for the application in question

See MPEP § 711.03(c) under subheading "Petition to Withdraw Holding of Abandonment Based on Failure to Receive Office Action," and "Withdrawing the Holding of Abandonment When Office Actions Are Not Received," 1156 Official Gazette 53 (November 16, 1993).

The petition fails to satisfy all of the above-stated requirements. Item(s) (1) and (3) has not been satisfied.

As to item (1), petitioner has failed to provide a statement describing the system used for recording correspondence and establish that the docketing system was sufficiently reliable.

As to item (3), a review of the docket records shows that petitioner has failed to provide master docket records for the firm. Nor has petitioner stated that a master docket does not exist. A copy of the practitioner's record(s) required to show non-receipt of the Office action should include the master docket for the firm. That is, if a three month period for reply was set in the nonreceived Office action, a copy of the master docket report showing all replies docketed for a date three months from the mail date of the nonreceived Office action must be submitted as documentary proof of nonreceipt of the Office action. If no such master docket exists, the practitioner should so state and provide other evidence such as, but not limited to, the following: the application file jacket; incoming mail log; calendar; reminder system; or the individual docket record for the application in question. See MPEP 711.03(c). Petitioner has only provided an individual docket record.

Accordingly, absent the required evidence to establish nonreceipt of the Notice of May 27, 2008, the petition requesting withdrawal of the holding of abandonment cannot be granted at this time.

If petitioner cannot supply the evidence necessary to withdraw the holding of abandonment, or simply does not wish to, petitioner should consider filing a petition under 37 CFR 1.137(b) stating that the delay was unintentional. Public Law 97-247, § 3, 96 Stat. 317 (1982), which revised patent and trademark fees, amended 35 U.S.C. § 41(a)(7) to provide for the revival of an "unintentionally" abandoned application without a showing that the delay in prosecution or in late payment of the issue fee was "unavoidable." This amendment to 35 U.S.C. § 41(a)(7) has been implemented in 37 CFR 1.137(b). An "unintentional" petition under 37 CFR 1.137(b) must be accompanied by the $810.00 petition fee.

Further correspondence with respect to this matter should be addressed as follows:

By Mail: Mail Stop PETITION
Commissioner for Patents
P. O. Box 1450
Alexandria, VA 22313-1450

By hand: U. S. Patent and Trademark Office
Customer Service Window, Mail Stop Petitions
Randolph Building
401 Dulany Street
Alexandria, VA 22314

By facsimile: **(571) 273-8300**
Attn: Office of Petitions

Telephone inquiries concerning this decision should be directed to the undersigned at (571) 272-3215.

Charlema Grant
Petitions Attorney
Office of Petitions

UNITED STATES PATENT AND TRADEMARK OFFICE

Commissioner for Patents
United States Patent and Trademark Office
P.O. Box 1450
Alexandria, VA 22313-1450
www.uspto.gov

DORSEY & WHITNEY LLP
INTELLECTUAL PROPERTY DEPARTMENT
250 PARK AVENUE
NEW YORK NY 10177

COPY MAILED

MAY 13 2009

OFFICE OF PETITIONS

In re Application of
Siltala et al.
Application No. 12/120,123
Filed: May 13, 2008
Attorney Docket No. 190300/US-479686-00061

DECISION ON PETITION

This is a decision on the renewed petition, filed April 27, 2009 and supplemented May 12, 2009, which is being treated as a petition under 37 CFR 1.181 (no fee) requesting withdrawal of the holding of abandonment in the above-identified application.

The petition is **GRANTED**.

This above-identified application became abandoned for failure to file a response to a Notice to file Missing Parts of a Nonprovisional Application, which was mailed on May 27, 2008. The Notice to File Missing Parts set an extendable two (2) month period for reply. No extensions of time were obtained under the provisions of 37 CFR §1.136(a). Accordingly, this application became abandoned on July 28, 2008. A Notice of Abandonment was mailed on February 5, 2009.

Petitioner asserts that the Notice to File Missing Parts dated May 27, 2008 was not received.

A review of the written record indicates no irregularity in the mailing of the Office action, and, in the absence of any irregularity, there is a strong presumption that the Office action was properly mailed to the practitioner at the address of record. This presumption may be overcome by a showing that the Office action was not in fact received. In this regard, the showing required to establish the failure to receive the Office action must consist of the following:

1. a statement from practitioner stating that the Office action was not received by the practitioner. The statement should also describe the system used for recording an Office action received at the correspondence address of record and establish that the docketing system was sufficiently reliable;

2. a statement from the practitioner attesting to the fact that a search of the file jacket and docket records indicates that the Office action was not received; and

3. a copy of the master docket for the firm docket record where the nonreceived Office action would have been entered had it been received must be attached to and

> referenced in the practitioner's statement. If no master docket exists, the practitioner should so state and provide other evidence such, as but not limited: to the application file jacket, incoming mail log; calendar; reminder system or individual docket record for the application in question.

See MPEP § 711.03(c) under subheading "Petition to Withdraw Holding of Abandonment Based on Failure to Receive Office Action," and "Withdrawing the Holding of Abandonment When Office Actions Are Not Received," 1156 Official Gazette 53 (November 16, 1993).

The petition satisfies the above-stated requirements. Accordingly, the application was not abandoned in fact.

This petition is being granted based upon practitioner's statement that a master docket does not exist and the evidence presented.

In view of the above, the Notice of Abandonment is hereby vacated and the holding of abandonment withdrawn.

This application is being referred to the Office of Patent Application Processing for re-mailing the Notice to File Missing Parts of May 27, 2008. The period for reply will run from the mailing date of the new Notice.

Telephone inquiries concerning this decision should be directed to the undersigned at (571) 272-3215.

Charlema Grant
Petitions Attorney
Office of Petitions

UNITED STATES PATENT AND TRADEMARK OFFICE

UNITED STATES DEPARTMENT OF COMMERCE
United States Patent and Trademark Office
Address: COMMISSIONER FOR PATENTS
P.O. Box 1450
Alexandria, Virginia 22313-1450
www.uspto.gov

KENYON & KENYON LLP
ONE BROADWAY
NEW YORK, NY 10004

Mail Date: 04/21/2010

Applicant	: Heinz Tovar	: DECISION ON REQUEST FOR
Patent Number	: 7667188	: RECALCULATION of PATENT
Issue Date	: 02/23/2010	: TERM ADJUSTMENT IN VIEW
Appliction No	: 12/120,126	: OF WYETH AND NOTICE OF INTENT TO
Filed	: 05/13/2008	: ISSUE CERTIFICATE OF CORRECTION
		:

The Request for Recalculation is **GRANTED** to the extent indicated.

The patent term adjustment has been determined to be **3** days. The USPTO will *sua sponte* issue a certificate of correction reflecting the amount of PTA days determined by the recalculation.

Prior to the issuance of the certificate of correction, the USPTO will afford patentee an opportunity to be heard and request reconsideration. Accordingly, patentee has **one month or thirty (30) days**, whichever is longer, to file a request for reconsideration of this patent term adjustment calculation. See 35 U.S.C. 154(b)(3)(B)(ii) and 37 CFR 1.322(a)(4). No extensions of time will be granted under 37 CFR 1.136.

Patentee should use document code PET.OP if electronically filing a request for reconsideration of this patent term adjustment calculation. The patentee must also include the information required by 37 CFR 1.705(b)(2) and the fee required by 37 CFR 1.18(e). If patentee does not file a timely request for reconsideration of this patent term adjustment calculation including the information required by 37 CFR 1.705(b)(2) and the fee required by 37 CFR 1.18(e), the USPTO will issue a certificate of correction reflecting the PTA determination noted above.

Patentee should be aware that in order to preserve the right to review in the United States District Court for the District of Columbia of the USPTO patent term adjustment determination, patentee must ensure that he or she also take the steps required under 35 U.S.C. 154(b)(4)(A) in a timely manner. Nothing in the request for recalculation should be construed as providing an alternative time frame for commencing a civil action under 35 U.S.C. 154(b)(4)(A).

Any questions concerning this decision should be directed to the Office of Patent Legal Administration at 571-272-7702.

UNITED STATES PATENT AND TRADEMARK OFFICE

UNITED STATES DEPARTMENT OF COMMERCE
United States Patent and Trademark Office
Address: COMMISSIONER FOR PATENTS
P.O. Box 1450
Alexandria, Virginia 22313-1450
www.uspto.gov

VIERRA MAGEN/SANDISK CORPORATION
575 MARKET STREET
SUITE 2500
SAN FRANCISCO, CA 94105

Mail Date: 04/21/2010

Applicant	: Jack H. Yuan	: DECISION ON REQUEST FOR
Patent Number	: 7615820	: RECALCULATION of PATENT
Issue Date	: 11/10/2009	: TERM ADJUSTMENT IN VIEW
Appliction No	: 12/120,134	: OF WYETH AND NOTICE OF INTENT TO
Filed	: 05/13/2008	: ISSUE CERTIFICATE OF CORRECTION
		:

The Request for Recalculation is **GRANTED** to the extent indicated.

The patent term adjustment has been determined to be **0** days. The USPTO will *sua sponte* issue a certificate of correction reflecting the amount of PTA days determined by the recalculation.

Prior to the issuance of the certificate of correction, the USPTO will afford patentee an opportunity to be heard and request reconsideration. Accordingly, patentee has **one month or thirty (30) days**, whichever is longer, to file a request for reconsideration of this patent term adjustment calculation. See 35 U.S.C. 154(b)(3)(B)(ii) and 37 CFR 1.322(a)(4). No extensions of time will be granted under 37 CFR 1.136.

Patentee should use document code PET.OP if electronically filing a request for reconsideration of this patent term adjustment calculation. The patentee must also include the information required by 37 CFR 1.705(b)(2) and the fee required by 37 CFR 1.18(e). If patentee does not file a timely request for reconsideration of this patent term adjustment calculation including the information required by 37 CFR 1.705(b)(2) and the fee required by 37 CFR 1.18(e), the USPTO will issue a certificate of correction reflecting the PTA determination noted above.

Patentee should be aware that in order to preserve the right to review in the United States District Court for the District of Columbia of the USPTO patent term adjustment determination, patentee must ensure that he or she also take the steps required under 35 U.S.C. 154(b)(4)(A) in a timely manner. Nothing in the request for recalculation should be construed as providing an alternative time frame for commencing a civil action under 35 U.S.C. 154(b)(4)(A).

Any questions concerning this decision should be directed to the Office of Patent Legal Administration at 571-272-7702.

UNITED STATES PATENT AND TRADEMARK OFFICE

Commissioner for Patents
United States Patent and Trademark Office
P.O. Box 1450
Alexandria, VA 22313-1450
www.uspto.gov

SQUIRE SANDERS & DEMPSEY LLP
TWO RENAISSANCE SQUARE
40 NORTH CENTRAL AVENUE, SUITE 2700
PHOENIX, AZ 85004-4498

MAILED

JUN 2 1 2010

OFFICE OF PETITIONS

In re Application of	:	
Paul V. COOPER	:	
Application No. 12/120,190	:	DECISION GRANTING PETITION
Filed: May 13, 2008	:	UNDER 37 CFR 1.313(c)(2)
Attorney Docket No. **023438.00056**	:	

This is a decision on the petition under 37 CFR 1.313(c)(2), filed June 17, 2010, to withdraw the above-identified application from issue after payment of the issue fee.

The petition is **GRANTED**.

The above-identified application is withdrawn from issue for consideration of a submission under 37 CFR 1.114 (request for continued examination). *See* 37 CFR 1.313(c)(2).

Petitioner is advised that the issue fee paid on May 17, 2010 cannot be refunded. If, however, this application is again allowed, petitioner may request that it be applied towards the issue fee required by the new Notice of Allowance.[1]

Telephone inquiries should be directed to the undersigned at (571) 272-7253.

This application is being referred to Technology Center AU 1793 for processing of the request for continued examination under 37 CFR 1.114 and for consideration of the concurrently filed information disclosure statement.

/Monica A. Graves/
Petitions Examiner, Office of Petitions

---

[1] *The request to apply the issue fee to the new Notice may be satisfied by completing and returning the new Part B – Fee(s) Transmittal Form (along with any balance due at the time of submission). Petitioner is advised that the Issue Fee Transmittal Form* ***must*** *be completed and timely submitted to avoid abandonment of the application.*

UNITED STATES PATENT AND TRADEMARK OFFICE

Commissioner for Patents
United States Patent and Trademark Office
P.O. Box 1450
Alexandria, VA 22313-1450
www.uspto.gov

SANDIA CORPORATION
P O BOX 5800
MS-0161
ALBUQUERQUE NM 87185-0161

In re Application of	:	JUL 27 2009
BRADSHAW, ROBERT W. et al.	:	
Application No.: 12/120,257	:	DECISION ON
Filing or 371(c) Date: 5/14/08	:	PETITION
Attorney Docket Number: SD10676.1/112,575	:	

This is a decision on the Petition to Withdraw Holding of Abandonment under 37CFR § 1.81 (a), received in the United States Patent and Trademark Office (USPTO) June 15, 2009.

This petition is **GRANTED**.

The application was held abandoned for failure to timely submit the Issue Fee and Publication fee as required by the Notice of Allowance, mailed March 17, 2009 which set forth a three (3) month statutory period of reply. The Notice of Abandonment was mailed on May 8, 2009.

Petitioner states that the issue fee transmittal and payment were timely filed via the USPTO on January 22, 2009. Petitioner submitted a copy of the original submission which included a properly completed Certificate of Mailing/Transmission.

In view of the foregoing, the holding of abandonment for failure to timely pay the issue fee is hereby withdrawn and the application restored to pending status. The Issue Fee has been charged to Deposit Account 19-0131.

Telephone inquiries concerning this matter should be directed to the undersigned at (703) 756-1547.

Kay D. Pinkney
Application Assistance Unit
Office of Data Management

UNITED STATES PATENT AND TRADEMARK OFFICE

Commissioner for Patents
United States Patent and Trademark Office
P.O. Box 1450
Alexandria, VA 22313-1450
www.uspto.gov

MAIL

JUL 2 4 2008

DIRECTOR'S OFFICE
TECHNOLOGY CENTER 2600

CANTOR COLBURN LLP-IBM YORKTOWN
20 Church Street
22nd Floor
Hartford CT 06103

In re Application of:
CO, RAYMOND L., et al.
Serial No.: 12/120,316
Filed: May 14, 2008

Title: **METHOD AND SYSTEM FOR IMPROVED SPEECH RECOGNITION**

DECISION ON PETITION TO MAKE SPECIAL FOR NEW APPLICATION UNDER 37 C.F.R. § 1.102 & M.P.E.P. § 708.02

This is a decision on the petition filed on May 14, 2008, to make the above-identified application special for accelerated examination procedure under 37 C.F.R. § 1.102(d).

The petition to make the application special is **DISMISSED**.

REGULATION AND PRACTICE

A grantable petition to make special under 37 C.F.R. § 1.102(d) and pursuant to the "Change to Practice for Petitions in Patent Applications to Make Special and for Accelerated Examination" published in the Federal Register on June 26, 2006 (71 Fed. Reg. 36323), must satisfy the following conditions:

I. Conditions Regarding the Application:

1. the application must be a non-reissue utility or design application filed under 37 CFR 1.111(a);
2. the application, the petition and the required fees must be filed electronically using the USPTO's electronic filing system (EFS), or EFS-web; if not filed electronically, a statement asserting that EFS and EFS-web were not available during the normal business hours.
3. at the time of filing, the application must be complete under 37 CFR 1.51 and in condition for examination;
4. the application must contain three or fewer independent claims and twenty or fewer total claims and the claims must be directed to a single invention.

II. Conditions Regarding the Petition:

The petition must:

1. be filed with the application;

2. include a statement that applicant agrees not to separately argue the patentability of any independent claim during any appeal in the application;

3. include a statement that applicant agrees to make an election without traverse in a telephone interview.

4. include a statement that applicant agrees to conduct such an interview when requested by the examiner.

5. include a statement, made based on a good faith belief, that a preexamination search in compliance with the following requirements, was conducted, including an identification of the filed of search by United States class and subclass, where applicable, and for database searches, the search logic or chemical structure or sequence used as a query, the name of the file(s) searched and the database service, and the date of the search.

The preexamination search must:

5.1 involve U.S. patents and patent application publications, foreign patent documents, and non-patent literature, unless the applicant can justify with reasonable certainty that no references more pertinent than those already identified are likely to be found in the eliminated sources and includes such a justification with this statement;

5.2. be directed to the claimed invention and encompass all of the features of the claims, giving the claims the broadest reasonable interpretation;

5.3. encompass the disclosed features that may be claimed.

6. must provide in support of the petition an accelerated examination support document. An accelerated examination support document must include:

6.1. an information disclosure statement (IDS) in compliance with 37 CFR 1.98 citing each reference deemed most closely related to the subject matter of each of the claims;

6.2. an identification of all the limitations in the claims that are disclosed by the reference specifying where the limitation is disclosed in the cited reference;

6.3. a detailed explanation of how each of the claims are patentable over the references cited with particularity required by 37 CFR 1.111(b) and (c);

6.4. a concise statement of the utility of the invention as defined in each of the independent claims (unless the application is a design application);

6.5. a showing of where each limitation of the claims finds support under 35 USC 112, first paragraph, in the written description of the specification. If applicable, the showing must also identify: (1) each means- (or step) plus-function claim element that invokes consideration under 35 USC 112, sixth paragraph; and (2) the structure, material, or acts in the specification that corresponds to each means- (or step) plus-function claim element that invokes consideration under 35 USC 112, sixth paragraph; if the application claims the benefit of one or more applications under title 35, United States Code, the showing must also include where each limitation of the claims finds support under 35 USC 112, first paragraph, in each such application in which such supports exists;

6.6. an identification of any cited references that may be disqualified under 35 USC 103(c).

REVIEW OF FACTS

The conditions set forth under section I. above are considered to have been met. However, the petition fails to comply with conditions set forth under section II. items 5.2 and 5.3.

For these reasons cited above, the petition fails to meet the required conditions to be accorded special status under the accelerated examination procedure.

Regarding the requirement in item 5.2 and 5.3 above, the preexamination search document provided with the instant petition is deficient as follows: The US field of search and database searches which are to be provided under section 8(A) are not sufficient. In addition to the search areas provided, applicant would also need to search in the following class/ subclasses: 704/236, 239 and 240.

If any request for reconsideration is filed, an updated preexamination search must be conducted as per items 5.2 and 5.3 above, and the Preexamination Search Document must be amended to indicate such; and the Accelerated Examination Support Document must also be amended to include the necessary reference and discussion of any newly found and cited prior art in accordance with all of items 6 through 6.6 above.

DECISION

For the above-stated reasons, the petition is **dismissed**. The application will therefore be taken up by the examiner for action in its regular turn.

Petitioner is given a single opportunity to perfect the petition. Any request for reconsideration of this decision must be submitted within 1 (one) month or 30 (thirty) days, whichever is longer, (no extension of time under 37 CFR 1.136(a)) from the date of this decision in order to be considered timely. Any request for reconsideration must address the deficiencies indicated above.

Petitioner is reminded that, upon granting of the special status of the application on request for reconsideration, the application will be processed expeditiously. However, due to the dismissal of the instant petition, examination may not be completed within twelve months of the filing date of the application.

Any inquiry regarding this decision should be directed to Ken Wieder, Quality Assurance Specialist, at (571) 272-2986.

Kenneth A. Wieder
Quality Assurance Specialist
Technology Center 2600
Communications

UNITED STATES PATENT AND TRADEMARK OFFICE

Commissioner for Patents
United States Patent and Trademark Office
P.O. Box 1450
Alexandria, VA 22313-1450
www.uspto.gov

MAIL

SEP 2 3 2008

DIRECTOR'S OFFICE
TECHNOLOGY CENTER 2600

CANTOR COLBURN LLP-IBM YORKTOWN
20 Church Street
22nd Floor
Hartford CT 06103

In re Application of:
CO, RAYMOND L., et al.
Serial No.: 12/120,316
Filed: May 14, 2008

Title: **METHOD AND SYSTEM FOR IMPROVED SPEECH RECOGNITION**

DECISION ON PETITION TO MAKE SPECIAL FOR NEW APPLICATION UNDER 37 C.F.R. § 1.102 & M.P.E.P. § 708.02

This is a decision on the petition filed on August 22, 2008 requesting reconsideration that the above-identified application be made special for accelerated examination procedure under 37 C.F.R. § 1.102(d).

The petition to make the application special is **GRANTED**.

The application is eligible for accelerated examination and the petition complies with the conditions for granting the application special status pursuant to the "Change to Practice for Petitions in Patent Applications to Make Special and for Accelerated Examination" published June 26, 2006, in the Federal Register. (71 Fed. Reg. 36323).

The prosecution of the instant application will be conducted expeditiously according to the following guidelines.

1. The application will be docketed to an examiner and taken up for action within two weeks of the date of this decision.

2. Restriction Practice:
   If the examiner determines that the claims are not directed to a single invention, a telephone request to elect one single invention will be made pursuant to MPEP 812.01. As a prerequisite to the grant of this petition, the applicant has agreed to make an oral election, by telephone, without traverse. If the applicant refuses to make an election without traverse, or the examiner cannot reach the applicant after a reasonable effort, the

examiner will treat the first claimed invention (invention defined by claim 1) as having being constructively elected without traverse for examination.

3. Office action:
If it is determined that, after appropriate consultation, there is a potential rejection or any other issue to be addressed, the examiner will telephone the applicant and arrange an interview to discuss and resolve the issue. An Office action, other than a Notice of Allowance and Fee(s) Due (Notice of Allowance), will not be issued unless either: 1) an interview was conducted but did not result in agreed to action that places the application in condition for allowance, or, 2) a determination is made that an interview would be unlikely to result in the application being placed in condition for allowance, and 3) an internal conference has been held to review any rejection of any claim.

4. Time for Reply:
An Office action other than a Notice of Allowance or a final Office action will set a shortened statutory period of one month or thirty days, whichever is longer, for reply with no extension of time available under 37 CFR 1.136(a). Failure to timely file a reply within this non-extendible period for reply will result in the abandonment of the application.

5. Reply by Applicant:
A timely reply to an Office action other than the Notice of Allowance must be submitted electronically via EFS or EFS-web and limited to addressing the rejections, objections and requirement made. Any amendment that attempts to: 1) add claims which would result in more than three pending independent claims or more than twenty pending total claims; 2) present claims not encompassed by the pre-examination search or an updated accelerated examination support document; or 3) present claims that are directed a non-elected invention or an invention other than that previously claimed and examined in the application, will be treated as not fully responsive and will not be entered.

   For any amendment to the claims (including any new claim) that is not encompassed by the accelerated examination support document, applicant must provide an updated accelerated examination support document that encompasses the amended or new claims at the time of filing of the amendment.

   To proceed expeditiously with the examination, it is recommended that a reply with amendments made to any claim or with any new claim being added be accompanied by an updated accelerated examination support document or a statement explaining how the amended or new claim is supported by the original accelerated examination support document.

6. Information Disclosure Statement (IDS):
Any IDS filed during prosecution must be submitted electronically via EFS or EFS-web, accompanied by an updated accelerated examination support document, and be in compliance with 37 CFR 1.97 and 1.98.

7. Post-Allowance Processing:
   To expedite processing of the allowed application into a patent, the applicant must: 1) pay the required fees within one month of the date of the Notice of Allowance, and 2) not file any post allowance papers not required by the Office. In no event may the issue fee be paid and accepted later than three months from the date of the Notice of Allowance.

8. After-Final and Appeal Procedures:
   To expedite prosecution, after receiving the final Office action, applicant must: 1) promptly file a notice of appeal, an appeal brief and appeal fees; and 2) not request a pre-appeal brief conference.

   Any amendment, affidavit or other evidence filed after final Office action must comply with applicable rules and the requirements outlined in numbered paragraphs 5 and 6 above.

   On appeal, the application will proceed according to normal appeal procedures. After appeal, the application will again be treated special.

9. Proceedings Outside the Normal Examination Process:
   If the application becomes involved in a proceeding that is outside the normal examination process (e.g., a secrecy order, national security review, interference proceeding, petitions under 37 CFR 1.181, 182 or 183), the application will be treated special before and after such proceeding.

10. Final Disposition:
    The twelve month goal of this accelerated examination procedure ends with a final disposition. The mailing of a final Office action, a Notice of Allowance, the filing of a Notice of Appeal, or the filing of a Request for Continued Examination (RCE) is the final disposition.

If, during prosecution, a paper is not filed electronically using EFS-web, a reply is filed but is not fully responsive, the application is involved in an appeal, or a proceeding outside normal examination process, the application will still be examined expeditiously, however, the final disposition may occur more than twelve months from the filing of the application.

Any inquiry regarding this decision should be directed to Ken Wieder, Quality Assurance Specialist, at (571) 272-2986.

Kenneth A. Wieder
Quality Assurance Specialist
Technology Center 2600
Communications

UNITED STATES PATENT AND TRADEMARK OFFICE

Commissioner for Patents
United States Patent and Trademark Office
P.O. Box 1450
Alexandria, VA 22313-1450
www.uspto.gov

MAILED

JUN 09 2010

OFFICE OF PETITIONS

STRIKER, STRIKER & STENBY
103 EAST NECK ROAD
HUNTINGTON, NY 11743

In re Application of	:	
John K. Junkers	:	
Application No. 12/120,346	:	DECISION GRANTING PETITION
Filed: May 14, 2008	:	UNDER 37 CFR 1.313(c)(2)
Attorney Docket No. 4368	:	

This is a decision on the petition under 37 CFR 1.313(c)(2), filed June 8, 2010, to withdraw the above-identified application from issue after payment of the issue fee.

The petition is **GRANTED**.

The above-identified application is withdrawn from issue for consideration of a submission under 37 CFR 1.114 (request for continued examination). *See* 37 CFR 1.313(c)(2).

Petitioner is advised that the issue fee paid on May 24, 2010 cannot be refunded. If, however, this application is again allowed, petitioner may request that it be applied towards the issue fee required by the new Notice of Allowance.[1]

Telephone inquiries regarding this decision should be directed to undersigned at (571) 272-1642. All other inquiries concerning the examination or status of this application should be directed to the Technology Center.

This application is being referred to Technology Center AU 3723 for processing of the request for continued examination under 37 CFR 1.114 and for consideration of the concurrently filed information disclosure statement.

/AMW/
April M. Wise
Petitions Examiner
Office of Petitions

---

[1] *The request to apply the issue fee to the new Notice may be satisfied by completing and returning the new Part B – Fee(s) Transmittal Form (along with any balance due at the time of submission). Petitioner is advised that the Issue Fee Transmittal Form must be completed and timely submitted to avoid abandonment of the application.*

UNITED STATES PATENT AND TRADEMARK OFFICE

UNITED STATES DEPARTMENT OF COMMERCE
United States Patent and Trademark Office
Address: COMMISSIONER FOR PATENTS
P.O. Box 1450
Alexandria, Virginia 22313-1450
www.uspto.gov

MARSH, FISCHMANN & BREYFOGLE LLP
8055 East Tufts Avenue
Suite 450
Denver, CO 80237

Mail Date: 06/18/2010

Applicant	: Brian Eugene Baldwin	: DECISION ON REQUEST FOR
Patent Number	: 7631475	: RECALCULATION of PATENT
Issue Date	: 12/15/2009	: TERM ADJUSTMENT IN VIEW
Application No	: 12/120,350	: OF WYETH AND NOTICE OF INTENT TO
Filed	: 05/14/2008	: ISSUE CERTIFICATE OF CORRECTION
		:

The Request for Recalculation is **GRANTED** to the extent indicated.

The patent term adjustment has been determined to be **0** days. The USPTO will *sua sponte* issue a certificate of correction reflecting the amount of PTA days determined by the recalculation.

Prior to the issuance of the certificate of correction, the USPTO will afford patentee an opportunity to be heard and request reconsideration. Accordingly, patentee has **one month or thirty (30) days**, whichever is longer, to file a request for reconsideration of this patent term adjustment calculation. See 35 U.S.C. 154(b)(3)(B)(ii) and 37 CFR 1.322(a)(4). No extensions of time will be granted under 37 CFR 1.136.

Patentee should use document code PET.OP if electronically filing a request for reconsideration of this patent term adjustment calculation. The patentee must also include the information required by 37 CFR 1.705(b)(2) and the fee required by 37 CFR 1.18(e). If patentee does not file a timely request for reconsideration of this patent term adjustment calculation including the information required by 37 CFR 1.705(b)(2) and the fee required by 37 CFR 1.18(e), the USPTO will issue a certificate of correction reflecting the PTA determination noted above.

Patentee should be aware that in order to preserve the right to review in the United States District Court for the District of Columbia of the USPTO patent term adjustment determination, patentee must ensure that he or she also take the steps required under 35 U.S.C. 154(b)(4)(A) in a timely manner. Nothing in the request for recalculation should be construed as providing an alternative time frame for commencing a civil action under 35 U.S.C. 154(b)(4)(A).

Any questions concerning this decision should be directed to the Office of Patent Legal Administration at 571-272-7702.

UNITED STATES PATENT AND TRADEMARK OFFICE

Commissioner for Patents
United States Patent and Trademark Office
P.O. Box 1450
Alexandria, VA 22313-1450
www.uspto.gov

TOWNSEND AND TOWNSEND AND CREW, LLP
TWO EMBARCADERO CENTER
EIGHTH FLOOR
SAN FRANCISCO, CA 94111-3834

COPY MAILED

MAR 1 7 2009

OFFICE OF PETITIONS

In re Application of	:	
Robert S. Kieval	:	
Application No. 12/120,356	:	DECISION ON PETITION
Filed: May 14, 2008	:	TO WITHDRAW
Attorney Docket No. 021433-002910US	:	FROM RECORD
	:	

This is a decision on the Request to Withdraw as attorney or agent of record under 37 C.F.R. § 1.36(b), filed February 13, 2009

The request is **APPROVED**.

A grantable request to withdraw as attorney/agent of record must be signed by every attorney/agent seeking to withdraw or contain a clear indication that one attorney is signing on behalf of another/others.

The request was signed by James M. Heslin on behalf of all attorneys of record who are associated with customer No. 20350. All attorneys/agents associated with the Customer Number 20350 have been withdrawn. Applicant is reminded that there is no attorney of record at this time.

The request to change the correspondence of record is not acceptable as the requested correspondence address is not that of: (1) the first named signing inventor; or (2) an intervening assignee of the entire interest under 37 C.F.R 3.71. All future communications from the Office will be directed to the assignee of the entire interest at the first copied address below until otherwise properly notified by the applicant.

There are no pending Office actions at the present time.

Telephone inquiries concerning this decision should be directed to undersigned at 571-272-1642. All other inquiries concerning the examination or status of this application should be directed to the Technology Center.

/AMW/
April M. Wise
Petitions Examiner
Office of Petitions

cc: CVRX, INC.
9201 WEST BROADWAY AVENUE
SUITE 650
MINNEAPOLIS, MN 55445

cc: PATTERSON, THUENTE, SKAAR
& CHRISTENSEN, PA
4800 IDS CENTER
80 SOUTH 8TH STREET
MINNEAPOLIS, MN 55402-2100

UNITED STATES PATENT AND TRADEMARK OFFICE

UNITED STATES DEPARTMENT OF COMMERCE
United States Patent and Trademark Office
Address: COMMISSIONER FOR PATENTS
P.O. Box 1450
Alexandria, Virginia 22313-1450
www.uspto.gov

APPLICATION NUMBER	FILING OR 371(C) DATE	FIRST NAMED APPLICANT	ATTY. DOCKET NO./TITLE
12/120,356	05/14/2008	Robert S. Kieval	021433-002910US

CONFIRMATION NO. 4797

POWER OF ATTORNEY NOTICE

20350
TOWNSEND AND TOWNSEND AND CREW, LLP
TWO EMBARCADERO CENTER
EIGHTH FLOOR
SAN FRANCISCO, CA 94111-3834

OC000000035015529

Date Mailed: 03/16/2009

NOTICE REGARDING CHANGE OF POWER OF ATTORNEY

This is in response to the Power of Attorney filed 02/13/2009.

- The withdrawal as attorney in this application has been accepted. Future correspondence will be mailed to the new address of record. 37 CFR 1.33.

/amwise/

Office of Data Management, Application Assistance Unit (571) 272-4000, or (571) 272-4200, or 1-888-786-0101

UNITED STATES PATENT AND TRADEMARK OFFICE

Commissioner for Patents
United States Patent and Trademark Office
P.O. Box 1450
Alexandria, VA 22313-1450
www.uspto.gov
DIW Aug-08

ROBERT PLOTKIN, PC
45 BUTTERNUT CIRCLE
CONCORD MA 01742-1937

COPY MAILED
AUG 22 2008

In re Application of	:	
James Scott Hiscock	:	
Application Number: 12/120377	:	ON PETITION
Filing Date: 05/14/2008	:	
Attorney Docket Number: 4089-US	:	

Receipt is acknowledged of the "PETITION FOR DATE OF DEPOSIT," filed on June 26, 2008, concerning the United States Patent and Trademark Office's handling of the above-referenced patent application.

The petition is dismissed.

The application was filed on May 14, 2008. However, on June 6, 2008, the Office of Patent Application Processing mailed a Notice of Omitted Item(s) in a Nonprovisional Application stating that the application had been accorded a filing date of May 14, 2008, and advising applicant that Figure 6 described in the specification appeared to have been omitted.

In response, on June 26, 2008, the present petition and response to the Notice of Omitted Item(s) in a Nonprovisional Application was filed. Petitioner explains that Figure 6 was not missing on May 14, 2008. Instead, petitioner asserts, Figure 6 described in the specification was intended to refer to Figures 6a, 6b, and 6c in the drawings as filed. Petitioner states that a preliminary amendment has been filed to correct the references in the specification to the drawing figures with the subject petition.

It is obvious from the petition that no drawing was actually missing on May 14, 2008. Rather, the reference to Figure 6 in the specification was the result of the applicant's filing error.

However, the Notice of Omitted Item(s) in a Nonprovisional Application mailed on June 6, 2008, was correct in stating that Figure 6 described in the specification appeared to have been omitted. Therefore, the "Notice" was properly mailed and will not be withdrawn.

As the present petition was not necessitated by an error on the part of the Office, the petition fee will not be refunded.

The application will be processed using only the application papers filed on May 14, 2008. The copy of the drawing sheets supplied with the present petition on June 26, 2008, will not be used for processing, but will be retained in the application file.

Receipt of the preliminary amendment is acknowledged. The preliminary amendment will be reviewed for new matter by the examiner in due course.

The application is being returned to the Office of Patent Application Processing for further processing with a filing date of May 14, 2008, using only the application papers filed on that date.

Telephone inquiries concerning this matter may be directed to the undersigned at (571) 272-3231.

D Wood

Douglas I. Wood
Senior Petitions Attorney
Office of Petitions

UNITED STATES PATENT AND TRADEMARK OFFICE

COMMISSIONER FOR PATENTS
UNITED STATES PATENT AND TRADEMARK OFFICE
P.O. BOX 1450
ALEXANDRIA, VA 22313-1450
www.uspto.gov

INGRASSIA FISHER & LORENZ, P.C.
7010 E. COCHISE ROAD
SCOTTSDALE AZ 85253

MAILED

APR 2 2 2009

OFFICE OF PETITIONS

Applicant: Bender
Appl. No.: 12/120,384
Filing Date: May 1, 2008
Title: BRAKE FLAP FOR AN AIRCRAFT
Attorney Docket: 078.0007USC1
Pub. No.: US 2008/0217484 A1
Pub. Date: September 11, 2008

This is a decision on the request for a corrected patent application publication under 37 CFR 1.221(b), received on October 17, 2008, for the above-identified application.

The request is DISMISSED.

Applicant requests that the application be republished because the patent application publication contains a material error, wherein Fig. 1 which was filed with the application was not included in the publication.

37 CFR 1.221 (b) is applicable "only when the Office makes a material mistake which is apparent from Office records. Any request for a corrected publication or revised patent application publication other than provided as provided in paragraph (a) of this section must be filed within two months from the date of the patent application publication. This period is not extendable." A material mistake must affect the public's ability to appreciate the technical disclosure of the patent application publication, to determine the scope of the patent application publication, or to determine the scope of the provisional rights that an applicant may seek to enforce upon issuance of a patent. [1]

The omission of Figure 1, may be an Office error, but it is not a material Office error under 37 CFR 1.221. The omission of Figure 1, which is labeled prior art does not affect the understanding of the application. The mistake does not affect the public's ability to appreciate the technical disclosure of the patent application publication, or determine the scope of the patent application publication or determine the scope of the provisional rights that an applicant may seek to enforce upon issuance of a patent.

It would greatly benefit the Office if **applicant did not provide copies of papers**, which were previously submitted and/or **a complete copy of the pre-grant publication**, as it unnecessarily

[1] Changes to Implement Eighteen-Month Publication of Patent Applications, 65 FR 57023, 57038 (Sept. 20, 2000), 1239, Off. Gaz. Pat. Office Notices 63, 75 (Oct. 10, 2000) (final rule).

increases the cost to the Office. See 37 CFR 1.4(b). A request for corrected publication need only point out what was printed incorrectly in the application, where the error occurs in the publication and where the correct text or drawing is found in the application papers. Marked up relevant copies of the applications papers and the pre-grant publication may facilitate processing of the request, where it is not readily apparent where the error occurs. If it is not clear why the error is a material error, further explanation may be warranted.

The applicant is advised that a "request for republication of an application previously published" may be filed under 37 CFR 1.221 (a). Such a request for republication "must include a copy of the application compliance with the Office's electronic filing system requirements and be accompanied by the publication fee set forth in § 1.18 (d) and the processing fee set forth in § 1.17 (i)." If the request for republication does not comply with the electronic filing system requirements, the republication will not take place and the publication fee set forth in § 1.18 (d) will be refunded. The processing fee will be retained.

A guide for filing a request for a Pre-Grant Publication, such as a request for republication, may be found on the link below:

http://www.uspto.gov/ebc/portal/tutorials.htm

Any request for republication under 37 CFR 1.221(a), must be submitted via the EFS system, as a "Pre-Grant Publication" and questions or request for reconsideration of the decision, should be addressed as follows:

By mail to: Mail Stop PGPUB
Commissioner for Patents
P.O. Box 1450
Alexandria, Va. 22313-1450

Inquiries relating to this matter may be directed to Mark Polutta at (571) 272-7709.

Mark Polutta
Senior Legal Advisor
Office of Patent Legal Administration
Office of the Deputy Commissioner
for Patent Examination Policy

UNITED STATES PATENT AND TRADEMARK OFFICE

Commissioner for Patents
United States Patent and Trademark Office
P.O. Box 1450
Alexandria, VA 22313-1450
www.uspto.gov

Paper No.

QUARLES & BRADY LLP
411 E. WISCONSIN AVENUE
SUITE 2040
MILWAUKEE WI 53202-4497

MAILED

FEB 17 2009

OFFICE OF PETITIONS

In re Application of
Andrew L. Flaherty et al.
Application No. 12/120,473
Filed: May 14, 2008
Attorney Docket No.:
790063.00211
Title: CERAMIC BRUSH SEALS

DECISION ON PETITION UNDER
37 C.F.R. §1.59(b)

This is a decision on the "PETITION TO REMOVE DUPLICATE EFS SUBMISSION," filed December 9, 2008, requesting the expungement of a preveniently submitted five-page information disclosure statement (IDS). This submission is being treated as a petition pursuant to 37 C.F.R. § 1.59(b)

The petition is **GRANTED**.

The application was filed on May 14, 2008, along with an IDS. On December 1, 2008, Petitioner submitted a Supplemental IDS. Petitioner has set forth that this supplemental IDS was erroneously filed twice in the present application on this date, and has requested the expungement of the duplicate submission, which is associated with EFS ID 4374625.

37 C.F.R. §1.59 sets forth, *in toto*:

> (a)
> (1) Information in an application will not be expunged, except as provided in paragraph (b) of this section or § 41.7(a) of this title.
> (2) Information forming part of the original disclosure (i.e., written specification including the claims, drawings, and any

preliminary amendment specifically incorporated into an executed oath or declaration under §§ 1.63 and 1.175) will not be expunged from the application file.
(b) An applicant may request that the Office expunge information, other than what is excluded by paragraph (a)(2) of this section, by filing a petition under this paragraph. Any petition to expunge information from an application must include the fee set forth in § 1.17(g) and establish to the satisfaction of the Director that the expungement of the information is appropriate in which case a notice granting the petition for expungement will be provided.
(c) Upon request by an applicant and payment of the fee specified in § 1.19(b), the Office will furnish copies of an application, unless the application has been disposed of (see §§ 1.53(e), (f) and (g)). The Office cannot provide or certify copies of an application that has been disposed of.

[48 FR 2710, Jan. 20, 1983, effective Feb. 27, 1983; 49 FR 554, Jan. 4, 1984, effective Apr. 1, 1984; 49 FR 48416, Dec. 12, 1984, effective Feb. 11, 1985; 50 FR 23123, May 31, 1985, effective Feb. 11, 1985; revised, 60 FR 20195, Apr. 25, 1995, effective June 8, 1995; revised, 62 FR 53131, Oct. 10, 1997, effective Dec. 1, 1997; para. (b) revised, 65 FR 54604, Sept. 8, 2000, effective Nov. 7, 2000; para. (b) revised, 68 FR 14332, Mar. 25, 2003, effective May 1, 2003; revised, 68 FR 38611, June 30, 2003, effective July 30, 2003; para. (a)(1) revised, 69 FR 49959, Aug. 12, 2004, effective Sept. 13, 2004; para. (b) revised, 69 FR 56481, Sept. 21, 2004, effective Nov. 22, 2004]

The matter Petitioner wishes to have expunged does not form part of the original disclosure. Petitioner has established to the satisfaction of the Director that the expungement of this information is appropriate.

The $200 petition fee will be charted to Petitioner's Deposit Account in due course, as authorized in this petition.

As such, the electronic document that contains these five pages, along with the two-page Electronic Acknowledgement Receipt containing an EFS ID of 4374625, has been closed in the Office's Image File Wrapper software viewing program. The copy of this duplicate submission that was filed concurrently with this petition will remain viewable in the electronic file.

It is noted that the address listed on the petition differs slightly from the address of record. The application file does not indicate a change of correspondence address has been filed in this case, although the address given on the petition differs from the address of record. If Petitioner desires to receive future correspondence regarding this application, the change of correspondence address must be submitted. A courtesy copy of this decision will be mailed to Petitioner. However, all future correspondence will be directed to the address of record until

such time as appropriate instructions are received to the contrary. Petitioner will not receive future correspondence related to this application unless Change of Correspondence Address, Patent Form (PTO/SB/122) is submitted for the above-identified application. For Petitioner's convenience, a blank Change of Correspondence Address, Patent Form (PTO/SB/122), may be found at http://www.uspto.gov/web/forms/sb0122.pdf.

The Technology Center will be notified of this decision. The Technology Center's support staff will notify the Examiner of this decision, so that the present application can receive further processing in due course.

Telephone inquiries regarding *this decision* should be directed to the undersigned at (571) 272-3225[1]. All other inquiries concerning examination procedures or status of the application should be directed to the Technology Center.

/Paul Shanoski/
Paul Shanoski
Senior Attorney
Office of Petitions

cc: QUARLES & BRADY LLP
411 E. WISCONSIN AVENUE
SUITE 2040
MILWAUKEE WI 53202-4497

---

1 Petitioner will note that all practice before the Office should be in writing, and the action of the Office will be based exclusively on the written record in the Office. See 37 C.F.R. § 1.2. As such, Petitioner is reminded that no telephone discussion may be controlling or considered authority for any further action(s) of Petitioner.

UNITED STATES PATENT AND TRADEMARK OFFICE

Commissioner for Patents
United States Patent and Trademark Office
P.O. Box 1450
Alexandria, VA 22313-1450
www.uspto.gov

ROSSI KIMMS & MCDOWELL LLP
20609 GORDON PARK SQUARE, SUITE 150
ASHBURN, VA 20147

MAILED

JUL 27 2010

OFFICE OF PETITIONS

In re Application of :
Michio Nemoto :
Application No. 12/120,493 :
Filed: May 14, 2008 :
Attorney Docket No. FUJI-0485 :

ON PETITION

This is a decision on the petition filed June 30, 2010 under 37 CFR 1.137(b), to revive the above-identified application.

The petition is **GRANTED.**

The above-identified application became abandoned for failure to submit the Issue fee and Publication Fee in a timely manner in reply to the Notice of Allowance mailed March 10, 2010, which set a statutory period for reply of three (3) months. Accordingly, the above-identified application became abandoned on June 11, 2010.

The petition satisfies the conditions for revival pursuant to the provisions of 37 CFR 1.137(b) in that (1) the reply in the form of payment of the Issue fee and Publication Fee; (2) the petition fee; (3) the required statement of unintentional delay have been received. Accordingly, the issue fee is accepted as having been unintentionally delayed.

Telephone inquiries concerning this decision should be directed to the undersigned at (571) 272-3210.

This matter is being referred to the Office of Data Management for further processing.

Irvin Dingle
Petitions Examiner
Office of Petitions

UNITED STATES PATENT AND TRADEMARK OFFICE

Commissioner for Patents
United States Patent and Trademark Office
P.O. Box 1450
Alexandria, VA 22313-1450
www.uspto.gov

AMSTER, ROTHSTEIN & EBENSTEIN LLP
90 PARK AVENUE
NEW YORK NY 10016

COPY MAILED

JUN 23 2008

OFFICE OF PETITIONS

In re Application of

PHILIP R. MCKEE et al.
Application No. 12/120,497
Filed: May 14, 2008
Attorney Docket No. **68925-16**

DECISION ON PETITION
TO MAKE SPECIAL UNDER
37 CFR 1.102(c)(1)

This is a decision on the petition under 37 CFR 1.102(c)(1), filed May 14, 2008, to make the above-identified application special based on applicant's age as set forth in M.P.E.P. § 708.02, Section IV.

The petition is **GRANTED**.

A grantable petition to make an application special under 37 CFR 1.102(c)(1) and MPEP § 708.02, Section IV: Applicant's Age must be accompanied by evidence showing that at least one of the applicants is 65 years of age, or more, such as a birth certificate or a statement by applicant. No fee is required

The instant petition includes a statement by Earl R. Winkelmann attesting to his age. Accordingly, the above-identified application has been accorded "special" status.

Telephone inquiries concerning this decision should be directed to Tredelle Jackson at 571-272-2783.

All other inquiries concerning either the examination or status of the application should be directed to the Technology Center.

The application is being forwarded to the Technology Center Art Unit 3742 for action on the merits commensurate with this decision.

Tredelle D. Jackson
Paralegal Specialist
Office of Petitions

UNITED STATES PATENT AND TRADEMARK OFFICE

Commissioner for Patents
United States Patent and Trademark Office
P.O. Box 1450
Alexandria, VA 22313-1450
www.uspto.gov

CORDTS AND GULLEY, PLLC
6283 POPLAR AVENUE
SUITE 1132
MEMPHIS TN 38119

MAILED

APR 12 2010

OFFICE OF PETITIONS

In re Application of	:	
Argo, Ethan Adam	:	
Application No. 12/120,542	:	DECISION ON PETITION
Filed: May 14, 2008	:	
Attorney Docket No. 2007CG0842	:	

This is a decision on the petition, filed February 15, 2010, which is being treated as a petition under 37 CFR 1.181, requesting withdrawal of the holding of abandonment in the above-identified application.

The petition is **DISMISSED**.

This application was held abandoned for failure to timely respond to the Office action of June 9, 2009, which set a three (3) month shortened statutory period for reply. Accordingly, a reply was due on or before September 9, 2009. A Notice of Abandonment was mailed on December 15, 2009.

Petitioner states that a timely reply was electronically submitted on December 9, 2009, which included an Amendment, and generated an Electronic Acknowledgement Receipt with the EFS ID number of 6603180. A review of the application file shows receipt of the reply on December 9, 2009. However, for the reply to have been timely on that date, a three (3) month extension of time was needed. A review of USPTO financial records fails to indicate receipt of the extension of time. Accordingly, the application was properly abandoned.

ALTERNATIVE VENUE

Petitioner is strongly encouraged to consider filing a petition under 37 CFR 1.137(b) to revive an unintentionally abandoned application instead of filing a renewed petition under 37 CFR 1.181 or a petition under 37 CFR 1.137(a).

A grantable petition pursuant to 37 CFR 1.137(b) must be accompanied by:

> (1) The reply required to the outstanding Office action or notice, unless previously filed. In nonprovisional utility application abandoned for failure to respond to a non-final Office action, the required reply may be met by filing either (A) an argument or amendment under 37 CFR 1.111 or (B) a continuing application under 37 CFR 1.53(b).

(2) The petition fee as set forth in 37 CFR 1.17(m), **$810.00 for a small entity**;

(3) A statement that the entire delay in filing the required reply from the due date for the reply until the filing of a grantable petition was unintentional. The Director may require additional information where there is a question whether the delay was unintentional.

Petitioner may wish to consider hiring a registered patent attorney or agent to assist in the prosecution of this application. Additionally, petitioner is encouraged to contact the Inventors Assistance Center (IAC) by telephone at 800-786-9199 or 571-272-1000, Monday through Friday from 8:30 AM to 5:30 PM (EST). The IAC provides patent information and services to the public and is staffed by former Supervisory Patent Examiners and experienced Primary Examiners who answer general questions concerning patent examining policy and procedure.

Further correspondence with respect to this matter should be addressed as follows:

By mail: Mail Stop PETITIONS
Commissioner for Patents
Post Office Box 1450
Alexandria, VA 22313-1450

By hand: Customer Service Window
Mail Stop Petitions
Randolph Building
401 Dulany Street
Alexandria, VA 22314

By fax: (571) 273-8300
ATTN: Office of Petitions

Any questions concerning this matter may be directed to the undersigned at (571) 272-

Liana Walsh
Petitions Examiner
Office of Petitions

UNITED STATES PATENT AND TRADEMARK OFFICE

Commissioner for Patents
United States Patent and Trademark Office
P.O. Box 1450
Alexandria, VA 22313-1450
www.uspto.gov

CORDTS AND GULLEY, PLLC
6283 POPLAR AVENUE
SUITE 1132
MEMPHIS TN 38119

MAILED

JUN 04 2010

OFFICE OF PETITIONS

In re Application of	:	
Argo, Ethan Adam	:	
Application No. 12/120,542	:	ON PETITION
Filed: May 14, 2008	:	
Attorney Docket No. 2007CG0842	:	

This is a decision on the petition under 37 C.F.R. § 1.137(b), filed April 30, 2010, to revive the above-identified application.

The petition is **GRANTED**.

The petition satisfies the requirements of 37 CFR 1.137(b) in that petitioner has supplied (1) the reply in the form of an Amendment (previously filed December 9, 2009), (2) the petition fee, and (3) a proper statement of unintentional delay.

Telephone inquiries concerning this decision should be directed to the undersigned at (571) 272-3206.

This matter is being referred to Technology Center AU 3644 for further examination on the merits.

Liana Walsh
Petitions Examiner
Office of Petitions

UNITED STATES PATENT AND TRADEMARK OFFICE

UNITED STATES DEPARTMENT OF COMMERCE
United States Patent and Trademark Office
Address: COMMISSIONER FOR PATENTS
P.O. Box 1450
Alexandria, Virginia 22313-1450
www.uspto.gov

APPLICATION NO.	FILING DATE	FIRST NAMED INVENTOR	ATTORNEY DOCKET NO.	CONFIRMATION NO.
12/120,561	05/14/2008	Richard J. Swan	13909-072002	5237

7590 03/18/2009
FISH & RICHARDSON, P.C.
PO BOX 1022
MINNEAPOLIS, MN 55440-1022

EXAMINER
SERRAO, RANODHI N

ART UNIT	PAPER NUMBER
2441	

NOTIFICATION DATE	DELIVERY MODE
03/18/2009	ELECTRONIC

DECISION GRANTING PETITION UNDER 37 CFR 1.138(d)

The declaration of express abandonment is recognized

This is in response to the petition under 37 CFR 1.138(d), requesting for a refund of any previously paid search fee and excess claims fee in the above-identified application.

The petition is granted.

The express abandonment is recognized. Any previously paid search fee and excess claims fee are hereby refunded.

Telephone inquiries should be directed to the Office of Data Management at (571) 272-4200.

Betty Powell

Patent Publication Branch
Office of Data Management

Adjustment Date: 03/17/2009 BPOWELL
05/15/2008 INTEFSW 00000574 061050 12120561
02 FC:1111 510.00 CR
04 FC:1202 50.00 CR

Adjustment date: 03/17/2009 BPOWELL
05/15/2008 INTEFSW 00000574 061050 12120561
02 FC:1111 510.00 CR
04 FC:1202 50.00 CR

FORM PET651G (Rev. 08/07)

UNITED STATES PATENT AND TRADEMARK OFFICE

UNITED STATES DEPARTMENT OF COMMERCE
United States Patent and Trademark Office
Address: COMMISSIONER FOR PATENTS
P.O. Box 1450
Alexandria, Virginia 22313-1450
www.uspto.gov

APPLICATION NO.	FILING DATE	FIRST NAMED INVENTOR	ATTORNEY DOCKET NO.	CONFIRMATION NO.
12/120,570	05/14/2008	Emiko Nakagawa	326390US2S	5255

7590 05/03/2010
OBLON, SPIVAK, MCCLELLAND MAIER & NEUSTADT, L.L.P.
1940 DUKE STREET
ALEXANDRIA, VA 22314

EXAMINER
WILSON, LEE D

ART UNIT	PAPER NUMBER
3727	

NOTIFICATION DATE	DELIVERY MODE
05/03/2010	ELECTRONIC

DECISION GRANTING PETITION UNDER 37 CFR 1.138(d)

The declaration of express abandonment is recognized

This is in response to the petition under 37 CFR 1.138(d), requesting for a refund of any previously paid search fee and excess claims fee in the above-identified application.

The petition is granted.

The express abandonment is recognized. Any previously paid search fee and excess claims fee are hereby refunded.

Telephone inquiries should be directed to the Office of Data Management at (571) 272-4200.

Patent Publication Branch
Office of Data Management

Refund Ref:
05/03/2010 [illegible]

Credit Card Refund Total: $510.00

Adjustment date: 05/03/2010 NFARMER
05/15/2008 INTEF50 [illegible]
02 FC:1111 -510.00 OP

FORM PET651G (Rev. 08/07)

UNITED STATES PATENT AND TRADEMARK OFFICE

UNITED STATES DEPARTMENT OF COMMERCE
United States Patent and Trademark Office
Address: COMMISSIONER FOR PATENTS
P.O. Box 1450
Alexandria, Virginia 22313-1450
www.uspto.gov

SONNENSCHEIN NATH & ROSENTHAL LLP
P.O. BOX 061080
WACKER DRIVE STATION, WILLIS TOWER
CHICAGO, IL 60606-1080

Mail Date: 04/27/2010

Applicant	: Ulrich Heiser	: DECISION ON REQUEST FOR
Patent Number	: 7625939	: RECALCULATION of PATENT
Issue Date	: 12/01/2009	: TERM ADJUSTMENT IN VIEW
Application No	: 12/120,595	: OF WYETH AND NOTICE OF INTENT TO
Filed	: 05/14/2008	: ISSUE CERTIFICATE OF CORRECTION
		:

The Request for Recalculation is **GRANTED** to the extent indicated.

The patent term adjustment has been determined to be **0** days. The USPTO will *sua sponte* issue a certificate of correction reflecting the amount of PTA days determined by the recalculation.

Prior to the issuance of the certificate of correction, the USPTO will afford patentee an opportunity to be heard and request reconsideration. Accordingly, patentee has **one month or thirty (30) days**, whichever is longer, to file a request for reconsideration of this patent term adjustment calculation. See 35 U.S.C. 154(b)(3)(B)(ii) and 37 CFR 1.322(a)(4). No extensions of time will be granted under 37 CFR 1.136.

Patentee should use document code PET.OP if electronically filing a request for reconsideration of this patent term adjustment calculation. The patentee must also include the information required by 37 CFR 1.705(b)(2) and the fee required by 37 CFR 1.18(e). If patentee does not file a timely request for reconsideration of this patent term adjustment calculation including the information required by 37 CFR 1.705(b)(2) and the fee required by 37 CFR 1.18(e), the USPTO will issue a certificate of correction reflecting the PTA determination noted above.

Patentee should be aware that in order to preserve the right to review in the United States District Court for the District of Columbia of the USPTO patent term adjustment determination, patentee must ensure that he or she also take the steps required under 35 U.S.C. 154(b)(4)(A) in a timely manner. Nothing in the request for recalculation should be construed as providing an alternative time frame for commencing a civil action under 35 U.S.C. 154(b)(4)(A).

Any questions concerning this decision should be directed to the Office of Patent Legal Administration at 571-272-7702.

UNITED STATES PATENT AND TRADEMARK OFFICE

COMMISSIONER FOR PATENTS
UNITED STATES PATENT AND TRADEMARK OFFICE
P.O. BOX 1450
ALEXANDRIA, VA 22313-1450

PEPPER HAMILTON LLP
400 BERWYN PARK
899 CASSATT ROAD
BERWYN PA 19312-1183

MAILED

JUN 0 9 2009

OFFICE OF PETITIONS

Applicant: Burrows, et al.
Appl. No.: 12/120,608
Filing Date: May 14, 2008
Title: NEW COMPOUNDS 835
Attorney Docket No.: 133087.23401(102835-2 US)
Pub. No.: US 2008/0287460 A1
Pub. Date: November 20, 2008

This is a decision on the request for a corrected patent application publication under 37 CFR 1.221(b), received on January 8, 2009, for the above-identified application.

Applicant requests that the application be republished because the patent application publication contains material errors in claim 1, wherein 2 of the compounds are not shown correctly.

The request is granted.

The corrected patent application publication will be published in due course, unless the patent issues before the application is republished.

Inquiries relating to this matter may be directed to Mark O. Polutta at (571) 272-7709.

Mark Polutta
Senior Legal Advisor
Office of Patent Legal Administration
Office of the Deputy Commissioner
for Patent Examination Policy

UNITED STATES PATENT AND TRADEMARK OFFICE

Commissioner for Patents
United States Patent and Trademark Office
P.O. Box 1450
Alexandria, VA 22313-1450
www.uspto.gov

PAUL D. YASGER
ABBOTT LABORATORIES
100 ABBOTT PARK ROAD
DEPT. 377/AP6A
ABBOTT PARK IL 60064-6008

MAILED

JUN 24 2009

OFFICE OF PETITIONS

In re Application of
DeVries, et al.
Application No. 12/120,627
Filed: May 14, 2008
Attorney Docket No. 6989USD1
For: ERYTHROPOIETIN RECEPTOR BINDING ANTIBODIES

ON PETITION

This is a decision on the petition under 37 CFR 1.137(b), filed May 12, 2009 and supplemented on May 20, 2009, to revive the above-identified application.

The petition under 37 CFR 1.137(b) is **GRANTED**.

This application became abandoned for failure to timely reply to the Notice to File Corrected Application Papers, mailed June 2, 2008, which set a two month shortened statutory period for reply. No extensions of time having been obtained pursuant to 37 CFR 1.136(a) and no reply being received in the Office, this application became abandoned on August 3, 2008. A Notice of Abandonment was mailed on February 10, 2009.

Applicants have submitted a proper reply to the June 2, 2008 Notice in the form of replacement drawings, a paper/compact disc copy of a sequence listing and an amendment specifically directing its entry into the application, and a statement that the content of the sequence listing information recorded in the computer readable form is identical to the written (on paper or compact disc) sequence listing; an acceptable statement of the unintentional nature of the delay in responding to the June 2, 2008 Notice, and the $1,620.00 petition fee. Accordingly, the petition under 37 CFR 1.137(b) is granted.

After the mailing of this decision, the file will be returned to the Office of Patent Application Processing for further pre-examination processing.

Telephone inquiries concerning this matter may be directed to the undersigned at (571) 272-3230.

Shirene Willis Brantley

Shirene Willis Brantley
Senior Petitions Attorney
Office of Petitions

UNITED STATES PATENT AND TRADEMARK OFFICE

Commissioner for Patents
United States Patent and Trademark Office
P.O. Box 1450
Alexandria, VA 22313-1450
www.uspto.gov

In re Application of :
Robert D. Kodis :

Application No. 12120643 :DECISION ON PETITION TO MAKE SPECIAL
Filed: :UNDER 37 CFR 1.102(c)(1)
:

Attorney Docket No. INK-001.01

This is a decision on the electronic petition under 37 CFR 1.102 (c)(1) ,filed 15-MAY-2008 to make the above-identified application special based on applicant's age as set forth in MPEP § 708.02, Section IV.

The petition is **GRANTED**.

A grantable petition to make an application special under 37 CFR 1.102(c)(1), MPEP § 708.02, Section IV: Applicant's Age must include a statement by applicant or a registered practitioner having evidence that applicant is at least 65 years of age. No fee is required.

Accordingly, the above-identified application has been accorded “special” status and will be taken up for action by the examiner upon the completion of all pre-examination processing.

Telephone inquires concerning this electronic decision should be directed to the Electronic Business Center at 866-217-9197.

All other inquires concerning either the examination or status of the application should be directed to the Technology Center.

PTO/SB/130 (03-08)
Approved for use through 05/31/2008. OMB 0651- 0031
U.S. Patent and Trademark Office; U.S. DEPARTMENT OF COMMERCE
Under the Paperwork Reduction Act of 1995, no persons are required to respond to a collection of information unless it contains a valid OMB control number

PETITION TO MAKE SPECIAL BASED ON AGE FOR ADVANCEMENT OF EXAMINATION UNDER 37 CFR 1.102(c)(1)

Application Information

Application Number	12120643	Confirmation Number	5389	Filing Date	2008-05-14
Attorney Docket Number (optional)	INK-001.01	Art Unit		Examiner	
First Named Inventor	KODIS, Robert D.				
Title of Invention	WASTE PROCESSING FOR PATHOGEN REDUCTION				

Attention: Office of Petitions

An application may be made special for advancement of examination upon filing of a petition showing that the applicant is 65 years of age, or more. No fee is required with such a petition. See 37 CFR 1.102(c)(1) and MPEP 708.02 (IV).

APPLICANT HEREBY PETITIONS TO MAKE SPECIAL FOR ADVANCEMENT OF EXAMINATION IN THIS APPLICATION UNDER 37 CFR 1.102(c)(1) and MPEP 708.02 (IV) ON THE BASIS OF THE APPLICANT'S AGE.

A grantable petition requires one of the following items:
(1) Statement by one named inventor in the application that he/she is 65 years of age, or more; or
(2) Certification by a registered attorney/agent having evidence such as a birth certificate, passport, driver's license, etc. showing one named inventor in the application is 65 years of age, or more.

Name of Inventor who is 65 years of age, or older

Given Name	Middle Name	Family Name	Suffix
Robet	D.	Kodis	

A signature of the applicant or representative is required in accordance with 37 CFR 1.33 and 10.18.
Please see 37 CFR 1.4(d) for the format of the signature.

Select (1) or (2) :

○ (1) I am an inventor in this application and I am 65 years of age, or more.

◉ (2) I am an attorney or agent registered to practice before the Patent and Trademark Office, and I certify that I am in possession of evidence, and will retain such in the application file record, showing that the inventor listed above is 65 years of age, or more.

Signature	/SCOTT E. KAMHOLZ/	Date (YYYY-MM-DD)	2008-05-14
Name	Scott E. Kamholz	Registration Number	48543

PTO/SB/130 (03-08)
Approved for use through 05/31/2008. OMB 0651- 0031
U.S. Patent and Trademark Office; U.S. DEPARTMENT OF COMMERCE
Under the Paperwork Reduction Act of 1995, no persons are required to respond to a collection of information unless it contains a valid OMB control number

Privacy Act Statement

The Privacy Act of 1974 (P.L. 93-579) requires that you be given certain information in connection with your submission of the attached form related to a patent application or patent. Accordingly, pursuant to the requirements of the Act, please be advised that: (1) the general authority for the collection of this information is 35 U.S.C. 2(b)(2); (2) furnishing of the information solicited is voluntary; and (3) the principal purpose for which the information is used by the U.S. Patent and Trademark Office is to process and/or examine your submission related to a patent application or patent. If you do not furnish the requested information, the U.S. Patent and Trademark Office may not be able to process and/or examine your submission, which may result in termination of proceedings or abandonment of the application or expiration of the patent.

The information provided by you in this form will be subject to the following routine uses:

1. The information on this form will be treated confidentially to the extent allowed under the Freedom of Information Act (5 U.S.C. 552) and the Privacy Act (5 U.S.C. 552a). Records from this system of records may be disclosed to the Department of Justice to determine whether the Fr eedom of Information Act requires disclosure of these records.

2. A record from this system of records may be disclosed, as a routine use, in the course of presenting evidence to a court, magistrate, or administrative tribunal, including disclosures to opposing counsel in the course of settlement negotiations.

3. A record in this system of records may be disclosed, as a routine use, to a Member of Congress submitting a request involving an individual, to whom the record pertains, when the individual has requested assistance from the Member with respect to the subject matter of the record.

4. A record in this system of records may be disclosed, as a routine use, to a contractor of the Agency having need for the information in order to perform a contract. Recipients of information shall be required to comply with the requirements of the Privacy Act of 1974, as amended, pursuant to 5 U.S.C. 552a(m).

5. A record related to an International Application filed under the Patent Cooperation Treaty in this system of records may be disclosed, as a routine use, to the International Bureau of the World Intellectual Property Organization, pursuant to the Patent Cooperation Treaty.

6. A record in this system of records may be disclosed, as a routine use, to another federal agency for purposes of National Security review (35 U.S.C. 181) and for review pursuant to the Atomic Energy Act (42 U.S.C. 218(c)).

7. A record from this system of records may be disclosed, as a routine use, to the Administrator, General Services, or his/her designee, during an inspection of records conducted by GSA as part of that agency's responsibility to recommend improvements in records management practices and programs, under authority of 44 U.S.C. 2904 and 2906. Such disclosure shall be made in accordance with the GSA regulations governing inspection of records for this purpose, and any other relevant (i.e., GSA or Commerce) directive. Such disclosure shall not be used to make determinations about indivi duals.

8. A record from this system of records may be disclosed, as a routine use, to the public after either publication of the application pursuant to 35 U.S.C. 122(b) or issuance of a patent pursuant to 35 U.S.C. 151. Further, a record may be disclosed, subject to the limitations of 37 CFR 1.14, as a routine use, to the public if the record was filed in an application which became abandoned or in which the proceedings were terminated and which application is referenced by either a published application, an application open to public inspections or an issued patent.

9. A record from this system of records may be disclosed, as a routine use, to a Federal, State, or local law enforcement agency, if the USPTO becomes aware of a violation or potential violation of law or regulation.

UNITED STATES PATENT AND TRADEMARK OFFICE

UNITED STATES DEPARTMENT OF COMMERCE
United States Patent and Trademark Office
Address: COMMISSIONER FOR PATENTS
P.O. Box 1450
Alexandria, Virginia 22313-1450
www.uspto.gov

APPLICATION NO.	FILING DATE	FIRST NAMED INVENTOR	ATTORNEY DOCKET NO.	CONFIRMATION NO.
12/120,666	05/15/2008	Angqin Bai	TUC920070176US1	5438

59425 7590 06/20/2008
CANTOR COLBURN LLP - IBM TUSCON DIVISION
20 Church Street
22nd Floor
Hartford, CT 06103

EXAMINER	
ART UNIT	PAPER NUMBER
3623	

MAIL DATE	DELIVERY MODE
06/20/2008	PAPER

Please find below and/or attached an Office communication concerning this application or proceeding.

The time period for reply, if any, is set in the attached communication.

UNITED STATES PATENT AND TRADEMARK OFFICE

Commissioner for Patents
United States Patent and Trademark Office
P.O. Box 1450
Alexandria, VA 22313-1450
www.uspto.gov

MAILED
FROM DIRECTORS OFFICE

CANTOR COLBURN LLP - IBM TUSCON DIVIDION
20 CHURCH STREET
22nd FLOOR
HARTFORD, CT 06103

JUN 19 2008

TECHNOLOGY CENTER 3600

In re application of
Bai et al.
Application No. 12/120,666
Filed: May 15, 2008
For: SYSTEMS, METHODS AND COMPUTER PRODUCTS FOR PROVIDING TAPE LIBRARY DYNAMIC PRICE PERFORMANCE ENHANCEMENT FEATURE

: **DECISION ON PETITION**
: **TO MAKE SPECIAL FOR**
: **NEW APPLICATION**
: **UNDER 37 CFR 1.102**

This is a decision on the petition filed on May 15, 2008 to make the above-identified application special for accelerated examination procedure under 37 C.F.R. § 1.102(d).

The petition to make the application special is **GRANTED**.

The application is eligible for accelerated examination and the petition complies with the conditions for granting the application special status pursuant to the "Change to Practice for Petitions in Patent Applications to Make Special and for Accelerated Examination" published June 26, 2006, in the Federal Register. (71 Fed. Reg. 36323).

The prosecution of the instant application will be conducted expeditiously according to the following guidelines.

1. The application will be docketed to an examiner and taken up for action within two weeks of the date of this decision.

2. Restriction Practice:
If the examiner determines that the claims are not directed to a single invention, a telephone request to elect one single invention will be made pursuant to MPEP 812.01. As a prerequisite to the grant of this petition, the applicant has agreed to make an oral election, by telephone, without traverse. If the applicant refuses to make an election without traverse, or the examiner cannot reach

the applicant after a reasonable effort, the examiner will treat the first claimed invention (invention defined by claim 1) as having being constructively elected without traverse for examination.

3. Office action:
   If it is determined that, after appropriate consultation, there is a potential rejection or any other issue to be addressed, the examiner will telephone the applicant and arrange an interview to discuss and resolve the issue. An Office action, other than a Notice of Allowance and Fee(s) Due (Notice of Allowance), will not be issued unless either: 1) an interview was conducted but did not result in agreed to action that places the application in condition for allowance, or, 2) a determination is made that an interview would be unlikely to result in the application being placed in condition for allowance, and 3) an internal conference has been held to review any rejection of any claim.

4. Time for Reply:
   An Office action other than a Notice of Allowance or a final Office action will set a shortened statutory period of one month or thirty days, whichever is longer, for reply with no extension of time available under 37 CFR 1.136(a). Failure to timely file a reply within this non-extendible period for reply will result in the abandonment of the application.

5. Reply by Applicant:
   A timely reply to an Office action other than the Notice of Allowance must be submitted electronically via EFS or EFS-web and limited to addressing the rejections, objections and requirement made. Any amendment that attempts to: 1) add claims which would result in more than three pending independent claims or more than twenty pending total claims; 2) present claims not encompassed by the pre-examination search or an updated accelerated examination support document; or 3) present claims that are directed to a non-elected invention or an invention other than that previously claimed and examined in the application, will be treated as not fully responsive and will not be entered.

   For any amendment to the claims (including any new claim) that is not encompassed by the accelerated examination support document, applicant must provide an updated accelerated examination support document that encompasses the amended or new claims at the time of filing of the amendment.

   To proceed expeditiously with the examination, it is recommended that a reply with amendments made to any claim or with any new

claim being added be accompanied by an updated accelerated examination support document or a statement explaining how the amended or new claim is supported by the original accelerated examination support document.

6. Information Disclosure Statement (IDS):
   Any IDS filed during prosecution must be submitted electronically via EFS or EFS-web, accompanied by an updated accelerated examination support document, and be in compliance with 37 CFR 1.97 and 1.98.

7. Post-Allowance Processing:
   To expedite processing of the allowed application into a patent, the applicant must: 1) pay the required fees within one month of the date of the Notice of Allowance, and 2) not file any post allowance papers not required by the Office. In no event may the issue fee be paid and accepted later than three months from the date of the Notice of Allowance.

8. After-Final and Appeal Procedures:
   To expedite prosecution, after receiving the final Office action, applicant must: 1) promptly file a notice of appeal, an appeal brief and appeal fees; and 2) not request a pre-appeal brief conference.

   Any amendment, affidavit or other evidence filed after final Office action must comply with applicable rules and the requirements outlined in numbered paragraphs 5 and 6 above.

   On appeal, the application will proceed according to normal appeal procedures. After appeal, the application will again be treated special.

9. Proceedings Outside the Normal Examination Process:
   If the application becomes involved in a proceeding that is outside the normal examination process (e.g., a secrecy order, national security review, interference proceeding, petitions under 37 CFR 1.181, 182 or 183), the application will be treated special before and after such proceeding.

10. Final Disposition:
    The twelve month goal of this accelerated examination procedure ends with a final disposition. The mailing of a final Office action, a Notice of Allowance, the filing of a Notice of Appeal, or the filing of a Request for Continued Examination (RCE) is the final disposition.

If, during prosecution, a paper is not filed electronically using EFS-web, a reply is filed but is not fully responsive, the application is involved in an appeal, or a proceeding outside normal examination process, the application will still be examined expeditiously, however, the final disposition may occur more than twelve months from the filing of the application.

Any inquiry regarding this decision should be directed to Robert Weinhardt, Business Practice Specialist, at (571) 272-6633. Inquires may also be directed to Michael Cuff at (571) 272-6778.

Robert A. Weinhardt,
Business Practice Specialist
Technology Center 3600

RW/MAC/6/16/08

UNITED STATES PATENT AND TRADEMARK OFFICE

COMMISSIONER FOR PATENTS
UNITED STATES PATENT AND TRADEMARK OFFICE
P.O. BOX 1450
ALEXANDRIA, VA 22313-1450
www.uspto.gov

ASTRA ZENECA PHARMACEUTICALS LP
GLOBAL INTELLECTUAL PROPERTY
1800 CONCORD PIKE
WILMINGTON DE 19850-5437

MAILED

JUN 09 2009

OFFICE OF PETITIONS

Applicant: Chessari, et al.
Appl. No.: 12/120,736
Filing Date: May 15, 2008
Title: SEQUENTIAL CHEMICAL VAPOR DEPOSITION
Attorney Docket No.: ASMMC.9CPDVDDV
Pub. No.: 2008/0287462 A1
Pub. Date: November 20, 2008

This is a decision on the request for corrected of patent application publication under 37 CFR 1.221(b), received on January 8, 2009, for the above-identified application.

The request is granted.

The corrected patent application publication will be published in due course, unless the patent issues before the application is republished.

It would greatly benefit the Office if the request for corrected publication pointed out what was printed incorrectly in the application, where the error occurs in the publication and where the correct text or drawing is found in the application papers. Marked up relevant copies of the applications papers and the pre-grant publication may facilitate processing of the request, where it is not readily apparent where the error occurs. If it is not clear why the error is a material error, further explanation may be warranted

Inquiries relating to this matter may be directed to Mark O. Polutta at (571) 272-7709.

Mark O. Polutta
Senior Legal Advisor
Office of Patent Legal Administration
Office of the Deputy Commissioner
for Patent Examination Policy

UNITED STATES PATENT AND TRADEMARK OFFICE

Commissioner for Patents
United States Patent and Trademark Office
P.O. Box 1450
Alexandria, VA 22313-1450
www.uspto.gov

SHOEMAKER AND MATTARE, LTD
10 POST OFFICE ROAD - SUITE 100
SILVER SPRING, MD 20910

MAILED

FEB 16 2010

OFFICE OF PETITIONS

In re Application.	:	
Khanh Tran	:	DECISION ON PETITION
Application No. 12/120,758	:	TO WITHDRAW
Filed: May 15, 2008	:	FROM RECORD
Attorney Docket No. 6225	:	

This is a decision on the Request to Withdraw as attorney or agent of record under 37 C.F.R. § 1.36(b) filed December 4, 2009, which is being treated as a request to withdraw from employment in a proceeding before the Office under 37 C.F.R. § 10.40.

The request is **DISMISSED**.

A review of the file record indicates that Shoemaker and Mattare, LTD was not appointed power of attorney in this patent application and has only been designated as the correspondence address of record. Accordingly, the request to withdraw under 37 C.F.R. § 1.36(b) is not applicable.

The application is currently abandoned for failure to respond to the Office action mailed July 22, 2009.

Telephone inquires concerning this decision should be directed to the undersigned at 571-272-6059.

A. Kelley

Alicia Kelley
Petitions Examiner
Office of Petitions

UNITED STATES PATENT AND TRADEMARK OFFICE

Commissioner for Patents
United States Patent and Trademark Office
P.O. Box 1450
Alexandria, VA 22313-1450
www.uspto.gov

BRACEWELL & GIULLIANI LLP
P.O. BOX 61389
HOUSTON, TX 77208-1389

MAILED

SEP 28 2009

OFFICE OF PETITIONS

In re Application of	:	
Gordon A. TIBBITTS	:	
Application No. 12/120,763	:	DECISION ON PETITION
Filed: May 15, 2008	:	TO WITHDRAW
Attorney Docket No. 066015.000006	:	FROM RECORD
	:	

This is a decision on the Request to Withdraw as attorney or agent of record under 37 C.F.R. § 1.36(b), filed July 27, 2009.

The request is **NOT APPROVED.**

The Office will no longer accept address changes to a new practitioner or law firm filed with a Request, absent the filing of a power of attorney to the new representative. The Office will either change the correspondence address of record to the most current address information provided for the assignee of the entire interest who properly became of record under 37 CFR 3.71 or, if no assignee of the entire interest has properly been made of record under 37 CFR 3.71, the most current address information provided for the first named inventor.

Accordingly, the request to withdraw from record cannot be approved because the request to change the correspondence address is not the most current address for the assignee of the entire interest who properly became of record under 37 C.F.R 3.71.

In order to request or take action in a patent matter, the assignee must establish its ownership of the patent to the satisfaction of the Director. In this regard, a Statement under 37 CFR 3.73(b) must have either: (i) documentary evidence of a chain of title from the original owner to the assignee (*e.g.*, copy of an executed assignment), and a statement affirming that the documentary evidence of the chain of title from the original owner to the assignee was or concurrently is being submitted for recordation pursuant to § 3.11; or (ii) a statement specifying where documentary evidence of a chain of title from the original owner to the assignee is recorded in the assignment records of the Office (*e.g.*, reel and frame number).

All future communications from the Office will continue to be directed to the above-identified address until otherwise properly notified.

Telephone inquiries concerning this decision should be directed to the undersigned at 571-272-6735.

/Diane Goodwyn/
Diane Goodwyn
Petitions Examiner
Office of Petitions

UNITED STATES PATENT AND TRADEMARK OFFICE

Commissioner for Patents
United States Patent and Trademark Office
P.O. Box 1450
Alexandria, VA 22313-1450
www.uspto.gov

In re Application of :
Robert D. Kodis :

Application No. 12120771 :DECISION ON PETITION TO MAKE SPECIAL
Filed: :UNDER 37 CFR 1.102(c)(1)
:

Attorney Docket No. INK-001.02

This is a decision on the electronic petition under 37 CFR 1.102 (c)(1) ,filed 15-MAY-2008 to make the above-identified application special based on applicant's age as set forth in MPEP § 708.02, Section IV.

The petition is **GRANTED**.

A grantable petition to make an application special under 37 CFR 1.102(c)(1), MPEP § 708.02, Section IV: Applicant's Age must include a statement by applicant or a registered practitioner having evidence that applicant is at least 65 years of age. No fee is required.

Accordingly, the above-identified application has been accorded “special” status and will be taken up for action by the examiner upon the completion of all pre-examination processing.

Telephone inquires concerning this electronic decision should be directed to the Electronic Business Center at 866-217-9197.

All other inquires concerning either the examination or status of the application should be directed to the Technology Center.

PTO/SB/130 (03-08)
Approved for use through 05/31/2008. OMB 0651- 0031
U.S. Patent and Trademark Office; U.S. DEPARTMENT OF COMMERCE
Under the Paperwork Reduction Act of 1995, no persons are required to respond to a collection of information unless it contains a valid OMB control number

PETITION TO MAKE SPECIAL BASED ON AGE FOR ADVANCEMENT OF EXAMINATION UNDER 37 CFR 1.102(c)(1)

Application Information

Application Number	12120771	Confirmation Number	5634	Filing Date	2008-05-15
Attorney Docket Number (optional)	INK-001.02	Art Unit		Examiner	
First Named Inventor	KODIS, Robert D.				
Title of Invention	WASTE PROCESSING FOR PATHOGEN REDUCTION				

Attention: Office of Petitions

An application may be made special for advancement of examination upon filing of a petition showing that the applicant is 65 years of age, or more. No fee is required with such a petition. See 37 CFR 1.102(c)(1) and MPEP 708.02 (IV).

APPLICANT HEREBY PETITIONS TO MAKE SPECIAL FOR ADVANCEMENT OF EXAMINATION IN THIS APPLICATION UNDER 37 CFR 1.102(c)(1) and MPEP 708.02 (IV) ON THE BASIS OF THE APPLICANT'S AGE.

A grantable petition requires one of the following items:
(1) Statement by one named inventor in the application that he/she is 65 years of age, or more; or
(2) Certification by a registered attorney/agent having evidence such as a birth certificate, passport, driver's license, etc. showing one named inventor in the application is 65 years of age, or more.

Name of Inventor who is 65 years of age, or older

Given Name	Middle Name	Family Name	Suffix
Robet	D.	Kodis	

A signature of the applicant or representative is required in accordance with 37 CFR 1.33 and 10.18.
Please see 37 CFR 1.4(d) for the format of the signature.

Select (1) or (2) :

○ (1) I am an inventor in this application and I am 65 years of age, or more.

◉ (2) I am an attorney or agent registered to practice before the Patent and Trademark Office, and I certify that I am in possession of evidence, and will retain such in the application file record, showing that the inventor listed above is 65 years of age, or more.

Signature	/SCOTT E. KAMHOLZ/	Date (YYYY-MM-DD)	2008-05-15
Name	Scott E. Kamholz	Registration Number	48543

PTO/SB/130 (03-08)
Approved for use through 05/31/2008. OMB 0651- 0031
U.S. Patent and Trademark Office; U.S. DEPARTMENT OF COMMERCE
Under the Paperwork Reduction Act of 1995, no persons are required to respond to a collection of information unless it contains a valid OMB control number

Privacy Act Statement

The Privacy Act of 1974 (P.L. 93-579) requires that you be given certain information in connection with your submission of the attached form related to a patent application or patent. Accordingly, pursuant to the requirements of the Act, please be advised that: (1) the general authority for the collection of this information is 35 U.S.C. 2(b)(2); (2) furnishing of the information solicited is voluntary; and (3) the principal purpose for which the information is used by the U.S. Patent and Trademark Office is to process and/or examine your submission related to a patent application or patent. If you do not furnish the requested information, the U.S. Patent and Trademark Office may not be able to process and/or examine your submission, which may result in termination of proceedings or abandonment of the application or expiration of the patent.

The information provided by you in this form will be subject to the following routine uses:

1. The information on this form will be treated confidentially to the extent allowed under the Freedom of Information Act (5 U.S.C. 552) and the Privacy Act (5 U.S.C. 552a). Records from this system of records may be disclosed to the Department of Justice to determine whether the Fr eedom of Information Act requires disclosure of these records.

2. A record from this system of records may be disclosed, as a routine use, in the course of presenting evidence to a court, magistrate, or administrative tribunal, including disclosures to opposing counsel in the course of settlement negotiations.

3. A record in this system of records may be disclosed, as a routine use, to a Member of Congress submitting a request involving an individual, to whom the record pertains, when the individual has requested assistance from the Member with respect to the subject matter of the record.

4. A record in this system of records may be disclosed, as a routine use, to a contractor of the Agency having need for the information in order to perform a contract. Recipients of information shall be required to comply with the requirements of the Privacy Act of 1974, as amended, pursuant to 5 U.S.C. 552a(m).

5. A record related to an International Application filed under the Patent Cooperation Treaty in this system of records may be disclosed, as a routine use, to the International Bureau of the World Intellectual Property Organization, pursuant to the Patent Cooperation Treaty.

6. A record in this system of records may be disclosed, as a routine use, to another federal agency for purposes of National Security review (35 U.S.C. 181) and for review pursuant to the Atomic Energy Act (42 U.S.C. 218(c)).

7. A record from this system of records may be disclosed, as a routine use, to the Administrator, General Services, or his/her designee, during an inspection of records conducted by GSA as part of that agency's responsibility to recommend improvements in records management practices and programs, under authority of 44 U.S.C. 2904 and 2906. Such disclosure shall be made in accordance with the GSA regulations governing inspection of records for this purpose, and any other relevant (i.e., GSA or Commerce) directive. Such disclosure shall not be used to make determinations about indivi duals.

8. A record from this system of records may be disclosed, as a routine use, to the public after either publication of the application pursuant to 35 U.S.C. 122(b) or issuance of a patent pursuant to 35 U.S.C. 151. Further, a record may be disclosed, subject to the limitations of 37 CFR 1.14, as a routine use, to the public if the record was filed in an application which became abandoned or in which the proceedings were terminated and which application is referenced by either a published application, an application open to public inspections or an issued patent.

9. A record from this system of records may be disclosed, as a routine use, to a Federal, State, or local law enforcement agency, if the USPTO becomes aware of a violation or potential violation of law or regulation.

UNITED STATES PATENT AND TRADEMARK OFFICE

UNITED STATES DEPARTMENT OF COMMERCE
United States Patent and Trademark Office
Address: COMMISSIONER FOR PATENTS
P.O. Box 1450
Alexandria, Virginia 22313-1450
www.uspto.gov

APPLICATION NO.	FILING DATE	FIRST NAMED INVENTOR	ATTORNEY DOCKET NO.	CONFIRMATION NO.
12/120,804	05/15/2008	Jakub Kania	DE920080064US1 (105104)	5697

78148 7590 08/06/2008
KING & SPALDING
1180 PEACHTREE ST.
ATLANTA, GA 30309

EXAMINER
ZHEN, WEI Y

ART UNIT	PAPER NUMBER
2191	

MAIL DATE	DELIVERY MODE
08/06/2008	PAPER

Please find below and/or attached an Office communication concerning this application or proceeding.

The time period for reply, if any, is set in the attached communication.

UNITED STATES PATENT AND TRADEMARK OFFICE

Commissioner for Patents
United States Patent and Trademark Office
P.O. Box 1450
Alexandria, VA 22313-1450
www.uspto.gov

August 4, 2008

John M. Harringon
King & Spalding LLP
1180 Peachtree Street
Atlanta, GA 30309

In re Application of: Jakub Kania Serial No.: 12/120,804 Filed: May 15, 2008 Docket: DE920080064US1 Title: AUTOMATIC TESTS OF PRODUCT DOCUMENTATION	DECISION ON PETITION TO MAKE SPECIAL FOR NEW APPLICATION UNDER 37 C.F.R. § 1.102 & M.P.E.P. § 708.02

This is a decision on the petition filed on May 15, 2008 to make the above-identified application special for accelerated examination procedure under 37 C.F.R. § 1.102(d).

The petition to make the application special is **DISMISSED**.

REGULATION AND PRACTICE

A grantable petition to make special under 37 C.F.R. § 1.102(d) and pursuant to the "Change to Practice for Petitions in Patent Applications to Make Special and for Accelerated Examination" published in the Federal Register on June 26, 2006 (71 Fed. Reg. 36323), must satisfy the following conditions:

I. Conditions Regarding the Application:

1. the application must be a non-reissue utility or design application filed under 37 CFR 1.111(a);
2. the application, the petition and the required fees must be filed electronically using the USPTO's electronic filing system (EFS), or EFS-web; if not filed electronically, a statement asserting that EFS and EFS-web were not available during the normal business hours.
3. at the time of filing, the application must be complete under 37 CFR 1.51 and in condition for examination;
4. the application must contain three or fewer independent claims and twenty or fewer total claims and the claims must be directed to a single invention.

II. Conditions Regarding the Petition:

The petition must:

1. be filed with the application;

2. include a statement that applicant agrees not to separately argue the patentability of any independent claim during any appeal in the application;

3. include a statement that applicant agrees to make an election without traverse in a telephone interview.

4. include a statement that applicant agrees to conduct such an interview when requested by the examiner.

5. include a statement, made based on a good faith belief, that a preexamination search in compliance with the following requirements, was conducted, including an identification of the filed of search by United States class and subclass, where applicable, and for database searches, the search logic or chemical structure or sequence used as a query, the name of the file(s) searched and the database service, and the date of the search.

The preexamination search must:

5.1 involve U.S. patents and patent application publications, foreign patent documents, and non-patent literature, unless the applicant can justify with reasonable certainty that no references more pertinent than those already identified are likely to be found in the eliminated sources and includes such a justification with this statement;

5.2. be directed to the claimed invention and encompass all of the features of the claims, giving the claims the broadest reasonable expectation;

5.3. encompass the disclosed features that may be claimed.

6. must provide in support of the petition an accelerated examination support document. An accelerated examination support document must include:

6.1. an information disclosure statement (IDS) in compliance with 37 CFR 1.98 citing each reference deemed most closely related to the subject matter of each of the claims;

6.2. an identification of all the limitations in the claims that are disclosed by the reference specifying where the limitation is disclosed in the cited reference;

6.3. a detailed explanation of how each of the claims are patentable over the references cited with particularity required by 37 CFR 1.111(b) and (c);

6.4. a concise statement of the utility of the invention as defined in each of the independent claims (unless the application is a design application);

6.5. a showing of where each limitation of the claims finds support under 35 USC 112, first paragraph, in the written description of the specification. If applicable, the showing must also identify: (1) each means- (or step) plus-function claim element that invokes consideration under 35 UDC 112, sixth paragraph; and (2) the structure, material, or acts in the specification that corresponds to each means- (or step) plus-function claim element that invokes consideration under 35 UDC 112, sixth paragraph; if the application claims the benefit of one or more applications under title 35, United States Code, the showing must also include where each limitation of the claims finds support under 35 USC 112, first paragraph, in each such application in which such supports exists;

6.6. an identification of any cited references that may be disqualified under 35 USC 103(c).

REVIEW OF FACTS

The conditions I1-I4, II1-II4, II5, II5.3, and II6.1-II6.6 above are met. However, the petition fails to comply with conditions II5.2, above. Therefore, the petition fails to meet the required conditions to be accorded special status under the accelerated examination procedure.

Regarding the requirement of MPEP § 708.02(a)(I.)(H)[1] and item II.5.2 above, the pre-examination search must be directed to the (instant) claimed invention. Text searches of section (A) of the Pre-examination Search Document should cover individual features of the claims themselves as well as a combination of features. The text search for US and foreign documents as well as for non-patent literature should include appropriate terms, Boolean operators, truncations, and proximities if applicable.

Strategies used appear to be limited to testing documentation which is considerably broader in scope that the claimed invention. For example, claimed features relating to the structure of documentation do not appear to have been encompassed in strategies employed in all search engines used. Petitioner is reminded that claimed features should be covered both individually and in combination. In addition, the use of synonyms in the strategy appears to be very limited. For example, the following terms could be used as synonyms to "testing": "test$5 or verif$5 or check$5 or validat$6". A suggested search strategy is included below. However, Petitioner should note that this strategy is not intended to be exhaustive of the strategies that should be used to cover claimed features in combination and individually but is provided as an example only:

> test$5 or verif$5 or check$5 or validat$6same (software$2 or application$2 or product$2) same document$6 same (stub$3 or tag$4).

Clarification and/or correction are required.

Examples of various search strategies can be found on USPTO website, using the link http://www.uspto.gov/web/patents/accelerated/ and clicking on "Sample Accelerated Examination Support Document".

Regarding the requirement of MPEP § 708.02(a)(I.)(I)(3) and item II.6.2 above, the accelerated examination support document must include an identification of all the limitations in the claims that are disclosed by the reference specifying where the limitation is disclosed in the cited reference. The Examination Support Document identifies specific claimed features which are not disclosed by references deemed most closely related and discussed in detail disclosures of the references. However, no identification of specific claimed features disclosed by the references is provided. Correction is required

Finally, with respect to the requirement of MPEP § 708.02(a)(I.)(I)(5) and item II.6.5 above, the Accelerated Examination Support Document must provide a showing of where each limitation of the claims finds support under 35 USC 112, first paragraph, in the written description of the specification. The Examination support document includes a general allegation that "support may be found at least in paragraphs [004], [005], [0025]-[0027], 0029-0031], [0033-0036], and

[1] MPEP 8th ed. rev 6 September 2007

FIGS3 and 4 of the application". However, this disclosure fails to identify the location of support for each claimed feature. Petitioner is respectfully requested to correlate locations given with each element of the claimed feature for which support is given. In addition, by stating that support may be found in "at least" the locations provided, it is unclear if these locations would provide a complete basis of support. Clarification and **identification of support for each claim limitation** is required.

DECISION

For the above-stated reasons, the petition is **Dismissed**. The application will therefore be taken up by the examiner for action in its regular turn.

Petitioner is given a single opportunity to perfect the petition. Any request for reconsideration of this decision must be submitted within 1 (one) month or 30 (thirty) days, whichever is longer, (no extension of time under 37 CFR 1.136(a)) from the date of this decision in order to be considered timely. Any request for reconsideration must address the deficiencies indicated above.

Petitioner is reminded that, upon granting of the special status of the application on request for reconsideration, the application will be processed expeditiously. However, due to the dismissal of the instant petition, examination may not be completed within twelve months of the filing date of the application.

Any inquiry regarding this decision should be directed Gail Hayes, Quality Assurance Specialist, at (571) 272-3591.

/Gail Hayes/

Gail Hayes, Quality Assurance Specialist
Technology Center 2100

UNITED STATES PATENT AND TRADEMARK OFFICE

UNITED STATES DEPARTMENT OF COMMERCE
United States Patent and Trademark Office
Address: COMMISSIONER FOR PATENTS
P.O. Box 1450
Alexandria, Virginia 22313-1450
www.uspto.gov

APPLICATION NO.	FILING DATE	FIRST NAMED INVENTOR	ATTORNEY DOCKET NO.	CONFIRMATION NO.
12/120,804	05/15/2008	Jakub Kania	DE920080064US1 (105104)	5697

78148 7590 12/01/2008
KING & SPALDING
1180 PEACHTREE ST.
ATLANTA, GA 30309

EXAMINER
ZHEN, WEI Y

ART UNIT	PAPER NUMBER
2191	

MAIL DATE	DELIVERY MODE
12/01/2008	PAPER

Please find below and/or attached an Office communication concerning this application or proceeding.

The time period for reply, if any, is set in the attached communication.

UNITED STATES PATENT AND TRADEMARK OFFICE

COMMISSIONER FOR PATENTS
UNITED STATES PATENT AND TRADEMARK OFFICE
WASHINGTON, DC 20231
www.uspto.gov

John M. Harrington
King & Spalding LLP
1180 Peachtree Street
Atlanta, GA 30309

In re Application of:
Jakub Kania
Serial No.: 12/120,804
Filed: May 15, 2008
Docket: DE920080064US1 (105104)
Title: AUTOMATIC TESTS OF PRODUCT DOCUMENTATION

DECISION ON PETITION TO MAKE SPECIAL FOR NEW APPLICATION UNDER 37 C.F.R. § 1.102 & M.P.E.P. § 708.02

This is a decision on the renewed petition filed on September 5, 2008 to make the above-identified application special for accelerated examination procedure under 37 C.F.R. § 1.102(d). The original petition, submitted on May 15, 2008 was dismissed, in a decision mailed August 6, 2008, for failure: to search for individual features of the claim as well as a combination of features (item II5.2); to identify elements of the claimed invention disclosed by references deemed most closely related (item II6.2); and to provide a showing of where each claimed limitation finds support under 35 USC 112, first paragraph in the written description of the specification (item II6.5).

The renewed petition to make the application special is **DENIED**.

As part of the renewed petition a revised Examination Support Document is submitted. The revised document identifies elements of the claimed invention disclosed by references deemed most closely related. The document also identifies the location of support for each element of the claimed invention. However, the revised search provided in the Statement of Preliminary Examination fails to include individual claimed features. While the search for the basic concept of testing documentation is provided in the updated search, other individual features are not. For example, claimed features include "running/executing the test stub files with the code or command portion inserted" as well as generating a "validating test report" or an "error test report". However, the search presented does not appear to cover these features including those listed as a basis for patentability. In addition, the search of non-patent literature fails to include appropriate synonyms for documentation.

Therefore, the revised Petition for Accelerated Examination submitted August 29, 2008 complies with items II 6.2 and II6.5 but fails to comply with item II.5.2.

For the above-stated reasons, the petition is **Denied**. The application will therefore be taken up by the examiner for action in its regular turn.

Any inquiry regarding this decision should be directed to Gail Hayes, Quality Assurance Specialist, at (571) 272-3591.

_____/Gail Hayes/_____
Gail Hayes
Quality Assurance Specialist
Technology Center 2100
Computer Security, Architecture and Software

UNITED STATES PATENT AND TRADEMARK OFFICE

UNITED STATES DEPARTMENT OF COMMERCE
United States Patent and Trademark Office
Address: COMMISSIONER FOR PATENTS
P.O. Box 1450
Alexandria, Virginia 22313-1450
www.uspto.gov

APPLICATION NO.	FILING DATE	FIRST NAMED INVENTOR	ATTORNEY DOCKET NO.	CONFIRMATION NO.
12/120,810	05/15/2008	JONG-HYO LEE	678-3503	5712

7590 12/31/2009
THE FARRELL LAW FIRM, LLP
290 Broadhollow Road
Suite 210E
Melville, NY 11747

EXAMINER	
ART UNIT	PAPER NUMBER
2112	
MAIL DATE	DELIVERY MODE
12/31/2009	PAPER

DECISION GRANTING PETITION UNDER 37 CFR 1.138(d)

The declaration of express abandonment is recognized

This is in response to the petition under 37 CFR 1.138(d), requesting for a refund of any previously paid search fee and excess claims fee in the above-identified application.

The petition is granted.

The express abandonment is recognized. Any previously paid search fee and excess claims fee are hereby refunded.

Telephone inquiries should be directed to the Office of Data Management at (571) 272-4200.

Nimi Farmer

Patent Publication Branch
Office of Data Management

[illegible]

Credit Card Refund Totals $[illegible]

[illegible]

Adjustment date: 12/31/2009 [illegible]
[illegible] INTEFUN [illegible]
02 FC:1111 -510.00 OP
04 FC:1202 -[illegible] OP
05 FC:1201 -210.00 OP

FORM PET651G (Rev. 08/07)

UNITED STATES PATENT AND TRADEMARK OFFICE

UNITED STATES DEPARTMENT OF COMMERCE
United States Patent and Trademark Office
Address: COMMISSIONER FOR PATENTS
P.O. Box 1450
Alexandria, Virginia 22313-1450
www.uspto.gov

APPLICATION NO.	FILING DATE	FIRST NAMED INVENTOR	ATTORNEY DOCKET NO.	CONFIRMATION NO.
12/120,811	05/15/2008	Stefano Sidoti	FR920080066	5713

79046 7590 06/25/2008
THORNE & HALAJIAN, LLP
111 WEST MAIN STREET
BAY SHORE, NY 11706

EXAMINER

ART UNIT	PAPER NUMBER
3664	

MAIL DATE	DELIVERY MODE
06/25/2008	PAPER

Please find below and/or attached an Office communication concerning this application or proceeding.

The time period for reply, if any, is set in the attached communication.

UNITED STATES PATENT AND TRADEMARK OFFICE

UNDER SECRETARY OF COMMERCE FOR INTELLECTUAL PROPERTY AND
DIRECTOR OF THE UNITED STATES PATENT AND TRADEMARK OFFICE
WASHINGTON, DC 20231
www.uspto.gov

MAILED
FROM DIRECTORS OFFICE

JUN 25 2008

TECHNOLOGY CENTER 3600

Thorne & Halajian, LLP
111 West Main Street
Bay Shore, NY 11706

In re application of
Sidoti et al.
Application No. 12/120,811
Filed: May 15, 2008
For: METHOD AND SYSTEM FOR SELECTIVE ROUTE SEARCH ON SATELLITE NAVIGATORS

DECISION ON PETITION TO MAKE SPECIAL FOR NEW APPLICATION UNDER 37 CFR 1.102

This is a decision on the petition filed on May 15, 2008 to make the above-identified application special for accelerated examination procedure under 37 C.F.R. § 1.102(d).

The petition to make the application special is **DISMISSED.**

REGULATION AND PRACTICE

A grantable petition to make special under 37 C.F.R. § 1.102(d) and pursuant to the "Change to Practice for Petitions in Patent Applications to Make Special and for Accelerated Examination" published in the Federal Register on June 26, 2006 (71 Fed. Reg. 36323), must satisfy the following conditions:

I. Conditions Regarding the Application:

1. the application must be a non-reissue utility or design application filed under 37 CFR 1.111(a);

2. the application, the petition and the required fees must be filed electronically using the USPTO's electronic filing system (EFS), or EFS-web; if not filed electronically, a statement asserting that EFS and EFS-web were not available during the normal business hours;

3. at the time of filing, the application must be complete under 37 CFR 1.51 and in condition for examination;

4. the application must contain three or fewer independent claims and twenty or fewer total claims and the claims must be directed to a single invention.

II. Conditions Regarding the Petition:

The petition must:

1. be filed with the application;

2. include a statement that applicant agrees not to separately argue the patentability of any independent claim during any appeal in the application;

3. include a statement that applicant agrees to make an election without traverse in a telephone interview;

4. include a statement that applicant agrees to conduct such an interview when requested by the examiner;

5. include a statement, made based on a good faith belief, that a preexamination search in compliance with the following requirements, was conducted, including an identification of the field of search by United States class and subclass, where applicable, and for database searches, the search logic or chemical structure or sequence used as a query, the name of the file(s) searched and the database service, and the date of the search.

The preexamination search must:

5.1 involve U.S. patents and patent application publications, foreign patent documents, and non-patent literature, unless the applicant can justify with reasonable certainty that no references more pertinent than those already identified are likely to be found in the eliminated sources and includes such a justification with this statement;

5.2. be directed to the claimed invention and encompass all of the features of the claims, giving the claims the broadest reasonable expectation;

5.3. encompass the disclosed features that may be claimed.

6. must provide in support of the petition an accelerated examination support document.

An accelerated examination support document must include:

6.1. an information disclosure statement (IDS) in compliance with 37 CFR 1.98 citing each reference deemed most closely related to the subject matter of each of the claims;

6.2. an identification of all the limitations in the claims that are disclosed by the reference specifying where the limitation is disclosed in the cited reference;

6.3. a detailed explanation of how each of the claims are patentable over the references cited with particularity required by 37 CFR 1.111(b) and (c);

6.4. a concise statement of the utility of the invention as defined in each of the independent claims (unless the application is a design application);

6.5. a showing of where each limitation of the claims finds support under 35 USC 112, first paragraph, in the written description of the specification. If applicable, the showing must also identify: (1) each means- (or step) plus-function claim element that invokes consideration under 35 UDC 112, sixth paragraph; and (2) the structure, material, or acts in the specification that corresponds to each means- (or step) plus-

function claim element that invokes consideration under 35 UDC 112, sixth paragraph; if the application claims the benefit of one or more applications under title 35, United States Code, the showing must also include where each limitation of the claims finds support under 35 USC 112, first paragraph, in each such application in which such supports exists;

6.6. an identification of any cited references that may be disqualified under 35 USC 103(c).

REVIEW OF FACTS

The petition fails to comply with conditions II.5.2, II.6.5 above.

As to condition II.5.2, the petition lacks an indication of a preexamination search that encompasses all of the features of the claims. With respect to the classification search, in addition to the areas already searched, the search needs to include a search of 340/988, 990, 995.13, 995.18, 995.19, 426.16, 572.1 and 5.61.

As to condition II.6.5, the showing of where each limitation of the claims find support under 35 USC 112, first paragraph in the written description of the specification is sufficient. However, at the bottom of page 12 and continuing on page 13 of the AESD, the right hand column contains text (e.g. "Acts of calculating and updating look to vehicle") that appear to be out of place. This discrepancy should be corrected in any resubmitted AE Support Document .

Therefore, the petition fails to meet the required conditions to be accorded special status under the accelerated examination procedure.

DECISION

For the above-stated reasons, the petition is DISMISSED. The application will therefore be taken up by the examiner for action in its regular turn.

Petitioner is given a single opportunity to perfect the petition. Any request for reconsideration of this decision must be submitted within 1 (one) month or 30 (thirty) days, whichever is longer, (no extension of time under 37 CFR 1.136(a)) from the date of this decision in order to be considered timely. Any request for reconsideration must address the deficiencies indicated above.

Petitioner is reminded that, upon granting of the special status of the application on request for reconsideration, the application will be processed expeditiously. However,

due to the dismissal of the instant petition, examination may not be completed within twelve months of the filing date of the application.

Any inquiry regarding this decision should be directed to Teri P. Luu, Quality Assurance Specialist, at (571) 272-7045.

Teri P. Luu
Quality Assurance Specialist
Technology Center 3600

TL/tl: 06/23/08

UNITED STATES PATENT AND TRADEMARK OFFICE

UNITED STATES DEPARTMENT OF COMMERCE
United States Patent and Trademark Office
Address: COMMISSIONER FOR PATENTS
P.O. Box 1450
Alexandria, Virginia 22313-1450
www.uspto.gov

APPLICATION NO.	FILING DATE	FIRST NAMED INVENTOR	ATTORNEY DOCKET NO.	CONFIRMATION NO.
12/120,811	05/15/2008	Stefano Sidoti	FR920080066	5713

79046 7590 08/18/2008
THORNE & HALAJIAN, LLP
111 WEST MAIN STREET
BAY SHORE, NY 11706

EXAMINER

ART UNIT	PAPER NUMBER
3664	

MAIL DATE	DELIVERY MODE
08/18/2008	PAPER

Please find below and/or attached an Office communication concerning this application or proceeding.

The time period for reply, if any, is set in the attached communication.

UNITED STATES PATENT AND TRADEMARK OFFICE

Commissioner for Patents
United States Patent and Trademark Office
P.O. Box 1450
Alexandria, VA 22313-1450
www.uspto.gov

MAILED FROM
DIRECTORS OFFICE

AUG 1 8 2008

TECHNOLOGY CENTER 2800

Thorne & Halajian, LLP
111 West Main Street
Bay Shore, NY 11706

In re application of Sidoti et al. Application No. 12/120,811 Filed: May 15, 2008 For: METHOD AND SYSTEM FOR SELECTIVE ROUTE SEARCH ON SATELLITE NAVIGATORS	DECISION ON PETITION TO MAKE SPECIAL FOR NEW APPLICATION UNDER 37 CFR 1.102

This is a decision on the renewed petition filed on July 17, 2008 to make the above-identified application special for accelerated examination procedure under 37 C.F.R. § 1.102(d).

The petition to make the application special is **GRANTED**.

The application is eligible for accelerated examination and the petition complies with the conditions for granting the application special status pursuant to the "Change to Practice for Petitions in Patent Applications to Make Special and for Accelerated Examination" published June 26, 2006, in the Federal Register. (71 Fed. Reg. 36323).

The prosecution of the instant application will be conducted expeditiously according to the following guidelines.

1. The application will be docketed to an examiner and taken up for action within two weeks of the date of this decision.

2. Restriction Practice:
If the examiner determines that the claims are not directed to a single invention, a telephone request to elect one single invention will be made pursuant to MPEP 812.01. As a prerequisite to the grant of this petition, the applicant has agreed to make an oral election, by telephone, without traverse. If the applicant refuses to make an election without traverse, or the examiner cannot reach the applicant after a reasonable effort, the examiner will treat the first claimed invention (invention defined by claim 1) as having being constructively elected without traverse for examination.

3. Office action:
If it is determined that, after appropriate consultation, there is a potential rejection or any other issue to be addressed, the examiner will telephone the applicant and arrange an interview to discuss and resolve the issue. An Office action, other than a Notice of Allowance and Fee(s) Due (Notice of Allowance), will not be issued unless either: 1) an interview was conducted but did not result in agreed to action that places the application in condition for allowance, or, 2) a determination is made that an interview would be unlikely to result in the application being placed in condition for allowance, and 3) an internal conference has been held to review any rejection of any claim.

4. Time for Reply:
An Office action other than a Notice of Allowance or a final Office action will set a shortened statutory period of one month or thirty days, whichever is longer, for reply with no extension of time available under 37 CFR 1.136(a). Failure to timely file a reply within this non-extendible period for reply will result in the abandonment of the application.

5. Reply by Applicant:
A timely reply to an Office action other than the Notice of Allowance must be submitted electronically via EFS or EFS-web and limited to addressing the rejections, objections and requirement made. Any amendment that attempts to: 1) add claims which would result in more than three pending independent claims or more than twenty pending total claims; 2) present claims not encompassed by the pre-examination search or an updated accelerated examination support document; or 3) present claims that are directed to a non-elected invention or an invention other than that previously claimed and examined in the application, will be treated as not fully responsive and will not be entered.

   For any amendment to the claims (including any new claim) that is not encompassed by the accelerated examination support document, applicant must provide an updated accelerated examination support document that encompasses the amended or new claims at the time of filing of the amendment.

   To proceed expeditiously with the examination, it is recommended that a reply with amendments made to any claim or with any new claim being added be accompanied by an updated accelerated examination support document or a statement explaining how the amended or new claim is supported by the original accelerated examination support document.

6. Information Disclosure Statement (IDS):
Any IDS filed during prosecution must be submitted electronically via EFS or EFS-web, accompanied by an updated accelerated examination support document, and be in compliance with 37 CFR 1.97 and 1.98.

7. Post-Allowance Processing:
To expedite processing of the allowed application into a patent, the applicant must: 1) pay the required fees within one month of the date of the Notice of Allowance, and 2) not file any post allowance papers not required by the Office. In no event may the issue fee be paid and accepted later than three months from the date of the Notice of Allowance.

8. After-Final and Appeal Procedures:
To expedite prosecution, after receiving the final Office action, applicant must: 1) promptly file a notice of appeal, an appeal brief and appeal fees; and 2) not request a pre-appeal brief conference.

   Any amendment, affidavit or other evidence filed after final Office action must comply with applicable rules and the requirements outlined in numbered paragraphs 5 and 6 above.

   On appeal, the application will proceed according to normal appeal procedures. After appeal, the application will again be treated special.

9. Proceedings Outside the Normal Examination Process:
If the application becomes involved in a proceeding that is outside the normal examination process (e.g., a secrecy order, national security review, interference proceeding, petitions under 37 CFR 1.181, 182 or 183), the application will be treated special before and after such proceeding.

10. Final Disposition:
The twelve month goal of this accelerated examination procedure ends with a final disposition. The mailing of a final Office action, a Notice of Allowance, the filing of a Notice of Appeal, or the filing of a Request for Continued Examination (RCE) is the final disposition.

If, during prosecution, a paper is not filed electronically using EFS-web, a reply is filed but is not fully responsive, the application is involved in an appeal, or a proceeding outside normal examination process, the application will still be examined expeditiously, however, the final disposition may occur more than twelve months from the filing of the application.

Any inquiry regarding this decision should be directed to Quality Assurance Specialist Teri P. Luu, at (571) 272-7045.

Teri P. Luu
Quality Assurance Specialist
Technology Center 3600

TL/tl: 08/13/08

UNITED STATES PATENT AND TRADEMARK OFFICE

UNITED STATES DEPARTMENT OF COMMERCE
United States Patent and Trademark Office
Address: COMMISSIONER FOR PATENTS
P.O. Box 1450
Alexandria, Virginia 22313-1450
www.uspto.gov

APPLICATION NO.	FILING DATE	FIRST NAMED INVENTOR	ATTORNEY DOCKET NO.	CONFIRMATION NO.
12/120,829	05/15/2008	Radhika Bhatnagar	ROC920080249US1 (105108)	5748

78148 7590 08/18/2008
KING & SPALDING
1180 PEACHTREE ST.
ATLANTA, GA 30309

EXAMINER
ALAM, HOSAIN T

ART UNIT	PAPER NUMBER
2166	

MAIL DATE	DELIVERY MODE
08/18/2008	PAPER

Please find below and/or attached an Office communication concerning this application or proceeding.

The time period for reply, if any, is set in the attached communication.

UNITED STATES PATENT AND TRADEMARK OFFICE

Commissioner for Patents
United States Patent and Trademark Office
P.O. Box 1450
Alexandria, VA 22313-1450
www.uspto.gov

John M. Harrington
KING & SPALDING LLP
1180 Peachtree Street
Atlanta, GA 30309

In re Application of: BHATNAGAR et al Serial No.: 12/120,829 Filed: May 15, 2008 Attorney Docket: ROC920080249US1 Title: METHOD FOR MATCHING USER DESCRIPTIONS OF TECHNICAL PROBLEM MANIFESTATIONS WITH SYSTEM-LEVEL PROBLEM DESCRIPTIONS	DECISION ON PETITION TO MAKE SPECIAL FOR NEW APPLICATION UNDER 37 C.F.R. § 1.102 & M.P.E.P. § 708.02

This is a decision on the petition filed on 15 mAY 2008 to make the above-identified application special for accelerated examination procedure under 37 C.F.R. § 1.102(d).

The petition to make the application special is **GRANTED**.

The application is eligible for accelerated examination and the petition complies with the conditions for granting the application special status pursuant to the "Change to Practice for Petitions in Patent Applications to Make Special and for Accelerated Examination" published June 26, 2006, in the Federal Register. (71 Fed. Reg. 36323).

The prosecution of the instant application will be conducted expeditiously according to the following guidelines.

1. The application will be docketed to an examiner and taken up for action within two weeks of the date of this decision.

2. Restriction Practice:
   If the examiner determines that the claims are not directed to a single invention, a telephone request to elect one single invention will be made pursuant to MPEP 812.01. As a prerequisite to the grant of this petition, the applicant has agreed to make an oral election, by telephone, without traverse. If the applicant refuses to make an election without traverse, or the examiner cannot reach the applicant after a reasonable effort, the examiner will treat the first claimed invention (invention defined by claim 1) as having being constructively elected without traverse for examination.

3. Office action:
   If it is determined that, after appropriate consultation, there is a potential rejection or any other issue to be addressed, the examiner will telephone the applicant and arrange an interview to discuss and resolve the issue. An Office action, other than a Notice of Allowance and Fee(s) Due (Notice of Allowance), will not be issued unless either: 1) an interview was conducted but did not result in agreed to action that places the application in condition for allowance, or, 2) a determination is made that an interview would be unlikely to result in the application being placed in condition for allowance, and 3) an internal conference has been held to review any rejection of any claim.

4. Time for Reply:
   An Office action other than a Notice of Allowance or a final Office action will set a shortened statutory period of one month or thirty days, whichever is longer, for reply with no extension of time available under 37 CFR 1.136(a). Failure to timely file a reply within this non-extendible period for reply will result in the abandonment of the application.

5. Reply by Applicant:
   A timely reply to an Office action other than the Notice of Allowance must be submitted electronically via EFS or EFS-web and limited to addressing the rejections, objections and requirement made. Any amendment that attempts to: 1) add claims which would result in more than three pending independent claims or more than twenty pending total claims; 2) present claims not encompassed by the pre-examination search or an updated accelerated examination support document; or 3) present claims that are directed a non-elected invention or an invention other than that previously claimed and examined in the application, will be treated as not fully responsive and will not be entered.

   For any amendment to the claims (including any new claim) that is not encompassed by the accelerated examination support document, applicant must provide an updated accelerated examination support document that encompasses the amended or new claims at the time of filing of the amendment.

   To proceed expeditiously with the examination, it is recommended that a reply with amendments made to any claim or with any new claim being added be accompanied by an updated accelerated examination support document or a statement explaining how the amended or new claim is supported by the original accelerated examination support document.

6. Information Disclosure Statement (IDS):
   Any IDS filed during prosecution must be submitted electronically via EFS or EFS-web, accompanied by an updated accelerated examination support document, and be in compliance with 37 CFR 1.97 and 1.98.

7. Post-Allowance Processing:
   To expedite processing of the allowed application into a patent, the applicant must: 1) pay the required fees within one month of the date of the Notice of Allowance, and 2) not file any post allowance papers not required by the Office. In no event may the issue fee be paid and accepted later than three months from the date of the Notice of Allowance.

8. After-Final and Appeal Procedures:
   To expedite prosecution, after receiving the final Office action, applicant must: 1) promptly file a notice of appeal, an appeal brief and appeal fees; and 2) not request a pre-appeal brief conference.

   Any amendment, affidavit or other evidence filed after final Office action must comply with applicable rules and the requirements outlined in numbered paragraphs 5 and 6 above.

   On appeal, the application will proceed according to normal appeal procedures. After appeal, the application will again be treated special.

9. Proceedings Outside the Normal Examination Process:
   If the application becomes involved in a proceeding that is outside the normal examination process (e.g., a secrecy order, national security review, interference proceeding, petitions under 37 CFR 1.181, 182 or 183), the application will be treated special before and after such proceeding.

10. Final Disposition:
    The twelve month goal of this accelerated examination procedure ends with a final disposition. The mailing of a final Office action, a Notice of Allowance, the filing of a Notice of Appeal, or the filing of a Request for Continued Examination (RCE) is the final disposition.

If, during prosecution, a paper is not filed electronically using EFS-web, a reply is filed but is not fully responsive, the application is involved in an appeal, or a proceeding outside normal examination process, the application will still be examined expeditiously, however, the final disposition may occur more than twelve months from the filing of the application.

Any inquiry concerning this decision should be directed to the undersigned whose telephone number is (571) 272-3613.

Vincent N. Trans, SPRE/QAS
Technology Center 2100
Computer Architecture, Software, and
Information Security

UNITED STATES PATENT AND TRADEMARK OFFICE

UNITED STATES DEPARTMENT OF COMMERCE
United States Patent and Trademark Office
Address: COMMISSIONER FOR PATENTS
P.O. Box 1450
Alexandria, Virginia 22313-1450
www.uspto.gov

APPLICATION NO.	FILING DATE	FIRST NAMED INVENTOR	ATTORNEY DOCKET NO.	CONFIRMATION NO.
12/120,835	05/15/2008	Brendan Clarke Bull	ROC920080252US1 (105109)	5759

78148 7590 08/07/2008
KING & SPALDING
1180 PEACHTREE ST.
ATLANTA, GA 30309

EXAMINER
DAM, TUAN QUANG

ART UNIT	PAPER NUMBER
2192	

MAIL DATE	DELIVERY MODE
08/07/2008	PAPER

Please find below and/or attached an Office communication concerning this application or proceeding.

The time period for reply, if any, is set in the attached communication.

UNITED STATES PATENT AND TRADEMARK OFFICE

Commissioner for Patents
United States Patent and Trademark Office
P.O. Box 1450
Alexandria, VA 22313-1450
www.uspto.gov

August 4, 2008

ENTER ATTY NAME
ADDRESS

In re Application of:
Brendan Clarke Bull et al.
Serial No.: 12/120,835
Filed: May 15, 2008
Docket: ROC920080252US1 (105109)
Title: METHOD FOR DISTRIBUTING TRANSLATED RESOURCES FROM A UNIFIED SOURCE

DECISION ON PETITION TO MAKE SPECIAL FOR NEW APPLICATION UNDER 37 C.F.R. § 1.102 & M.P.E.P. § 708.02

This is a decision on the petition filed on May 15, 2008 to make the above-identified application special for accelerated examination procedure under 37 C.F.R. § 1.102(d).

The petition to make the application special is **DISMISSED**.

REGULATION AND PRACTICE

A grantable petition to make special under 37 C.F.R. § 1.102(d) and pursuant to the "Change to Practice for Petitions in Patent Applications to Make Special and for Accelerated Examination" published in the Federal Register on June 26, 2006 (71 Fed. Reg. 36323), must satisfy the following conditions:

I. Conditions Regarding the Application:

1. the application must be a non-reissue utility or design application filed under 37 CFR 1.111(a);
2. the application, the petition and the required fees must be filed electronically using the USPTO's electronic filing system (EFS), or EFS-web; if not filed electronically, a statement asserting that EFS and EFS-web were not available during the normal business hours.
3. at the time of filing, the application must be complete under 37 CFR 1.51 and in condition for examination;
4. the application must contain three or fewer independent claims and twenty or fewer total claims and the claims must be directed to a single invention.

II. Conditions Regarding the Petition:

The petition must:

1. be filed with the application;

2. include a statement that applicant agrees not to separately argue the patentability of any independent claim during any appeal in the application;

3. include a statement that applicant agrees to make an election without traverse in a telephone interview.

4. include a statement that applicant agrees to conduct such an interview when requested by the examiner.

5. include a statement, made based on a good faith belief, that a preexamination search in compliance with the following requirements, was conducted, including an identification of the filed of search by United States class and subclass, where applicable, and for database searches, the search logic or chemical structure or sequence used as a query, the name of the file(s) searched and the database service, and the date of the search.

The preexamination search must:

5.1 involve U.S. patents and patent application publications, foreign patent documents, and non-patent literature, unless the applicant can justify with reasonable certainty that no references more pertinent than those already identified are likely to be found in the eliminated sources and includes such a justification with this statement;

5.2. be directed to the claimed invention and encompass all of the features of the claims, giving the claims the broadest reasonable expectation;

5.3. encompass the disclosed features that may be claimed.

6. must provide in support of the petition an accelerated examination support document. An accelerated examination support document must include:

6.1. an information disclosure statement (IDS) in compliance with 37 CFR 1.98 citing each reference deemed most closely related to the subject matter of each of the claims;

6.2. an identification of all the limitations in the claims that are disclosed by the reference specifying where the limitation is disclosed in the cited reference;

6.3. a detailed explanation of how each of the claims are patentable over the references cited with particularity required by 37 CFR 1.111(b) and (c);

6.4. a concise statement of the utility of the invention as defined in each of the independent claims (unless the application is a design application);

6.5. a showing of where each limitation of the claims finds support under 35 USC 112, first paragraph, in the written description of the specification. If applicable, the showing must also identify: (1) each means- (or step) plus-function claim element that invokes consideration under 35 UDC 112, sixth paragraph; and (2) the structure, material, or acts in the specification that corresponds to each means- (or step) plus-function claim element that invokes consideration under 35 UDC 112, sixth paragraph; if the application claims the benefit of one or more applications under title 35, United States Code, the showing must also include where each limitation of the claims finds support under 35 USC 112, first paragraph, in each such application in which such supports exists;

6.6. an identification of any cited references that may be disqualified under 35 USC 103(c).

REVIEW OF FACTS

The conditions I1-I4, II1-II4, II5, II5.2, II5.3, II6.1, II6.3-II6.4, and II6.6 above are met. However, the petition fails to comply with conditions II5.2, II6.2 and II6.5 above. Therefore, the petition fails to meet the required conditions to be accorded special status under the accelerated examination procedure.

Regarding the requirement of MPEP § 708.02(a)(I.)(H)[1] and item II.5.2 above, the pre-examination search must be directed to the (instant) claimed invention. Text searches of section (A) of the Pre-examination Search Document should cover individual features of the claims themselves as well as a combination of features. The text search for US and foreign documents as well as for non-patent literature should include appropriate terms, Boolean operators, truncations, and proximities if applicable.

The broadest reasonable interpretation of claimed invention is that it relates to a translation system. Therefore the following areas should be included in the class/subclass search:

Class 704 subclass 9 directed to natural language translation systems
Class 700 subclass 802; and
Class 717subclass 136, 137 translation of code

In addition, it is unclear from the record, if features relied upon for patentability have been included in the text search. For example, element (a) is listed as one of the three elements of claim 1 missing from the prior art. However, the search strategies currently employed do not appear to have included this feature. Petitioner is reminded that a search of the claimed features both individually and in combination should be made. The following terms are suggested as part of text search strategy:

GUID (Global Unique ID);
(mapp$3 or translat$3) near10 (global near5 (key or unique));
(import$3 or export$3) near5 (common near5 format)

It should be noted that the above suggested language is not intended to be exhaustive of all appropriate searches for feature (a) but is provided as an example only. In addition, Petitioner is reminded that two other claimed features are relied upon for patentability. Clarification and/or correction are required.

Examples of various search strategies can be found on USPTO website, using the link http://www.uspto.gov/web/patents/accelerated/ and clicking on "Sample Accelerated Examination Support Document".

Regarding the requirement of MPEP § 708.02(a)(I.)(I)(3) and item II.6.2 above, the accelerated examination support document must include an identification of all the limitations in the claims that are disclosed by the reference specifying where the limitation is disclosed in the cited reference. Item 6.8 as discussed above, requires that an identification of the claimed limitations

[1] MPEP 8th ed. rev 6 September 2007

that are found in references deemed most closely related. Instead, a general discussion of the references is provided. Clarification is required

Finally, with respect to the requirement of MPEP § 708.02(a)(I.)(I)(5) and item II.6.5 above, the Accelerated Examination Support Document must provide a showing of where each limitation of the claims finds support under 35 USC 112, first paragraph, in the written description of the specification. Section 9(E) of the Examination Support Document generally directs attention to several paragraphs and figures without associating each paragraph and figure to a specific claimed feature. In addition, use of the phrase "at least" makes it unclear if the citations listed provide the complete basis of support. Clarification of whether passages and figures listed provide a complete basis of support and identification of support **for each claim limitation** is required.

DECISION

For the above-stated reasons, the petition is **Dismissed**. The application will therefore be taken up by the examiner for action in its regular turn.

Petitioner is given a single opportunity to perfect the petition. Any request for reconsideration of this decision must be submitted within 1 (one) month or 30 (thirty) days, whichever is longer, (no extension of time under 37 CFR 1.136(a)) from the date of this decision in order to be considered timely. Any request for reconsideration must address the deficiencies indicated above.

Petitioner is reminded that, upon granting of the special status of the application on request for reconsideration, the application will be processed expeditiously. However, due to the dismissal of the instant petition, examination may not be completed within twelve months of the filing date of the application.

Any inquiry regarding this decision should be directed Gail Hayes, Quality Assurance Specialist, at (571) 272-3591.

/Gail Hayes/

Gail Hayes, Quality Assurance Specialist
Technology Center 2100

UNITED STATES PATENT AND TRADEMARK OFFICE

UNITED STATES DEPARTMENT OF COMMERCE
United States Patent and Trademark Office
Address: COMMISSIONER FOR PATENTS
P.O. Box 1450
Alexandria, Virginia 22313-1450
www.uspto.gov

APPLICATION NO.	FILING DATE	FIRST NAMED INVENTOR	ATTORNEY DOCKET NO.	CONFIRMATION NO.
12/120,835	05/15/2008	Brendan Clarke Bull	ROC920080252US1 (105109)	5759

78148 7590 02/23/2009
KING & SPALDING
1180 PEACHTREE ST.
ATLANTA, GA 30309

EXAMINER
DAM, TUAN QUANG

ART UNIT	PAPER NUMBER
2192	

MAIL DATE	DELIVERY MODE
02/23/2009	PAPER

Please find below and/or attached an Office communication concerning this application or proceeding.

The time period for reply, if any, is set in the attached communication.

UNITED STATES PATENT AND TRADEMARK OFFICE

Commissioner for Patents
United States Patent and Trademark Office
P.O. Box 1450
Alexandria, VA 22313-1450
www.uspto.gov

February 22, 2009

John M. Harrington
King & Spalding LLP
1180 Peachtree Street
Atlanta, GA 30309

In re Application of: Bull Brendan Clarke et al. Serial No.: 12/120835 Filed: 05/15/2008 Docket: ROC920080252US1 (105109) Title: METHOD FOR DISTRIBUTING TRANSLATED RESOURCES FROM A UNIFIED SOURCE	DECISION ON PETITION TO MAKE SPECIAL FOR NEW APPLICATION UNDER 37 C.F.R. § 1.102 & M.P.E.P. § 708.02

This is a decision on the request for reconsideration filed on September 5, 2008 to make the above-identified application special for accelerated examination procedure under 37 C.F.R. § 1.102(d).

The petition to make the application special is **GRANTED**.

REGULATION AND PRACTICE

A grantable petition to make special under 37 C.F.R. § 1.102(d) and pursuant to the "Change to Practice for Petitions in Patent Applications to Make Special and for Accelerated Examination" published in the Federal Register on June 26, 2006 (71 Fed. Reg. 36323), must satisfy conditions I1-I4, II1-II4, II5.1-II5.3, and II.6.1-II6.6 listed in the original decision.

REVIEW OF FACTS

The conditions I1-I4, II1-II4, II5.1-II5.3, and II.6.1-II6.6 above are met. Therefore, the petition meets the required conditions to make the above-identified application special for accelerated examination procedure under 37 C.F.R. § 1.102(d).

DECISION

For the above-stated reasons, the petition is **Granted**.

The application is eligible for accelerated examination and the petition complies with the conditions for granting the application special status pursuant to the "Change to Practice for Petitions in Patent Applications to Make Special and for Accelerated Examination" published June 26, 2006, in the Federal Register. (71 Fed. Reg. 36323).

The prosecution of the instant application will be conducted expeditiously according to the following guidelines.

1. The application will be docketed to an examiner and taken up for action within two weeks of the date of this decision.

2. Restriction Practice:
   If the examiner determines that the claims are not directed to a single invention, a telephone request to elect one single invention will be made pursuant to MPEP 812.01. As a prerequisite to the grant of this petition, the applicant has agreed to make an oral election, by telephone, without traverse. If the applicant refuses to make an election without traverse, or the examiner cannot reach the applicant after a reasonable effort, the examiner will treat the first claimed invention (invention defined by claim 1) as having being constructively elected without traverse for examination.

3. Office action:
   If it is determined that, after appropriate consultation, there is a potential rejection or any other issue to be addressed, the examiner will telephone the applicant and arrange an interview to discuss and resolve the issue. An Office action, other than a Notice of Allowance and Fee(s) Due (Notice of Allowance), will not be issued unless either: 1) an interview was conducted but did not result in agreed to action that places the application in condition for allowance, or, 2) a determination is made that an interview would be unlikely to result in the application being placed in condition for allowance, and 3) an internal conference has been held to review any rejection of any claim.

4. Time for Reply:
   An Office action other than a Notice of Allowance or a final Office action will set a shortened statutory period of one month or thirty days, whichever is longer, for reply with no extension of time available under 37 CFR 1.136(a). Failure to timely file a reply within this non-extendible period for reply will result in the abandonment of the application.

5. Reply by Applicant:
   A timely reply to an Office action other than the Notice of Allowance must be submitted electronically via EFS or EFS-web and limited to addressing the rejections, objections and requirement made. Any amendment that attempts to: 1) add claims which would result in more than three pending independent claims or more than twenty pending total claims; 2) present claims not encompassed by the pre-examination search or an updated accelerated examination support document; or 3) present claims that are directed a non-elected invention or an invention other than that previously claimed and examined in the application, will be treated as not fully responsive and will not be entered.

For any amendment to the claims (including any new claim) that is not encompassed by the accelerated examination support document, applicant must provide an updated accelerated examination support document that encompasses the amended or new claims at the time of filing of the amendment.

To proceed expeditiously with the examination, it is recommended that a reply with amendments made to any claim or with any new claim being added be accompanied by an updated accelerated examination support document or a statement explaining how the amended or new claim is supported by the original accelerated examination support document.

6. Information Disclosure Statement (IDS):
   Any IDS filed during prosecution must be submitted electronically via EFS or EFS-web, accompanied by an updated accelerated examination support document, and be in compliance with 37 CFR 1.97 and 1.98.

7. Post-Allowance Processing:
   To expedite processing of the allowed application into a patent, the applicant must: 1) pay the required fees within one month of the date of the Notice of Allowance, and 2) not file any post allowance papers not required by the Office. In no event may the issue fee be paid and accepted later than three months from the date of the Notice of Allowance.

8. After-Final and Appeal Procedures:
   To expedite prosecution, after receiving the final Office action, applicant must: 1) promptly file a notice of appeal, an appeal brief and appeal fees; and 2) not request a pre-appeal brief conference.

   Any amendment, affidavit or other evidence filed after final Office action must comply with applicable rules and the requirements outlined in numbered paragraphs 5 and 6 above.

   On appeal, the application will proceed according to normal appeal procedures. After appeal, the application will again be treated special.

9. Proceedings Outside the Normal Examination Process:
   If the application becomes involved in a proceeding that is outside the normal examination process (e.g., a secrecy order, national security review, interference proceeding, petitions under 37 CFR 1.181, 182 or 183), the application will be treated special before and after such proceeding.

10. Final Disposition:
    The twelve-month goal of this accelerated examination procedure ends with a final disposition. The mailing of a final Office action, a Notice of Allowance, the filing of a Notice of Appeal, or the filing of a Request for Continued Examination (RCE) is the final disposition.

If, during prosecution, a paper is not filed electronically using EFS-web, a reply is filed but is not fully responsive, the application is involved in an appeal, or a proceeding outside normal examination process, the application will still be examined expeditiously, however, the final disposition may occur more than twelve months from the filing of the application.

Any inquiry regarding this decision should be directed Gail Hayes, Quality Assurance Specialist, at (571) 272-3591.

/Gail Hayes/

Gail Hayes, Quality Assurance Specialist
Technology Center 2100

UNITED STATES PATENT AND TRADEMARK OFFICE

COMMISSIONER FOR PATENTS
UNITED STATES PATENT AND TRADEMARK OFFICE
P.O. BOX 1450
ALEXANDRIA, VA 22313-1450
WWW.USPTO.GOV

Paper No.

LADAS & PARRY
5670 WILSHIRE BOULEVARD, SUITE 2100
LOS ANGELES CA 90036-5679

MAILED

JUN 21 2010

OFFICE OF PETITIONS

In re Application of :
Divisi :
Application No. 12/120,869 :
In re Patent No. 7,688,065 :
Filing Date: May 15, 2008 :
Issue Date: March 30, 2010 :
Attorney Docket Number: B-6471 :
624901-8 :
Title: PISTON STROKE COUNTING :
DEVICE :

DECISION ON PETITION PURSUANT TO 37 C.F.R. § 3.81(B)

This is a decision on the "PETITION UNDER 37 C.F.R. § 3.81(b) WITH REQEUST FOR CERTIFICATE OF CORRECTION," filed February 10, 2010, to correct the Assignee's information on the Issue Fee Transmittal Form PTOL-85(b).

The petition is **GRANTED**.

With this petition, Petitioner requests that a Certificate of Correction be issued to correct the assignee information that appears on the face of the patent. On February 10, 2010, Petitioner submitted a "Certificate of Correction" for this purpose, which requests that the assignee be listed as Dropsa S.P.A., Milano, Italy."

37 C.F.R. §3.81(b), effective June 25, 2004, reads:

> (b) After payment of the issue fee: Any request for issuance of an application in the name of the assignee submitted after the date of payment of the issue fee, and any request for a patent to be corrected to state the name of the assignee, must state that the assignment was submitted for recordation as set forth in 3.11 before issuance of the patent, and must include a request for a certificate of correction under 1.323 of this chapter (accompanied

by the fee set forth in 1.20(a)) and the processing fee set forth in 1.17(i) of this chapter.

Petitioner has set forth that the assignment was submitted for recordation as set forth in 37 C.F.R. § 3.11 before issuance of the patent, and Office records confirm that an assignment was received in the Office on February 3, 2010, listing Dropsa S.P.A. as the assignee.

Payment of the required $100 certificate of correction fee and the $130 processing fee is acknowledged.

The Certificates of Correction Branch will be notified of this decision so that the requested Certificate of Correction can be issued.

Telephone inquiries regarding *this decision* should be directed to the undersigned at (571) 272-3225. Any questions concerning the issuance of a certificate of correction should be directed to the Certificates of Correction Branch at (703) 305-8309.

/Paul Shanoski/
Paul Shanoski
Senior Attorney
Office of Petitions

UNITED STATES PATENT AND TRADEMARK OFFICE

UNITED STATES DEPARTMENT OF COMMERCE
United States Patent and Trademark Office
Address: COMMISSIONER FOR PATENTS
P.O. Box 1450
Alexandria, Virginia 22313-1450
www.uspto.gov

APPLICATION NO.	FILING DATE	FIRST NAMED INVENTOR	ATTORNEY DOCKET NO.	CONFIRMATION NO.
12/120,883	05/15/2008	Travis M. Grigsby	RSW920080293US1	5850

75339 7590 06/13/2008
PATENTS ON DEMAND, P.A.
4581 WESTON ROAD
SUITE 345
WESTON, FL 33331

EXAMINER

ART UNIT	PAPER NUMBER
3661	

MAIL DATE	DELIVERY MODE
06/13/2008	PAPER

Please find below and/or attached an Office communication concerning this application or proceeding.

The time period for reply, if any, is set in the attached communication.

UNITED STATES PATENT AND TRADEMARK OFFICE

Commissioner for Patents
United States Patent and Trademark Office
P.O. Box 1450
Alexandria, VA 22313-1450
www.uspto.gov

MAILED
FROM DIRECTORS OFFICE

JUN 13 2008

TECHNOLOGY CENTER 3600

Patents on Demand, P.A.
4581 Weston Road
Suite 345
Weston, FL 33331

In re application of
Travis M. Grigsby et al.
Application No. 12/120,883
Filed: May 15, 2008
For: INFERRING STATIS TRAFFIC ARTIFACT PRESENCE, LOCATION, AND SPECIFICS FROM AGGREGATED NAVIGATION SYSTEM DATA

DECISION ON PETITION TO MAKE SPECIAL FOR NEW APPLICATION UNDER 37 CFR 1.102

This is a decision on the petition filed on May 15, 2008 to make the above-identified application special for accelerated examination procedure under 37 C.F.R. § 1.102(d).

The petition to make the application special is **DISMISSED**.

REGULATION AND PRACTICE

A grantable petition to make special under 37 C.F.R. § 1.102(d) and pursuant to the "Change to Practice for Petitions in Patent Applications to Make Special and for Accelerated Examination" published in the Federal Register on June 26, 2006 (71 Fed. Reg. 36323), must satisfy the following conditions:

I. Conditions Regarding the Application:

1. the application must be a non-reissue utility or design application filed under 37 CFR 1.111(a);

2. the application, the petition and the required fees must be filed electronically using the USPTO's electronic filing system (EFS), or EFS-web; if not filed electronically, a statement asserting that EFS and EFS-web were not available during the normal business hours.

3. at the time of filing, the application must be complete under 37 CFR 1.51 and in condition for examination;

4. the application must contain three or fewer independent claims and twenty or fewer total claims and the claims must be directed to a single invention.

II. Conditions Regarding the Petition:

The petition must:

1. be filed with the application;

2. include a statement that applicant agrees not to separately argue the patentability of any independent claim during any appeal in the application;

3. include a statement that applicant agrees to make an election without traverse in a telephone interview.

4. include a statement that applicant agrees to conduct such an interview when requested by the examiner.

5. include a statement, made based on a good faith belief, that a preexamination search in compliance with the following requirements, was conducted, including an identification of the field of search by United States class and subclass, where applicable, and for database searches, the search logic or chemical structure or sequence used as a query, the name of the file(s) searched and the database service, and the date of the search.

The preexamination search must:

5.1 involve U.S. patents and patent application publications, foreign patent documents, and non-patent literature, unless the applicant can justify with reasonable certainty that no references more pertinent than those already identified are likely to be found in the eliminated sources and includes such a justification with this statement;

5.2. be directed to the claimed invention and encompass all of the features of the claims, giving the claims the broadest reasonable expectation;

5.3. encompass the disclosed features that may be claimed.

6. must provide in support of the petition an accelerated examination support document.

An accelerated examination support document must include:

6.1. an information disclosure statement (IDS) in compliance with 37 CFR 1.98 citing each reference deemed most closely related to the subject matter of each of the claims;

6.2. an identification of all the limitations in the claims that are disclosed by the reference specifying where the limitation is disclosed in the cited reference;

6.3. a detailed explanation of how each of the claims are patentable over the references cited with particularity required by 37 CFR 1.111(b) and (c);

6.4. a concise statement of the utility of the invention as defined in each of the independent claims (unless the application is a design application);

6.5. a showing of where each limitation of the claims finds support under 35 USC 112, first paragraph, in the written description of the specification. If applicable, the showing must also identify: (1) each means- (or step) plus-function claim element that invokes consideration under 35 UDC 112, sixth paragraph; and (2) the structure, material, or acts in the specification that corresponds to each means- (or step) plus-function claim element that invokes consideration under 35 UDC 112, sixth paragraph; if the application claims the benefit of one or more applications under title 35,

United States Code, the showing must also include where each limitation of the claims finds support under 35 USC 112, first paragraph, in each such application in which such supports exists;
6.6. an identification of any cited references that may be disqualified under 35 USC 103(c).

REVIEW OF FACTS

The petition in this case fails to comply with conditions II.5.2, II.6.2 and II.6.3, above.

As to condition II.5.2, the petition lacks an indication of a preexamination search that encompasses all of the features of the claims. Specifically, applicant has listed 4 US classes (class 364, furthermore, does not exist) and 10 foreign classes that were searched. This would indicate that every patent in every subclass of each of the 4 classes had been reviewed. It is doubtful that such is the case. If that is the case, a statement on the record stating such should be made. If not, the specific subclasses that applicant reviewed needs to be listed, since the specifics of the required classification search needs to be supplied. With respect to the classification search, in addition to any areas already searched, the search needs to include at least a search of 701/116 (where the application is classified), 1, 117-118, 200, 207, 213; 340/ 995, 995.13, 909, 907, 917, 919, 920, and 922; as well as 342/357.13, 454, and 457.

With respect to the required text search of the US Patents database, the search logic used by the applicant does not appear to include enough search terms to cover the claimed limitations and thus may not have located all of the most pertinent art. Search logic encompassing the "broadest reasonable interpretation" of the claimed invention is required. The USPTO website has an example of the proper manner of performing and documenting a preexamination search for Accelerated Examination petitions at: http://www.uspto.gov/web/patents/accelerated/. Additionally, an example of an additional text search is provided below:

> (automobile or car or vehicle) same GPS same navigat$3 same (traffic near3 (light or sign or zone or crossing)) same (information or data or artifact or analy$3)

The sample of search terms are not meant to be the sole search terms that can or should be employed in this application, but is meant solely as an example for applicant's assistance. The same additions shown above for the text search can also be used in the search of foreign databases and NPL search.

As to condition II.6.2, an AESD that contains a list of references in the information disclosure statement (IDS) of the AESD, but does not include any identification and explanation for those references that are not required to be submitted in the IDS of the AESD (*i.e.*, references that are not most closely related to the subject matter of each of the claims), will be deemed insufficient for lack of identification and explanation. If applicant wishes to cite references that

are not required in an AESD for the examiner to consider, applicant may submit such references in a separate IDS in compliance with 37 CFR 1.97 and 1.98. Applicant should clearly identify the IDS of the AESD that is in support of the petition to make special and, similarly, applicant should clearly identify the separate IDS that is not in support of the petition. Consistent with 37 CFR 10.18, any reference submitted in a separate IDS that is not part of an AESD will be treated as a representation by applicant to the USPTO that no reference submitted in the separate IDS is deemed closer to the subject matter of at least one claim than the references provided in the AESD.

A supplemental AESD is required if a reference being submitted in an IDS is deemed more closely related to the subject matter of at least one claim than the references provided in the previously-filed AESD. Consistent with 37 CFR 10.18, any reference submitted in a separate IDS that is not part of an AESD is a representation by applicant to the USPTO that no reference submitted in the separate IDS is deemed closer to the subject matter of at least one claim than the references provided in the AESD. If applicant deems references found after the initial filing to be closer to the subject matter of at least one claim than the references provided in the AESD, then applicant needs to supplement the AESD to account for these references.

Applicant is required to submit an accelerated examination support document (AESD) that includes an IDS in compliance with 37 CFR 1.98 citing each reference deemed most closely related to the subject matter of each of the claims (whether in independent or dependent form). Specifically:

> **(1)** Applicant **is not** required to cite the references that are only relevant to the general subject matter of the claims because there are references that are more closely related to the subject matter of the claims. Applicant is also not required to cite a reference that is cumulative to any other reference cited in the IDS.
> **(2)** Applicant **is** required to cite any reference that establishes, by itself or in combination with other information, a prima facie case of unpatentability of a claim (see 37 CFR 1.56(b)) in the IDS of the AESD.
> **(3)** Applicant **is** required to cite the reference that discloses the most limitations in the independent claim.
> **(4)** Applicant **is** required to cite any reference that discloses a limitation of an independent claim that is not shown in the other references.
> **(5)** Applicant **is** required to cite any reference that discloses a limitation of a dependent claim that is not shown in the other references.

Currently, since it is required that the most closely related references are to be submitted with the petition, all 21 of the references submitted are considered to be "most closely related" and need to be completely addressed in the Support Document. There currently is not an adequate listing of all the limitations (or portions thereof) in the claim that are disclosed in each of the cited references, specifying where each of the limitations (or portions thereof) are disclosed in each of the references.

As to condition II.6.3, there is not a satisfactory detailed explanation of claim patentability over each of the references. The explanation needs to specify how each of the claims (not just the independent claims or selected dependent claims) are patentable over each of the cited references, which includes the need to specify whether each of the dependent claims are separately patentable beyond the limitations contained in the independent claims, and if so how, or a statement made that the dependent claims are not separately patentable. Specifically, at least some of the dependent claims appear to have at least some of their limitations admittedly taught by the cited prior art. In addition, any indication of patentability over the prior art references needs to take in to account any distinctions seen as being obvious over any single or a combination of cited references.

The USPTO website has an example of the proper manner of documenting limitations taught by cited art, and the manner of explaining claim patentability over the references, for an Accelerated Examination Support Document at: http://www.uspto.gov/web/patents/accelerated/.

Therefore, the petition fails to meet the required conditions to be accorded special status under the accelerated examination procedure.

DECISION

For the above-stated reasons, the petition is **DISMISSED**. The application will therefore be taken up by the examiner for action in its regular turn.

Petitioner is given a single opportunity to perfect the petition. Any request for reconsideration of this decision must be submitted within 1 (one) month or 30 (thirty) days, whichever is longer, (no extension of time under 37 CFR 1.136(a)) from the date of this decision in order to be considered timely. Any request for reconsideration must address the deficiencies indicated above.

Petitioner is reminded that, upon granting of the special status of the application on request for reconsideration, the application will be processed expeditiously. However, due to the dismissal of the instant petition, examination may not be completed within twelve months of the filing date of the application.

Any inquiry regarding this decision should be directed to Quality Assurance Specialist Steven N. Meyers, at (571) 272-6611.

Steven N. Meyers,
Quality Assurance Specialist
Technology Center 3600

Sm/sm: 6/12/08

UNITED STATES PATENT AND TRADEMARK OFFICE

UNITED STATES DEPARTMENT OF COMMERCE
United States Patent and Trademark Office
Address: COMMISSIONER FOR PATENTS
P.O. Box 1450
Alexandria, Virginia 22313-1450
www.uspto.gov

APPLICATION NO.	FILING DATE	FIRST NAMED INVENTOR	ATTORNEY DOCKET NO.	CONFIRMATION NO.
12/120,883	05/15/2008	Travis M. Grigsby	RSW920080293US1	5850

75339 7590 07/23/2008
PATENTS ON DEMAND, P.A.
4581 WESTON ROAD
SUITE 345
WESTON, FL 33331

EXAMINER

ART UNIT	PAPER NUMBER
3661	

MAIL DATE	DELIVERY MODE
07/23/2008	PAPER

Please find below and/or attached an Office communication concerning this application or proceeding.

The time period for reply, if any, is set in the attached communication.

UNITED STATES PATENT AND TRADEMARK OFFICE

Commissioner for Patents
United States Patent and Trademark Office
P.O. Box 1450
Alexandria, VA 22313-1450
www.uspto.gov

MAILED
FROM DIRECTORS OFFICE

JUL 22 2008

TECHNOLOGY CENTER 3600

Patents on Demand, P.A.
4581 Weston Road
Suite 345
Weston, FL 33331

In re application of
Travis M. Grigsby et al.
Application No. 12/120,883
Filed: May 15, 2008
For: INFERRING STATIS TRAFFIC ARTIFACT PRESENCE, LOCATION, AND SPECIFICS FROM AGGREGATED NAVIGATION SYSTEM DATA

: **DECISION ON PETITION**
: **TO MAKE SPECIAL FOR**
: **NEW APPLICATION**
: **UNDER 37 CFR 1.102**

This is a decision on the renewed petition filed on July 14, 2008 to make the above-identified application special for accelerated examination procedure under 37 C.F.R. § 1.102(d).

The petition to make the application special is **GRANTED**.

The application is eligible for accelerated examination and the petition complies with the conditions for granting the application special status pursuant to the "Change to Practice for Petitions in Patent Applications to Make Special and for Accelerated Examination" published June 26, 2006, in the Federal Register. (71 Fed. Reg. 36323).

The prosecution of the instant application will be conducted expeditiously according to the following guidelines.

1. The application will be docketed to an examiner and taken up for action within two weeks of the date of this decision.

2. Restriction Practice:
If the examiner determines that the claims are not directed to a single invention, a telephone request to elect one single invention will be made pursuant to MPEP 812.01. As a prerequisite to the grant of this petition, the applicant has agreed to make an oral election, by telephone, without traverse. If the applicant refuses to make an election without traverse, or the examiner cannot reach the applicant after a reasonable effort, the examiner will treat the first claimed invention

(invention defined by claim 1) as having being constructively elected without traverse for examination.

3. Office action:
If it is determined that, after appropriate consultation, there is a potential rejection or any other issue to be addressed, the examiner will telephone the applicant and arrange an interview to discuss and resolve the issue. An Office action, other than a Notice of Allowance and Fee(s) Due (Notice of Allowance), will not be issued unless either: 1) an interview was conducted but did not result in agreed to action that places the application in condition for allowance, or, 2) a determination is made that an interview would be unlikely to result in the application being placed in condition for allowance, and 3) an internal conference has been held to review any rejection of any claim.

4. Time for Reply:
An Office action other than a Notice of Allowance or a final Office action will set a shortened statutory period of one month or thirty days, whichever is longer, for reply with no extension of time available under 37 CFR 1.136(a). Failure to timely file a reply within this non-extendible period for reply will result in the abandonment of the application.

5. Reply by Applicant:
A timely reply to an Office action other than the Notice of Allowance must be submitted electronically via EFS or EFS-web and limited to addressing the rejections, objections and requirement made. Any amendment that attempts to: 1) add claims which would result in more than three pending independent claims or more than twenty pending total claims; 2) present claims not encompassed by the pre-examination search or an updated accelerated examination support document; or 3) present claims that are directed to a non-elected invention or an invention other than that previously claimed and examined in the application, will be treated as not fully responsive and will not be entered.

For any amendment to the claims (including any new claim) that is not encompassed by the accelerated examination support document, applicant must provide an updated accelerated examination support document that encompasses the amended or new claims at the time of filing of the amendment.

To proceed expeditiously with the examination, it is recommended that a reply with amendments made to any claim or with any new claim being added be accompanied by an updated accelerated examination support document or a statement explaining how the amended or new claim is supported by the original accelerated examination support document.

6. Information Disclosure Statement (IDS):
Any IDS filed during prosecution must be submitted electronically via EFS or EFS-web, accompanied by an updated accelerated examination support document, and be in compliance with 37 CFR 1.97 and 1.98.

7. Post-Allowance Processing:

To expedite processing of the allowed application into a patent, the applicant must: 1) pay the required fees within one month of the date of the Notice of Allowance, and 2) not file any post allowance papers not required by the Office. In no event may the issue fee be paid and accepted later than three months from the date of the Notice of Allowance.

8. After-Final and Appeal Procedures:
To expedite prosecution, after receiving the final Office action, applicant must: 1) promptly file a notice of appeal, an appeal brief and appeal fees; and 2) not request a pre-appeal brief conference.

Any amendment, affidavit or other evidence filed after final Office action must comply with applicable rules and the requirements outlined in numbered paragraphs 5 and 6 above.

On appeal, the application will proceed according to normal appeal procedures. After appeal, the application will again be treated special.

9. Proceedings Outside the Normal Examination Process:
If the application becomes involved in a proceeding that is outside the normal examination process (e.g., a secrecy order, national security review, interference proceeding, petitions under 37 CFR 1.181, 182 or 183), the application will be treated special before and after such proceeding.

10. Final Disposition:
The twelve month goal of this accelerated examination procedure ends with a final disposition. The mailing of a final Office action, a Notice of Allowance, the filing of a Notice of Appeal, or the filing of a Request for Continued Examination (RCE) is the final disposition.

If, during prosecution, a paper is not filed electronically using EFS-web, a reply is filed but is not fully responsive, the application is involved in an appeal, or a proceeding outside normal examination process, the application will still be examined expeditiously, however, the final disposition may occur more than twelve months from the filing of the application.

Any inquiry regarding this decision should be directed to Quality Assurance Specialist Steven N. Meyers, at (571) 272-6611.

Steven N. Meyers,
Quality Assurance Specialaist
Technology Center 3600

Sm/sm: 7/22/08

UNITED STATES PATENT AND TRADEMARK OFFICE

Commissioner for Patents
United States Patent and Trademark Office
P.O. Box 1450
Alexandria, VA 22313-1450
www.uspto.gov

STEPTOE & JOHNSON - ACCLARENT, INC.
2121 AVENUE OF THE STARS
SUITE 2800
LOS ANGELES CA 90067

MAILED

JUN 10 2010

OFFICE OF PETITIONS

In re Application of	:	
Bruce B. Becker	:	
Application No. 12/120,902	:	DECISION GRANTING PETITION
Filed: May 15, 2008	:	UNDER 37 CFR 1.313(c)(2)
Attorney Docket No. 83529.0053	:	

This is a decision on the petition under 37 CFR 1.313(c)(2), filed, June 9, 2010 to withdraw the above-identified application from issue after payment of the issue fee.

The petition is **GRANTED**.

The above-identified application is withdrawn from issue for consideration of a submission under 37 CFR 1.114 (request for continued examination). *See* 37 CFR 1.313(c)(2).

Petitioner is advised that the issue fee paid on May 27, 2010 cannot be refunded. If, however, this application is again allowed, petitioner may request that it be applied towards the issue fee required by the new Notice of Allowance.[1]

Telephone inquiries should be directed to Terri Johnson at (571) 272-2991.

This application is being referred to Technology Center AU 3734 for processing of the request for continued examination under 37 CFR 1.114 and for consideration of the concurrently filed information disclosure statement.

Terri Johnson
Petitions Examiner
Office of Petitions

---

[1] *The request to apply the issue fee to the new Notice may be satisfied by completing and returning the new Part B – Fee(s) Transmittal Form (along with any balance due at the time of submission). Petitioner is advised that the Issue Fee Transmittal Form* ***must*** *be completed and timely submitted to avoid abandonment of the application.*

UNITED STATES PATENT AND TRADEMARK OFFICE

UNITED STATES DEPARTMENT OF COMMERCE
United States Patent and Trademark Office
Address: COMMISSIONER FOR PATENTS
P.O. Box 1450
Alexandria, Virginia 22313-1450
www.uspto.gov

APPLICATION NO.	FILING DATE	FIRST NAMED INVENTOR	ATTORNEY DOCKET NO.	CONFIRMATION NO.
12/120,956	05/15/2008	Jeffrey C. BRAMAN	10070516-02	5965

7590 11/27/2009
AGILENT TECHOLOGIES INC
P.O BOX 7599
BLDG E , LEGAL
LOVELAND, CO 80537-0599

EXAMINER
KOONTZ, TAMMY J

ART UNIT	PAPER NUMBER
3974	

NOTIFICATION DATE	DELIVERY MODE
11/27/2009	ELECTRONIC

DECISION GRANTING PETITION UNDER 37 CFR 1.138(d)

The declaration of express abandonment is recognized

This is in response to the petition under 37 CFR 1.138(d), requesting for a refund of any previously paid search fee and excess claims fee in the above-identified application.

The petition is granted.

The express abandonment is recognized. Any previously paid search fee and excess claims fee are hereby refunded.

Telephone inquiries should be directed to the Office of Data Management at (571) 272-4200.

Betty Powell

Patent Publication Branch
Office of Data Management

FORM PET651G (Rev. 08/07)

UNITED STATES PATENT AND TRADEMARK OFFICE

Commissioner for Patents
United States Patent and Trademark Office
P.O. Box 1450
Alexandria, VA 22313-1450
www.uspto.gov

WOMBLE CARLYLE SANDRIDGE & RICE, PLLC
ATTN: PATENT DOCKETING 32ND FLOOR
P.O. BOX 7037
ATLANTA GA 30357-0037

COPY MAILED

AUG 2 6 2008

OFFICE OF PETITIONS

In re Patent of	:	
Fisher et al.	:	
Application No. 12/120985	:	DECISION
Filing or 371(c) Date: 05/15/2008	:	ON PETITION
Attorney Docket Number:	:	
S161 1030.2	:	

This is a decision on the Response to "Petition for Acceptance of Omitted Item Under 37 CFR 1.182, filed June 6, 2008, requesting the application be accorded a filing date of May 15, 2008, including drawing Figure 7.

The petition is **granted**.

Background

The application was filed on May 15, 2008. On May 27, 2008, the Office of Patent Application Processing (OPAP) mailed a Notice to File Corrected Application papers (hereinafter "Notice"), stating that the application had been accorded a filing; however, Figure 7 described in the specification appeared to have been omitted from the application.

Applicant files the present petition and avers that drawing Figure 7 was included on the same page as drawing Figure 2 filed with the application on May 15, 2008. In support of this assertion, Applicant provides a copy of the drawing Figure(s), and notes that the fdrawing can be viewed on the Office's Patent Application Information and Retrieval System (PAIR).

A review of the application papers filed on May 15, 2008, and of Figure 2 reveals that Figure 7 is also located on the same page.

The Notice was therefore mailed in error and is hereby withdrawn. The petition is granted.

The petition fee has been refunded to Applicant's deposit account as authorized in the petition.

The application will be returned to the Office of Patent Application Processing for continued processing with a filing date of May 15, 2008, and an indication that drawing Figure 7 was included among 18 pages of drawings filed with the application on May 15, 2008.

Telephone inquiries concerning this decision should be directed to the undersigned at (571) 272-3232.

/Derek L. Woods/
Derek L. Woods
Attorney
Office of Petitions

UNITED STATES PATENT AND TRADEMARK OFFICE

Commissioner for Patents
United States Patent and Trademark Office
P.O. Box 1450
Alexandria, VA 22313-1450
www.uspto.gov

MAILED

MAY 04 2010

OFFICE OF PETITIONS

HAYNES BEFFEL & WOLFELD LLP
P.O. BOX 366
HALF MOON BAY CA 94019

In re Patent No. 7,642,939	:	
Issue Date: January 5, 2010	:	
Application No. 12/120,988	:	NOTICE
Filed: May 15, 2008	:	
Attorney Docket No. SMPL 1011-1	:	

This is a notice regarding your request for acceptance of a fee deficiency submission under 37 CFR 1.28 submitted on January 27 2010.

The Office no longer investigates or rejects original or reissue patent under 37 CFR 1.56. **1098 Off. Gaz. Pat. Office 502 (January 3, 1989)**. Therefore, nothing in this Notice is intended to imply that an investigation was done.

Your fee deficiency submission under 37 CFR 1.28 is hereby **ACCEPTED**.

This patent is no longer entitled to small entity status. Accordingly, all future fees paid in this patent must be paid at the large entity rate.

Inquiries related to this communication should be directed to the undersigned at (571) 272-3208.

/KOC/
Karen Creasy
Petitions Examiner
Office of Petitions

UNITED STATES PATENT AND TRADEMARK OFFICE

Commissioner for Patents
United States Patent and Trademark Office
P.O. Box 1450
Alexandria, VA 22313-1450
www.uspto.gov

TOWNSEND AND TOWNSEND AND CREW, LLP
TWO EMBARCADERO CENTER, EIGHTH FLOOR
SAN FRANCISCO, CA 94111-3834

COPY MAILED

AUG 17 2009

OFFICE OF PETITIONS

In re Application of
Richard C. WINGERSON
Application No. 12/120,998
Filed: May 15, 2008
Docket No. 025770-000110US

DECISION ON PETITION

This is a decision on the petition under the unintentional provisions of 37 CFR 1.137(b), filed June 24, 2009, to revive the above-identified application.

The petition is **GRANTED**.

The application became abandoned for failure to reply in a timely manner to the non-final Office action mailed, August 29, 2008, which set a shortened statutory period for reply of three (3) months. No extensions of time under the provisions of 37 CFR 1.136(a) were obtained. Accordingly, the application became abandoned on November 30, 2008.

The petition satisfies the requirements of 37 CFR 1.137(b) in that petitioner has supplied (1) the reply in the form of an amendment, (2) the petition fee of $810; and (3) the required statement of unintentional delay.

It is not apparent whether the person signing the statement of unintentional delay was in a position to have firsthand or direct knowledge of the facts and circumstances of the delay at issue. Nevertheless, such statement is being treated as having been made as the result of a reasonable inquiry into the facts and circumstances of such delay. See 37 CFR 10.18(b) and Changes to Patent Practice and Procedure; Final Rule Notice, 62 Fed. Reg. 53131, 53178 (October 10, 1997), 1203 Off. Gaz. Pat. Office 63, 103 (October 21, 1997). In the event that such an inquiry has not been made, petitioner must make such an inquiry. If such inquiry results in the discovery that it is not correct that the entire delay in filing the required reply from the due

date for the reply until the filing of a grantable petition pursuant to 37 CFR 1.137(b) was unintentional, petitioner must notify the Office.

There is no indication that the person signing the petition was ever given a power of attorney to prosecute the application. If the person signing the petition desires to receive future correspondence regarding this application, the appropriate power of attorney document must be submitted. While a courtesy copy of this decision is being mailed to the person signing the petition, all future correspondence will be directed to the address currently of record until appropriate instructions are received.

Telephone inquiries concerning this decision should be directed to Diane Goodwyn at (571) 272-6735.

This application is being referred to Technology Center AU 3725 for appropriate action by the Examiner in the normal course of business.

Thurman K. Page

Thurman K. Page
Petitions Examiner
Office of Petitions

cc: DON D. CHA
547 BUENA VISTA ROAD
GOLDEN, CO 80401

UNITED STATES PATENT AND TRADEMARK OFFICE

Commissioner for Patents
United States Patent and Trademark Office
P.O. Box 1450
Alexandria, VA 22313-1450
www.uspto.gov

NANOSYS INC.
2625 HANOVER ST.
PALO, ALTO, CA 94304

COPY MAILED

JAN 16 2009

OFFICE OF PETITIONS

In re Application of Niu et al. :
Application No. 12/121,008 :
Filing Date: May 15, 2008 :
Attorney Docket No. 01-006311 :

Decision on Petition

This is a decision in response to the petition filed July 16, 2008, which requests the application be accorded a filing date of May 15, 2008, and requests entry of the drawings filed July 16, 2008. As will be discussed in this decision, the petition has been treated as a petition under 37 CFR 1.53.

The petition is **granted to the extent indicated herein**.

Procedural History:

On May 15, 2008, the application was inadvertently filed without drawings.

On July 11, 2008, the Office of Patent Application Processing mailed a "Notice of Incomplete Nonprovisional Application." The Notice stated drawings did not appear to be part of the application as filed and that a filing date would be accorded upon the submission of drawings.

On July 16, 2008, petitioner filed an amendment pursuant to 37 CFR 1.57(a), the instant petition, and a petition fee of $400. Petitioner requests the application include the inadvertently omitted drawings on the basis that the application as filed contained a proper priority claim under 37 CFR 1.78.

Discussion:

In order to add material pursuant to 37 CFR 1.57(a), one must always filed an amendment. However, a petition under 37 CFR 1.57 and the $400 fee is only necessary if the application is not entitled to a filing date absent the missing material.

As a courtesy, the Office has chosen to initially treat the petition as a petition under 37 CFR 1.53(e) in order to determine if the application should have been accorded a filing date without the drawings. If the application should have been accorded a filing date without the drawings, then a petition under 37 CFR 1.57 is unnecessary and the $400 fee is refundable.

A review of the application papers filed May 15, 2008, indicates the papers included thirteen method claims. MPEP 601.01(f) states,

> It has been USPTO practice to treat an application that contains at least one process or method claim as an application for which a drawing is not necessary for an understanding of the invention under 35 U.S.C. 113 (first sentence).

Pursuant to MPEP 601.01(f), drawings should not have been required in order to accord the application a filing date. In other words, the Office should have accorded the application a filing date without the drawings.

The Office should have granted the application a filing date of May 15, 2008, and mailed a Notice of Omitted Items instead of a Notice of Incomplete Nonprovisional Application. As stated in MPEP 601.01(g) under the section entitled, "Application Entitled to a Filing Date," applicant may submit an *amendment* to include the inadvertently omitted portion of the drawing(s) pursuant to 37 CFR 1.57(a):

> [If the] application was filed on or after September 21, 2004, and contains a claim under 37 CFR 1.55 for priority of a prior-filed foreign application, or a claim under 37 CFR 1.78 for the benefit of a prior-filed provisional, nonprovisional, or international application that was present on the filing date of the application, and the omitted portion of the drawing(s) was inadvertently omitted from the application and is completely contained in the prior-filed application.

Since the application is entitled to a filing date without the drawings, a petition under 37 CFR 1.57 and the petition fee of $400 has been refunded to petitioner's deposit account.

Although a petition and fee are not required to add the drawings, an amendment pursuant to 37 CFR 1.57(a) is required. Petitioner should note two sets of drawings were filed July 16, 2008. If an amendment is filed, petitioner may wish to submit one set of drawings with the amendment to ensure the correct set is entered.

A formal amendment to add the drawings should be filed. Please note an amendment pursuant to 37 CFR 1.57(a) must comply with the requirements of 37 CFR 1.121. For example, per 37 CFR 1.121(d), any new drawings added to an application must include in the top margin the label "New Sheet." Petitioner may wish to file a preliminary amendment to ensure the addition of the new drawings complies with the requirements of 37 CFR 1.121.

Pursuant to this decision, the application will be referred to the Office of Patent Application Processing for:

- **correction of the filing date to May 15, 2008, 2008**;
- **for indication in Office records, as appropriate, that "0" sheets of drawings were present on filing** and
- **for issuance of a filing receipt**.

Telephone inquiries regarding this communication should be directed to Petitions Attorney Steven Brantley at (571) 272-3203.

Anthony Knight
Supervisory Petitions Examiner
Office of Petitions

UNITED STATES PATENT AND TRADEMARK OFFICE

Commissioner for Patents
United States Patent and Trademark Office
P.O. Box 1450
Alexandria, VA 22313-1450
www.uspto.gov

CHOATE, HILL & STEWART LLP
TWO INTERNATIONAL PLACE
BOSTON, MA 02110

COPY MAILED

NOV 23 2009

OFFICE OF PETITIONS

In re Application of	:	
Tushar A. PARLIKAR, et al	:	
Application No. 12/121,042	:	DECISION ON PETITION
Filed: May 15, 2008	:	TO WITHDRAW
Attorney Docket No. MIN-095-101	:	FROM RECORD
	:	

This is a decision on the Request to Withdraw as attorney or agent of record under 37 C.F.R. § 1.36(b), filed September 29, 2009.

The request is **NOT APPROVED** because it is moot.

A review of the file record indicates that the power of attorney to Brenda H. Jarrell and the attorneys associated with Customer Number 24280, have been revoked by the assignee of the patent application on October 15, 2009. Accordingly, the request to withdraw under 37 C.F.R. § 1.36(b) is moot.

Telephone inquires concerning this decision should be directed to the undersigned at 571-272-6735.

/Diane C. Goodwyn/
Petitions Examiner
Office of Petitions

UNITED STATES PATENT AND TRADEMARK OFFICE

UNITED STATES DEPARTMENT OF COMMERCE
United States Patent and Trademark Office
Address: COMMISSIONER FOR PATENTS
P.O. Box 1450
Alexandria, Virginia 22313-1450
www.uspto.gov

APPLICATION NO.	FILING DATE	FIRST NAMED INVENTOR	ATTORNEY DOCKET NO.	CONFIRMATION NO.
12/121,055	05/15/2008	WOLFGANG REICHERT	DE920080077US1	6138

75339 7590 07/18/2008
PATENTS ON DEMAND, P.A.
4581 WESTON ROAD
SUITE 345
WESTON, FL 33331

EXAMINER
BEAUSOLIEL JR, ROBERT W

ART UNIT	PAPER NUMBER
2113	

MAIL DATE	DELIVERY MODE
07/18/2008	PAPER

Please find below and/or attached an Office communication concerning this application or proceeding.

The time period for reply, if any, is set in the attached communication.

UNITED STATES PATENT AND TRADEMARK OFFICE

Commissioner for Patents
United States Patent and Trademark Office
P.O. Box 1450
Alexandria, VA 22313-1450
www.uspto.gov

PATENTS ON DEMAND, P.A.
4581 WESTON ROAD
SUITE 345
WESTON FL 33331

In re Application of: Reichert, et al. Serial No.: 12/121,055 Filed: May 15, 2008 Docket: DE920080077US1 Title: RESOLVING CONFLICTS BETWEEN MULTIPLE AUTOMATION MANAGERS IN THE MANAGEMENT OF SOFTWARE RESOURCES USING INTENTION FLAGS	DECISION ON PETITION TO MAKE SPECIAL FOR NEW APPLICATION UNDER 37 C.F.R. § 1.102 & M.P.E.P. § 708.02

This is a decision on the petition filed on May 15, 2008 to make the above-identified application special for accelerated examination procedure under 37 C.F.R. § 1.102(d).

The petition to make the application special is **DISMISSED**.

REGULATION AND PRACTICE

A grantable petition to make special under 37 C.F.R. § 1.102(d) and pursuant to the "Change to Practice for Petitions in Patent Applications to Make Special and for Accelerated Examination" published in the Federal Register on June 26, 2006 (71 Fed. Reg. 36323), must satisfy the following conditions:

I. Conditions Regarding the Application:

1. the application must be a non-reissue utility or design application filed under 37 CFR 1.111(a);

2. the application, the petition and the required fees must be filed electronically using the USPTO's electronic filing system (EFS), or EFS-web; if not filed electronically, a statement asserting that EFS and EFS-web were not available during the normal business hours.

3. at the time of filing, the application must be complete under 37 CFR 1.51 and in condition for examination;

4. the application must contain three or fewer independent claims and twenty or fewer total claims and the claims must be directed to a single invention.

II. Conditions Regarding the Petition:

The petition must:

1. be filed with the application;

2. include a statement that applicant agrees that the dependent claims will be grouped together with and not to separately argue the patentability of any independent claim from which they depend during any appeal in the application;

3. include a statement that applicant agrees to make an election without traverse in a telephone interview.

4. include a statement that applicant agrees to conduct such an interview when requested by the examiner.

5. include a statement, made based on a good faith belief, that a preexamination search in compliance with the following requirements, was conducted, including an identification of the field of search by United States class and subclass, where applicable, and for database searches, the search logic or chemical structure or sequence used as a query, the name of the file(s) searched and the database service, and the date of the search.

The preexamination search must:

5.1 involve U.S. patents and patent application publications, foreign patent documents, and non-patent literature, unless the applicant can justify with reasonable certainty that no references more pertinent than those already identified are likely to be found in the eliminated sources and includes such a justification with this statement;

5.2. be directed to the claimed invention and encompass all of the features of the claims, giving the claims the broadest reasonable expectation;

5.3. encompass the disclosed features that may be claimed.

6. must provide in support of the petition an accelerated examination support document. An accelerated examination support document must include:

6.1. an information disclosure statement (IDS) in compliance with 37 CFR 1.98 citing each reference deemed most closely related to the subject matter of each of the claims;

6.2. an identification of all the limitations in the claims that are disclosed by the reference specifying where the limitation is disclosed in the cited reference;

6.3. a detailed explanation of how each of the claims are patentable over the references cited with particularity required by 37 CFR 1.111(b) and (c);

6.4. a concise statement of the utility of the invention as defined in each of the independent claims (unless the application is a design application);

6.5. a showing of where each limitation of the claims finds support under 35 USC 112, first paragraph, in the written description of the specification. If applicable, the showing must also identify: (1) each means- (or step) plus-function claim element that invokes consideration under 35 USC 112, sixth paragraph; and (2) the structure, material, or acts in the specification that corresponds to each means- (or step) plus-function claim element that invokes consideration under 35 USC 112, sixth paragraph; if the application claims the benefit of one or more applications under title 35, United States Code, the showing must also include where each limitation of the claims finds support under 35 USC 112, first paragraph, in each such application in which such supports exists;

6.6. an identification of any cited references that may be disqualified under 35 USC 103(c).

REVIEW OF FACTS

The conditions I. 1-4 & II. 1-5, 6.1, 6.4, & 6.6 above are considered to have been met. However, the petition fails to comply with conditions II. 5.1 - 5.3, 6.2, 6.3, & 6.5 above. Therefore, the petition fails to meet the required conditions to be accorded special status under the accelerated examination procedure.

Regarding the requirement of MPEP § 708.02(a)(I.)(H)[1] and items 5.1 - 5.3 above, the pre-exam search must also involve U.S. patent application publications. The pre-exam search must be directed to the (instant) claimed invention and encompass all of the disclosed features of the (instant) claims. The search logic does not seem to include the inventive concept or features included in the claim language and identified by Petitioner in the detailed explanation of patentability of the claims over the cited references. The search should consider individual features, combination of features as well as synonyms. The search should also cover the broadest scope encompassed by the claims. Based upon the claimed subject matter of the instant application, the following supplemental suggested search is presented:

Additional Class(es)/Subclass(es) should be searched:

714/15, 714/21, 714/38, 717/127, 712/216, and 712/218; and additional text searches as below:

Text search appears to be pretty vague. Doesn't include key search terms such as: disabl$3, enabl$3, corrective action, fault, intentional$2, etc.

Also, additional text searches should include key search terms mentioned above and as below:

determin$3 same (intention$3 near5 disabl$5) same ((program$4 or software) near3 resource)

(intention near3 indicat$3 near3 (state or mode or value))

determin$3 with ((last or previous) near3 action) with perform$4 with success$6

re-enabl$5 near5 (software or program$4) near5 resources

The additional search recommendations were confirmed with and recommended by a Primary Examiner in the pertinent art area.

With regard to the requirement of MPEP § 708.02(a)(I.)(I)(5) and item 6.2 above, "(2) For each reference cited, the accelerated examination support document must include an identification of all the limitations in the claims that are disclosed by the reference specifying where the limitation

[1] MPEP 8th ed. rev 5 August 2006

is disclosed in the cited reference." In the instant case, the document fails to provide an identification of all the limitations in the claims that are disclosed by references 20080052719 (Briscoe, et al.), 20040230943 (Pourheidari, et al.), 20080021918 (Rao), 20070106798 (Masumitsu, et al.), 20070011331 (Morimoto, et al.), 20060224436 (Matsumoto, et al.), 20060026552 (Mazzitelli, et al.), 20050254424 (Naono, et al.), 20050071350 (Artale, et al.), 20040237042 (Murray, et al.), 2007039337 (IBM), and "An Architectural Blueprint for Automatic Computing" (IBM and Automatic Computing). However, the applicant is permitted to respond by splitting (re-citing on separate forms) the IDS and designating one as being (those references deemed to be) in support of the petition and one (those deemed to be) NOT in support of the petition.

With regard to the requirement of MPEP § 708.02(a)(I.)(I)(5) and item 6.3 above, "(2) For each reference cited, the accelerated examination support document must include a detailed explanation of how each of the claims are patentable over the references cited with particularity required by 37 CFR 1.111(b) and (c)." In the instant case, the document fails to provide a detailed explanation of how each of the claims are patentable over the references 20080052719 (Briscoe, et al.), 20040230943 (Pourheidari, et al.), 20080021918 (Rao), 20070106798 (Masumitsu, et al.), 20070011331 (Morimoto, et al.), 20060224436 (Matsumoto, et al.), 20060026552 (Mazzitelli, et al.), 20050254424 (Naono, et al.), 20050071350 (Artale, et al.), 20040237042 (Murray, et al.), 2007039337 (IBM), and "An Architectural Blueprint for Automatic Computing" (IBM and Automatic Computing). However, the applicant is permitted to respond by splitting (re-citing on separate forms) the IDS and designating one as being (those references deemed to be) in support of the petition and one (those deemed to be) NOT in support of the petition. In such response, no discussion of the claims with respect to the cited references on the IDS not in support of the petition will be necessary.

With regard to the requirement of MPEP § 708.02(a)(I.)(I)(5) and item 6.5 above, Petitioner fails to identify where each limitation <u>of the</u> <u>instant</u> <u>claims</u> finds support under 35 USC 112, first paragraph, in the written description of the specification. Support for each limitation of each pending claim must be properly identified (by page, line or paragraph and/or figure). Reference to a single paragraph for all limitations of multiple claims does not satisfy the condition of item 6.5 above. Specifically, reference is made to Petitioner's ***general*** allegation that support in the disclosure under 35 USC 112, first paragraph, is found in following sections of specification paragraph [0005], [0006], pseudo code 116, and figures 1-2. MPEP 2162 is reproduced below:

> **2162 Policy Underlying 35 U.S.C. 112, First Paragraph**
> To obtain a valid patent, a patent application must be filed that contains a full and clear disclosure of the invention in the manner prescribed by 35 U.S.C. 112, first paragraph. The requirement for an adequate disclosure ensures that the public receives something in return for the exclusionary rights that are granted to the inventor by a patent. The grant of a patent helps to foster and enhance the development and disclosure of new ideas and the advancement of scientific knowledge. Upon the grant of a patent in the U.S., information contained in the patent becomes a part of the information available to the public for further research and development, subject only to the patentee's right to exclude others during the life of the patent.
> In exchange for the patent rights granted, 35 U.S.C. 112, first paragraph, sets forth the minimum requirements for the quality and quantity of information that must be contained
>
> in the patent to justify the grant. As discussed in more detail below, the patentee must

> disclose in the patent sufficient information to put the public in possession of the invention and to enable those skilled in the art to make and use the invention. The applicant must not conceal from the public the best way of practicing the invention that was known to the patentee at the time of filing the patent application. Failure to fully comply with the disclosure requirements could result in the denial of a patent, or in a holding of invalidity of an issued patent.

The requirement of MPEP § 708.02(a)(I.)(I)(5) and item II. 6.5 above clearly states that the petitioner is required to **specifically identify corresponding elements in the figures** and **specifically identify where the corresponding written description in the cited portions of the instant specification** can find support under 35 U.S.C. § 112, first paragraph **for each limitation of claim 1**. A review of the paragraphs 0005 and 0006 of the instant specification indicates that the description on these paragraphs of the summary of invention is identical to the claimed language of claim 1, except of the legal phraseology used in patent claim (e.g. "said" and "wherein"). It is pointed out that the written description requirement has several policy objectives. The essential goal of the description of the invention requirement is to clearly convey the information that an applicant has invented the subject matter which is claimed. Another objective is to put the examiner in possession of what the applicant claims as the invention – the written description requirement implements the principle that a patent application must describe the technology that is sought to be patented; the requirement serves both to satisfy the inventor's obligation to disclose the technologic knowledge upon which the application is based and to demonstrate that the applicants were in possession of the invention that is claimed. Further, the written description requirement promotes the progress of expedite examination by ensuring that applicants adequately describe their inventions in sufficient detail in their applications in exchange for the right to take-up out of order of examination. Thus, a general statement that all limitations of claim(s) can be found by pointing to the specification having a verbatim of the claim language cannot be accepted to satisfy such a requirement of MPEP § 708.02(a)(I.)(I)(5) and item II. 6.5 above.

Clarification and identification of support for each limitation in the claim is required.
Thus, the petition does not meet the conditions II. 5.1 - 5.3, 6.2, 6.3, & 6.5 above.

DECISION

For the above-stated reasons, the petition is **DISMISSED**. The application will therefore be taken up by the examiner for action in its regular turn.

Petitioner is given ***a single opportunity*** to perfect the petition. Any request for reconsideration of this decision must be submitted within 1 (one) month or 30 (thirty) days, whichever is longer, (no extension of time under 37 CFR 1.136(a) is permitted) from the date of this decision in order to be considered timely. Any request for reconsideration ***must fully address all of the deficiencies indicated above***. [emphasis added]

Petitioner is reminded that, upon granting of the special status of the application on request for reconsideration, the application will be processed expeditiously. However, due to the dismissal of the instant petition, examination may not be completed within twelve months of the filing date of the application.

Any inquiry regarding this decision should be directed to Brian Johnson, Quality Assurance Specialist, at (571) 272-3595. If attempts to reach the undersigned by telephone are unsuccessful, Kakali Chaki, Quality Assurance Specialist, can be reached at (571) 272-3719.

For

Brian L. Johnson
Quality Assurance Specialist, WG 2110
Technology Center 2100

REHANA PERVEEN
SUPERVISORY PATENT EXAMINER

UNITED STATES PATENT AND TRADEMARK OFFICE

UNITED STATES DEPARTMENT OF COMMERCE
United States Patent and Trademark Office
Address: COMMISSIONER FOR PATENTS
P.O. Box 1450
Alexandria, Virginia 22313-1450
www.uspto.gov

APPLICATION NO.	FILING DATE	FIRST NAMED INVENTOR	ATTORNEY DOCKET NO.	CONFIRMATION NO.
12/121,055	05/15/2008	WOLFGANG REICHERT	DE920080077US1	6138

75339 7590 08/29/2008
PATENTS ON DEMAND, P.A.
4581 WESTON ROAD
SUITE 345
WESTON, FL 33331

EXAMINER
BEAUSOLIEL JR, ROBERT W

ART UNIT	PAPER NUMBER
2113	

MAIL DATE	DELIVERY MODE
08/29/2008	PAPER

Please find below and/or attached an Office communication concerning this application or proceeding.

The time period for reply, if any, is set in the attached communication.

UNITED STATES PATENT AND TRADEMARK OFFICE

Commissioner for Patents
United States Patent and Trademark Office
P.O. Box 1450
Alexandria, VA 22313-1450
www.uspto.gov

08/26/2008

PATENTS ON DEMAND, P.A.
4581 WESTON ROAD
SUITE 345
WESTON FL 33331

In re Application of: Reichert, et al.
Serial No.: 12/121,055
Filed: May 15, 2008
Docket: DE920080077US1

Title: RESOLVING CONFLICTS BETWEEN MULTIPLE AUTOMATION MANAGERS IN THE MANAGEMENT OF SOFTWARE RESOURCES USING INTENTION FLAGS

DECISION ON PETITION TO MAKE SPECIAL FOR NEW APPLICATION UNDER 37 C.F.R. § 1.102 & M.P.E.P. § 708.02

This is a decision on the renewed petition filed on August 18, 2008 to make the above-identified application special for accelerated examination procedure under 37 C.F.R. § 1.102(d). The original petition, submitted on May 15, 2008 was dismissed in the decision mailed on July 18, 2008.

It is noted that two separate IDS documents have been submitted by the applicant on August 18, 2008 whereas the references included in one of the two IDS documents have been addressed in the Accelerated Examination Support Document. Since the references included in the other IDS document have not been addressed, the office is taking the position that those references are not relevant to the patent examination process, and therefore, are not being considered. A telephonic interview with attorney Mr. Brian K. Buchheit has resulted in the confirmation of the same position.

The petition to make the application special is **GRANTED**.

The application is eligible for accelerated examination and the petition complies with the conditions for granting the application special status pursuant to the "Change to Practice for Petitions in Patent Applications to Make Special and for Accelerated Examination" published June 26, 2006, in the Federal Register. (71 Fed. Reg. 36323).

The prosecution of the instant application will be conducted expeditiously according to the following guidelines.

1. The application will be docketed to an examiner and taken up for action within two weeks of the date of this decision.

2. Restriction Practice:
   If the examiner determines that the claims are not directed to a single invention, a telephone request to elect one single invention will be made pursuant to MPEP 812.01. As a prerequisite to the grant of this petition, the applicant has agreed to make an oral election, by telephone, without traverse. If the applicant refuses to make an election without traverse, or the examiner cannot reach the applicant after a reasonable effort, the examiner will treat the first claimed invention (invention defined by claim 1) as having being constructively elected without traverse for examination.

3. Office action:
   If it is determined that, after appropriate consultation, there is a potential rejection or any other issue to be addressed, the examiner will telephone the applicant and arrange an interview to discuss and resolve the issue. An Office action, other than a Notice of Allowance and Fee(s) Due (Notice of Allowance), will not be issued unless either: 1) an interview was conducted but did not result in agreed to action that places the application in condition for allowance, or, 2) a determination is made that an interview would be unlikely to result in the application being placed in condition for allowance, and 3) an internal conference has been held to review any rejection of any claim.

4. Time for Reply:
   An Office action other than a Notice of Allowance or a final Office action will set a shortened statutory period of one month or thirty days, whichever is longer, for reply with no extension of time available under 37 CFR 1.136(a). Failure to timely file a reply within this non-extendible period for reply will result in the abandonment of the application.

5. Reply by Applicant:
   A timely reply to an Office action other than the Notice of Allowance must be submitted electronically via EFS or EFS-web and limited to addressing the rejections, objections and requirement made. Any amendment that attempts to: 1) add claims which would result in more than three pending independent claims or more than twenty pending total claims; 2) present claims not encompassed by the pre-examination search or an updated accelerated examination support document; or 3) present claims that are directed a non-elected invention or an invention other than that previously claimed and examined in the application, will be treated as not fully responsive and will not be entered.

   For any amendment to the claims (including any new claim) that is not encompassed by the accelerated examination support document, applicant must provide an updated accelerated examination support document that encompasses the amended or new claims at the time of filing of the amendment.

   To proceed expeditiously with the examination, it is recommended that a reply with amendments made to any claim or with any new claim being added be accompanied by an updated accelerated examination support document or a statement explaining how the amended or new claim is supported by the original accelerated examination support document.

6. Information Disclosure Statement (IDS):
   Any IDS filed during prosecution must be submitted electronically via EFS or EFS-web, accompanied by an updated accelerated examination support document, and be in compliance with 37 CFR 1.97 and 1.98.

7. Post-Allowance Processing:
   To expedite processing of the allowed application into a patent, the applicant must: 1) pay the required fees within one month of the date of the Notice of Allowance, and 2) not file any post allowance papers not required by the Office. In no event may the issue fee be paid and accepted later than three months from the date of the Notice of Allowance.

8. After-Final and Appeal Procedures:
   To expedite prosecution, after receiving the final Office action, applicant must: 1) promptly file a notice of appeal, an appeal brief and appeal fees; and 2) not request a pre-appeal brief conference.

   Any amendment, affidavit or other evidence filed after final Office action must comply with applicable rules and the requirements outlined in numbered paragraphs 5 and 6 above.

   On appeal, the application will proceed according to normal appeal procedures. After appeal, the application will again be treated special.

9. Proceedings Outside the Normal Examination Process:
   If the application becomes involved in a proceeding that is outside the normal examination process (e.g., a secrecy order, national security review, interference proceeding, petitions under 37 CFR 1.181, 182 or 183), the application will be treated special before and after such proceeding.

10. Final Disposition:
    The twelve-month goal of this accelerated examination procedure ends with a final disposition. The mailing of a final Office action, a Notice of Allowance, the filing of a Notice of Appeal, or the filing of a Request for Continued Examination (RCE) is the final disposition.

If, during prosecution, a paper is not filed electronically using EFS-web, a reply is filed but is not fully responsive, the application is involved in an appeal, or a proceeding outside normal examination process, the application will still be examined expeditiously, however, the final disposition may occur more than twelve months from the filing of the application. In addition, Applicant is reminded that due to the dismissal of the previous petition submission, examination may not be completed within twelve months of the filing date of the application.

Any inquiry regarding this decision should be directed to Brian Johnson, Quality Assurance Specialist, at (571) 272-3595. If attempts to reach the undersigned by telephone are unsuccessful, Kakali Chaki, Quality Assurance Specialist, can be reached at (571) 272-3719.

___/Rehana Perveen/ For_____

Brian Johnson, WQAS 2110
Technology Center 2100
Computer Architecture, Software and Information Security

UNITED STATES PATENT AND TRADEMARK OFFICE

UNITED STATES DEPARTMENT OF COMMERCE
United States Patent and Trademark Office
Address: COMMISSIONER FOR PATENTS
P.O. Box 1450
Alexandria, Virginia 22313-1450
www.uspto.gov

ALLEN, DYER, DOPPELT, MILBRATH & GILCHRIST P.A.
1401 CITRUS CENTER 255 SOUTH ORANGE AVENUE
P.O. BOX 3791
ORLANDO, FL 32802-3791

Mail Date: 04/20/2010

Applicant	: Mario Chiricosta	: DECISION ON REQUEST FOR
Patent Number	: 7579974	: RECALCULATION of PATENT
Issue Date	: 08/25/2009	: TERM ADJUSTMENT IN VIEW
Appliction No	: 12/121,073	: OF WYETH AND NOTICE OF INTENT TO
Filed	: 05/15/2008	: ISSUE CERTIFICATE OF CORRECTION
		:

The Request for Recalculation is **GRANTED** to the extent indicated.

The patent term adjustment has been determined to be **0** days. The USPTO will *sua sponte* issue a certificate of correction reflecting the amount of PTA days determined by the recalculation.

Prior to the issuance of the certificate of correction, the USPTO will afford patentee an opportunity to be heard and request reconsideration. Accordingly, patentee has **one month or thirty (30) days**, whichever is longer, to file a request for reconsideration of this patent term adjustment calculation. See 35 U.S.C. 154(b)(3)(B)(ii) and 37 CFR 1.322(a)(4). No extensions of time will be granted under 37 CFR 1.136.

Patentee should use document code PET.OP if electronically filing a request for reconsideration of this patent term adjustment calculation. The patentee must also include the information required by 37 CFR 1.705(b)(2) and the fee required by 37 CFR 1.18(e). If patentee does not file a timely request for reconsideration of this patent term adjustment calculation including the information required by 37 CFR 1.705(b)(2) and the fee required by 37 CFR 1.18(e), the USPTO will issue a certificate of correction reflecting the PTA determination noted above.

Patentee should be aware that in order to preserve the right to review in the United States District Court for the District of Columbia of the USPTO patent term adjustment determination, patentee must ensure that he or she also take the steps required under 35 U.S.C. 154(b)(4)(A) in a timely manner. Nothing in the request for recalculation should be construed as providing an alternative time frame for commencing a civil action under 35 U.S.C. 154(b)(4)(A).

Any questions concerning this decision should be directed to the Office of Patent Legal Administration at 571-272-7702.

UNITED STATES PATENT AND TRADEMARK OFFICE

UNITED STATES DEPARTMENT OF COMMERCE
United States Patent and Trademark Office
Address: COMMISSIONER FOR PATENTS
P.O. Box 1450
Alexandria, Virginia 22313-1450
www.uspto.gov

APPLICATION NO.	FILING DATE	FIRST NAMED INVENTOR	ATTORNEY DOCKET NO.	CONFIRMATION NO.
12/121,095	05/15/2008	Nobuyuki Kasahara	326365US0	6215

22850 7590 01/08/2010
OBLON, SPIVAK, MCCLELLAND MAIER & NEUSTADT, L.L.P.
1940 DUKE STREET
ALEXANDRIA, VA 22314

EXAMINER
BUIE-HATCHER, NICOLE M

ART UNIT	PAPER NUMBER
1796	

NOTIFICATION DATE	DELIVERY MODE
01/08/2010	ELECTRONIC

Please find below and/or attached an Office communication concerning this application or proceeding.

The time period for reply, if any, is set in the attached communication.

Notice of the Office communication was sent electronically on above-indicated "Notification Date" to the following e-mail address(es):

patentdocket@oblon.com
oblonpat@oblon.com
jgardner@oblon.com

UNITED STATES PATENT and TRADEMARK OFFICE

COMMISSIONER FOR PATENTS
UNITED STATES PATENT AND TRADEMARK OFFICE
P.O. BOX 1450
ALEXANDRIA, VA 23313-1450
WWW.USPTO.GOV

Mailed:

In re Application of Nobuyuki Kasahara et al.
Serial No.: 12/121,095
Filed: May 15, 2008

DECISION ON PETITION UNDER *37 CFR 1.48(a)*

Title: PROCESS FOR PRODUCING PERFLUOROPOLYMER, PRODUCTION APPARATUS AND PROCESS FOR PRODUCING ELECTROLYTE MEMBRANE FOR POLYMER ELECTROLYTE FUEL CELLS

This is a decision on the PETITION TO CORRECT INVENTORSHIP IN A NON-PROVISIONAL PATENT APPLICATION filed August 28, 2008 to correct inventorship under 37 CFR 1.48(a) by adding the name of Satoshi Shiratori to the list of inventors of the instant application.

It is noted that the applicant has met the requirements of 37 C.F.R. § 1.48(a) by (1) submitting a request to correct the inventorship that sets forth the desired inventorship change; (2) providing a statement from each person being added as an inventor that the error in inventorship occurred without deceptive intention on his or her part; (3) providing a declaration of the actual inventors as required by 37 C.F.R. § 1.63; (4) providing the processing fee set forth in 1.17(i); and, (5) providing the written consent of the assignee.

The request is **GRANTED**.

The application file is being forwarded to the appropriate section of the Patent and Trademark Office for correction of the record.

Mark Eashoo, Ph. D.
Supervisory Patent Examiner
Art Unit 1796, Technology Center 1700

NIXON PEABODY LLP
Clinton Square, P.O. Box 31051
Rochester, New York 14603-1051

UNITED STATES PATENT AND TRADEMARK OFFICE

Commissioner for Patents
United States Patent and Trademark Office
P.O. Box 1450
Alexandria, VA 22313-1450
www.uspto.gov

ROBERT W. BECKER & ASSOCIATES
707 HIGHWAY 333
SUITE B
TIJERAS NM 87059-7507

MAILED

JUL 13 2010

OFFICE OF PETITIONS

ON PETITION

In re Patent No. 7,695,019 :
Issue Date : April 13, 2010 :
Application No. 12/121,104 :
Filed: May 15, 2008 :
Attorney Docket No. AFG 18502-US :

This is a decision on the petition, filed May 13, 2010, which is being treated as a request under 37 CFR 3.81(b)[1] to correct the assignee's name on the Fee(s) Transmittal form PTOL-85(b) so that the Letters Patent will issue to the assignee.

The request is **DISMISSED**.

37 CFR 3.81(b), effective June 25, 2004, reads:

> *After payment of the issue fee:* Any request for issuance of an application in the name of the assignee submitted after the date of payment of the issue fee, and any request for a patent to be corrected to state the name of the assignee, must state that the assignment was submitted for recordation as set forth in § 3.11 before issuance of the patent, and must include a request for a certificate of correction under § 1.323 of this chapter (accompanied by the fee set forth in § 1.20(a)) and the processing fee set forth in § 1.17(i) of this chapter.

The request under 37 CFR 3.81(b) was not accompanied by a statement that the assignment was submitted for recordation before issuance of the patent. As petitioner has failed to comply with the provisions of 37 CFR 3.81(b), the request cannot be granted at this time.

[1] *See* MPEP 1309, subsection II and Official Gazette of June 22, 2004

Inquiries concerning this decision should be directed to Diane Goodwyn at (571) 272-6735.

Any questions concerning issuance of a certificate of correction should be directed to the Certificates of Correction Branch at (571) 272-4200.

Thurman K. Page
Petitions Examiner
Office of Petitions

PTO/SB/130 (03-08)
Approved for use through 05/31/2008. OMB 0651- 0031
U.S. Patent and Trademark Office; U.S. DEPARTMENT OF COMMERCE
Under the Paperwork Reduction Act of 1995, no persons are required to respond to a collection of information unless it contains a valid OMB control number

PETITION TO MAKE SPECIAL BASED ON AGE FOR ADVANCEMENT OF EXAMINATION UNDER 37 CFR 1.102(c)(1)

Application Information

Application Number	12121124	Confirmation Number	6269	Filing Date	2008-05-15
Attorney Docket Number (optional)	INK-001.03	Art Unit		Examiner	
First Named Inventor	KODIS, Robert D.				
Title of Invention	CUTTING SYSTEM				

Attention: Office of Petitions

An application may be made special for advancement of examination upon filing of a petition showing that the applicant is 65 years of age, or more. No fee is required with such a petition. See 37 CFR 1.102(c)(1) and MPEP 708.02 (IV).

APPLICANT HEREBY PETITIONS TO MAKE SPECIAL FOR ADVANCEMENT OF EXAMINATION IN THIS APPLICATION UNDER 37 CFR 1.102(c)(1) and MPEP 708.02 (IV) ON THE BASIS OF THE APPLICANT'S AGE.

A grantable petition requires one of the following items:
(1) Statement by one named inventor in the application that he/she is 65 years of age, or more; or
(2) Certification by a registered attorney/agent having evidence such as a birth certificate, passport, driver's license, etc. showing one named inventor in the application is 65 years of age, or more.

Name of Inventor who is 65 years of age, or older

Given Name	Middle Name	Family Name	Suffix
Robet	D.	Kodis	

A signature of the applicant or representative is required in accordance with 37 CFR 1.33 and 10.18.
Please see 37 CFR 1.4(d) for the format of the signature.

Select (1) or (2) :

○ (1) I am an inventor in this application and I am 65 years of age, or more.

◉ (2) I am an attorney or agent registered to practice before the Patent and Trademark Office, and I certify that I am in possession of evidence, and will retain such in the application file record, showing that the inventor listed above is 65 years of age, or more.

Signature	/SCOTT E. KAMHOLZ/	Date (YYYY-MM-DD)	2008-05-15
Name	Scott E. Kamholz	Registration Number	48543

PTO/SB/130 (03-08)
Approved for use through 05/31/2008. OMB 0651- 0031
U.S. Patent and Trademark Office; U.S. DEPARTMENT OF COMMERCE
Under the Paperwork Reduction Act of 1995, no persons are required to respond to a collection of information unless it contains a valid OMB control number

Privacy Act Statement

The Privacy Act of 1974 (P.L. 93-579) requires that you be given certain information in connection with your submission of the attached form related to a patent application or patent. Accordingly, pursuant to the requirements of the Act, please be advised that: (1) the general authority for the collection of this information is 35 U.S.C. 2(b)(2); (2) furnishing of the information solicited is voluntary; and (3) the principal purpose for which the information is used by the U.S. Patent and Trademark Office is to process and/or examine your submission related to a patent application or patent. If you do not furnish the requested information, the U.S. Patent and Trademark Office may not be able to process and/or examine your submission, which may result in termination of proceedings or abandonment of the application or expiration of the patent.

The information provided by you in this form will be subject to the following routine uses:

1. The information on this form will be treated confidentially to the extent allowed under the Freedom of Information Act (5 U.S.C. 552) and the Privacy Act (5 U.S.C. 552a). Records from this system of records may be disclosed to the Department of Justice to determine whether the Fr eedom of Information Act requires disclosure of these records.

2. A record from this system of records may be disclosed, as a routine use, in the course of presenting evidence to a court, magistrate, or administrative tribunal, including disclosures to opposing counsel in the course of settlement negotiations.

3. A record in this system of records may be disclosed, as a routine use, to a Member of Congress submitting a request involving an individual, to whom the record pertains, when the individual has requested assistance from the Member with respect to the subject matter of the record.

4. A record in this system of records may be disclosed, as a routine use, to a contractor of the Agency having need for the information in order to perform a contract. Recipients of information shall be required to comply with the requirements of the Privacy Act of 1974, as amended, pursuant to 5 U.S.C. 552a(m).

5. A record related to an International Application filed under the Patent Cooperation Treaty in this system of records may be disclosed, as a routine use, to the International Bureau of the World Intellectual Property Organization, pursuant to the Patent Cooperation Treaty.

6. A record in this system of records may be disclosed, as a routine use, to another federal agency for purposes of National Security review (35 U.S.C. 181) and for review pursuant to the Atomic Energy Act (42 U.S.C. 218(c)).

7. A record from this system of records may be disclosed, as a routine use, to the Administrator, General Services, or his/her designee, during an inspection of records conducted by GSA as part of that agency's responsibility to recommend improvements in records management practices and programs, under authority of 44 U.S.C. 2904 and 2906. Such disclosure shall be made in accordance with the GSA regulations governing inspection of records for this purpose, and any other relevant (i.e., GSA or Commerce) directive. Such disclosure shall not be used to make determinations about indivi duals.

8. A record from this system of records may be disclosed, as a routine use, to the public after either publication of the application pursuant to 35 U.S.C. 122(b) or issuance of a patent pursuant to 35 U.S.C. 151. Further, a record may be disclosed, subject to the limitations of 37 CFR 1.14, as a routine use, to the public if the record was filed in an application which became abandoned or in which the proceedings were terminated and which application is referenced by either a published application, an application open to public inspections or an issued patent.

9. A record from this system of records may be disclosed, as a routine use, to a Federal, State, or local law enforcement agency, if the USPTO becomes aware of a violation or potential violation of law or regulation.

UNITED STATES PATENT AND TRADEMARK OFFICE

Commissioner for Patents
United States Patent and Trademark Office
P.O. Box 1450
Alexandria, VA 22313-1450
www.uspto.gov

In re Application of :
Robert D. Kodis :

Application No. 12121124 :DECISION ON PETITION TO MAKE SPECIAL
Filed: :UNDER 37 CFR 1.102(c)(1)
:

Attorney Docket No. INK-001.03

This is a decision on the electronic petition under 37 CFR 1.102 (c)(1) ,filed 15-MAY-2008 to make the above-identified application special based on applicant's age as set forth in MPEP § 708.02, Section IV.

The petition is **GRANTED**.

A grantable petition to make an application special under 37 CFR 1.102(c)(1), MPEP § 708.02, Section IV: Applicant's Age must include a statement by applicant or a registered practitioner having evidence that applicant is at least 65 years of age. No fee is required.

Accordingly, the above-identified application has been accorded “special” status and will be taken up for action by the examiner upon the completion of all pre-examination processing.

Telephone inquires concerning this electronic decision should be directed to the Electronic Business Center at 866-217-9197.

All other inquires concerning either the examination or status of the application should be directed to the Technology Center.

UNITED STATES PATENT AND TRADEMARK OFFICE

Commissioner for Patents
United States Patent and Trademark Office
P.O. Box 1450
Alexandria, VA 22313-1450
www.uspto.gov

FISH & RICHARDSON P.C.
PO BOX 1022
MINNEAPOLIS MN 55440-1022

MAILED

MAY 25 2010

OFFICE OF PETITIONS

In re Application of Coladonato, et al. Application No. 12/121,129 Filed: May 15, 2008 Attorney Docket No. 16113-0629001	: : : : :	DECISION ON PETITION UNDER 37 CFR 1.137(b)

This is a decision on the petition, filed February 25, 2010, which is being treated as a petition under 37 CFR 1.137(b) to revive the instant nonprovisional application for failure to timely notify the U.S. Patent and Trademark (USPTO) of the filing of an application in a foreign country, or under a multinational treaty that requires publication of applications eighteen months after filing. *See* 37 CFR 1.137(f).

The petition is **GRANTED**.

Petitioners state that the instant nonprovisional application is the subject of an application filed in an eighteen-month publication country on August 29, 2008. However, the USPTO was unintentionally not notified of this filing within 45 days subsequent to the filing of the subject application in an eighteen-month publication country.

In view of the above, this application became abandoned pursuant to 35 U.S.C. § 122(b)(2)(B)(iii) and 37 CFR 1.213(c) for failure to timely notify the Office of the filing of an application in a foreign country or under a multilateral international agreement that requires publication of applications 18 months after filing.

A petition to revive an application abandoned pursuant to 35 U.S.C. 122(b)(2)(B)(iii) for failure to notify the USPTO of a foreign filing must be accompanied by:

(1) the required reply which is met by the notification of such filing in a foreign country or under a multinational treaty;
(2) the petition fee as set forth in 37 CFR 1.17(m); and
(3) a statement that the entire delay in filing the required reply from the due date of the reply until the filing of a grantable petition was unintentional.

The instant petition has been found to be in compliance with 37 CFR 1.137(b). Accordingly, the failure to timely notify the USPTO of a foreign or international filing within 45 days after the date of filing of such foreign or international application as provided by 35 U.S.C. § 122(b)(2)(B)(iii) and 37 CFR 1.213(c) is accepted as having been unintentionally delayed.

The previous Request and Certification under 35 U.S.C. § 122(b)(2)(B)(i) has been rescinded. A Communication Regarding Rescission of Nonpublication Request and/or Notice of Foreign Filing which sets forth the projected publication date of June 10, 2010 was mailed on March 5, 2010.

Telephone inquiries concerning this decision should be directed to the undersigned at (571) 272-3230.

This application is being referred to Technology Center Art Unit 3622 for examination in due course.

Shirene Willis Brantley
Senior Petitions Attorney
Office of Petitions

UNITED STATES PATENT AND TRADEMARK OFFICE

Commissioner for Patents
United States Patent and Trademark Office
P.O. Box 1450
Alexandria, VA 22313-1450
www.uspto.gov

WENDEROTH, LIND & PONACK L.L.P.
2033 K. STREET, NW
SUITE 800
WASHINGTON DC 20006

MAIL

OCT 10 2008

DIRECTOR'S OFFICE
TECHNOLOGY CENTER 2600

In re Application of	:	
ABE, SHINYA	:	DECISION ON REQUEST TO
Application No. 12/121,141	:	PARTICIPATE IN PATENT
Filed: May 15, 2008	:	PROSECUTION HIGHWAY
Attorney Docket No. 2008_0873	:	PROGRAM AND PETITION
	:	TO MAKE SPECIAL UNDER
	:	37 CFR 1.102(d)

This is a decision on the request to participate in the Patent Prosecution Highway (PPH) program and the petition under 37 CFR 1.102(d), filed August 28, 2008, to make the above-identified application special.

The request and petition are **GRANTED**.

A grantable request to participate in the PPH program and petition to make special require:

(1) The U.S. application must validly claim priority under 35 U.S.C. 119(a) to one or more applications filed in the JPO;
(2) Applicant must submit a copy of the allowable/patentable claim(s) from the JPO application(s) along with an English translation thereof and a statement that the English translation is accurate;
(3) All the claims in the U.S. application must sufficiently correspond or be amended to sufficiently correspond to the allowable/patentable claim(s) in the JPO application(s);
(4) Examination of the U.S. application has not begun;
(5) Applicant must submit a copy of all the office actions from each of the JPO application(s) containing the allowable/patentable claim(s) along with an English translation thereof and a statement that the English translation is accurate;
(6) Applicant must submit an IDS listing the documents cited by the JPO examiner in the JPO office action along with copies of documents except U.S. patents or U.S. patent application publications; and
(7) The required petition fee under 37 CFR 1.17(h).

The request to participate in the PPH program and petition comply with the above requirements. Accordingly, the above-identified application has been accorded "special" status.

Telephone inquiries concerning this decision should be directed to Kenneth Wieder at 571-272-2986.

All other inquiries concerning the examination or status of the application should be directed to Patent Application Information Retrieval (PAIR) system.

The application is being forwarded to the examiner for action on the merits commensurate with this decision.

Kenneth A. Wieder

Kenneth Wieder
Quality Assurance Specialist
Technology Center 2600
Communications

UNITED STATES PATENT AND TRADEMARK OFFICE

UNITED STATES DEPARTMENT OF COMMERCE
United States Patent and Trademark Office
Address: COMMISSIONER FOR PATENTS
P.O. Box 1450
Alexandria, Virginia 22313-1450
www.uspto.gov

ALLEN, DYER, DOPPELT, MILBRATH & GILCHRIST P.A.
1401 CITRUS CENTER 255 SOUTH ORANGE AVENUE
P.O. BOX 3791
ORLANDO, FL 32802-3791

Mail Date: 05/24/2010

Applicant	: Pietro Antonio Paolo Calo	: DECISION ON REQUEST FOR
Patent Number	: 7626456	: RECALCULATION of PATENT
Issue Date	: 12/01/2009	: TERM ADJUSTMENT IN VIEW
Application No	: 12/121,143	: OF WYETH AND NOTICE OF INTENT TO
Filed	: 05/15/2008	: ISSUE CERTIFICATE OF CORRECTION
		:

The Request for Recalculation is **GRANTED** to the extent indicated.

The patent term adjustment has been determined to be **41** days. The USPTO will *sua sponte* issue a certificate of correction reflecting the amount of PTA days determined by the recalculation.

Prior to the issuance of the certificate of correction, the USPTO will afford patentee an opportunity to be heard and request reconsideration. Accordingly, patentee has **one month or thirty (30) days**, whichever is longer, to file a request for reconsideration of this patent term adjustment calculation. See 35 U.S.C. 154(b)(3)(B)(ii) and 37 CFR 1.322(a)(4). No extensions of time will be granted under 37 CFR 1.136.

Patentee should use document code PET.OP if electronically filing a request for reconsideration of this patent term adjustment calculation. The patentee must also include the information required by 37 CFR 1.705(b)(2) and the fee required by 37 CFR 1.18(e). If patentee does not file a timely request for reconsideration of this patent term adjustment calculation including the information required by 37 CFR 1.705(b)(2) and the fee required by 37 CFR 1.18(e), the USPTO will issue a certificate of correction reflecting the PTA determination noted above.

Patentee should be aware that in order to preserve the right to review in the United States District Court for the District of Columbia of the USPTO patent term adjustment determination, patentee must ensure that he or she also take the steps required under 35 U.S.C. 154(b)(4)(A) in a timely manner. Nothing in the request for recalculation should be construed as providing an alternative time frame for commencing a civil action under 35 U.S.C. 154(b)(4)(A).

Any questions concerning this decision should be directed to the Office of Patent Legal Administration at 571-272-7702.