UNITED STATES PATENT AND TRADEMARK OFFICE

Commissioner for Patents
United States Patent and Trademark Office
P.O. Box 1450
Alexandria, VA 22313-1450
www.uspto.gov

QUALCOMM INCORPORATED
5775 MOREHOUSE DR.
SAN DIEGO, CA 92121

MAILED

OCT 22 2009

OFFICE OF PETITIONS

In re Application of	:	
Nakul Duggal, et al.	:	
Application No. 12/185,298	:	DECISION ON PETITION
Filed: August 4, 2008	:	
Attorney Docket No. 072235	:	

This is a decision on the petition under the unintentional provisions of 37 CFR 1.137(b), filed August 18, 2009, to revive the above-identified application.

The application became abandoned for failure to reply in a timely manner to the Notice of Omitted Item(s) in a Non-provisional Application (Notice), mailed August 21, 2008. The Notice set a period for reply of two (2) months from the mail date of the Notice. No extensions of time under the provisions of 37 CFR 1.136(a) were obtained. Accordingly, the application became abandoned on October 22, 2008.

The petition satisfies the requirements of 37 CFR 1.137(b) in that petitioner has supplied (1) the reply in the form of a reply, (2) the petition fee of $1620, and (3) a proper statement of unintentional delay.

In view of the above, the petition is **GRANTED**.

Telephone inquiries concerning this decision should be directed to undersigned at (571) 272-1642. All other inquiries concerning the examination or status of this application should be directed to the Office of Patent Application Processing at their hotline at 571-272-4000.

This application is being referred to the Office of Patent Application Processing for pre-examination processing of the reply received August 18, 2009.

April M. Wise
Petitions Examiner
Office of Petitions

UNITED STATES PATENT AND TRADEMARK OFFICE

Commissioner for Patents
United States Patent and Trademark Office
P.O. Box 1450
Alexandria, VA 22313-1450
www.uspto.gov

MICHAEL T. KONCZAL, PATENT ATTORNEY
P.O. BOX 863656
PLANO TX 75086

COPY MAILED

JAN 0 6 2010

In re Application of	:	
TEGGATZ ET AL.	:	
Application No. 12/185,306	:	DECISION ON PETITION
Filed: August 4, 2008	:	TO MAKE SPECIAL UNDER
Attorney Docket No. TRI802	:	37 CFR 1.102(c)(2)
	:	

This is a decision on the petition under 37 CFR 1.102(c)(2), filed December 8, 2009, to make the above-identified application special under the pilot program for applications pertaining to Green Technologies as set forth in 74 Federal Register Notice 64666 (December 8, 2009).

The petition is **DISMISSED**.

If reconsideration of this decision is desired, a petition for reconsideration must be filed within ONE (1) MONTH OR THIRTY (30) DAYS from the mail date of this decision, whichever is longer. No extension of this time limit can be granted under 37 CFR 1.136(a) or (b). The petition for reconsideration should include an exhaustive attempt to provide the lacking item(s) noted below, since, after a decision on the petition for reconsideration, no further reconsideration or review of the matter will be undertaken by the Director.

A grantable petition to make an application special under 37 CFR 1.102(c)(2) and the pilot program as set forth in 74 FR 64666 must be directed to a nonprovisional application filed under 35 USC 111(a) or be a national stage entry under 35 USC 371, exclusive of any reissue applications and be filed prior to the date of the notice, December 8, 2009.

In order to qualify for special status, the following requirements must be met. 1) The application must be classified in one of the eligible US classifications listed in section VI of the notice. 2) The application must have no more than 3 independent claims and no more than 20 total claims. 3) The application must not contain any multiple dependent claims. 4) The application must be directed to a single invention that either: A) materially enhances the quality of the environment or B) that materially contributes to: i) the discovery or development of renewable energy resources, ii) the more efficient utilization and conservation of energy resources, or iii) greenhouse gas emission reduction. If the disclosure is not clear on its face that the claimed invention materially contributes under category (A) or (B), the petition must be accompanied by a statement by the applicant, assignee, or an attorney/agent registered to practice before the

Office explaining how the materiality standard is met. 5) A statement that applicant will agree to make an election without traverse in a telephonic interview if a restriction requirement is made by the examiner. 6) The petition to make special must be filed electronically. 7) The petition must be filed at least one day prior to the date that a first Office Action appears in the Patent Application Information Retrieval (PAIR) system. 8) The petition must be accompanied by a request for early publication in compliance with 37 CFR 1.219 and include the publication fee as set forth in 37 CFR 1.18(d).

The requirement for a fee for consideration of the petition to make special for applications pertaining to Green Technologies has been waived.

The petition lacks item no. 4 above for the reason as explained in more detail below.

The instant petition fails to state the basis for the special status (i.e., whether the invention either: A) materially enhances the quality of the environment or B) materially contributes to: i) the discovery or development of renewable energy resources, ii) the more efficient utilization and conservation of energy resources, or iii) greenhouse gas emission reduction). The petition must be accompanied by a statement by applicant, assignee, or an attorney/agent registered to practice before the Office explaining how the materiality standard is met. As stated in section III of the Notice, applicant must provide such a statement pertaining to the materiality standard if the application disclosure is not clear on its face as to the materiality of the basis for the special status of the invention. This petition lacks such a statement and it is not agreed that the application on its face meets that materiality standard.

The petition lacks item no. 8 above for the reason as explained in more detail below.

The instant petition has not been accompanied by the publication fee under 37 CFR 1.18(d). More particularly, as set forth at numeral 7 in the Requirements section of the Notice, the petition to make special must be accompanied by a request for early publication and the publication fee set forth in 37 CFR 1.18(d). Since the publication fee was not included and no authorization was given for charging this fee, the petition is dismissed.

Further correspondence with respect to this matter should be addressed as follows:

By Mail: Mail Stop PETITION
Commissioner for Patents
P. O. Box 1450
Alexandria, VA 22313-1450

By hand: U. S. Patent and Trademark Office
Customer Service Window, Mail Stop Petitions
Randolph Building
401 Dulany Street
Alexandria, VA 22314

By FAX: (571) 273-8300

Telephone inquiries concerning this decision should be directed to Gay Ann Spahn at 571-272-8011.

All other inquiries concerning either the examination or status of the application should be directed to the Technology Center.

The application is being forwarded to the Technology Center Art Unit 2836 for action in its regular turn.

Ramesh Krishnamurthy

Ramesh Krishnamurthy
Petitions Examiner
Office of Petitions

UNITED STATES PATENT AND TRADEMARK OFFICE

UNITED STATES DEPARTMENT OF COMMERCE
United States Patent and Trademark Office
Address: COMMISSIONER FOR PATENTS
P.O. Box 1450
Alexandria, Virginia 22313-1450
www.uspto.gov

APPLICATION NO.	FILING DATE	FIRST NAMED INVENTOR	ATTORNEY DOCKET NO.	CONFIRMATION NO.
12/185,306	08/04/2008	Ross E. Teggatz	TRI802	9122

62432 7590 02/24/2010
MICHAEL T. KONCZAL, PATENT ATTORNEY
P.O. BOX 863656
PLANO, TX 75086

EXAMINER
KAPLAN, HAL IRA

ART UNIT	PAPER NUMBER
2836	

MAIL DATE	DELIVERY MODE
02/24/2010	PAPER

Please find below and/or attached an Office communication concerning this application or proceeding.

The time period for reply, if any, is set in the attached communication.

UNITED STATES PATENT AND TRADEMARK OFFICE

Commissioner for Patents
United States Patent and Trademark Office
P.O. Box 1450
Alexandria, VA 22313-1450
www.uspto.gov

MICHAEL T. KONCZAL, PATENT ATTORNEY
P.O. BOX 863656
PLANO TX 75086

In re Application of	:	
TEGGATZ et al.	:	DECISION ON PETITION
Application No. 12/185,306	:	TO MAKE SPECIAL UNDER
Filed: 04 August 2008	:	THE GREEN TECHNOLOGY
Attorney Docket No. TRI802	:	PILOT PROGRAM

This is a decision on the petition under 37 CFR 1.102, filed 08 December 2009 and renewed on 02 February 2010, to make the above-identified application special under the pilot program for applications pertaining to Green Technologies as set forth 74 Federal Register Notice 64666 (December 8, 2009).

The petition is **GRANTED**.

A grantable petition to make an application special under 37 CFR 1.102 and the pilot program as set forth in 74 FR 64666 must be directed to a nonprovisional application filed under 35 USC 111(a) or be a national stage entry under 35 USC 371, exclusive of any reissue applications and be filed prior to the date of the notice, December 8, 2009.

In order to qualify for special status, the following requirements must be met. 1) The application must be classified in one of the eligible US classifications listed in section VI of the notice. 2) The application must have no more than 3 independent claims and no more than 20 total claims. 3) The application must not contain any multiple dependent claims. 4) The petition must state the basis for seeking special status, i.e., the claimed invention either: A) materially enhances the quality of the environment or B) materially contributes to: i) the discovery or development of renewable energy resources, ii) the more efficient utilization and conservation of energy resources, or iii) greenhouse gas emission reduction. 5) If the disclosure is not clear on its face that the claimed invention materially contributes under category (A) or (B), the petition must be accompanied by a statement by the applicant, assignee, or an attorney/agent registered to practice before the Office explaining how the materiality standard is met. 6) A statement that applicant will agree to make an election without traverse in a telephonic interview if a restriction requirement is made by the examiner. 7) The petition to make special must be filed electronically. 8) The petition must be filed at least one day prior to the date that a first Office Action appears in the Patent Application Information Retrieval (PAIR) system. 9) The petition must be accompanied by a request for early publication in compliance with 37 CFR 1.219 and include the publication fee as set forth in 37 CFR 1.18(d).

The requirement for a fee for consideration of the petition to make special for applications pertaining to Green Technologies has been waived.

The instant petition complies with items 1 – 9 above. Accordingly, the above-identified application has been accorded "special" status.

Telephone inquires concerning this decision should be directed to Lee W. Young at 571-272-4549.

The application is being forwarded to the Technology Center Art Unit 2836 for action on the merits commensurate with this decision.

Lee W. Young
Quality Assurance Specialist
Technology Center 2800

UNITED STATES PATENT AND TRADEMARK OFFICE

Commissioner for Patents
United States Patent and Trademark Office
P.O. Box 1450
Alexandria, VA 22313-1450
www.uspto.gov

K&L Gates, LLP
P.O. Box 1135
CHICAGO, IL 60690

MAILED

MAY 19 2009

OFFICE OF PETITIONS

In re Application of	:	
James C. Hazlett, et. al.	:	
Application No. 12/185,374	:	DECISION ON PETITION
Filed: August 4, 2008	:	
Attorney Docket No. 118512-039	:	

This is a decision on the petition under 37 CFR I.I82, filed April 17, 2009, to change the order of the names of the inventors.

The instant petition is not signed by an attorney of record. However, in accordance with 37 CFR 1.34(a), the signature of David W. Okey appearing on the petition shall constitute a representation to the United States Patent and Trademark Office that he is authorized to represent the particular party on whose behalf he acts.

The petition is **GRANTED**.

Office records have been corrected to reflect the change in the order of the named inventors. A corrected Filing Receipt, which sets forth the desired order of the named inventors, accompanies this decision on petition.

As authorized, the $400 fee for the petition under 37 CFR 1.182 has been assessed to petitioner's deposit account.

This application is being referred to Technology Center Art Unit 3742 for examination in due course.

Telephone inquiries regarding this decision should be directed to the undersigned at (571) 272-3226.

Andrea Smith
Petitions Examiner
Office of Petitions

ATTACHMENT: Corrected Filing Receipt

UNITED STATES PATENT AND TRADEMARK OFFICE

UNITED STATES DEPARTMENT OF COMMERCE
United States Patent and Trademark Office
Address: COMMISSIONER FOR PATENTS
P.O. Box 1450
Alexandria, Virginia 22313-1450
www.uspto.gov

APPLICATION NUMBER	FILING or 371(c) DATE	GRP ART UNIT	FIL FEE REC'D	ATTY.DOCKET.NO	TOT CLAIMS	IND CLAIMS
12/185,374	08/04/2008	3742	1500	118512-039	21	5

CONFIRMATION NO. 9239

CORRECTED FILING RECEIPT

24573
K&L Gates LLP
P.O. Box 1135
CHICAGO, IL 60690

OC000000036041736

Date Mailed: 05/19/2009

Receipt is acknowledged of this non-provisional patent application. The application will be taken up for examination in due course. Applicant will be notified as to the results of the examination. Any correspondence concerning the application must include the following identification information: the U.S. APPLICATION NUMBER, FILING DATE, NAME OF APPLICANT, and TITLE OF INVENTION. Fees transmitted by check or draft are subject to collection. Please verify the accuracy of the data presented on this receipt. **If an error is noted on this Filing Receipt, please submit a written request for a Filing Receipt Correction. Please provide a copy of this Filing Receipt with the changes noted thereon. If you received a "Notice to File Missing Parts" for this application, please submit any corrections to this Filing Receipt with your reply to the Notice. When the USPTO processes the reply to the Notice, the USPTO will generate another Filing Receipt incorporating the requested corrections**

Applicant(s)

James C. Hazlett, Delevan, WI;
Richard W. Fitzgerald, Franklin, WI;
Manuel Anaya Perea, Chihuahua, MEXICO;

Assignment For Published Patent Application

Cherry Corporation, Pleasant Prairie, WI

Power of Attorney: None

Domestic Priority data as claimed by applicant

This appln claims benefit of 60/970,657 09/07/2007

Foreign Applications

If Required, Foreign Filing License Granted: 08/14/2008

The country code and number of your priority application, to be used for filing abroad under the Paris Convention, is **US 12/185,374**

Projected Publication Date: Not Applicable

Non-Publication Request: No

Early Publication Request: No

Title

HEATED HAND GRIPS

Preliminary Class

219

PROTECTING YOUR INVENTION OUTSIDE THE UNITED STATES

Since the rights granted by a U.S. patent extend only throughout the territory of the United States and have no effect in a foreign country, an inventor who wishes patent protection in another country must apply for a patent in a specific country or in regional patent offices. Applicants may wish to consider the filing of an international application under the Patent Cooperation Treaty (PCT). An international (PCT) application generally has the same effect as a regular national patent application in each PCT-member country. The PCT process **simplifies** the filing of patent applications on the same invention in member countries, but **does not result** in a grant of "an international patent" and does not eliminate the need of applicants to file additional documents and fees in countries where patent protection is desired.

Almost every country has its own patent law, and a person desiring a patent in a particular country must make an application for patent in that country in accordance with its particular laws. Since the laws of many countries differ in various respects from the patent law of the United States, applicants are advised to seek guidance from specific foreign countries to ensure that patent rights are not lost prematurely.

Applicants also are advised that in the case of inventions made in the United States, the Director of the USPTO must issue a license before applicants can apply for a patent in a foreign country. The filing of a U.S. patent application serves as a request for a foreign filing license. The application's filing receipt contains further information and guidance as to the status of applicant's license for foreign filing.

Applicants may wish to consult the USPTO booklet, "General Information Concerning Patents" (specifically, the section entitled "Treaties and Foreign Patents") for more information on timeframes and deadlines for filing foreign patent applications. The guide is available either by contacting the USPTO Contact Center at 800-786-9199, or it can be viewed on the USPTO website at http://www.uspto.gov/web/offices/pac/doc/general/index.html.

For information on preventing theft of your intellectual property (patents, trademarks and copyrights), you may wish to consult the U.S. Government website, http://www.stopfakes.gov. Part of a Department of Commerce initiative, this website includes self-help "toolkits" giving innovators guidance on how to protect intellectual property in specific countries such as China, Korea and Mexico. For questions regarding patent enforcement issues, applicants may call the U.S. Government hotline at 1-866-999-HALT (1-866-999-4158).

LICENSE FOR FOREIGN FILING UNDER

Title 35, United States Code, Section 184

Title 37, Code of Federal Regulations, 5.11 & 5.15

GRANTED

The applicant has been granted a license under 35 U.S.C. 184, if the phrase "IF REQUIRED, FOREIGN FILING LICENSE GRANTED" followed by a date appears on this form. Such licenses are issued in all applications where the conditions for issuance of a license have been met, regardless of whether or not a license may be required as

set forth in 37 CFR 5.15. The scope and limitations of this license are set forth in 37 CFR 5.15(a) unless an earlier license has been issued under 37 CFR 5.15(b). The license is subject to revocation upon written notification. The date indicated is the effective date of the license, unless an earlier license of similar scope has been granted under 37 CFR 5.13 or 5.14.

This license is to be retained by the licensee and may be used at any time on or after the effective date thereof unless it is revoked. This license is automatically transferred to any related applications(s) filed under 37 CFR 1.53(d). This license is not retroactive.

The grant of a license does not in any way lessen the responsibility of a licensee for the security of the subject matter as imposed by any Government contract or the provisions of existing laws relating to espionage and the national security or the export of technical data. Licensees should apprise themselves of current regulations especially with respect to certain countries, of other agencies, particularly the Office of Defense Trade Controls, Department of State (with respect to Arms, Munitions and Implements of War (22 CFR 121-128)); the Bureau of Industry and Security, Department of Commerce (15 CFR parts 730-774); the Office of Foreign AssetsControl, Department of Treasury (31 CFR Parts 500+) and the Department of Energy.

NOT GRANTED

No license under 35 U.S.C. 184 has been granted at this time, if the phrase "IF REQUIRED, FOREIGN FILING LICENSE GRANTED" DOES NOT appear on this form. Applicant may still petition for a license under 37 CFR 5.12, if a license is desired before the expiration of 6 months from the filing date of the application. If 6 months has lapsed from the filing date of this application and the licensee has not received any indication of a secrecy order under 35 U.S.C. 181, the licensee may foreign file the application pursuant to 37 CFR 5.15(b).

UNITED STATES PATENT AND TRADEMARK OFFICE

UNITED STATES DEPARTMENT OF COMMERCE
United States Patent and Trademark Office
Address: COMMISSIONER FOR PATENTS
P.O. Box 1450
Alexandria, Virginia 22313-1450
www.uspto.gov

MURATA MANUFACTURING COMPANY, LTD.
C/O KEATING & BENNETT, LLP
1800 Alexander Bell Drive
SUITE 200
Reston, VA 20191

Mail Date: 04/20/2010

Applicant	: Seiji Goto	: DECISION ON REQUEST FOR
Patent Number	: 7595716	: RECALCULATION of PATENT
Issue Date	: 09/29/2009	: TERM ADJUSTMENT IN VIEW
Appliction No	: 12/185,399	: OF WYETH AND NOTICE OF INTENT TO
Filed	: 08/04/2008	: ISSUE CERTIFICATE OF CORRECTION
		:

The Request for Recalculation is **GRANTED** to the extent indicated.

The patent term adjustment has been determined to be **0** days. The USPTO will *sua sponte* issue a certificate of correction reflecting the amount of PTA days determined by the recalculation.

Prior to the issuance of the certificate of correction, the USPTO will afford patentee an opportunity to be heard and request reconsideration. Accordingly, patentee has **one month or thirty (30) days**, whichever is longer, to file a request for reconsideration of this patent term adjustment calculation. See 35 U.S.C. 154(b)(3)(B)(ii) and 37 CFR 1.322(a)(4). No extensions of time will be granted under 37 CFR 1.136.

Patentee should use document code PET.OP if electronically filing a request for reconsideration of this patent term adjustment calculation. The patentee must also include the information required by 37 CFR 1.705(b)(2) and the fee required by 37 CFR 1.18(e). If patentee does not file a timely request for reconsideration of this patent term adjustment calculation including the information required by 37 CFR 1.705(b)(2) and the fee required by 37 CFR 1.18(e), the USPTO will issue a certificate of correction reflecting the PTA determination noted above.

Patentee should be aware that in order to preserve the right to review in the United States District Court for the District of Columbia of the USPTO patent term adjustment determination, patentee must ensure that he or she also take the steps required under 35 U.S.C. 154(b)(4)(A) in a timely manner. Nothing in the request for recalculation should be construed as providing an alternative time frame for commencing a civil action under 35 U.S.C. 154(b)(4)(A).

Any questions concerning this decision should be directed to the Office of Patent Legal Administration at 571-272-7702.

UNITED STATES PATENT AND TRADEMARK OFFICE

Commissioner for Patents
United States Patent and Trademark Office
P.O. Box 1450
Alexandria, VA 22313-1450
www.uspto.gov

FULBRIGHT & JAWORSKI L.L.P.
600 CONGRESS AVE.
SUITE 2400
AUSTIN TX 78701

COPY MAILED
DEC 19 2008

In re Application of
Ashman, et al.
Application No. 12/185,418
Filed: August 4, 2008
Attorney Docket No. IOWA:101US/10809452
For: IMMUNOMODULATORY OLIOGONUCLEOTIDES AND METHODS OF USE THEREFOR

ON PETITION

This is a decision on the petition under 37 CFR 1.59(b) filed November 14, 2008, requesting the Office expunge a portion of the application file.

The petition is **dismissed**.

Any request for reconsideration of this decision must be submitted within TWO (2) MONTHS from the mail date of this decision. Extensions of time under 37 CFR 1.136(a) are permitted. Petitioners are advised that this is not a final agency decision.

Petitioners request the removal of drawings which were included at the time of the filing of the present application. These drawings were unintentionally filed, as evidenced by the lack of any reference to drawing figures in the specification or claims filed on August 4, 2008.

A petition to expunge a part of the original disclosure must be filed under 37 CFR 1.183, since such a request requires a waiver of the requirements of 37 CFR 1.59(a). Petitions under 37 CFR 1.183 should be directed to the Office of Petitions. The petition must explain why justice requires waiver of the rules to permit the requested material to be expunged. It should be noted that petitions to expunge information which is a part of the original disclosure, such as the specification and drawings, will ordinarily not be favorably entertained. The original disclosures of applications are scanned for record keeping purposes. Accordingly, the grant of a petition to expunge information which is part of the original disclosure would require that the USPTO record of the originally filed application be changed, which may not be possible.

After the mailing of this decision, the file will be returned to the Office of Patent Application Processing for further pre-examination processing and consideration of the reply to the September 16, 2008 Notice to File Missing Parts of Nonprovisional Application, which was filed on November 14, 2008.

Further correspondence with respect to this matter should be addressed as follows:

By mail: Mail Stop PETITION
Commissioner for Patents
Post Office Box 1450
Alexandria, VA 22313-1450

By hand: U.S. Patent and Trademark Office
Customer Service Window, Mail Stop Petition
Randolph Building
401 Dulany Street
Alexandria, VA 22314

By FAX: (571) 273-8300 - ATTN: Office of Petitions

Telephone inquiries concerning this matter may be directed to the undersigned at (571) 272-3230.

Shirene Willis Brantley

Shirene Willis Brantley
Senior Petitions Attorney
Office of Petitions

UNITED STATES PATENT AND TRADEMARK OFFICE

Commissioner for Patents
United States Patent and Trademark Office
P.O. Box 1450
Alexandria, VA 22313-1450
www.uspto.gov

FULBRIGHT & JAWORSKI L.L.P.
600 CONGRESS AVE.
SUITE 2400
AUSTIN TX 78701

MAILED

SEP 24 2009

OFFICE OF PETITIONS

In re Application of
Ashman, et al.
Application No. 12/185,418
Filed: August 4, 2008
Attorney Docket No. IOWA:101US/10809452
For: IMMUNOMODULATORY OLIOGONUCLEOTIDES AND METHODS OF USE THEREFOR

ON PETITION

This is a decision on the petition under 37 CFR 1.183 requesting waiver of 37 CFR 1.59(a). The petition was filed on February 3, 2009.

The petition under 37 CFR 1.183 to waive 37 CFR 1.59(a) is **dismissed**.

Any request for reconsideration of this decision must be submitted within TWO (2) MONTHS from the mail date of this decision. Extensions of time under 37 CFR 1.136(a) are permitted. Petitioners are advised that this is not a final agency decision.

Petitioners request the removal of drawings which were included at the time of the filing of the present application. These drawings were unintentionally filed, as evidenced by the lack of any reference to drawing figures in the specification or claims filed on August 4, 2008.

Petitioners argue that the figures submitted at the time of the filing do not form part of the written disclosure as described in 37 CFR 1.74. Petitioners assert that failure to obtain the drawings removal would cause confusion with respect to the subject matter of the application. Therefore, petitioners request waiver of the requirements of 37 CFR 1.59(a).

Petitioners desire waiver of 37 CFR 1.53(b). For grant of the relief sought in a petition under 37 CFR 1.183, petitioners must show (1) that this is an extraordinary situation where (2) justice requires waiver of the rule. *In re Sivertz*, 227 U.S.P.Q. 255, 256 (Comm'r Pat. 1985).

The "extraordinary circumstances" rationale does not apply in petitioners' situation. Circumstances resulting from applicants' failure to exercise due care, or lack of knowledge of, or failure to properly apply, the patent statutes or rules of practice are not, in any event, extraordinary circumstances where the interests of justice require the granting of extraordinary relief. *See In re Tetrafluor, Inc.*, 17 USPQ2d 1160, 1162 (Comm'r Pats. 1990); *In re Bird &*

Son, Inc. 195 USPQ 586, 588 (Comm'r Pats. 1977); *Huston v. Ladner*, 23 USPQ2d 1910 (Fed. Cir. 1992); *Vincent v. Mossinghoff*, 230 USPQ 621, 625 (D.D.C. 1985).

Justice does not require waiver of the rules in this instance. Petitioners have a suitable remedy on hand for their predicament that does not require the extraordinary remedy of invoking 37 CFR 1.183. It is brought to petitioners' attention that "justice" does not require an extraordinary remedy, when the rules already provide an avenue for achieving petitioners' goals. See Cantello v. Rasmussen, 220 USPQ 664, 664 (Comm'r Pat. 1982). In this case, petitioners assert that failure to remove the drawings would cause confusion with respect to the subject matter of the instant application. It is noted that this application contains method and composition claims. As stated in MPEP 601.01(f), it is the practice of the United States Patent and Trademark Office (PTO) to treat an application that contains at least one process, method, or composition claim as an application for which a drawing is not necessary for an understanding of the invention under 35 U.S.C. 113 (first sentence.) Petitioners should file an amendment canceling the drawings because they are not necessary for the understanding of the invention.

After the mailing of this decision, the file will be returned to the Office of Patent Application Processing for further pre-examination processing.

Telephone inquiries concerning this matter may be directed to Senior Petitions Attorney Shirene Willis Brantley at (571) 272-3230.

Further correspondence with respect to this matter should be addressed as follows:

By mail:
Mail Stop PETITION
Commissioner for Patents
Post Office Box 1450
Alexandria, VA 22313-1450

By hand:
U.S. Patent and Trademark Office
Customer Service Window, Mail Stop Petition
Randolph Building
401 Dulany Street
Alexandria, VA 22314

By FAX:
(571) 273-8300 - ATTN: Office of Petitions

Anthony Knight
Supervisor
Office of Petitions

UNITED STATES PATENT AND TRADEMARK OFFICE

UNITED STATES DEPARTMENT OF COMMERCE
United States Patent and Trademark Office
Address: COMMISSIONER FOR PATENTS
P.O. Box 1450
Alexandria, Virginia 22313-1450
www.uspto.gov

APPLICATION NO.	FILING DATE	FIRST NAMED INVENTOR	ATTORNEY DOCKET NO.	CONFIRMATION NO.
12/185,460	08/04/2008	Young-Ho JUNG	0201-0154	9384

7590 04/26/2010

Jefferson IP Law, LLP
1130 Connecticut Ave., NW
Suite 420
Washington, DC 20036

EXAMINER
FEILD, LYNN DIANA

ART UNIT	PAPER NUMBER
2400	

MAIL DATE	DELIVERY MODE
04/26/2010	PAPER

DECISION GRANTING PETITION UNDER 37 CFR 1.138(d)

The declaration of express abandonment is recognized

This is in response to the petition under 37 CFR 1.138(d), requesting for a refund of any previously paid search fee and excess claims fee in the above-identified application.

The petition is granted.

The express abandonment is recognized. Any previously paid search fee and excess claims fee are hereby refunded.

Telephone inquiries should be directed to the Office of Data Management at (571) 272-4200.

Patent Publication Branch
Office of Data Management

Adjustment date: 04/26/2010 NFARKER
08/05/2008 INTERNET 00001773 12185460
02 FC:1111 -510.00 OP

FORM PET651G (Rev. 08/07)

UNITED STATES PATENT AND TRADEMARK OFFICE

Commissioner for Patents
United States Patent and Trademark Office
P.O. Box 1450
Alexandria, VA 22313-1450
www.uspto.gov

FOLEY AND LARDNER LLP
SUITE 500
3000 K STREET NW
WASHINGTON, DC 20007

COPY MAILED
MAR 11 2010

In re Application of	:	
Kingsley Shannon	:	
Application No. 12/185,532	:	DECISION ON PETITION
Filed: August 4, 2008	:	TO WITHDRAW
Attorney Docket No. 5N12.1-360	:	FROM RECORD
	:	

This is a decision on the Request to Withdraw as attorney or agent of record under 37 C.F.R. § 1.36(b), filed December 29, 2009.

The request is **NOT APPROVED** because it is moot.

A review of the file record indicates that the power of attorney to Foley and Lardner LLP has been revoked by the assignee of the patent application on January 7, 2010. Accordingly, the request to withdraw under 37 C.F.R. § 1.36(b) is moot.

All future communications from the Office will continue to be directed to the below-listed address until otherwise notified by applicant.

Telephone inquires concerning this decision should be directed to Terri Johnson at 571-272-2991.

Terri Johnson
Petitions Examiner
Office of Petitions

cc: **GARDNER GROFF GREENWALD & VILLANUEVA, PC**
2018 POWERS FERRY ROAD
SUITE 800
ATLANTA, GA 30339

UNITED STATES PATENT AND TRADEMARK OFFICE

Commissioner for Patents
United States Patent and Trademark Office
P.O. Box 1450
Alexandria, VA 22313-1450
www.uspto.gov

BIRCH STEWART KOLASCH & BIRCH
PO BOX 747
FALLS CHURCH, VA 22040-0747

COPY MAILED

NOV 2 4 2008

OFFICE OF PETITIONS

In re Application of	:	
Shigenobu Ikenaga et al	:	
Application No. 12/185,547	:	DECISION ON PETITION
Filed: August 4, 2008	:	
Attorney Docket No. 1155-0286PUS3	:	

This is a decision on the petition under 37 CFR 1.182, filed, September 30, 2008, to change the name of the third named inventor "Hiroshi Takayasu" to – Hiroshi Hoya --.

The petition is **GRANTED**.

Office records have been updated to reflect the inventor's change of name. A corrected Filing Receipt, which reflects the inventor's change of name, accompanies this decision on petition.

Any questions concerning this matter may be directed to Irvin Dingle at (571) 272-3210.

Any questions concerning the examination procedures or status of the application should be directed to the Technology Center.

Irvin Dingle
Petition Examiner
Office of Petitions

Attachment: corrected Filing Receipt

UNITED STATES PATENT AND TRADEMARK OFFICE

UNITED STATES DEPARTMENT OF COMMERCE
United States Patent and Trademark Office
Address: COMMISSIONER FOR PATENTS
P.O. Box 1450
Alexandria, Virginia 22313-1450
www.uspto.gov

APPLICATION NUMBER	FILING or 371(c) DATE	GRP ART UNIT	FIL FEE REC'D	ATTY.DOCKET.NO	TOT CLAIMS	IND CLAIMS
12/185,547	08/04/2008	1796	1550	1155-0286PUS3	3	1

CONFIRMATION NO. 9521

CORRECTED FILING RECEIPT

2292
BIRCH STEWART KOLASCH & BIRCH
PO BOX 747
FALLS CHURCH, VA 22040-0747

OC000000033200144

Date Mailed: 11/20/2008

Receipt is acknowledged of this non-provisional patent application. The application will be taken up for examination in due course. Applicant will be notified as to the results of the examination. Any correspondence concerning the application must include the following identification information: the U.S. APPLICATION NUMBER, FILING DATE, NAME OF APPLICANT, and TITLE OF INVENTION. Fees transmitted by check or draft are subject to collection. Please verify the accuracy of the data presented on this receipt. **If an error is noted on this Filing Receipt, please submit a written request for a Filing Receipt Correction. Please provide a copy of this Filing Receipt with the changes noted thereon. If you received a "Notice to File Missing Parts" for this application, please submit any corrections to this Filing Receipt with your reply to the Notice. When the USPTO processes the reply to the Notice, the USPTO will generate another Filing Receipt incorporating the requested corrections**

Applicant(s)

Shigenobu Ikenaga, Sodegaura-shi, JAPAN;
Keiji Okada, Sodegaura-shi, JAPAN;
Hiroshi Hoya, Ichihara-shi, JAPAN;
Norihide Inoue, Ichihara-shi, JAPAN;
Naritoshi Hirota, Sodegaura-shi, JAPAN;
Hiromu Kaneyoshi, Sodegaura-shi, JAPAN;
Munehito Funaya, Sodegaura-shi, JAPAN;
Koji Kawai, Sodegaura-shi, JAPAN;
Nobuo Kawahara, Sodegaura-shi, JAPAN;
Shinichi Kojoh, Sodegaura-shi, JAPAN;
Norio Kashiwa, Sodegaura-shi, JAPAN;
Ryoji Mori, Sodegaura-shi, JAPAN;

Power of Attorney: The patent practitioners associated with Customer Number 02292

Domestic Priority data as claimed by applicant

This application is a DIV of 10/550,017 06/29/2006
which is a 371 of PCT/JP03/16972 12/26/2003

Foreign Applications

JAPAN 2003-090161 03/28/2003

Request to Retrieve - This application either claims priority to one or more applications filed in an intellectual property Office that participates in the Priority Document Exchange (PDX) program or contains a proper **Request to**

Retrieve Electronic Priority Application(s) (PTO/SB/38 or its equivalent). Consequently, the USPTO will attempt to electronically retrieve these priority documents.

If Required, Foreign Filing License Granted: 08/20/2008

The country code and number of your priority application, to be used for filing abroad under the Paris Convention, is **US 12/185,547**

Projected Publication Date: 02/05/2009

Non-Publication Request: No

Early Publication Request: No

Title

PROPYLENE COPOLYMER, POLYPROPYLENE COMPOSITION AND USES THEREOF, TRANSITION METAL COMPOUND AND OLEFIN POLYMERIZATION CATALYST

Preliminary Class

525

PROTECTING YOUR INVENTION OUTSIDE THE UNITED STATES

Since the rights granted by a U.S. patent extend only throughout the territory of the United States and have no effect in a foreign country, an inventor who wishes patent protection in another country must apply for a patent in a specific country or in regional patent offices. Applicants may wish to consider the filing of an international application under the Patent Cooperation Treaty (PCT). An international (PCT) application generally has the same effect as a regular national patent application in each PCT-member country. The PCT process **simplifies** the filing of patent applications on the same invention in member countries, but **does not result** in a grant of "an international patent" and does not eliminate the need of applicants to file additional documents and fees in countries where patent protection is desired.

Almost every country has its own patent law, and a person desiring a patent in a particular country must make an application for patent in that country in accordance with its particular laws. Since the laws of many countries differ in various respects from the patent law of the United States, applicants are advised to seek guidance from specific foreign countries to ensure that patent rights are not lost prematurely.

Applicants also are advised that in the case of inventions made in the United States, the Director of the USPTO must issue a license before applicants can apply for a patent in a foreign country. The filing of a U.S. patent application serves as a request for a foreign filing license. The application's filing receipt contains further information and guidance as to the status of applicant's license for foreign filing.

Applicants may wish to consult the USPTO booklet, "General Information Concerning Patents" (specifically, the section entitled "Treaties and Foreign Patents") for more information on timeframes and deadlines for filing foreign patent applications. The guide is available either by contacting the USPTO Contact Center at 800-786-9199, or it can be viewed on the USPTO website at http://www.uspto.gov/web/offices/pac/doc/general/index.html.

For information on preventing theft of your intellectual property (patents, trademarks and copyrights), you may wish to consult the U.S. Government website, http://www.stopfakes.gov. Part of a Department of Commerce initiative, this website includes self-help "toolkits" giving innovators guidance on how to protect intellectual property in specific countries such as China, Korea and Mexico. For questions regarding patent enforcement issues, applicants may call the U.S. Government hotline at 1-866-999-HALT (1-866-999-4158).

LICENSE FOR FOREIGN FILING UNDER

Title 35, United States Code, Section 184

Title 37, Code of Federal Regulations, 5.11 & 5.15

GRANTED

The applicant has been granted a license under 35 U.S.C. 184, if the phrase "IF REQUIRED, FOREIGN FILING LICENSE GRANTED" followed by a date appears on this form. Such licenses are issued in all applications where the conditions for issuance of a license have been met, regardless of whether or not a license may be required as set forth in 37 CFR 5.15. The scope and limitations of this license are set forth in 37 CFR 5.15(a) unless an earlier license has been issued under 37 CFR 5.15(b). The license is subject to revocation upon written notification. The date indicated is the effective date of the license, unless an earlier license of similar scope has been granted under 37 CFR 5.13 or 5.14.

This license is to be retained by the licensee and may be used at any time on or after the effective date thereof unless it is revoked. This license is automatically transferred to any related applications(s) filed under 37 CFR 1.53(d). This license is not retroactive.

The grant of a license does not in any way lessen the responsibility of a licensee for the security of the subject matter as imposed by any Government contract or the provisions of existing laws relating to espionage and the national security or the export of technical data. Licensees should apprise themselves of current regulations especially with respect to certain countries, of other agencies, particularly the Office of Defense Trade Controls, Department of State (with respect to Arms, Munitions and Implements of War (22 CFR 121-128)); the Bureau of Industry and Security, Department of Commerce (15 CFR parts 730-774); the Office of Foreign AssetsControl, Department of Treasury (31 CFR Parts 500+) and the Department of Energy.

NOT GRANTED

No license under 35 U.S.C. 184 has been granted at this time, if the phrase "IF REQUIRED, FOREIGN FILING LICENSE GRANTED" DOES NOT appear on this form. Applicant may still petition for a license under 37 CFR 5.12, if a license is desired before the expiration of 6 months from the filing date of the application. If 6 months has lapsed from the filing date of this application and the licensee has not received any indication of a secrecy order under 35 U.S.C. 181, the licensee may foreign file the application pursuant to 37 CFR 5.15(b).

UNITED STATES PATENT AND TRADEMARK OFFICE

Commissioner for Patents
United States Patent and Trademark Office
P.O. Box 1450
Alexandria, VA 22313-1450
www.uspto.gov

BIRCH STEWART KOLASCH & BIRCH
PO BOX 747
FALLS CHURCH VA 22040-0747

COPY MAILED

JUN 10 2009

OFFICE OF PETITIONS

In re Application of	:	
Shigenobu IKENAGA et al.	:	
Application No. 12/185,566	:	DECISION ON PETITION
Filed: August 04, 2008	:	
Attorney Docket No. **1155-0286PUS6**	:	

This is a decision on the petition under 37 CFR 1.182, filed, September 30, 2008, to change the name of inventor "Hiroshi Takayasu" to -- Hiroshi Hoya --.

The petition is **GRANTED**.

Office records have been updated to reflect the inventor's change of name. A corrected Filing Receipt, which reflects the inventor's change of name, accompanies this decision on petition.

Any questions concerning this matter may be directed to Tredelle Jackson at (571) 272-2783. Any questions concerning the examination procedures or status of the application should be directed to the Technology Center.

This application is being referred to Technology Center AU 1794 for further processing in due course.

Ramesh Krishnamurthy
Petitions Examiner
Office of Petitions

ATTACHMENT: Corrected Filing Receipt

UNITED STATES PATENT AND TRADEMARK OFFICE

UNITED STATES DEPARTMENT OF COMMERCE
United States Patent and Trademark Office
Address: COMMISSIONER FOR PATENTS
P.O. Box 1450
Alexandria, Virginia 22313-1450
www.uspto.gov

APPLICATION NUMBER	FILING or 371(c) DATE	GRP ART UNIT	FIL FEE REC'D	ATTY.DOCKET.NO	TOT CLAIMS	IND CLAIMS
12/185,566	08/04/2008	1794	1550	1155-0286PUS6	2	1

CONFIRMATION NO. 9548

CORRECTED FILING RECEIPT

2292
BIRCH STEWART KOLASCH & BIRCH
PO BOX 747
FALLS CHURCH, VA 22040-0747

OC000000036277872

Date Mailed: 06/03/2009

Receipt is acknowledged of this non-provisional patent application. The application will be taken up for examination in due course. Applicant will be notified as to the results of the examination. Any correspondence concerning the application must include the following identification information: the U.S. APPLICATION NUMBER, FILING DATE, NAME OF APPLICANT, and TITLE OF INVENTION. Fees transmitted by check or draft are subject to collection. Please verify the accuracy of the data presented on this receipt. **If an error is noted on this Filing Receipt, please submit a written request for a Filing Receipt Correction. Please provide a copy of this Filing Receipt with the changes noted thereon. If you received a "Notice to File Missing Parts" for this application, please submit any corrections to this Filing Receipt with your reply to the Notice. When the USPTO processes the reply to the Notice, the USPTO will generate another Filing Receipt incorporating the requested corrections**

Applicant(s)

Shigenobu Ikenaga, Sodegaura-shi, JAPAN;
Keiji Okada, Sodegaura-shi, JAPAN;
Hiroshi Hoya, Ichihara-shi, JAPAN;
Norihide Inoue, Ichihara-shi, JAPAN;
Naritoshi Hirota, Sodegaura-shi, JAPAN;
Hiromu Kaneyoshi, Sodegaura-shi, JAPAN;
Munehito Funaya, Sodegaura-shi, JAPAN;
Koji Kawai, Sodegaura-shi, JAPAN;
Nobuo Kawahara, Sodegaura-shi, JAPAN;
Shinichi Kojoh, Sodegaura-shi, JAPAN;
Norio Kashiwa, Sodegaura-shi, JAPAN;
Ryoji Mori, Sodegaura-shi, JAPAN;

Power of Attorney: The patent practitioners associated with Customer Number 02292.

Domestic Priority data as claimed by applicant

This application is a DIV of 10/550,017 06/29/2006 PAT 7,488,789
which is a 371 of PCT/JP03/16972 12/26/2003

Foreign Applications

JAPAN 2003-090161 03/28/2003

Request to Retrieve - This application either claims priority to one or more applications filed in an intellectual property Office that participates in the Priority Document Exchange (PDX) program or contains a proper **Request to**

Retrieve Electronic Priority Application(s) (PTO/SB/38 or its equivalent). Consequently, the USPTO will attempt to electronically retrieve these priority documents.

If Required, Foreign Filing License Granted: 08/20/2008

The country code and number of your priority application, to be used for filing abroad under the Paris Convention, is **US 12/185,566**

Projected Publication Date: Not Applicable

Non-Publication Request: No

Early Publication Request: No

Title

PROPYLENE COPOLYMER, POLYPROPYLENE COMPOSITION AND USES THEREOF, TRANSITION METAL COMPOUND AND OLEFIN POLYMERIZATION CATALYST

Preliminary Class

428

PROTECTING YOUR INVENTION OUTSIDE THE UNITED STATES

Since the rights granted by a U.S. patent extend only throughout the territory of the United States and have no effect in a foreign country, an inventor who wishes patent protection in another country must apply for a patent in a specific country or in regional patent offices. Applicants may wish to consider the filing of an international application under the Patent Cooperation Treaty (PCT). An international (PCT) application generally has the same effect as a regular national patent application in each PCT-member country. The PCT process **simplifies** the filing of patent applications on the same invention in member countries, but **does not result** in a grant of "an international patent" and does not eliminate the need of applicants to file additional documents and fees in countries where patent protection is desired.

Almost every country has its own patent law, and a person desiring a patent in a particular country must make an application for patent in that country in accordance with its particular laws. Since the laws of many countries differ in various respects from the patent law of the United States, applicants are advised to seek guidance from specific foreign countries to ensure that patent rights are not lost prematurely.

Applicants also are advised that in the case of inventions made in the United States, the Director of the USPTO must issue a license before applicants can apply for a patent in a foreign country. The filing of a U.S. patent application serves as a request for a foreign filing license. The application's filing receipt contains further information and guidance as to the status of applicant's license for foreign filing.

Applicants may wish to consult the USPTO booklet, "General Information Concerning Patents" (specifically, the section entitled "Treaties and Foreign Patents") for more information on timeframes and deadlines for filing foreign patent applications. The guide is available either by contacting the USPTO Contact Center at 800-786-9199, or it can be viewed on the USPTO website at http://www.uspto.gov/web/offices/pac/doc/general/index.html.

For information on preventing theft of your intellectual property (patents, trademarks and copyrights), you may wish to consult the U.S. Government website, http://www.stopfakes.gov. Part of a Department of Commerce initiative, this website includes self-help "toolkits" giving innovators guidance on how to protect intellectual property in specific countries such as China, Korea and Mexico. For questions regarding patent enforcement issues, applicants may call the U.S. Government hotline at 1-866-999-HALT (1-866-999-4158).

LICENSE FOR FOREIGN FILING UNDER

Title 35, United States Code, Section 184

Title 37, Code of Federal Regulations, 5.11 & 5.15

GRANTED

The applicant has been granted a license under 35 U.S.C. 184, if the phrase "IF REQUIRED, FOREIGN FILING LICENSE GRANTED" followed by a date appears on this form. Such licenses are issued in all applications where the conditions for issuance of a license have been met, regardless of whether or not a license may be required as set forth in 37 CFR 5.15. The scope and limitations of this license are set forth in 37 CFR 5.15(a) unless an earlier license has been issued under 37 CFR 5.15(b). The license is subject to revocation upon written notification. The date indicated is the effective date of the license, unless an earlier license of similar scope has been granted under 37 CFR 5.13 or 5.14.

This license is to be retained by the licensee and may be used at any time on or after the effective date thereof unless it is revoked. This license is automatically transferred to any related applications(s) filed under 37 CFR 1.53(d). This license is not retroactive.

The grant of a license does not in any way lessen the responsibility of a licensee for the security of the subject matter as imposed by any Government contract or the provisions of existing laws relating to espionage and the national security or the export of technical data. Licensees should apprise themselves of current regulations especially with respect to certain countries, of other agencies, particularly the Office of Defense Trade Controls, Department of State (with respect to Arms, Munitions and Implements of War (22 CFR 121-128)); the Bureau of Industry and Security, Department of Commerce (15 CFR parts 730-774); the Office of Foreign AssetsControl, Department of Treasury (31 CFR Parts 500+) and the Department of Energy.

NOT GRANTED

No license under 35 U.S.C. 184 has been granted at this time, if the phrase "IF REQUIRED, FOREIGN FILING LICENSE GRANTED" DOES NOT appear on this form. Applicant may still petition for a license under 37 CFR 5.12, if a license is desired before the expiration of 6 months from the filing date of the application. If 6 months has lapsed from the filing date of this application and the licensee has not received any indication of a secrecy order under 35 U.S.C. 181, the licensee may foreign file the application pursuant to 37 CFR 5.15(b).

UNITED STATES PATENT AND TRADEMARK OFFICE

Commissioner for Patents
United States Patent and Trademark Office
P.O. Box 1450
Alexandria, VA 22313-1450
www.uspto.gov

SUMMA, ADDITON & ASHE, P.A.
11610 NORTH COMMUNITY HOUSE ROAD
SUITE 200
CHARLOTTE NC 28277

COPY MAILED
FEB 05 2010

Applicant: Collins, et al.
Appl. No.: 12/185,575
Filing Date: August 4, 2008
Title: AUTOMATED PROTEIN ANALYZER
Pub. No.: US 2009/0087917 A1
Pub. Date: April 2, 2009

This is a decision on the request for a corrected patent application publication under 37 CFR 1.221(b) or (a), received on April 27, 2009, for the above-identified application.

Applicant requests that the application be republished because the patent application publication contains a material error in wherein "colorimeter" is misprinted with the word "calorimeter" in many instances.

The request is DISMISSED.

37 CFR 1.221(b) is applicable "only when the Office makes a material mistake which is apparent from Office records. Any request for a corrected or revised patent application publication other than as provided in paragraph (a) of this section must be filed within two months from the date of the patent application publication. This period is not extendable." A material mistake must affect the public's ability to appreciate the technical disclosure of the patent application publication, to determine the scope of the patent application publication, or to determine the scope of the provisional rights that an applicant may seek to enforce upon issuance of a patent.[1]

The error noted by requestor wherein phrase "colorimeter" was printed as "calorimeter" is an Office error but the mistake is not a material error under 37 CFR 1.221(b). The error is a typographical error, which is clearly understandable to one of ordinary skill in the art in reading the specification and claims, as the term is also spelled correctly and one of ordinary skill in the art would recognize that the correct term is colorimeter. The mistakes are typographical errors, which do not affect the understanding of the application, as the text of specification and the claims is clearly understandable from reading the specification. The mistake does not affect the public's ability to appreciate the technical disclosure of the patent application publication, or determine the scope of the patent application publication or determine the scope of the provisional rights that an applicant may seek to enforce upon issuance of a patent.

[1] Changes to Implement Eighteen-Month Publication of Patent Applications, 65 FR 57023, 57038 (Sept. 20, 2000), 1239, Off. Gaz. Pat. Office Notices 63, 75 (Oct. 10, 2000) (final rule).

Applicants are advised that a "request for republication of an application previously published" may be filed under 37 CFR 1.221(a). Such a request for republication "must include a copy of the application in compliance with the Office electronic filing system requirements and be accompanied by the publication fee set forth in § 1.18(d) and the processing fee set forth in § 1.17(i)." If the request for republication does not comply with the electronic filing system requirements, the republication will not take place and the publication fee set forth in § 1.18(d) will be refunded. The processing fee will be retained.

Any request for republication under 37 CFR 1.221(a) must be submitted via the EFS system as a "Pre-Grant Publication" and any questions or request for reconsideration of the decision should be addressed as follows:

A guide for filing a request for a Pre-Grant Publication, such as a request for republication, may be found on the link below:

http://www.uspto.gov/ebc/portal/tutorials.htm

Any request for republication under 37 CFR 1.221(a), must be submitted via the EFS system, as a "Pre-Grant Publication" and questions or request for reconsideration of the decision, should be addressed as follows:

By mail to: Mail Stop PGPUB
Commissioner for Patents
P.O. Box 1450
Alexandria, Va. 22313-1450

Inquiries relating to this matter may be directed to Mark Polutta at (571) 272-7709.

Mark Polutta
Senior Legal Advisor
Office of Patent Legal Administration
Office of the Deputy Commissioner
for Patent Examination Policy

UNITED STATES PATENT AND TRADEMARK OFFICE

Commissioner for Patents
United States Patent and Trademark Office
P.O. Box 1450
Alexandria, VA 22313-1450
www.uspto.gov
DIW Nov-08

MCDERMOTT WILL & EMERY LLP
600 13TH STREET, NW
WASHINGTON DC 20005-3096

COPY MAILED

NOV 05 2008

OFFICE OF PETITIONS

In re Application of Egashira et al. Application Number: 12/185578 Filing Date: 08/04/2008 Attorney Docket Number: 079195-0564	DECISION ON PETITION

This is a decision on the "RESPONSE TO NOTICE TO FILE CORRECTED APPLICATION PAPERS AND PETITION FOR DATE OF DEPOSIT" filed on September 19, 2008, which is treated as a petition requesting that the Notice to File Corrected Application Papers be vacated to the extent that it states that that Figure 8C described in the specification appeared to have been omitted from the application.

The petition is granted.

The application was filed on August 4, 2008.

Accordingly, on August 26, 2008, the Office of Patent Application Processing mailed a Notice to File Corrected Application Papers, stating that the application had been accorded a filing date of August 4, 2008, but that, *inter alia*, Figure 8C described in the specification appeared to have been omitted from the application. A substitute specification was also required.

In response, on September 19, 2008, the present petition and a preliminary amendment, including a substitute specification, were filed. Petitioner asserts that the Notice to File Corrected Application Papers is incorrect in that Figure 8C was not omitted on filing. Rather, no Figure 8C was intended to be filed, and the reference to Figure 8C was deleted by a preliminary amendment present on filing.

Upon review, petitioner's contention is well taken. A preliminary amendment deleting the reference to Figure 8C was filed with the application papers deposited on August 4, 2008. Accordingly, the application, as amended on filing by the preliminary amendment filed on August 4, 2008, did not contain a reference to Figure 8C.

The Notice to File Corrected Application Papers mailed on August 26, 2008, was incorrect and is vacated to the extent that it stated that Figure 8C described in the specification appeared to have been omitted.

In view of the above, the petition is granted. As the petition was not necessitated by applicants' error, no petition fee is due and or has been charged.

The application will be processed and examined using the application papers present on filing.

Receipt of the preliminary amendment, including a substitute specification, filed with the present petition is acknowledged.

The application is being returned to the Office of Patent Application Processing for further processing with a filing date of August 4, 2008, using only the application papers filed on that date.

Telephone inquires should be directed to the undersigned at 571-272-3231.

DWood

Douglas I. Wood
Senior Petitions Attorney
Office of Petitions

UNITED STATES PATENT AND TRADEMARK OFFICE

Commissioner for Patents
United States Patent and Trademark Office
P.O. Box 1450
Alexandria, VA 22313-1450
www.uspto.gov

COPY MAILED

SEP 29 2009

OFFICE OF PETITIONS

Goodwin Procter, LLP
Attn: Patent Administrator
135 Commonwealth Drive
Menlo Park, CA 94025-1105

In re Application of	:	
Paul Armstrong et al.	:	
Application No. 12/185,588	:	DECISION ON
Filed: August 4, 2008	:	PETITION TO WITHDRAW
Attorney Docket No. GNE-0090 C1C1	:	FROM RECORD
	:	

This is a decision on the Request to Withdraw as attorney or agent of record under 37 C.F.R. § 1.36(b), filed September 3, 2009.

The request is **NOT APPROVED**.

A review of the file record indicates that Ginger R. Dreger does not have power of attorney in this patent application. Accordingly, the request to withdraw under 37 C.F.R. § 1.36(b) is not applicable.

All future communications from the Office will continue to be directed to the above-listed address until otherwise properly notified by the applicant.

Telephone inquires concerning this decision should be directed to Kimberly Inabinet at 571-272-4618.

Kimberly Inabinet
Petitions Examiner
Office of Petitions

PTO/SB/130 (08-08)
Approved for use through 08/31/2008. OMB 0651- 0031
U.S. Patent and Trademark Office; U.S. DEPARTMENT OF COMMERCE
Under the Paperwork Reduction Act of 1995, no persons are required to respond to a collection of information unless it contains a valid OMB control number

PETITION TO MAKE SPECIAL BASED ON AGE FOR ADVANCEMENT OF EXAMINATION UNDER 37 CFR 1.102(c)(1)

Application Information

Application Number	12185604	Confirmation Number	9621	Filing Date	2008-08-04
Attorney Docket Number (optional)	QMAI.001CP1	Art Unit	2862	Examiner	Unassigned
First Named Inventor	Qi Ning Mai				
Title of Invention	METHOD AND APPARATUS FOR REDUCING DEPOSITS IN PETROLEUM PIPES				

Attention: Office of Petitions

An application may be made special for advancement of examination upon filing of a petition showing that the applicant is 65 years of age, or more. No fee is required with such a petition. See 37 CFR 1.102(c)(1) and MPEP 708.02 (IV).

APPLICANT HEREBY PETITIONS TO MAKE SPECIAL FOR ADVANCEMENT OF EXAMINATION IN THIS APPLICATION UNDER 37 CFR 1.102(c)(1) and MPEP 708.02 (IV) ON THE BASIS OF THE APPLICANT'S AGE.

A grantable petition requires one of the following items:
(1) Statement by one named inventor in the application that he/she is 65 years of age, or more; or
(2) Certification by a registered attorney/agent having evidence such as a birth certificate, passport, driver's license, etc. showing one named inventor in the application is 65 years of age, or more.

Name of Inventor who is 65 years of age, or older

Given Name	Middle Name	Family Name	Suffix
Qi	Ning	Mai	

A signature of the applicant or representative is required in accordance with 37 CFR 1.33 and 10.18.
Please see 37 CFR 1.4(d) for the format of the signature.

Select (1) or (2) :

○ (1) I am an inventor in this application and I am 65 years of age, or more.

◉ (2) I am an attorney or agent registered to practice before the Patent and Trademark Office, and I certify that I am in possession of evidence, and will retain such in the application file record, showing that the inventor listed above is 65 years of age, or more.

Signature	/SPR53538/	Date (YYYY-MM-DD)	2008-08-22
Name	Steven Ruden	Registration Number	53538

PTO/SB/130 (08-08)
Approved for use through 08/31/2008. OMB 0651- 0031
U.S. Patent and Trademark Office; U.S. DEPARTMENT OF COMMERCE
Under the Paperwork Reduction Act of 1995, no persons are required to respond to a collection of information unless it contains a valid OMB control number

Privacy Act Statement

The Privacy Act of 1974 (P.L. 93-579) requires that you be given certain information in connection with your submission of the attached form related to a patent application or patent. Accordingly, pursuant to the requirements of the Act, please be advised that: (1) the general authority for the collection of this information is 35 U.S.C. 2(b)(2); (2) furnishing of the information solicited is voluntary; and (3) the principal purpose for which the information is used by the U.S. Patent and Trademark Office is to process and/or examine your submission related to a patent application or patent. If you do not furnish the requested information, the U.S. Patent and Trademark Office may not be able to process and/or examine your submission, which may result in termination of proceedings or abandonment of the application or expiration of the patent.

The information provided by you in this form will be subject to the following routine uses:

1. The information on this form will be treated confidentially to the extent allowed under the Freedom of Information Act (5 U.S.C. 552) and the Privacy Act (5 U.S.C. 552a). Records from this system of records may be disclosed to the Department of Justice to determine whether the Fr eedom of Information Act requires disclosure of these records.

2. A record from this system of records may be disclosed, as a routine use, in the course of presenting evidence to a court, magistrate, or administrative tribunal, including disclosures to opposing counsel in the course of settlement negotiations.

3. A record in this system of records may be disclosed, as a routine use, to a Member of Congress submitting a request involving an individual, to whom the record pertains, when the individual has requested assistance from the Member with respect to the subject matter of the record.

4. A record in this system of records may be disclosed, as a routine use, to a contractor of the Agency having need for the information in order to perform a contract. Recipients of information shall be required to comply with the requirements of the Privacy Act of 1974, as amended, pursuant to 5 U.S.C. 552a(m).

5. A record related to an International Application filed under the Patent Cooperation Treaty in this system of records may be disclosed, as a routine use, to the International Bureau of the World Intellectual Property Organization, pursuant to the Patent Cooperation Treaty.

6. A record in this system of records may be disclosed, as a routine use, to another federal agency for purposes of National Security review (35 U.S.C. 181) and for review pursuant to the Atomic Energy Act (42 U.S.C. 218(c)).

7. A record from this system of records may be disclosed, as a routine use, to the Administrator, General Services, or his/her designee, during an inspection of records conducted by GSA as part of that agency's responsibility to recommend improvements in records management practices and programs, under authority of 44 U.S.C. 2904 and 2906. Such disclosure shall be made in accordance with the GSA regulations governing inspection of records for this purpose, and any other relevant (i.e., GSA or Commerce) directive. Such disclosure shall not be used to make determinations about indivi duals.

8. A record from this system of records may be disclosed, as a routine use, to the public after either publication of the application pursuant to 35 U.S.C. 122(b) or issuance of a patent pursuant to 35 U.S.C. 151. Further, a record may be disclosed, subject to the limitations of 37 CFR 1.14, as a routine use, to the public if the record was filed in an application which became abandoned or in which the proceedings were terminated and which application is referenced by either a published application, an application open to public inspections or an issued patent.

9. A record from this system of records may be disclosed, as a routine use, to a Federal, State, or local law enforcement agency, if the USPTO becomes aware of a violation or potential violation of law or regulation.

UNITED STATES PATENT AND TRADEMARK OFFICE

Commissioner for Patents
United States Patent and Trademark Office
P.O. Box 1450
Alexandria, VA 22313-1450
www.uspto.gov

In re Application of
Qi Ning Mai

Application No. 12185604

Filed: August 4,2008

Attorney Docket No. QMAI.001CP1

:DECISION ON PETITION TO MAKE SPECIAL
:UNDER 37 CFR 1.102(c)(1)

This is a decision on the electronic petition under 37 CFR 1.102 (c)(1), filed 22-AUG-2008 to make the above-identified application special based on applicant's age as set forth in MPEP § 708.02, Section IV.

The petition is **GRANTED**.

A grantable petition to make an application special under 37 CFR 1.102(c)(1), MPEP § 708.02, Section IV: Applicant's Age must include a statement by applicant or a registered practitioner having evidence that applicant is at least 65 years of age. No fee is required.

Accordingly, the above-identified application has been accorded "special" status and will be taken up for action by the examiner upon the completion of all pre-examination processing.

Telephone inquiries concerning this electronic decision should be directed to the Electronic Business Center at 866-217-9197.

All other inquiries concerning either the examination or status of the application should be directed to the Technology Center.

UNITED STATES PATENT AND TRADEMARK OFFICE

UNITED STATES DEPARTMENT OF COMMERCE
United States Patent and Trademark Office
Address: COMMISSIONER FOR PATENTS
P.O. Box 1450
Alexandria, Virginia 22313-1450
www.uspto.gov

APPLICATION NO.	FILING DATE	FIRST NAMED INVENTOR	ATTORNEY DOCKET NO.	CONFIRMATION NO.
12/185,637	08/04/2008	Satoshi Numata	112857-1399	9686

7590 09/15/2009

K&L Gates LLP
P. O. BOX 1135
CHICAGO, IL 60690

EXAMINER
YE, LIN

ART UNIT	PAPER NUMBER
2622	

NOTIFICATION DATE	DELIVERY MODE
09/15/2009	ELECTRONIC

DECISION GRANTING PETITION UNDER 37 CFR 1.138(d)

The declaration of express abandonment is recognized

This is in response to the petition under 37 CFR 1.138(d), requesting for a refund of any previously paid search fee and excess claims fee in the above-identified application.

The petition is granted.

The express abandonment is recognized. Any previously paid search fee and excess claims fee are hereby refunded.

Telephone inquiries should be directed to the Office of Data Management at (571) 272-4200.

Mimi Farmer

Patent Publication Branch
Office of Data Management

Adjustment date: 09/14/2009 NFARMER
08/05/2008 INTEFSW 00003272 021818 12185637
02 FC:1111 510.00 CR
05 FC:1201 840.00 CR

FORM PET651G (Rev. 08/07)

UNITED STATES PATENT AND TRADEMARK OFFICE

Commissioner for Patents
United States Patent and Trademark Office
P.O. Box 1450
Alexandria, VA 22313-1450
www.uspto.gov

Neifeld IP Law, PC
4813-B Eisenhower Avenue
Alexandria, VA 22304

COPY MAILED

DEC 3 1 2009

OFFICE OF PETITIONS

In re Application of	:	
William M. Anthony	:	
Application No. 12/185,684	:	DECISION ON PETITION
Filed: August 4, 2008	:	TO WITHDRAW
Attorney Docket No. X2YA0017U-US2	:	FROM RECORD
	:	

This is a decision on the Request to Withdraw as attorney or agent of record under 37 C.F.R. § 1.36(b), filed October 30, 2009.

The request is **NOT APPROVED** because it is moot.

A review of the file record indicates that the power of attorney to Neifeld IP Law, LLP has been revoked by the assignee of the patent application on November 25, 2009. Accordingly, the request to withdraw under 37 C.F.R. § 1.36(b) is moot.

All future communications from the Office will continue to be directed to the below-listed address until otherwise notified by applicant.

Telephone inquires concerning this decision should be directed to Terri Johnson at 571-272-2991.

Terri Johnson
Petitions Examiner
Office of Petitions

cc: **Kenneth C. Spafford**
708 Smithson Ave.
Erie, PA 16511

UNITED STATES PATENT AND TRADEMARK OFFICE

Commissioner for Patents
United States Patent and Trademark Office
P.O. Box 1450
Alexandria, VA 22313-1450
www.uspto.gov

FISH & RICHARDSON P.C.
P.O. BOX 1022
MINNEAPOLIS, MN 55440-1022

COPY MAILED
FEB 02 2010

In re Application of	:	
Jeffrey Drue David, et al.	:	
Application No.: 12/185,719	:	ON PETITION
Filed: August 4, 2008	:	
Atty Docket No.: 009942/C/03/USA/CMP/CMP/M	:	

This is a decision on the petition, filed January 29, 2010, under 37 CFR 1.313(c)(2) to withdraw the above-identified application from issue after payment of the issue fee.

The petition is **GRANTED**.

The above-identified application is withdrawn from issue for consideration of a submission under 37 CFR 1.114 (request for continued examination). See 37 CFR 1.313(c)(2).

Petitioner is advised that the issue fee paid on December 17, 22009, cannot be refunded. If, however, this application is again allowed, petitioner may request that it be applied towards the issue fee required by the new Notice of Allowance.[1]

Telephone inquiries relating to this decision should be directed to the undersigned at (571) 272-3204.

The application is being referred to Technology Center AU 2121 for further processing of the request for continued examination under 37 CFR 1.114 and for consideration of the concurrently filed Information Disclosure Statement (IDS).

/SDB/

Sherry D. Brinkley
Petitions Examiner
Office of Petitions

[1] *The request to apply the issue fee to the new Notice may be satisfied by completing and returning the new Part B – Fee(s) Transmittal Form (along with any balance due at the time of submission). Petitioner is advised that the Issue Fee Transmittal Form must be completed and timely submitted to avoid abandonment of the application.*

UNITED STATES PATENT AND TRADEMARK OFFICE

Commissioner for Patents
United States Patent and Trademark Office
P.O. Box 1450
Alexandria, VA 22313-1450
www.uspto.gov

innoPad /GTPP
55 South Commercial Street
Manchester NH 03101

MAILED

NOV 19 2009

OFFICE OF PETITIONS

In re Application of	:	
Oscar K. Hsu, et al.	:	
Application No. 12/185,737	:	DECISION ON PETITION
Filed: August 4, 2008	:	
Attorney Docket No. IPD016	:	

This is a decision on the petition under 37 CFR 1.182, filed August 26, 2009, to change the order of the names of the inventors.

The petition is **GRANTED**.

Office records have been corrected to reflect the change in the order of the named inventors. A corrected Filing Receipt, which sets forth the desired order of the named inventors, accompanies this decision on petition.

As authorized, the $400 fee for the petition under 37 CFR 1.182 has been assessed to petitioner's deposit account.

This application is being referred to Technology Center AU 3727 for examination in due course.

Telephone inquiries regarding this decision should be directed to Terri Johnson at (571) 272-2991.

Chris Bottorff
Petitions Examiner
Office of Petitions

ATTACHMENT: Corrected Filing Receipt

UNITED STATES PATENT AND TRADEMARK OFFICE

UNITED STATES DEPARTMENT OF COMMERCE
United States Patent and Trademark Office
Address: COMMISSIONER FOR PATENTS
P.O. Box 1450
Alexandria, Virginia 22313-1450
www.uspto.gov

APPLICATION NUMBER	FILING or 371(c) DATE	GRP ART UNIT	FIL FEE REC'D	ATTY.DOCKET.NO	TOT CLAIMS	IND CLAIMS
12/185,737	08/04/2008	3727	860	IPD016	26	5

CONFIRMATION NO. 9869

CORRECTED FILING RECEIPT

83800
innoPad /GTPP
55 South Commericial Street
Manchester, NH 03101

OC000000038763296

Date Mailed: 11/13/2009

Receipt is acknowledged of this non-provisional patent application. The application will be taken up for examination in due course. Applicant will be notified as to the results of the examination. Any correspondence concerning the application must include the following identification information: the U.S. APPLICATION NUMBER, FILING DATE, NAME OF APPLICANT, and TITLE OF INVENTION. Fees transmitted by check or draft are subject to collection. Please verify the accuracy of the data presented on this receipt. **If an error is noted on this Filing Receipt, please submit a written request for a Filing Receipt Correction. Please provide a copy of this Filing Receipt with the changes noted thereon. If you received a "Notice to File Missing Parts" for this application, please submit any corrections to this Filing Receipt with your reply to the Notice. When the USPTO processes the reply to the Notice, the USPTO will generate another Filing Receipt incorporating the requested corrections**

Applicant(s)

Paul LEFEVRE, Topsfield, MA;
Oscar K. Hsu, Chelmsford, MA;
David Adam Wells, Hudson, NH;
Scott Xin Qiao, Macungie, CA;
Anoop Mathew, Peabody, MA;

Assignment For Published Patent Application

INNOPAD, INC., Peabody, MA

Power of Attorney: The patent practitioners associated with Customer Number 32047

Domestic Priority data as claimed by applicant

This appln claims benefit of 61/044,210 04/11/2008

Foreign Applications

If Required, Foreign Filing License Granted: 08/12/2008

The country code and number of your priority application, to be used for filing abroad under the Paris Convention, is **US 12/185,737**

Projected Publication Date: Not Applicable

Non-Publication Request: No

Early Publication Request: No
**** SMALL ENTITY ****

Title

Chemical Mechanical Planarization Pad With Void Network

Preliminary Class

451

PROTECTING YOUR INVENTION OUTSIDE THE UNITED STATES

Since the rights granted by a U.S. patent extend only throughout the territory of the United States and have no effect in a foreign country, an inventor who wishes patent protection in another country must apply for a patent in a specific country or in regional patent offices. Applicants may wish to consider the filing of an international application under the Patent Cooperation Treaty (PCT). An international (PCT) application generally has the same effect as a regular national patent application in each PCT-member country. The PCT process **simplifies** the filing of patent applications on the same invention in member countries, but **does not result** in a grant of "an international patent" and does not eliminate the need of applicants to file additional documents and fees in countries where patent protection is desired.

Almost every country has its own patent law, and a person desiring a patent in a particular country must make an application for patent in that country in accordance with its particular laws. Since the laws of many countries differ in various respects from the patent law of the United States, applicants are advised to seek guidance from specific foreign countries to ensure that patent rights are not lost prematurely.

Applicants also are advised that in the case of inventions made in the United States, the Director of the USPTO must issue a license before applicants can apply for a patent in a foreign country. The filing of a U.S. patent application serves as a request for a foreign filing license. The application's filing receipt contains further information and guidance as to the status of applicant's license for foreign filing.

Applicants may wish to consult the USPTO booklet, "General Information Concerning Patents" (specifically, the section entitled "Treaties and Foreign Patents") for more information on timeframes and deadlines for filing foreign patent applications. The guide is available either by contacting the USPTO Contact Center at 800-786-9199, or it can be viewed on the USPTO website at http://www.uspto.gov/web/offices/pac/doc/general/index.html.

For information on preventing theft of your intellectual property (patents, trademarks and copyrights), you may wish to consult the U.S. Government website, http://www.stopfakes.gov. Part of a Department of Commerce initiative, this website includes self-help "toolkits" giving innovators guidance on how to protect intellectual property in specific countries such as China, Korea and Mexico. For questions regarding patent enforcement issues, applicants may call the U.S. Government hotline at 1-866-999-HALT (1-866-999-4158).

LICENSE FOR FOREIGN FILING UNDER

Title 35, United States Code, Section 184

Title 37, Code of Federal Regulations, 5.11 & 5.15

GRANTED

The applicant has been granted a license under 35 U.S.C. 184, if the phrase "IF REQUIRED, FOREIGN FILING LICENSE GRANTED" followed by a date appears on this form. Such licenses are issued in all applications where the conditions for issuance of a license have been met, regardless of whether or not a license may be required as

set forth in 37 CFR 5.15. The scope and limitations of this license are set forth in 37 CFR 5.15(a) unless an earlier license has been issued under 37 CFR 5.15(b). The license is subject to revocation upon written notification. The date indicated is the effective date of the license, unless an earlier license of similar scope has been granted under 37 CFR 5.13 or 5.14.

This license is to be retained by the licensee and may be used at any time on or after the effective date thereof unless it is revoked. This license is automatically transferred to any related applications(s) filed under 37 CFR 1.53(d). This license is not retroactive.

The grant of a license does not in any way lessen the responsibility of a licensee for the security of the subject matter as imposed by any Government contract or the provisions of existing laws relating to espionage and the national security or the export of technical data. Licensees should apprise themselves of current regulations especially with respect to certain countries, of other agencies, particularly the Office of Defense Trade Controls, Department of State (with respect to Arms, Munitions and Implements of War (22 CFR 121-128)); the Bureau of Industry and Security, Department of Commerce (15 CFR parts 730-774); the Office of Foreign AssetsControl, Department of Treasury (31 CFR Parts 500+) and the Department of Energy.

NOT GRANTED

No license under 35 U.S.C. 184 has been granted at this time, if the phrase "IF REQUIRED, FOREIGN FILING LICENSE GRANTED" DOES NOT appear on this form. Applicant may still petition for a license under 37 CFR 5.12, if a license is desired before the expiration of 6 months from the filing date of the application. If 6 months has lapsed from the filing date of this application and the licensee has not received any indication of a secrecy order under 35 U.S.C. 181, the licensee may foreign file the application pursuant to 37 CFR 5.15(b).

UNITED STATES PATENT AND TRADEMARK OFFICE

UNITED STATES DEPARTMENT OF COMMERCE
United States Patent and Trademark Office
Address: COMMISSIONER FOR PATENTS
P.O. Box 1450
Alexandria, Virginia 22313-1450
www.uspto.gov

APPLICATION NO.	FILING DATE	FIRST NAMED INVENTOR	ATTORNEY DOCKET NO.	CONFIRMATION NO.
12/185,770	08/04/2008	Charles Ramberg	PA0002US_DECO	9955

EXAMINER

7590 01/30/2009

Charles Ramberg
P.O. Box 351
Los Altos, CA 94022

ART UNIT	PAPER NUMBER
2161	

MAIL DATE	DELIVERY MODE
01/30/2009	PAPER

DECISION DISMISSING PETITION UNDER 37 CFR 1.138(c)

The declaration of express abandonment will not be recognized

This is in response to the petition under 37 CFR 1.138(c), for express abandonment to avoid publication of the above-identified application.

The petition is dismissed.

The express abandonment will **not** be recognized for the reason(s) indicated below:

1. ☑ The petition under 37 CFR 1.138(c) was not filed in sufficient time to permit the appropriate officials to recognize the abandonment and remove the application from the publication process.
2. ☐ The petition was not signed by a party authorized by 37 CFR 1.33(b)(1), (3) or (4).
3. ☐ The Application was published in compliance with 35 U.S.C. 122(b), and it is available on the USPTO web site at http://www.uspto.gov/patft/index.html.
4. ☐ Petition fee was not paid.

The application **has/will be published** as scheduled.

Telephone inquiries should be directed to the Office of Data Management at (571) 272-4200.

Kaletus Buchanan
Patent Publication Branch
Office of Data Management

FORM PET650D (Rev. 08/07)

UNITED STATES PATENT AND TRADEMARK OFFICE

UNITED STATES DEPARTMENT OF COMMERCE
United States Patent and Trademark Office
Address: COMMISSIONER FOR PATENTS
P.O. Box 1450
Alexandria, Virginia 22313-1450
www.uspto.gov

APPLICATION NO.	FILING DATE	FIRST NAMED INVENTOR	ATTORNEY DOCKET NO.	CONFIRMATION NO.
12/185,770	08/04/2008	Charles Ramberg	PA0002US_DECO	9955

EXAMINER

7590 01/30/2009

Charles Ramberg
P.O. Box 351
Los Altos, CA 94022

ART UNIT	PAPER NUMBER
2161	

MAIL DATE	DELIVERY MODE
01/30/2009	PAPER

DECISION GRANTING PETITION UNDER 37 CFR 1.138(d)

The declaration of express abandonment is recognized

This is in response to the petition under 37 CFR 1.138(d), requesting for a refund of any previously paid search fee and excess claims fee in the above-identified application.

The petition is granted.

The express abandonment is recognized. Any previously paid search fee and excess claims fee are hereby refunded.

Telephone inquiries should be directed to the Office of Data Management at (571) 272-4200.

Kakhia Buchanan
Patent Publication Branch
Office of Data Management

Adjustment date: 02/05/2009 KKING1
09/08/2008 INTEFSW 00004875 12185770
02 FC:2111 -255.00 OP

Refund Ref:
02/05/2009 0030066376

Credit Card Refund Total: $255.00

Master C: XXXXXXXXXXXX7482

FORM PET651G (Rev. 08/07)

UNITED STATES PATENT AND TRADEMARK OFFICE

UNITED STATES DEPARTMENT OF COMMERCE
United States Patent and Trademark Office
Address: COMMISSIONER FOR PATENTS
P.O. Box 1450
Alexandria, Virginia 22313-1450
www.uspto.gov

APPLICATION NO.	FILING DATE	FIRST NAMED INVENTOR	ATTORNEY DOCKET NO.	CONFIRMATION NO.
12/185,776	08/04/2008	Lei Chen	AUS920080440US1	9966

80692 7590 03/13/2009
Snell & Wilmer L.L.P. (IBM Corp)
600 Anton Blvd
Suite 1400
Costa Mesa, CA 92626

EXAMINER
CHAN, EDDIE P

ART UNIT	PAPER NUMBER
2183	

MAIL DATE	DELIVERY MODE
03/13/2009	PAPER

Please find below and/or attached an Office communication concerning this application or proceeding.

The time period for reply, if any, is set in the attached communication.

UNITED STATES PATENT AND TRADEMARK OFFICE

Commissioner for Patents
United States Patent and Trademark Office
P.O. Box 1450
Alexandria, VA 22313-1450
www.uspto.gov

March 5, 2009

DIANOOSH SALEHI
SNELL & WILMER L.L.P. (IBM CORP)
600 ANTON BLVD
SUITE 1400
COSTA MESA CA 92626

In re Application of: Lei Chen et al.
Serial No: 12/185,776
Filed: August 4, 2008
Docket: AUS920080440US1
Title: Method and Apparatus for Optimized Method of BHT Banking and Multiple Updates

DECISION ON PETITION TO MAKE SPECIAL FOR NEW APPLICATION UNDER 37 C.F.R. § 1.102 & M.P.E.P. § 708.02

This is a decision on the petition filed on August 4, 2008 to make the above-identified application special for accelerated examination procedure under 37 C.F.R. § 1.102(d).

The petition to make the application special is **GRANTED**.

The application is eligible for accelerated examination and the petition complies with the conditions for granting the application special status pursuant to the "Change to Practice for Petitions in Patent Applications to Make Special and for Accelerated Examination" published June 26, 2006, in the Federal Register. (71 Fed. Reg. 36323).

The prosecution of the instant application will be conducted expeditiously according to the following guidelines.

1. The application will be docketed to an examiner and taken up for action within two weeks of the date of this decision.

2. Restriction Practice:
   If the examiner determines that the claims are not directed to a single invention, a telephone request to elect one single invention will be made pursuant to MPEP 812.01. As a prerequisite to the grant of this petition, the applicant has agreed to make an oral election, by telephone, without traverse. If the applicant refuses to make an election without traverse, or the examiner cannot reach the applicant after a reasonable effort, the examiner will treat the first claimed invention (invention defined by claim 1) as having being constructively elected without traverse for examination.

3. Office action:

If it is determined that, after appropriate consultation, there is a potential rejection or any other issue to be addressed, the examiner will telephone the applicant and arrange an interview to discuss and resolve the issue. An Office action, other than a Notice of Allowance and Fee(s) Due (Notice of Allowance), will not be issued unless either: 1) an interview was conducted but did not result in agreed to action that places the application in condition for allowance, or, 2) a determination is made that an interview would be unlikely to result in the application being placed in condition for allowance, and 3) an internal conference has been held to review any rejection of any claim.

4. Time for Reply:
An Office action other than a Notice of Allowance or a final Office action will set a shortened statutory period of one month or thirty days, whichever is longer, for reply with no extension of time available under 37 CFR 1.136(a). Failure to timely file a reply within this non-extendible period for reply will result in the abandonment of the application.

5. Reply by Applicant:
A timely reply to an Office action other than the Notice of Allowance must be submitted electronically via EFS or EFS-web and limited to addressing the rejections, objections and requirement made. Any amendment that attempts to: 1) add claims which would result in more than three pending independent claims or more than twenty pending total claims; 2) present claims not encompassed by the pre-examination search or an updated accelerated examination support document; or 3) present claims that are directed a non-elected invention or an invention other than that previously claimed and examined in the application, will be treated as not fully responsive and will not be entered.

   For any amendment to the claims (including any new claim) that is not encompassed by the accelerated examination support document, applicant must provide an updated accelerated examination support document that encompasses the amended or new claims at the time of filing of the amendment.

   To proceed expeditiously with the examination, it is recommended that a reply with amendments made to any claim or with any new claim being added be accompanied by an updated accelerated examination support document or a statement explaining how the amended or new claim is supported by the original accelerated examination support document.

6. Information Disclosure Statement (IDS):
Any IDS filed during prosecution must be submitted electronically via EFS or EFS-web, accompanied by an updated accelerated examination support document, and be in compliance with 37 CFR 1.97 and 1.98.

7. Post-Allowance Processing:
To expedite processing of the allowed application into a patent, the applicant must: 1) pay the required fees within one month of the date of the Notice of Allowance, and 2) not file any post allowance papers not required by the Office. In no event may the issue fee be paid and accepted later than three months from the date of the Notice of Allowance.

8. After-Final and Appeal Procedures:

To expedite prosecution, after receiving the final Office action, applicant must: 1) promptly file a notice of appeal, an appeal brief and appeal fees; and 2) not request a pre-appeal brief conference.

Any amendment, affidavit or other evidence filed after final Office action must comply with applicable rules and the requirements outlined in numbered paragraphs 5 and 6 above.

On appeal, the application will proceed according to normal appeal procedures. After appeal, the application will again be treated special.

9. Proceedings Outside the Normal Examination Process:
   If the application becomes involved in a proceeding that is outside the normal examination process (e.g., a secrecy order, national security review, interference proceeding, petitions under 37 CFR 1.181, 182 or 183), the application will be treated special before and after such proceeding.

10. Final Disposition:
    The twelve month goal of this accelerated examination procedure ends with a final disposition. The mailing of a final Office action, a Notice of Allowance, the filing of a Notice of Appeal, or the filing of a Request for Continued Examination (RCE) is the final disposition.

If, during prosecution, a paper is not filed electronically using EFS-web, a reply is filed but is not fully responsive, the application is involved in an appeal, or a proceeding outside normal examination process, the application will still be examined expeditiously, however, the final disposition may occur more than twelve months from the filing of the application.

Any inquiry regarding this decision should be directed to Mano Padmanabhan, Quality Assurance Specialist, (571) 272-4210

/Mano Padmanabhan/

Mano Padmanabhan, Quality Assurance Specialist
Technology Center 2100

RLE

UNITED STATES PATENT AND TRADEMARK OFFICE

UNITED STATES DEPARTMENT OF COMMERCE
United States Patent and Trademark Office
Address: COMMISSIONER FOR PATENTS
P.O. Box 1450
Alexandria, Virginia 22313-1450
www.uspto.gov

APPLICATION NO.	FILING DATE	FIRST NAMED INVENTOR	ATTORNEY DOCKET NO.	CONFIRMATION NO.
12/185,791	08/04/2008	Prashant B. Baliga	IN920070105US1/RKC100035	9994

76089 7590 03/09/2009
CARPENTER & ASSOCIATES
5 PIPESTEM COURT
ROCKVILLE, MD 20854

EXAMINER
BULLOCK JR, LEWIS ALEXANDER

ART UNIT	PAPER NUMBER
2193	

MAIL DATE	DELIVERY MODE
03/09/2009	PAPER

Please find below and/or attached an Office communication concerning this application or proceeding.

The time period for reply, if any, is set in the attached communication.

UNITED STATES PATENT AND TRADEMARK OFFICE

Commissioner for Patents
United States Patent and Trademark Office
P.O. Box 1450
Alexandria, VA 22313-1450
www.uspto.gov

CARPENTER & ASSOCIATES
5 PIPESTEM COURT
ROCKVILLE MD 20854

March 3, 2009

In re Application of:
BALIGA, PRASHANT et al.
Serial No.: 12/185,791
Filed: August 4, 2008
Docket: IN920070105US1/RKC100035
Title: METHOD FOR POLICY BASED ENFORCEMENT OF BUSINESS REQUIREMENTS FOR SOFTWARE INSTALL

DECISION ON PETITION TO MAKE SPECIAL FOR NEW APPLICATION UNDER 37 C.F.R. § 1.102 & M.P.E.P. § 708.02

This is a decision on the petition filed on August 4, 2008 to make the above-identified application special for accelerated examination procedure under 37 C.F.R. § 1.102(d).

The petition to make the application special is **DISMISSED**.

REGULATION AND PRACTICE

A grantable petition to make special under 37 C.F.R. § 1.102(d) and pursuant to the "Change to Practice for Petitions in Patent Applications to Make Special and for Accelerated Examination" published in the Federal Register on June 26, 2006 (71 Fed. Reg. 36323), must satisfy the following conditions:

I. Conditions Regarding the Application:

1. the application must be a non-reissue utility or design application filed under 37 CFR 1.111(a);
2. the application, the petition and the required fees must be filed electronically using the USPTO's electronic filing system (EFS), or EFS-web; if not filed electronically, a statement asserting that EFS and EFS-web were not available during the normal business hours.
3. at the time of filing, the application must be complete under 37 CFR 1.51 and in condition for examination;
4. the application must contain three or fewer independent claims and twenty or fewer total claims and the claims must be directed to a single invention.

II. Conditions Regarding the Petition:

The petition must:

1. be filed with the application;

2. include a statement that applicant agrees not to separately argue the patentability of any dependent claim during any appeal in the application;

3. include a statement that applicant agrees to make an election without traverse in a telephone interview.

4. include a statement that applicant agrees to conduct such an interview when requested by the examiner.

5. include a statement, made based on a good faith belief, that a preexamination search in compliance with the following requirements, was conducted, including an identification of the filed of search by United States class and subclass, where applicable, and for database searches, the search logic or chemical structure or sequence used as a query, the name of the file(s) searched and the database service, and the date of the search.

The preexamination search must:

5.1 involve U.S. patents and patent application publications, foreign patent documents, and non-patent literature, unless the applicant can justify with reasonable certainty that no references more pertinent than those already identified are likely to be found in the eliminated sources and includes such a justification with this statement;

5.2. be directed to the claimed invention and encompass all of the features of the claims, giving the claims the broadest reasonable interpretation;

5.3. encompass the disclosed features that may be claimed.

6. must provide in support of the petition an accelerated examination support document. An accelerated examination support document must include:

6.1. an information disclosure statement (IDS) in compliance with 37 CFR 1.98 citing each reference deemed most closely related to the subject matter of each of the claims;

6.2. an identification of all the limitations in the claims that are disclosed by the reference specifying where the limitation is disclosed in the cited reference;

6.3. a detailed explanation of how each of the claims is patentable over the references cited with particularity required by 37 CFR 1.111(b) and (c);

6.4. a concise statement of the utility of the invention as defined in each of the independent claims (unless the application is a design application);

6.5. a showing of where each limitation of the claims finds support under 35 USC 112, first paragraph, in the written description of the specification. If applicable, the showing must also identify: (1) each means- (or step) plus-function claim element that invokes consideration under 35 USC 112, sixth paragraph; and (2) the structure, material, or acts in the specification that corresponds to each means- (or step) plus-function claim element that invokes consideration under 35 USC 112, sixth paragraph; if the application claims the benefit of one or more applications under title 35, United States Code, the showing must also include where each limitation of the claims finds support under 35 USC 112, first paragraph, in each such application in which such supports exists;

6.6. an identification of any cited references that may be disqualified under 35 USC 103(c).

REVIEW OF FACTS

The conditions I.1 – I.4, II.5.1, II.5.3, II.6.1, II.6.4, II.6.5, and II.6.6 above are considered to have been met. However, the petition fails to comply with conditions II.5.2, II.6.2, and II.6.3 above. Therefore, the petition fails to meet the required conditions to be accorded special status under the accelerated examination procedure.

Regarding the requirement of MPEP § 708.02(a)(I.)(H) and items II.5.2 above, the preexamination search does not encompass all of the features of the claims.

The pre-examination search logic appears to be overly broad as evidenced by the large number of hits per query throughout the database searches. The search should consider individual features by themselves and combinations of features. The search should cover the broadest scope encompassed by the claims as well as claims of narrow and intermediate breadth.

With respect to the database searches, the claim limitations some of which have been identified as patentable features distinguishing the claimed invention from the cited prior art (such as "determining whether the business requisites can be complied without compromising the software prerequisites; on determining that the business prerequisites can be complied, installing the software solution on the computing machine; and on negative determination, notifying a user regarding non-compliance of the business prerequisites" as recited in claim 1) or any search terms covering these limitations do not appear to have been included in the search. Petitioner should review all claim limitations, especially those asserted as patentable distinctions from the cited references to ensure that the search covers these concepts, and update the search and/or provide any clarifications if deemed necessary.

With respect to the search logic identified, and in particular with respect to the instant claim, the text search appears to be incomplete. It is recommended that the following search terms be included in an updated search. Such example search terms (shown below) should be searched in singular or in combination:

((business corporation) with (prerequisite requirement polic$3 guideline)) and ((software program) with (install$5))

((prerequisite requirement polic$3 guideline) with (business corporation install$5 software)) and ((software program) with (install$5))

((prerequisite requirement polic$3 guideline) with (business corporation workplace) with (comply compliance)) and ((software program) with (install$5))

The default proximity operator is OR, the other proximity operators used in EAST are: "adj", "near", "with", and "same".

Note that the above list of terms and synonyms are not meant to be an exhaustive list, merely an example of various terms and synonyms that can be used to produce a more comprehensive prior

art search. Nor should these examples be limited only to those sets of search terms provided. Each search term used should be evaluated for applicable synonyms.

Finally, the following databases should have been included in the search documents:

ACM
IEEE

The additional search recommendations were confirmed with and recommended by a (primary) examiner in the pertinent art area.

Regarding the requirement of MPEP § 708.02(a)(I.)(I)(2) and item 6.2 above, the Petitioner shall provide an identification of all the limitations in the claims that are disclosed by the reference specifying where the limitation is disclosed in the cited reference. In the comparison of claim 1 with the teachings of the Shafer et al., US 2007/0113273 reference, it is not clear which portions of the limitation, *identifying installation prerequisites and business prerequisites based on business policies of a software solution, wherein the software solution may be installed on a computing machine,* are taught by Shafer and which portions are not taught by Shafer. While the Petitioner states generally what Shafer teaches, it is not clear which portions of the limitation map to those teachings. Correction is required. Similarly, in the comparison of claim 1 with the teachings of the Hellier et al., US 2005/0108703 reference, it is not clear which portions of the limitation, *determining whether the business prerequisites and installation prerequisites can be complied without compromising the software prerequisites* are taught by Hellier and which portions are not taught by Hellier. While the Petitioner states generally what Hellier teaches, it is not clear which portions of the limitation map to those teachings. Correction is required.

Regarding the requirement of MPEP § 708.02(a)(I.)(I)(3) and item 6.3 above, the Petitioner should provide a detailed explanation of how each of the claims is patentable over the references cited with particularity required by 37 CFR 1.111(b) and (c). Specifically, the feature reciting, *identifying software prerequisites required for the software solution,* is cited as not being taught by any of the references in section 9B; however, in the Detailed Explanation of Patentability section, the Petitioner does not mention this feature as being a patentable feature. Therefore, it is not clear if this feature is considered to be pertinent to the patentability of the claim, known in the art, or taught by the cited references. Correction is required.

Further, a general allegation that all of the references fail to teach the limitations of claim 1 does not comply with the requirements of this section. The petitioner must <u>specifically</u> properly <u>compare/contrast</u> the claimed invention with respect to the relevant teachings in the prior art in the identified references, and point out the patentable novelty which he or she thinks the claims present in view of the state of the art disclosed by the references cited. Clarification is required.

For these reasons, the petition does not meet the requirement of MPEP § 708.02(a).

Thus, the petition does not meet the conditions II.5.2, II.6.2, and II.6.3 above.

DECISION

For the above-stated reasons, the petition is **dismissed**. The application will therefore be taken up by the examiner for action in its regular turn.

Petitioner is given a single opportunity to perfect the petition. Any request for reconsideration of this decision must be submitted within 1 (one) month or 30 (thirty) days, whichever is longer, (no extension of time under 37 CFR 1.136(a)) from the date of this decision in order to be considered timely. Any request for reconsideration must address the deficiencies indicated above.
Petitioner is reminded that, upon granting of the special status of the application on request for reconsideration, the application will be processed expeditiously. However, due to the dismissal of the instant petition, examination may not be completed within twelve months of the filing date of the application.

Any inquiry regarding this decision should be directed to the undersigned at (571) 272-3591.

_____/Gail Hayes_____
Gail Hayes, Quality Assurance Specialist
Technology Center 2100

UNITED STATES PATENT AND TRADEMARK OFFICE

UNITED STATES DEPARTMENT OF COMMERCE
United States Patent and Trademark Office
Address: COMMISSIONER FOR PATENTS
P.O. Box 1450
Alexandria, Virginia 22313-1450
www.uspto.gov

APPLICATION NO.	FILING DATE	FIRST NAMED INVENTOR	ATTORNEY DOCKET NO.	CONFIRMATION NO.
12/185,791	08/04/2008	Prashant B. Baliga	IN920070105US1/RKC100035	9994

76089 7590 06/18/2009
CARPENTER & ASSOCIATES
5 PIPESTEM COURT
ROCKVILLE, MD 20854

EXAMINER
BULLOCK JR, LEWIS ALEXANDER

ART UNIT	PAPER NUMBER
2193	

MAIL DATE	DELIVERY MODE
06/18/2009	PAPER

Please find below and/or attached an Office communication concerning this application or proceeding.

The time period for reply, if any, is set in the attached communication.

UNITED STATES PATENT AND TRADEMARK OFFICE

Commissioner for Patents
United States Patent and Trademark Office
P.O. Box 1450
Alexandria, VA 22313-1450
www.uspto.gov

6/16/2009

CARPENTER & ASSOCIATES
5 PIPESTEM COURT
ROCKVILLE, MD 20854

In re Application of: Baliga et al.
Serial No.: 12/185,791
Filed: August 4, 2008
Docket: **IN920070105US1/RKC100035**

Title: **METHOD FOR POLICY BASED ENFORCEMENT OF BUSINESS REQUIREMENTS FOR SOFTWARE INSTALL**

DECISION ON PETITION TO MAKE SPECIAL FOR NEW APPLICATION UNDER 37 C.F.R. § 1.102 & M.P.E.P. § 708.02

This is a decision on the renewed petition filed on April 9, 2009 to make the above- identified application special for accelerated examination procedure under 37 C.F.R. § 1.102(d).

The original petition, submitted on August 4, 2008 was dismissed in the decision mailed on March 9, 2009.

The petition to make the application special is **GRANTED**.

The application is eligible for accelerated examination and the petition complies with the conditions for granting the application special status pursuant to the "Change to Practice for Petitions in Patent Applications to Make Special and for Accelerated Examination" published June 26, 2006, in the Federal Register. (71 Fed. Reg. 36323).

The prosecution of the instant application will be conducted expeditiously according to the following guidelines.

1. The application will be docketed to an examiner and taken up for action within two weeks of the date of this decision.

2. Restriction Practice:
   If the examiner determines that the claims are not directed to a single invention, a telephone request to elect one single invention will be made pursuant to MPEP 812.01. As a prerequisite to the grant of this petition, the applicant has agreed to make an oral election, by telephone, without traverse. If the applicant refuses to make an election without traverse, or the examiner cannot reach the applicant after a reasonable effort, the

examiner will treat the first claimed invention (invention defined by claim 1) as having being constructively elected without traverse for examination.

3. Office action:
If it is determined that, after appropriate consultation, there is a potential rejection or any other issue to be addressed, the examiner will telephone the applicant and arrange an interview to discuss and resolve the issue. An Office action, other than a Notice of Allowance and Fee(s) Due (Notice of Allowance), will not be issued unless either: 1) an interview was conducted but did not result in agreed to action that places the application in condition for allowance, or, 2) a determination is made that an interview would be unlikely to result in the application being placed in condition for allowance, and 3) an internal conference has been held to review any rejection of any claim.

4. Time for Reply:
An Office action other than a Notice of Allowance or a final Office action will set a shortened statutory period of one month or thirty days, whichever is longer, for reply with no extension of time available under 37 CFR 1.136(a). Failure to timely file a reply within this non-extendible period for reply will result in the abandonment of the application.

5. Reply by Applicant:
A timely reply to an Office action other than the Notice of Allowance must be submitted electronically via EFS or EFS-web and limited to addressing the rejections, objections and requirement made. Any amendment that attempts to: 1) add claims which would result in more than three pending independent claims or more than twenty pending total claims; 2) present claims not encompassed by the pre-examination search or an updated accelerated examination support document; or 3) present claims that are directed a non-elected invention or an invention other than that previously claimed and examined in the application, will be treated as not fully responsive and will not be entered.

   For any amendment to the claims (including any new claim) that is not encompassed by the accelerated examination support document, applicant must provide an updated accelerated examination support document that encompasses the amended or new claims at the time of filing of the amendment.

   To proceed expeditiously with the examination, it is recommended that a reply with amendments made to any claim or with any new claim being added be accompanied by an updated accelerated examination support document or a statement explaining how the amended or new claim is supported by the original accelerated examination support document.

6. Information Disclosure Statement (IDS):
Any IDS filed during prosecution must be submitted electronically via EFS or EFS-web, accompanied by an updated accelerated examination support document, and be in compliance with 37 CFR 1.97 and 1.98.

7. Post-Allowance Processing:

To expedite processing of the allowed application into a patent, the applicant must: 1) pay the required fees within one month of the date of the Notice of Allowance, and 2) not file any post allowance papers not required by the Office. In no event may the issue fee be paid and accepted later than three months from the date of the Notice of Allowance.

8. After-Final and Appeal Procedures:
   To expedite prosecution, after receiving the final Office action, applicant must: 1) promptly file a notice of appeal, an appeal brief and appeal fees; and 2) not request a pre-appeal brief conference.

   Any amendment, affidavit or other evidence filed after final Office action must comply with applicable rules and the requirements outlined in numbered paragraphs 5 and 6 above.

   On appeal, the application will proceed according to normal appeal procedures. After appeal, the application will again be treated special.

9. Proceedings Outside the Normal Examination Process:
   If the application becomes involved in a proceeding that is outside the normal examination process (e.g., a secrecy order, national security review, interference proceeding, petitions under 37 CFR 1.181, 182 or 183), the application will be treated special before and after such proceeding.

10. Final Disposition:
    The twelve-month goal of this accelerated examination procedure ends with a final disposition. The mailing of a final Office action, a Notice of Allowance, the filing of a Notice of Appeal, or the filing of a Request for Continued Examination (RCE) is the final disposition.

If, during prosecution, a paper is not filed electronically using EFS-web, a reply is filed but is not fully responsive, the application is involved in an appeal, or a proceeding outside normal examination process, the application will still be examined expeditiously, however, the final disposition may occur more than twelve months from the filing of the application. In addition, Applicant is reminded that due to the dismissal of the previous petition submission, examination may not be completed within twelve months of the filing date of the application.

Any inquiry regarding this decision should be directed to Gail Hayes, Quality Assurance Specialist, at (571) 272-3591. If attempts to reach the undersigned by telephone are unsuccessful, Kakali Chaki, Quality Assurance Specialist, can be reached at (571) 272-3719.

_____/Gail Hayes/_____

WQAS 2110
Technology Center 2100
Computer Architecture, Software and Information Security

UNITED STATES PATENT AND TRADEMARK OFFICE

Commissioner for Patents
United States Patent and Trademark Office
P.O. Box 1450
Alexandria, VA 22313-1450
www.uspto.gov

COPY MAILED

SEP 29 2009

OFFICE OF PETITIONS

Muncy, Geissler, Olds & Lowe, PLLC
P.O. Box 1364
Fairfax, VA 22038-1364

In re Application of	:	
Matthias Lust et al.	:	
Application No. 12/185,792	:	DECISION ON PETITION
Filed: August 4, 2008	:	TO WITHDRAW
Attorney Docket No. 1005/0128PUS1	:	FROM RECORD
	:	

This is a decision on the Request to Withdraw as attorney or agent of record under 37 C.F.R. § 1.36(b), filed September 3, 2009.

The request is **moot because a revocation of power of attorney has been filed.**

A review of the file record indicates that the power of attorney to Muncy, Geissler, Olds & Lowe, PLLC has been revoked by the assignee of the patent application on September 22, 2009. Accordingly, the request to withdraw under 37 C.F.R. § 1.36(b) is moot.

All future communications from the Office will continue to be directed to the below listed until otherwise notified by applicant.

Telephone inquires concerning this decision should be directed to Kimberly Inabinet at 571-272-4618.

/Kimberly Inabinet/

Kimberly Inabinet
Petitions Examiner
Office of Petitions

cc: Cantor Colburn, LLP
20 Church Street
22nd Floor
Hartford, CT 06103

UNITED STATES PATENT AND TRADEMARK OFFICE

UNITED STATES DEPARTMENT OF COMMERCE
United States Patent and Trademark Office
Address: COMMISSIONER FOR PATENTS
P.O. Box 1450
Alexandria, Virginia 22313-1450
www.uspto.gov

APPLICATION NUMBER	FILING OR 371(C) DATE	FIRST NAMED APPLICANT	ATTY. DOCKET NO./TITLE
12/185,792	08/04/2008	Matthias Lust	1005/0128PUS1

CONFIRMATION NO. 9995

POWER OF ATTORNEY NOTICE

60601
Muncy, Geissler, Olds & Lowe, PLLC
P.O. BOX 1364
FAIRFAX, VA 22038-1364

OC000000038016781

Date Mailed: 09/29/2009

NOTICE REGARDING CHANGE OF POWER OF ATTORNEY

This is in response to the Power of Attorney filed 09/22/2009.

- The Power of Attorney to you in this application has been revoked by the assignee who has intervened as provided by 37 CFR 3.71. Future correspondence will be mailed to the new address of record(37 CFR 1.33).

/kainabinet/

Office of Data Management, Application Assistance Unit (571) 272-4000, or (571) 272-4200, or 1-888-786-0101

UNITED STATES PATENT AND TRADEMARK OFFICE

Commissioner for Patents
United States Patent and Trademark Office
P.O. Box 1450
Alexandria, VA 22313-1450
www.uspto.gov

Ratnerprestia
P.O. Box 980
Valley Forge, PA 19482-0980

COPY MAILED

SEP 03 2008

OFFICE OF PETITIONS

In re Application of	:	
Christopher L. Radl et al.	:	
Application No. 12/185,903	:	DECISION ON PETITION
Filed: August 5, 2008	:	TO MAKE SPECIAL UNDER
Attorney Docket No. BTEC-101US1	:	37 CFR 1.102(c)(1)
	:	

This is a decision on the petition under 37 CFR 1.102(c)(1), filed August 5, 2008, to make the above-identified application special based on applicant's age as set forth in M.P.E.P. § 708.02, Section IV.

The petition is **GRANTED**.

A grantable petition to make an application special under 37 CFR 1.102(c)(1) and MPEP § 708.02, Section IV: Applicant's Age must be accompanied by evidence showing that at least one of the applicants is 65 years of age, or more, such as a birth certificate or a statement by applicant. No fee is required

The instant petition includes a declaration by applicant John R. Boehringer. Accordingly, the above-identified application has been accorded "special" status.

Telephone inquiries concerning this decision should be directed to Kimberly Inabinet at 571-272-4618.

All other inquiries concerning either the examination or status of the application should be directed to the Technology Center.

Upon completion of the pre-examination processing by the Office of Patent Application Processing, this application will be referred to Technology Center Art Unit 3761 for action on the merits commensurate with this decision.

Kimberly Inabinet
Petitions Examiner
Office of Petitions

UNITED STATES PATENT AND TRADEMARK OFFICE

UNITED STATES DEPARTMENT OF COMMERCE
United States Patent and Trademark Office
Address: COMMISSIONER FOR PATENTS
P.O. Box 1450
Alexandria, Virginia 22313-1450
www.uspto.gov

APPLICATION NO.	FILING DATE	FIRST NAMED INVENTOR	ATTORNEY DOCKET NO.	CONFIRMATION NO.
12/185,913	08/05/2008	Akifumi MUTO	082022	1213

EXAMINER

ART UNIT	PAPER NUMBER
2857	

NOTIFICATION DATE	DELIVERY MODE
03/16/2010	ELECTRONIC

7590 03/16/2010
WESTERMAN, HATTORI, DANIELS & ADRIAN, LLP
1250 CONNECTICUT AVENUE, NW
SUITE 700
WASHINGTON, DC 20036

DECISION GRANTING PETITION UNDER 37 CFR 1.138(d)

The declaration of express abandonment is recognized

This is in response to the petition under 37 CFR 1.138(d), requesting for a refund of any previously paid search fee and excess claims fee in the above-identified application.

The petition is granted.

The express abandonment is recognized. Any previously paid search fee and excess claims fee are hereby refunded.

Telephone inquiries should be directed to the Office of Data Management at (571) 272-4200.

Mimi Farmer

Patent Publication Branch
Office of Data Management

[illegible]

[illegible]

[illegible]

Refund Refs
03/15/2010 [illegible]

Credit Card Refund Total: [illegible]

Acct Exp: XXXXXXXXXX[illegible]

Adjustment date: 03/15/2010 NFASYER
08/05/2008 INTEFSW 00002047 12185913
01 FC:1201 -210.00 DP
02 FC:1203 -370.00 DP

FORM PET651G (Rev. 08/07)

UNITED STATES PATENT AND TRADEMARK OFFICE

UNITED STATES DEPARTMENT OF COMMERCE
United States Patent and Trademark Office
Address: COMMISSIONER FOR PATENTS
P.O. Box 1450
Alexandria, Virginia 22313-1450
www.uspto.gov

APPLICATION NO.	FILING DATE	FIRST NAMED INVENTOR	ATTORNEY DOCKET NO.	CONFIRMATION NO.
12/186,072	08/05/2008	Hank F. Kung	UPDI-0174/S4173	1499

23377 7590 09/18/2008
WOODCOCK WASHBURN LLP
CIRA CENTRE, 12TH FLOOR
2929 ARCH STREET
PHILADELPHIA, PA 19104-2891

EXAMINER	
ART UNIT	PAPER NUMBER
1614	

MAIL DATE	DELIVERY MODE
09/18/2008	PAPER

Please find below and/or attached an Office communication concerning this application or proceeding.

The time period for reply, if any, is set in the attached communication.

UNITED STATES PATENT AND TRADEMARK OFFICE

Commissioner for Patents
United States Patent and Trademark Office
P.O. Box 1450
Alexandria, VA 22313-1450
www.uspto.gov

23377
Woodcock Washburn LLP
Cira Centre, 12th Floor
2929 Arch Street
Philadelphia, PA 19104-2891
Portland, OR 97201

SEP 1 8 2008

In re Application of	:
Hank F. Kung	: DECISION ON PETITION TO MAKE
Serial No.: 12/186,072	: SPECIAL FOR NEW APPLICATION
Filed: August 5, 2008	: UNDER 37 C.F.R. § 1.102 & M.P.E.P.
Attorney Docket No.: UPDI-0174/S4173	: § 708.02

This is a supplemental decision on the petition filed August 5, 2008, to make the above-identified application special for accelerated examination procedure under 37 C.F.R. § 1.102(d). This decision supersedes the previous decision mailed on April 2nd 2008.

The petition to make the application special is **DENIED**.

REGULATION AND PRACTICE

A grantable petition to make special under 37 C.F.R. § 1.102(d) and pursuant to the "Change to Practice for Petitions in Patent Applications to Make Special and for Accelerated Examination" published in the Federal Register on June 26, 2006 (71 Fed. Reg. 36323), must satisfy the following conditions:

I. Conditions Regarding the Application:

1. the application must be a non-reissue utility or design application filed under 37 CFR 1.111(a);

2. the application, the petition and the required fees must be filed electronically using the USPTO's electronic filing system (EFS), or EFS-web; if not filed electronically, a statement asserting that EFS and EFS-web were not available during the normal business hours.

3. at the time of filing, the application must be complete under 37 CFR 1.51 and in condition for examination;

4. the application must contain three or fewer independent claims and twenty or fewer total claims and the claims must be directed to a single invention.

II. Conditions Regarding the Petition:

The petition must:

1. be filed with the application;

2. include a statement that applicant agrees not to separately argue the patentability of any dependent claim during any appeal in the application;

3. include a statement that applicant agrees to make an election without traverse in a telephone interview.

4. include a statement that applicant agrees to conduct such an interview when requested by the examiner.

5. include a statement, made based on a good faith belief, that a preexamination search in compliance with the following requirements, was conducted, including an identification of the field of search by United States class and subclass, where applicable, and for database searches, the search logic or chemical structure or sequence used as a query, the name of the file(s) searched and the database service, and the date of the search.

The preexamination search must:

5.1 involve U.S. patents and patent application publications, foreign patent documents, and non-patent literature, unless the applicant can justify with reasonable certainty that no references more pertinent than those already identified are likely to be found in the eliminated sources and includes such a justification with this statement;

5.2. be directed to the claimed invention and encompass all of the features of the claims, giving the claims the broadest reasonable expectation;

5.3. encompass the disclosed features that may be claimed.

6. must provide in support of the petition an accelerated examination support document. An accelerated examination support document must include:

6.1. an information disclosure statement (IDS) in compliance with 37 CFR 1.98 citing each reference deemed most closely related to the subject matter of each of the claims;

6.2. an identification of all the limitations in the claims that are disclosed by the reference specifying where the limitation is disclosed in the cited reference;

6.3. a detailed explanation of how each of the claims is patentable over the references cited with particularity required by 37 CFR 1.111(b) and (c);

6.4. a concise statement of the utility of the invention as defined in each of the independent claims (unless the application is a design application);

6.5. a showing of where each limitation of the claims finds support under 35 U.S.C. 112, first paragraph, in the written description of the specification. If applicable, the showing must also identify: (1) each means- (or step) plus-function claim element that invokes consideration under 35 U.S.C. 112, sixth paragraph; and (2) the structure, material, or acts in the specification that corresponds to each means- (or step) plus-function claim element that invokes consideration under 35 U.S.C. 112, sixth paragraph; if the application claims the benefit of one or more applications under title 35, United States Code, the showing must also include where each limitation of the claims finds support under 35 U.S.C. 112, first paragraph, in each such application in which such supports exists;

6.6. an identification of any cited references that may be disqualified under 35 U.S.C. 103(c).

REVIEW OF FACTS

The petition fails to comply with conditions I.3. as indicated above. Therefore, the petition fails to meet the required conditions to be accorded special status under the accelerated examination procedure.

A Notice to File Missing Parts was mailed on August 13, 2008.

The application as filed is not eligible for the accelerated examination under 37 C.F.R. § 1.102(d) because it was not complete under 37 CFR 1.51 and in condition for examination at the time of filing. The mailing of a Notice to File Missing Parts or a Notice of Incomplete Application is evidence that the application was not complete and in condition for examination at the time of filing.

For the above-stated reasons, the petition is **denied.** The application will therefore be taken up by the examiner for action in its regular turn.

Petitioner is given a single opportunity to perfect the petition. Any request for reconsideration of this decision must be submitted within 1 (one) month or 30 (thirty) days, whichever is longer, from the date of this decision in order to be considered timely. Any request for reconsideration must address the deficiencies indicated above.

Petitioner is reminded that, upon granting of the special status of the application on request for reconsideration, the application will be processed expeditiously. However, due to the dismissal of the instant petition, examination may not be completed within twelve months of the filing date of the application.

Any inquiry regarding this decision should be directed to Dave Nguyen, TQAS TC 1600, at (571) 272-0731.

Dave T Nguyen
TC Quality Assurance Specialist
Technology Center 1600

UNITED STATES PATENT AND TRADEMARK OFFICE

Commissioner for Patents
United States Patent and Trademark Office
P.O. Box 1450
Alexandria, VA 22313-1450
www.uspto.gov

FOLEY AND LARDNER LLP
SUITE 500
3000 K STREET NW
WASHINGTON DC 20007

COPY MAILED
MAY 06 2009
OFFICE OF PETITIONS

In re Application of	:	
Fukuda et al.	:	
Application No. 12/186,081	:	ON PETITION
Filed: August 5, 2008	:	
Attorney Docket No. 040356-0625	:	

This is a decision on the petition under 37 CFR 1.182, filed February 18, 2009, to change the order of the names of the inventors.

The petition is **GRANTED**.

The order of the names of the inventors will be changed as follows:

1. Yoshiyuki FUKUDA
2. Tomoaki FUJIBAYASHI
3. Hideyuki ARAI

This matter is now being referred to Technology Center AU 3663 for examination on the merits.

Telephone inquiries should be directed to the undersigned at (571) 272-3206. All other inquiries should be directed to the Technology Center.

Liana Walsh
Petitions Examiner
Office of Petitions

Enclosure: Corrected Filing Receipt

UNITED STATES PATENT AND TRADEMARK OFFICE

UNITED STATES DEPARTMENT OF COMMERCE
United States Patent and Trademark Office
Address: COMMISSIONER FOR PATENTS
P.O. Box 1450
Alexandria, Virginia 22313-1450
www.uspto.gov

APPLICATION NUMBER	FILING or 371(c) DATE	GRP ART UNIT	FIL FEE REC'D	ATTY.DOCKET.NO	TOT CLAIMS	IND CLAIMS
12/186,081	08/05/2008	3663	1030	040356-0625	9	3

CONFIRMATION NO. 1515

CORRECTED FILING RECEIPT

22428
FOLEY AND LARDNER LLP
SUITE 500
3000 K STREET NW
WASHINGTON, DC 20007

OC000000035821573

Date Mailed: 05/05/2009

Receipt is acknowledged of this non-provisional patent application. The application will be taken up for examination in due course. Applicant will be notified as to the results of the examination. Any correspondence concerning the application must include the following identification information: the U.S. APPLICATION NUMBER, FILING DATE, NAME OF APPLICANT, and TITLE OF INVENTION. Fees transmitted by check or draft are subject to collection. Please verify the accuracy of the data presented on this receipt. **If an error is noted on this Filing Receipt, please submit a written request for a Filing Receipt Correction. Please provide a copy of this Filing Receipt with the changes noted thereon. If you received a "Notice to File Missing Parts" for this application, please submit any corrections to this Filing Receipt with your reply to the Notice. When the USPTO processes the reply to the Notice, the USPTO will generate another Filing Receipt incorporating the requested corrections**

Applicant(s)

Yoshiyuki Fukuda, Kawasaki-shi, JAPAN;
Tomoaki Fujibayashi, Atsugi-shi, JAPAN;
Hideyuki Arai, Isehara-shi, JAPAN;

Assignment For Published Patent Application

NISSAN MOTOR CO., LTD.
HITACHI, LTD.

Power of Attorney: The patent practitioners associated with Customer Number 22428

Domestic Priority data as claimed by applicant

Foreign Applications
JAPAN 2007-205592 08/07/2007

Request to Retrieve - This application either claims priority to one or more applications filed in an intellectual property Office that participates in the Priority Document Exchange (PDX) program or contains a proper **Request to Retrieve Electronic Priority Application(s)** (PTO/SB/38 or its equivalent). Consequently, the USPTO will attempt to electronically retrieve these priority documents.

If Required, Foreign Filing License Granted: 08/20/2008

The country code and number of your priority application, to be used for filing abroad under the Paris Convention, is **US 12/186,081**

Projected Publication Date: Not Applicable

Non-Publication Request: No

Early Publication Request: No

Title

DRIVING FORCE DISTRIBUTION CONTROL METHOD AND DEVICE FOR FOUR WHEEL DRIVE VEHICLE

Preliminary Class

701

PROTECTING YOUR INVENTION OUTSIDE THE UNITED STATES

Since the rights granted by a U.S. patent extend only throughout the territory of the United States and have no effect in a foreign country, an inventor who wishes patent protection in another country must apply for a patent in a specific country or in regional patent offices. Applicants may wish to consider the filing of an international application under the Patent Cooperation Treaty (PCT). An international (PCT) application generally has the same effect as a regular national patent application in each PCT-member country. The PCT process **simplifies** the filing of patent applications on the same invention in member countries, but **does not result** in a grant of "an international patent" and does not eliminate the need of applicants to file additional documents and fees in countries where patent protection is desired.

Almost every country has its own patent law, and a person desiring a patent in a particular country must make an application for patent in that country in accordance with its particular laws. Since the laws of many countries differ in various respects from the patent law of the United States, applicants are advised to seek guidance from specific foreign countries to ensure that patent rights are not lost prematurely.

Applicants also are advised that in the case of inventions made in the United States, the Director of the USPTO must issue a license before applicants can apply for a patent in a foreign country. The filing of a U.S. patent application serves as a request for a foreign filing license. The application's filing receipt contains further information and guidance as to the status of applicant's license for foreign filing.

Applicants may wish to consult the USPTO booklet, "General Information Concerning Patents" (specifically, the section entitled "Treaties and Foreign Patents") for more information on timeframes and deadlines for filing foreign patent applications. The guide is available either by contacting the USPTO Contact Center at 800-786-9199, or it can be viewed on the USPTO website at http://www.uspto.gov/web/offices/pac/doc/general/index.html.

For information on preventing theft of your intellectual property (patents, trademarks and copyrights), you may wish to consult the U.S. Government website, http://www.stopfakes.gov. Part of a Department of Commerce initiative, this website includes self-help "toolkits" giving innovators guidance on how to protect intellectual property in specific countries such as China, Korea and Mexico. For questions regarding patent enforcement issues, applicants may call the U.S. Government hotline at 1-866-999-HALT (1-866-999-4158).

LICENSE FOR FOREIGN FILING UNDER

Title 35, United States Code, Section 184

Title 37, Code of Federal Regulations, 5.11 & 5.15

GRANTED

The applicant has been granted a license under 35 U.S.C. 184, if the phrase "IF REQUIRED, FOREIGN FILING LICENSE GRANTED" followed by a date appears on this form. Such licenses are issued in all applications where

the conditions for issuance of a license have been met, regardless of whether or not a license may be required as set forth in 37 CFR 5.15. The scope and limitations of this license are set forth in 37 CFR 5.15(a) unless an earlier license has been issued under 37 CFR 5.15(b). The license is subject to revocation upon written notification. The date indicated is the effective date of the license, unless an earlier license of similar scope has been granted under 37 CFR 5.13 or 5.14.

This license is to be retained by the licensee and may be used at any time on or after the effective date thereof unless it is revoked. This license is automatically transferred to any related applications(s) filed under 37 CFR 1.53(d). This license is not retroactive.

The grant of a license does not in any way lessen the responsibility of a licensee for the security of the subject matter as imposed by any Government contract or the provisions of existing laws relating to espionage and the national security or the export of technical data. Licensees should apprise themselves of current regulations especially with respect to certain countries, of other agencies, particularly the Office of Defense Trade Controls, Department of State (with respect to Arms, Munitions and Implements of War (22 CFR 121-128)); the Bureau of Industry and Security, Department of Commerce (15 CFR parts 730-774); the Office of Foreign AssetsControl, Department of Treasury (31 CFR Parts 500+) and the Department of Energy.

NOT GRANTED

No license under 35 U.S.C. 184 has been granted at this time, if the phrase "IF REQUIRED, FOREIGN FILING LICENSE GRANTED" DOES NOT appear on this form. Applicant may still petition for a license under 37 CFR 5.12, if a license is desired before the expiration of 6 months from the filing date of the application. If 6 months has lapsed from the filing date of this application and the licensee has not received any indication of a secrecy order under 35 U.S.C. 181, the licensee may foreign file the application pursuant to 37 CFR 5.15(b).

UNITED STATES PATENT AND TRADEMARK OFFICE

Commissioner for Patents
United States Patent and Trademark Office
P.O. Box 1450
Alexandria, VA 22313-1450
www.uspto.gov

SLATER & MATSIL, L.L.P.
17950 PRESTON ROAD
SUITE 1000
DALLAS TX 75252

MAILED
JUL 19 2010
OFFICE OF PETITIONS

In re Application of	:	
Helmut Schneider, et al.	:	DECISION ON PETITION
Application No. 12/186,085	:	TO WITHDRAW
Filed: August 5, 2008	:	FROM RECORD
Attorney Docket No. QIM 2006 P 53905 US	:	

This is a decision on the request to withdraw as attorney of record under 37 CFR § 1.36, filed June 17, 2010.

The request is **NOT APPROVED**.

The request cannot be approved because it lacks a forwarding correspondence address of the first named inventor or a properly intervening assignee.

If the forwarding correspondence address is to the assignee, the Office will only accept correspondence address changes to the most current address information provided for the assignee of the entire interest *that properly became of record under 37 CFR 3.71.* 37 CFR 3.71(c) states:

> *An assignee becomes of record either in a national patent application or a reexamination proceeding by filing a statement in compliance with § 3.73(b) that is signed by a party who is authorized to act on behalf of the assignee.*

The assignee must establish its ownership of the patent to the satisfaction of the Director. In this regard, the statement under 37 CFR 3.73(b) must have either: (i) documentary evidence of a chain of title from the original owner to the assignee (*e.g.*, copy of an executed assignment), and a statement affirming that the documentary evidence of the chain of title from the original owner to the assignee was or concurrently is being submitted for recordation pursuant to § 3.11; or (ii) a statement specifying where documentary evidence of a chain of title from the original owner to the assignee is recorded in the assignment records of the Office (*e.g.*, reel and frame number).

All future communications from the Office will continue to be directed to the above-listed address until otherwise notified by applicant.

Telephone inquires concerning this decision should be directed to the undersigned at (571) 272-2991.

Terri Johnson
Petitions Examiner
Office of Petitions

UNITED STATES PATENT AND TRADEMARK OFFICE

Commissioner for Patents
United States Patent and Trademark Office
P.O. Box 1450
Alexandria, VA 22313-1450
www.uspto.gov

ROBERT PLOTKIN, PC
45 BUTTERNUT CIRCLE
CONCORD MA 01742-1937

COPY MAILED

AUG 19 2009

OFFICE OF PETITIONS

In re Application of	:	
Jerry B. Roberts	:	
Application No. 12/186,130	:	DECISION ON PETITION
Filed: August 5, 2008	:	
Attorney Docket No. R0004-1001	:	

This is a decision on the petition under the unintentional provisions of 37 CFR 1.137(b), filed July 6, 2009, to revive the above-identified application.

The petition is **GRANTED**.

The application became abandoned for failure to reply in a timely manner to the Notice to File Corrected Application Papers (Notice) mailed August 26, 2008. The Notice set a period for reply of two (2) months from the mail date of the Notice. No extensions of time under the provisions of 37 CFR 1.136(a) were obtained. Accordingly, the application became abandoned on October 27, 2008. A Notice of Abandonment was mailed May 4, 2009.

The petition satisfies the requirements of 37 CFR 1.137(b) in that petitioner has supplied (1) Replacement drawings, (2) the petition fee of $810.00, and (3) a proper statement of unintentional delay.

The address given on the petition differs from the address of record. A courtesy copy of this decision is being mailed to the address given on the petition; however, the Office will mail all future correspondence solely to the address of record.

Telephone inquiries concerning this decision should be directed to the undersigned at (571) 272-7751.

This application is being referred to the Office of Patent Application Processing for further processing in accordance with this decision on petition.

Joan Olszewski
Petition Examiner
Office of Petitions

cc: Robert Plotkin
35 Corporate Drive, 4th Floor
Burlington, MA 01803

UNITED STATES PATENT AND TRADEMARK OFFICE

UNITED STATES DEPARTMENT OF COMMERCE
United States Patent and Trademark Office
Address: COMMISSIONER FOR PATENTS
P.O. Box 1450
Alexandria, Virginia 22313-1450
www.uspto.gov

APPLICATION NO.	FILING DATE	FIRST NAMED INVENTOR	ATTORNEY DOCKET NO.	CONFIRMATION NO.
12/186,277	08/05/2008	Shachar Fienblit	IL920080103US1 (105128)	1886

78148 7590 03/19/2009
KING & SPALDING
1180 PEACHTREE ST.
ATLANTA, GA 30309

EXAMINER
BULLOCK JR, LEWIS ALEXANDER

ART UNIT	PAPER NUMBER
2193	

MAIL DATE	DELIVERY MODE
03/19/2009	PAPER

Please find below and/or attached an Office communication concerning this application or proceeding.

The time period for reply, if any, is set in the attached communication.

UNITED STATES PATENT AND TRADEMARK OFFICE

Commissioner for Patents
United States Patent and Trademark Office
P.O. Box 1450
Alexandria, VA 22313-1450
www.uspto.gov

KING & SPALDING
1180 PEACHTREE ST.
ATLANTA GA 30309

In re Application of: FIENBLIT, SHACHAR et al. Serial No.: 12/186,277 Filed: August 5, 2008 Docket: IL920080103US1 (105128) Title: CONCERN BASED HOLE ANALYSIS	DECISION ON PETITION TO MAKE SPECIAL FOR NEW APPLICATION UNDER 37 C.F.R. § 1.102 & M.P.E.P. § 708.02

This is a decision on the petition filed on August 5, 2008 to make the above-identified application special for accelerated examination procedure under 37 C.F.R. § 1.102(d).

The petition to make the application special is **DISMISSED**.

REGULATION AND PRACTICE

A grantable petition to make special under 37 C.F.R. § 1.102(d) and pursuant to the "Change to Practice for Petitions in Patent Applications to Make Special and for Accelerated Examination" published in the Federal Register on June 26, 2006 (71 Fed. Reg. 36323), must satisfy the following conditions:

I. Conditions Regarding the Application:

1. the application must be a non-reissue utility or design application filed under 37 CFR 1.111(a);
2. the application, the petition and the required fees must be filed electronically using the USPTO's electronic filing system (EFS), or EFS-web; if not filed electronically, a statement asserting that EFS and EFS-web were not available during the normal business hours.
3. at the time of filing, the application must be complete under 37 CFR 1.51 and in condition for examination;
4. the application must contain three or fewer independent claims and twenty or fewer total claims and the claims must be directed to a single invention.

II. Conditions Regarding the Petition:

The petition must:

1. be filed with the application;

2. include a statement that applicant agrees not to separately argue the patentability of any dependent claim during any appeal in the application;

3. include a statement that applicant agrees to make an election without traverse in a telephone interview.

4. include a statement that applicant agrees to conduct such an interview when requested by the examiner.

5. include a statement, made based on a good faith belief, that a preexamination search in compliance with the following requirements, was conducted, including an identification of the filed of search by United States class and subclass, where applicable, and for database searches, the search logic or chemical structure or sequence used as a query, the name of the file(s) searched and the database service, and the date of the search.

The preexamination search must:

5.1 involve U.S. patents and patent application publications, foreign patent documents, and non-patent literature, unless the applicant can justify with reasonable certainty that no references more pertinent than those already identified are likely to be found in the eliminated sources and includes such a justification with this statement;

5.2. be directed to the claimed invention and encompass all of the features of the claims, giving the claims the broadest reasonable interpretation;

5.3. encompass the disclosed features that may be claimed.

6. must provide in support of the petition an accelerated examination support document. An accelerated examination support document must include:

6.1. an information disclosure statement (IDS) in compliance with 37 CFR 1.98 citing each reference deemed most closely related to the subject matter of each of the claims;

6.2. an identification of all the limitations in the claims that are disclosed by the reference specifying where the limitation is disclosed in the cited reference;

6.3. a detailed explanation of how each of the claims is patentable over the references cited with particularity required by 37 CFR 1.111(b) and (c);

6.4. a concise statement of the utility of the invention as defined in each of the independent claims (unless the application is a design application);

6.5. a showing of where each limitation of the claims finds support under 35 USC 112, first paragraph, in the written description of the specification. If applicable, the showing must also identify: (1) each means- (or step) plus-function claim element that invokes consideration under 35 USC 112, sixth paragraph; and (2) the structure, material, or acts in the specification that corresponds to each means- (or step) plus-function claim element that invokes consideration under 35 USC 112, sixth paragraph; if the application claims the benefit of one or more applications under title 35, United States Code, the showing must also include where each limitation of the claims finds support under 35 USC 112, first paragraph, in each such application in which such supports exists;

6.6. an identification of any cited references that may be disqualified under 35 USC 103(c).

REVIEW OF FACTS

The conditions I.1–I.4, II.5.3, II.6.1, II.6.4, II.6.5 and II.6.6 above are considered to have been met. However, the petition fails to comply with conditions II.5.1, II.5.2, II.6.2 and II.6.3 above. Therefore, the petition fails to meet the required conditions to be accorded special status under the accelerated examination procedure.

At the outset, it is noted that the claim as filed on page 7 differs from the claim included in the accelerated examination support document (AESD). Specifically, the claim in the AESD recites, *for ranking code coverage* in the first limitation; whereas, the claim as filed recites, *ranking coverage*. Further, the claim in the AESD recites, *code coverage measure* in the second and third limitations; whereas, the claim as filed recites, *coverage measure*. Therefore, it is not clear which claim is correct. Correction is required.

Regarding the requirement of MPEP § 708.02(a)(I.)(I)(2) and item 5.1 above, the preexamination search should identify the field of search by U.S. class and subclass. Petitioner has listed classes 714/25, 35, 38 and 715/126, 127, 130, 131, 132, 141 under the U.S. field of search. Class and subclass combinations 715/126, 127, 130, 131, 132, 141 do not exist. Therefore, it is not clear how these classes were searched. Clarification is required. Further, it appears a complete classification search of each class and subclass was not conducted as the search for these classes was limited by any text query or a set of text queries as it appears on page 1 of the preexamination search document. It is noted that listing only class/subclasses searched will be taken a s representation by the petitioner that each of the patent documents classified under each class/subclass listed in section 8(A) was reviewed in its entirely for subject matter relevant to the claimed invention.

Regarding the requirement of MPEP § 708.02(a)(I.)(I)(2) and item 5.2 above

Regarding the requirement of MPEP§ 708.02(a)(I.)(I)(2) and item 6.2 above, the Petitioner should provide a detailed explanation of how each of the claims is patentable over the references cited with particularity required by 37 CFR 1.111(b) and (c). With respect to section 9B in the AESD, the Petitioner states Kuzim teaches assigning test priorities. These teachings appear to teach the claimed "ordering the code subsets"; however, the Petitioner has not clearly stated whether Kuzim teaches this limitation or not. Clarification is required.

Regarding the requirement of MPEP§ 708.02(a)(I.)(I)(3) and item 6.3 above, the Petitioner should provide a detailed explanation of how each of the claims is patentable over the references cited with particularity required by 37 CFR 1.111(b) and (c). The Petitioner does not address the limitation reciting, *outputting to a user the ordered code subsets* in terms of patentability. Therefore, it is not clear if this feature is taught by the cited references, known in the art, or considered to be a patentable feature. Clarification is required.

Thus, the petition does not meet the conditions II.5.1, II.5.2, II.6.2 and II.6.3 above.

DECISION

For the above-stated reasons, the petition is **dismissed**. The application will therefore be taken up by the examiner for action in its regular turn.

Petitioner is given a single opportunity to perfect the petition. Any request for reconsideration of this decision must be submitted within 1 (one) month or 30 (thirty) days, whichever is longer, (no extension of time under 37 CFR 1.136(a)) from the date of this decision in order to be considered timely. Any request for reconsideration must address the deficiencies indicated above.

Petitioner is reminded that, upon granting of the special status of the application on request for reconsideration, the application will be processed expeditiously. However, due to the dismissal of the instant petition, examination may not be completed within twelve months of the filing date of the application.

Any inquiry regarding this decision should be directed to the undersigned at (571) 272-3591.

_____/Gail Hayes_____
Gail Hayes, Quality Assurance Specialist
Technology Center 2100

UNITED STATES PATENT AND TRADEMARK OFFICE

UNITED STATES DEPARTMENT OF COMMERCE
United States Patent and Trademark Office
Address: COMMISSIONER FOR PATENTS
P.O. Box 1450
Alexandria, Virginia 22313-1450
www.uspto.gov

APPLICATION NO.	FILING DATE	FIRST NAMED INVENTOR	ATTORNEY DOCKET NO.	CONFIRMATION NO.
12/186,277	08/05/2008	Shachar Fienblit	IL920080103US1 (105128)	1886

78148 7590 06/03/2009
KING & SPALDING
1180 PEACHTREE ST.
ATLANTA, GA 30309

EXAMINER
BULLOCK JR, LEWIS ALEXANDER

ART UNIT	PAPER NUMBER
2193	

MAIL DATE	DELIVERY MODE
06/03/2009	PAPER

Please find below and/or attached an Office communication concerning this application or proceeding.

The time period for reply, if any, is set in the attached communication.

UNITED STATES PATENT AND TRADEMARK OFFICE

Commissioner for Patents
United States Patent and Trademark Office
P.O. Box 1450
Alexandria, VA 22313-1450
www.uspto.gov

KING & SPALDING
1180 PEACHTREE ST.
ATLANTA GA 30309

In re Application of: Fienblit, Shachar et al. Serial No.: 12/186,277 Filed: August 05, 2008 Docket: IL920080103US1 (105128) Title: CONCERN BASED HOLE ANALYSIS	DECISION ON PETITION TO MAKE SPECIAL FOR NEW APPLICATION UNDER 37 C.F.R. § 1.102 & M.P.E.P. § 708.02

This is a decision on the revised petition filed on April 17, 2009, to make the above-identified application special for accelerated examination procedure under 37 C.F.R. § 1.102(d).

The petition to make the application special is GRANTED.

The application is eligible for accelerated examination and the petition complies with the conditions for granting the application special status pursuant to the "Change to Practice for Petitions in Patent Applications to Make Special and for Accelerated Examination" published June 26, 2006, in the Federal Register. (71 Fed. Reg. 36323).

The prosecution of the instant application will be conducted expeditiously according to the following guidelines.

1. The application will be docketed to an examiner and taken up for action within two weeks of the date of this decision.

2. Restriction Practice:
   If the examiner determines that the claims are not directed to a single invention, a telephone request to elect one single invention will be made pursuant to MPEP 812.01. As a prerequisite to the grant of this petition, the applicant has agreed to make an oral election, by telephone, without traverse. If the applicant refuses to make an election without traverse, or the examiner cannot reach the applicant after a reasonable effort, the examiner will treat the first claimed invention (invention defined by claim 1) as having being constructively elected without traverse for examination.

3. Office action:

If it is determined that, after appropriate consultation, there is a potential rejection or any other issue to be addressed, the examiner will telephone the applicant and arrange an interview to discuss and resolve the issue. An Office action, other than a Notice of Allowance and Fee(s) Due (Notice of Allowance), will not be issued unless either: 1) an interview was conducted but did not result in agreed to action that places the application in condition for allowance, or, 2) a determination is made that an interview would be unlikely to result in the application being placed in condition for allowance, and 3) an internal conference has been held to review any rejection of any claim.

4. Time for Reply:
An Office action other than a Notice of Allowance or a final Office action will set a shortened statutory period of one month or thirty days, whichever is longer, for reply with no extension of time available under 37 CFR 1.136(a). Failure to timely file a reply within this non-extendible period for reply will result in the abandonment of the application.

5. Reply by Applicant:
A timely reply to an Office action other than the Notice of Allowance must be submitted electronically via EFS or EFS-web and limited to addressing the rejections, objections and requirement made. Any amendment that attempts to: 1) add claims which would result in more than three pending independent claims or more than twenty pending total claims; 2) present claims not encompassed by the pre-examination search or an updated accelerated examination support document; or 3) present claims that are directed a non-elected invention or an invention other than that previously claimed and examined in the application, will be treated as not fully responsive and will not be entered.

   For any amendment to the claims (including any new claim) that is not encompassed by the accelerated examination support document, applicant must provide an updated accelerated examination support document that encompasses the amended or new claims at the time of filing of the amendment.

   To proceed expeditiously with the examination, it is recommended that a reply with amendments made to any claim or with any new claim being added be accompanied by an updated accelerated examination support document or a statement explaining how the amended or new claim is supported by the original accelerated examination support document.

6. Information Disclosure Statement (IDS):
Any IDS filed during prosecution must be submitted electronically via EFS or EFS-web, accompanied by an updated accelerated examination support document, and be in compliance with 37 CFR 1.97 and 1.98.

7. Post-Allowance Processing:
   To expedite processing of the allowed application into a patent, the applicant must: 1) pay the required fees within one month of the date of the Notice of Allowance, and 2) not file any post allowance papers not required by the Office. In no event may the issue fee be paid and accepted later than three months from the date of the Notice of Allowance.

8. After-Final and Appeal Procedures:
   To expedite prosecution, after receiving the final Office action, applicant must: 1) promptly file a notice of appeal, an appeal brief and appeal fees; and 2) not request a pre-appeal brief conference.

   Any amendment, affidavit or other evidence filed after final Office action must comply with applicable rules and the requirements outlined in numbered paragraphs 5 and 6 above.

   On appeal, the application will proceed according to normal appeal procedures. After appeal, the application will again be treated special.

9. Proceedings Outside the Normal Examination Process:
   If the application becomes involved in a proceeding that is outside the normal examination process (e.g., a secrecy order, national security review, interference proceeding, petitions under 37 CFR 1.181, 182 or 183), the application will be treated special before and after such proceeding.

10. Final Disposition:
    The twelve month goal of this accelerated examination procedure ends with a final disposition. The mailing of a final Office action, a Notice of Allowance, the filing of a Notice of Appeal, or the filing of a Request for Continued Examination (RCE) is the final disposition.

If, during prosecution, a paper is not filed electronically using EFS-web, a reply is filed but is not fully responsive, the application is involved in an appeal, or a proceeding outside normal examination process, the application will still be examined expeditiously, however, the final disposition may occur more than twelve months from the filing of the application.

Any inquiry regarding this decision should be directed to the undersigned at (571) 272-3591.

_____/Gail Hayes/_____
Gail Hayes, Quality Assurance Specialist
Technology Center 2100

PTO/SB/130 (09-08)
Approved for use through 10/31/2008. OMB 0651- 0031
U.S. Patent and Trademark Office; U.S. DEPARTMENT OF COMMERCE
Under the Paperwork Reduction Act of 1995, no persons are required to respond to a collection of information unless it contains a valid OMB control number

PETITION TO MAKE SPECIAL BASED ON AGE FOR ADVANCEMENT OF EXAMINATION UNDER 37 CFR 1.102(c)(1)

Application Information

Application Number	12/186,296	Confirmation Number	1926	Filing Date	2008-08-05
Attorney Docket Number (optional)	481303	Art Unit	3671	Examiner	
First Named Inventor	Vern Godfrey				
Title of Invention	Riding Mower				

Attention: Office of Petitions

An application may be made special for advancement of examination upon filing of a petition showing that the applicant is 65 years of age, or more. No fee is required with such a petition. See 37 CFR 1.102(c)(1) and MPEP 708.02 (IV).

APPLICANT HEREBY PETITIONS TO MAKE SPECIAL FOR ADVANCEMENT OF EXAMINATION IN THIS APPLICATION UNDER 37 CFR 1.102(c)(1) and MPEP 708.02 (IV) ON THE BASIS OF THE APPLICANT'S AGE.

A grantable petition requires one of the following items:
(1) Statement by one named inventor in the application that he/she is 65 years of age, or more; or
(2) Certification by a registered attorney/agent having evidence such as a birth certificate, passport, driver's license, etc. showing one named inventor in the application is 65 years of age, or more.

Name of Inventor who is 65 years of age, or older

Given Name	Middle Name	Family Name	Suffix
Vern		Godfrey	

A signature of the applicant or representative is required in accordance with 37 CFR 1.33 and 10.18.
Please see 37 CFR 1.4(d) for the format of the signature.

Select (1) or (2) :

○ (1) I am an inventor in this application and I am 65 years of age, or more.

◉ (2) I am an attorney or agent registered to practice before the Patent and Trademark Office, and I certify that I am in possession of evidence, and will retain such in the application file record, showing that the inventor listed above is 65 years of age, or more.

Signature	/Marshall S. Honeyman/	Date (YYYY-MM-DD)	2008-10-21
Name	Marshall S. Honeyman	Registration Number	48114

PTO/SB/130 (09-08)
Approved for use through 10/31/2008. OMB 0651- 0031
U.S. Patent and Trademark Office; U.S. DEPARTMENT OF COMMERCE
Under the Paperwork Reduction Act of 1995, no persons are required to respond to a collection of information unless it contains a valid OMB control number

Privacy Act Statement

The Privacy Act of 1974 (P.L. 93-579) requires that you be given certain information in connection with your submission of the attached form related to a patent application or patent. Accordingly, pursuant to the requirements of the Act, please be advised that: (1) the general authority for the collection of this information is 35 U.S.C. 2(b)(2); (2) furnishing of the information solicited is voluntary; and (3) the principal purpose for which the information is used by the U.S. Patent and Trademark Office is to process and/or examine your submission related to a patent application or patent. If you do not furnish the requested information, the U.S. Patent and Trademark Office may not be able to process and/or examine your submission, which may result in termination of proceedings or abandonment of the application or expiration of the patent.

The information provided by you in this form will be subject to the following routine uses:

1. The information on this form will be treated confidentially to the extent allowed under the Freedom of Information Act (5 U.S.C. 552) and the Privacy Act (5 U.S.C. 552a). Records from this system of records may be disclosed to the Department of Justice to determine whether the Fr eedom of Information Act requires disclosure of these records.

2. A record from this system of records may be disclosed, as a routine use, in the course of presenting evidence to a court, magistrate, or administrative tribunal, including disclosures to opposing counsel in the course of settlement negotiations.

3. A record in this system of records may be disclosed, as a routine use, to a Member of Congress submitting a request involving an individual, to whom the record pertains, when the individual has requested assistance from the Member with respect to the subject matter of the record.

4. A record in this system of records may be disclosed, as a routine use, to a contractor of the Agency having need for the information in order to perform a contract. Recipients of information shall be required to comply with the requirements of the Privacy Act of 1974, as amended, pursuant to 5 U.S.C. 552a(m).

5. A record related to an International Application filed under the Patent Cooperation Treaty in this system of records may be disclosed, as a routine use, to the International Bureau of the World Intellectual Property Organization, pursuant to the Patent Cooperation Treaty.

6. A record in this system of records may be disclosed, as a routine use, to another federal agency for purposes of National Security review (35 U.S.C. 181) and for review pursuant to the Atomic Energy Act (42 U.S.C. 218(c)).

7. A record from this system of records may be disclosed, as a routine use, to the Administrator, General Services, or his/her designee, during an inspection of records conducted by GSA as part of that agency's responsibility to recommend improvements in records management practices and programs, under authority of 44 U.S.C. 2904 and 2906. Such disclosure shall be made in accordance with the GSA regulations governing inspection of records for this purpose, and any other relevant (i.e., GSA or Commerce) directive. Such disclosure shall not be used to make determinations about indivi duals.

8. A record from this system of records may be disclosed, as a routine use, to the public after either publication of the application pursuant to 35 U.S.C. 122(b) or issuance of a patent pursuant to 35 U.S.C. 151. Further, a record may be disclosed, subject to the limitations of 37 CFR 1.14, as a routine use, to the public if the record was filed in an application which became abandoned or in which the proceedings were terminated and which application is referenced by either a published application, an application open to public inspections or an issued patent.

9. A record from this system of records may be disclosed, as a routine use, to a Federal, State, or local law enforcement agency, if the USPTO becomes aware of a violation or potential violation of law or regulation.

UNITED STATES PATENT AND TRADEMARK OFFICE

Commissioner for Patents
United States Patent and Trademark Office
P.O. Box 1450
Alexandria, VA 22313-1450
www.uspto.gov

In re Application of
Vern Godfrey

Application No. 12186296

Filed: August 5,2008

Attorney Docket No. 481303

:DECISION ON PETITION TO MAKE SPECIAL
:UNDER 37 CFR 1.102(c)(1)

This is a decision on the electronic petition under 37 CFR 1.102 (c)(1), filed 21-OCT-2008 to make the above-identified application special based on applicant's age as set forth in MPEP § 708.02, Section IV.

The petition is **GRANTED**.

A grantable petition to make an application special under 37 CFR 1.102(c)(1), MPEP § 708.02, Section IV: Applicant's Age must include a statement by applicant or a registered practitioner having evidence that applicant is at least 65 years of age. No fee is required.

Accordingly, the above-identified application has been accorded "special" status and will be taken up for action by the examiner upon the completion of all pre-examination processing.

Telephone inquiries concerning this electronic decision should be directed to the Electronic Business Center at 866-217-9197.

All other inquiries concerning either the examination or status of the application should be directed to the Technology Center.

UNITED STATES PATENT AND TRADEMARK OFFICE

Commissioner for Patents
United States Patent and Trademark Office
P.O. Box 1450
Alexandria, VA 22313-1450
www.uspto.gov

Thompson Hine LLP
2000 Courthouse Plaza N.E.
10 W. Second Street
Dayton, OH 45402-1758

COPY MAILED

MAY 06 2009

OFFICE OF PETITIONS

In re Application of :
Hofmann et al. :
Application No. 12/186,309 :
Filed: August 5, 2008 :
Attorney Docket No. 006593-02210 :
For: Oven With Wireless Temperature :
Sensor :

Decision Refusing to Accord
Status Under 37 CFR 1.47(a)

This is a decision on the petition under 37 CFR 1.47(a) filed February 13, 2009.

The petition is **DISMISSED**.

Any request for reconsideration of this decision must be submitted within TWO (2) MONTHS from the mail date of this decision. Extensions of time under 37 CFR 1.136(a) are permitted. No further petition fee is required for the request. Any response should be entitled "Request for Reconsideration of Petition Under 37 CFR 1.47(a)" and may include an oath or declaration executed by the current non-signing inventor(s). **Failure to respond will result in abandonment of the application.**

A grantable petition under 37 CFR 1.47(a) requires

(1) proof that the non-signing inventor cannot be found or reached after diligent effort or that the inventor refused to sign the declaration after having been presented with the application papers (specification, claims, and drawings),
(2) a proper oath or declaration executed by the available joint inventor(s),
(3) the fee of $200 as specified in 37 CFR 1.17(g), and
(4) the last known address of the non-signing inventor(s).

The instant petition fails to satisfy item (1) above.

Inventor Yang was a visiting student at the University of Dayton during the winter semester of 2007. The declaration of Phil Doepker indicates, on an unspecified date prior to August 5, 2008, inventor Yang returned to China. The declaration also states,

> Subsequent to August 5, 2008, faculty and staff of the University of Dayton previously acquainted with Qian Yang were contacted to determine whether there was a way to communication with Qian Yang, but no contact information was found.

The petition fails to indicate whether or not Phil Doepker, or another individual, contacted faculty and staff to locate an address for inventor Yang. If another individual contacted faculty and staff, a statement by the other individual should be provided.

The petition fails to indicate which faculty members and staff were contacted. Any request for reconsideration should identify all individuals contacted concerning the matter.

The petition fails to address whether a search of student records, specifically the record for Qian Yang, has been conducted. For example, if it was retained, her application to study for a semester at the University may have included a home address in China which might be her current address or the address of relatives who may know her current address. Student records also may explicitly include a new address for Qiang. For example, if she left prior to receiving her grades for the semester, she may have left an address for the University to use when mailing her grades. Absent a showing that having her student record reviewed for an address would place an undue burden on petitioner, a review of her student record should be performed.

Unless filed by EFS Web, further correspondence with respect to this matter should be addressed as follows:

By mail: Mail Stop Petition
Commissioner for Patents
P.O. Box 1450
Alexandria, VA 22313-1450

By facsimile: (571) 273-8300
Attn: Office of Petitions

By hand: U.S. Patent and Trademark Office
Customer Service Window
Randolph Building
401 Dulany Street
Alexandria, VA 22314

Telephone inquiries regarding this communication should be directed to Petitions Attorney Steven Brantley at (571) 272-3203.

Charles Steven Brantley
Senior Petitions Attorney
Office of Petitions

UNITED STATES PATENT AND TRADEMARK OFFICE

Commissioner for Patents
United States Patent and Trademark Office
P.O. Box 1450
Alexandria, VA 22313-1450
www.uspto.gov

Thompson Hine LLP
2000 Courthouse Plaza N.E.
10 W. Second Street
Dayton, OH 45402-1758

COPY MAILED

JUN 16 2009

OFFICE OF PETITIONS

In re Application of :
Hofmann et al. :
Application No. 12/186,309 :
Filed: August 5, 2008 :
Attorney Docket No. 006593-02210 :
For: Oven With Wireless Temperature :
Sensor :

Decision Noting Joinder of Inventor and Decision Dismissing Any Request for Status Under 37 CFR 1.47 as Moot

This is a decision in response to the renewed petition under 37 CFR 1.47(a) filed May 22, 2009.

The petition is accompanied by a Declaration signed by the previously non-signing inventor in compliance with 37 CFR 1.63. In view of the joinder of the inventor, further consideration under Rule 1.47(a) is unnecessary.

Therefore, the petition is **dismissed as moot**.

Technology Center Art Unit 3742 will be informed of the instant decision in order to ensure the Technology Center is aware the application is in condition to be docketed to an examiner and examined in due course.

Telephone inquiries regarding this communication should be directed to Petitions Attorney Steven Brantley at (571) 272-3203.

Charles Steven Brantley
Senior Petitions Attorney
Office of Petitions

UNITED STATES PATENT AND TRADEMARK OFFICE

Commissioner for Patents
United States Patent and Trademark Office
P.O. Box 1450
Alexandria, VA 22313-1450
www.uspto.gov

KRAMER LEVIN NAFTALIS
& FRANKEL LLP
1177 AVENUE OF THE AMERICAS
NEW YORK NY 10036

COPY MAILED

JUN 16 2009

OFFICE OF PETITIONS

In re Application of :
Mucignat, et al. :
Application No. 12/186,313 : DECISION
Filed/Deposited: 5 August, 2008 :
Attorney Docket No. P6741US1 :

This is a decision on the petition filed on 29 April, 2009, to revive under 37 C.F.R. §1.137(b) and alleging abandonment due to unintentional delay.

> ***It is not apparent whether the person signing the statement of unintentional delay was in a position to have firsthand or direct knowledge of the facts and circumstances of the delay at issue.***
>
> ***Nevertheless, such statement is being treated as having been made as the result of a reasonable inquiry into the facts and circumstances of such delay.[1] In the event that such an inquiry has not been made, Petitioner <u>must</u> make such an inquiry.***
>
> ***If such inquiry results in the discovery that it is not correct that the entire delay in filing the required reply from the due date for the reply until the filing of a grantable petition pursuant to 37 C.F.R. §1.137(b) was unintentional, Petitioner <u>must</u> notify the Office.***

The petition as considered under 37 C.F.R. §1.137(b) is **<u>GRANTED</u>**.

<u>As to Allegations of Unintentional Delay</u>

The requirements of a grantable petition pursuant to 37 C.F.R. §1.137(b) are the petition and fee therefor, a reply, a proper statement of unintentional delay under the regulation, and, where

[1] <u>See</u> 37 C.F.R. §10.18(b) <u>and</u> <u>Changes to Patent Practice and Procedure</u>; Final Rule Notice, 62 <u>Fed. Reg.</u> 53131, 53178 (October 10, 1997), 1203 <u>Off. Gaz. Pat. Office</u> 63, 103 (October 21, 1997).

applicable, a terminal disclaimer and fee. (However, it does not appear that a terminal disclaimer and fee are due here.)

Petitioners attentions always are directed to the Commentary at MPEP §711.03(c) for guidance as to satisfying the requirements for relief under 37 C.F.R. §1.137.

BACKGROUND

The record reflects as follows:

Petitioner failed to reply timely and properly to the Notice to File Corrected Application Papers (replacement drawings) mailed on 18 August, 2008, with reply due absent extension of time on or before 18 October, 2008.

The application went abandoned by operation of law after midnight 18 October, 2008.

On 6 November, 2008, Petitioner filed a Revocation/Power of Attorney and accompanying certificate pursuant to 37 C.F.R. §3.73(b).

On 17 November, 2008, the Office acknowledged and appears to have accepted the Revocation/Power of Attorney.

The Office mailed the Notice of Abandonment on 24 April, 2009.

On 29 April, 2009, Petitioner filed, *inter alia*, a petition pursuant to 37 C.F.R. §1.137(b), with fee, with a statement and an explanation of the unintentional delay and a reply was in the form of replacement drawings—so satisfying the regulatory requirements consistent with the guidance in the Commentary at MPEP §711.03(c). (Petitioner filed a request/fee for extension of time, which is unnecessary in light of the petition, and is refunded via Deposit Account 50-0540. Should Petitioner later note that the fee has not been refunded, Petitioner should file a request to the Office of Finance with a copy of this decision.

As indicated above, it is not apparent whether the person signing the statement of unintentional delay was in a position to have firsthand or direct knowledge of the facts and circumstances of the delay at issue.

Nevertheless, such statement is being treated as having been made as the result of a reasonable inquiry into the facts and circumstances of such delay.[2] *In the event that such an inquiry has not been made, Petitioner* ***must*** *make such an inquiry.*

---

[2] See 37 C.F.R. §10.18(b) and Changes to Patent Practice and Procedure; Final Rule Notice, 62 Fed. Reg. 53131, 53178 (October 10, 1997), 1203 Off. Gaz. Pat. Office 63, 103 (October 21, 1997).

If such inquiry results in the discovery that it is not correct that the entire delay in filing the required reply from the due date for the reply until the filing of a grantable petition pursuant to 37 C.F.R. §1.137(b) was unintentional, Petitioner ***must*** *notify the Office.*

The availability of applications and application papers online to applicants/practitioners who diligently associate their Customer Number with the respective application(s) now provides an applicant/practitioner on-demand information as to events/transactions in an application.

Out of an abundance of caution, Petitioners always are reminded that those registered to practice and all others who make representations before the Office **must** inquire into the underlying facts of representations made to the Office and support averments with the appropriate documentation–since all owe to the Office the continuing duty to disclose.[3]

STATUTES, REGULATIONS AND ANALYSIS

Congress has authorized the Commissioner to "revive an application if the delay is shown to the satisfaction of the Commissioner to have been "unavoidable." 35 U.S.C. §133 (1994).[4]
The regulations at 37 C.F.R. §1.137(a) and (b) set forth the requirements for a Petitioner to revive a previously unavoidably or unintentionally, respectively, abandoned application under this congressional grant of authority.

Unintentional delays are those that do not satisfy the very strict statutory and regulatory requirements of unavoidable delay, and also, by definition, are not intentional.[5]))

As to Allegations of Unintentional Delay

The requirements of a grantable petition pursuant to 37 C.F.R. §1.137(b) are the petition and fee therefor, a reply, a proper statement of unintentional delay under the regulation, and, where applicable, a terminal disclaimer and fee. (However, it does not appear that a terminal disclaimer and fee are due here.)

---

[3] See supplement of 17 June, 1999. The Patent and Trademark Office is relying on petitioner's duty of candor and good faith and accepting a statement made by Petitioner. See Changes to Patent Practice and Procedure, 62 Fed. Reg. at 53160 and 53178, 1203 Off. Gaz. Pat. Office at 88 and 103 (responses to comments 64 and 109)(applicant obligated under 37 C.F.R. §10.18 to inquire into the underlying facts and circumstances when providing statements to the Patent and Trademark Office).

[4] 35 U.S.C. §133 provides:

35 U.S.C. §133 Time for prosecuting application.
Upon failure of the applicant to prosecute the application within six months after any action therein, of which notice has been given or mailed to the applicant, or within such shorter time, not less than thirty days, as fixed by the Commissioner in such action, the application shall be regarded as abandoned by the parties thereto, unless it be shown to the satisfaction of the Commissioner that such delay was unavoidable.

[5] Therefore, by example, an unintentional delay in the reply might occur if the reply and transmittal form are to be prepared for shipment by the US Postal Service, but other pressing matters distract one's attention and the mail is not timely deposited for shipment.

It appears that the requirements under 37 C.F.R. §1.137(b) have been satisfied.

CONCLUSION

Accordingly, the petition under 37 C.F.R. §1.137(b) is **granted**.

The instant application is released to the Office of Patent Application Processing (OPAP) for further processing in due course.

Petitioner may find it beneficial to view Private PAIR within a fortnight of the instant decision to ensure that the revival has been acknowledged by the OPAP in response to this decision. It is noted that all inquiries with regard to that change in status need be directed to the OPAP where that change of status must be effected—that does not occur in the Office of Petitions.

Telephone inquiries regarding this decision may be directed to the undersigned at (571) 272-3214—it is noted, however, that all practice before the Office is in writing (see: 37 C.F.R. §1.2[6]) and the proper authority for action on any matter in this regard are the statutes (35 U.S.C.), regulations (37 C.F.R.) and the commentary on policy (MPEP). Therefore, no telephone discussion may be controlling or considered authority for Petitioner's action(s).

/John J. Gillon, Jr./
John J. Gillon, Jr.
Senior Attorney
Office of Petitions

[6] The regulations at 37 C.F.R. §1.2 provide:
§1.2 Business to be transacted in writing.
All business with the Patent and Trademark Office should be transacted in writing. The personal attendance of applicants or their attorneys or agents at the Patent and Trademark Office is unnecessary. The action of the Patent and Trademark Office will be based exclusively on the written record in the Office. No attention will be paid to any alleged oral promise, stipulation, or understanding in relation to which there is disagreement or doubt.

UNITED STATES PATENT AND TRADEMARK OFFICE

Commissioner for Patents
United States Patent and Trademark Office
P.O. Box 1450
Alexandria, VA 22313-1450
www.uspto.gov

MERCHANT & GOULD, PC
P.O. BOX 2903
MINNEAPOLIS, MN 55402-0903

COPY MAILED

AUG 1 7 2009

OFFICE OF PETITIONS

In re Application of :
Paul C. HUNT :
Application No. 12/186,327 : DECISION ON PETITION
Filed: August 5, 2008 :
Attorney Docket No. 11838.0010USC6 :

This is a decision on the petition under the unintentional provisions of 37 CFR 1.137(b), filed June 24, 2009, to revive the above-identified application.

The petition is **GRANTED**.

The application became abandoned for failure to reply in a timely manner to the Notice to File Missing Parts of Nonprovisional Application (Notice), mailed August 18, 2008. The Notice set a period for reply of two (2) months from the mail date of the Notice. No extensions of time under the provisions of 37 CFR 1.136(a) were obtained. Accordingly, the application became abandoned on October 19, 2008.

The petition satisfies the requirements of 37 CFR 1.137(b) in that petitioner has supplied (1) the reply in the form of the required fees and replacement drawings; (2) the petition fee of $1620; and (3) an adequate statement of unintentional delay.

37 CFR 1.137(b)(3) requires a statement that "the entire delay in filing the required reply from the due date for the reply until the filing of a grantable petition pursuant to 37 CFR 1.137(b) was unintentional." Since the statement appearing in the petition varies from the language required by 37 CFR 1.137(b)(3), the statement is being construed as the required statement. Petitioner must notify the Office if this is **not** a correct reading of the statement appearing in the petition.

There is no indication that the person signing the petition was ever given a power of attorney to prosecute the application. If the person signing the petition desires to receive future correspondence regarding this application, the appropriate power of attorney document must be submitted.

The power of attorney filed August 5, 2008, is not accepted for the reason set forth in the correspondence mailed August 18, 2008.

Telephone inquiries concerning this decision should be directed to Diane Goodwyn at (571)272-6735.

This application is being referred back to the Office of Data Management for further processing.

Thurman K. Page
Petitions Examiner
Office of Petitions

UNITED STATES PATENT AND TRADEMARK OFFICE

Commissioner for Patents
United States Patent and Trademark Office
P.O. Box 1450
Alexandria, VA 22313-1450
www.uspto.gov

HARSHAW RESEARCH, INC.
210 W. TECUMSEH STREET
OTTAWA KS 66067

COPY MAILED

OCT 1 4 2008

OFFICE OF PETITIONS

In re Application of	:	DECISION
Lisa Ousley	:	ON PETITION
Application No. 12/186349	:	
Filing or 371(c) Date: 08/05/2008	:	
Title of Invention: 80103	:	

This is a decision on the "Petition Under 37 CFR 1.17(F) for Date of Deposit," filed August 27, 2008, requesting the above-identified application be accorded a filing date of August 5, 2008, including drawing Figure 5. The petition is properly treated under 37 CFR 1.182.

The petition is granted.

Background

Application papers were filed in the above-identified application on August 5, 2008. On August 25, 2008, the Office of Patent Application Processing mailed a Notice of Omitted Item(s) in a Nonprovisional Application (hereinafter "Notice"), informing Applicant that the application had been accorded a filing date; however, Figure 5 described in the specification appeared to have been omitted from the application.

The present petition

Applicant files the present petition and asserts that Figure 5 was in fact deposited with the application papers filed on August 5, 2008. In support of this assertion, Applicant files a copy of his Acknowledgment Receipt[1]. A review of the copy of the Acknowledgment Receipt reveals that it acknowledges receipt by this Office of five (5) pages of drawings on August 5, 2008.

[1] An acknowledgment receipt is a legal equivalent of a post card receipt described in the Manual of Patent Examining Procedure (MPEP), Section 503. See, 1315 OG 57; 72 Fed. Reg. 2770 (23 Jan 2007).

Office records

A review of Office records reveals that this Office received drawing Figure 5 on August 5, 2008.

Conclusion

In view of the foregoing, the petition is granted.

A refund of the petition fees has been scheduled via Treasury Check.

The application will be returned to the Office of Patent Application Processing for further processing with a filing date of August 5, 2008, and an indication that Figure 5 described in the specification was included with the application papers filed on August 5, 2008.

Telephone inquiries concerning this decision should be directed to the undersigned at (571) 272-3232.

/Derek L. Woods/
Derek L. Woods
Attorney
Office of Petitions

UNITED STATES PATENT AND TRADEMARK OFFICE

Commissioner for Patents
United States Patent and Trademark Office
P.O. Box 1450
Alexandria, VA 22313-1450
www.uspto.gov

LEYDIG, VOIT & MAYER LTD.
TWO PRUDENTIAL PLAZA - SUITE 4900
180 NORTH STETSON AVENUE
CHICAGO, IL 60601-6731

MAILED

MAR 23 2010

OFFICE OF PETITIONS

Applicant: Chevrier, et al.
Appl. No.: 12/186,404
Filing Date: August 5, 2008
Title: METHOD AND COMPOSITIONS FOR USE IN TREATMENT OF PATIENTS WITH AUTOANTIBODY POSITIVE DISEASE
Pub. No.: US 2009/0081213 A1
Pub. Date: March 26, 2009

This is a decision on the request for a corrected patent application publication under 37 CFR 1.221(b) or (a), received on May 26, 2009, for the above-identified application.

Applicant requests that the application be republished because the patent application publication contains several material errors in the specification and the claims.

The request is DISMISSED..

37 CFR 1.221 (b) is applicable "only when the Office makes a material mistake which is apparent from Office records.... Any request for a corrected publication or revised patent application publication other than provided as provided in paragraph (a) of this section must be filed within two months from the date of the patent application publication. This period is not extendable." A material mistake must affect the public's ability to appreciate the technical disclosure of the patent application publication, to determine the scope of the patent application publication, or to determine the scope of the provisional rights that an applicant may seek to enforce upon issuance of a patent. [1]

The errors in the specification of the publication may be Office errors, but they are not material Office errors under 37 CFR 1.221. The errors are due to the quality and size of the text, which makes it difficult to electronically reproduce by digital imaging and optical character recognition. See 37 CFR 1.52(a)(1)(v), which states that all papers that are to become a permanent part of Office records must be presented "in a form having sufficient clarity and contrast between the paper and the writing to permit . . . electronic capture by use of digital imaging and optical character recognition." As set forth at MPEP 1121, "applications with poor

[1] Changes to Implement Eighteen-Month Publication of Patent Applications, 65 FR 57023, 57038 (Sept. 20, 2000), 1239, Off. Gaz. Pat. Office Notices 63, 75 (Oct. 10, 2000) (final rule).

quality text, which may be acceptable for scanning and examination purposes, may lead to errors in the patent application publication.

Applicant is advised that he may want to file application papers that are clearer, as the error is due to the quality of the text. The text is very small, which makes it difficult to read and to electronically reproduce by digital imaging and optical character recognition. Applicants have been advised to file applications having cleaner and larger text with sufficient clarity and contrast to permit reproduction, such as electronic reproduction by digital imaging and optical character recognition, which will avoid errors in the patent application publication process. See 37 CFR 1.52.

The applicant is advised that a "request for republication of an application previously published" may be filed under 37 CFR 1.221 (a). Such a request for republication "must include a copy of the application compliance with the Office's electronic filing system requirements and be accompanied by the publication fee set forth in § 1.18 (d) and the processing fee set forth in § 1.17 (i)." If the request for republication does not comply with the electronic filing system requirements, the republication will not take place and the publication fee set forth in § 1.18 (d) will be refunded. The processing fee will be retained.

A guide for filing a request for a Pre-Grant Publication, such as a request for republication, may be found on the link below:

http://www.uspto.gov/ebc/portal/tutorials.htm

Any request for republication under 37 CFR 1.221(a), must be submitted via the EFS system, as a "Pre-Grant Publication" and questions or request for reconsideration of the decision, should be addressed as follows:

By mail to: Mail Stop PGPUB
Commissioner for Patents
P.O. Box 1450
Alexandria, Va. 22313-1450

By facsimile: 571-273-8300

Inquiries relating to this matter may be directed to Mark Polutta at (571) 272-7709.

Mark Polutta
Senior Legal Advisor
Office of Patent Legal Administration
Office of the Deputy Commissioner
for Patent Examination Policy

UNITED STATES PATENT AND TRADEMARK OFFICE

Commissioner for Patents
United States Patent and Trademark Office
P.O. Box 1450
Alexandria, VA 22313-1450
www.uspto.gov

Leydig, Voit & Mayer Ltd.
Two Prudential Plaza - Suite 4900
180 North Stetson Avenue
Chicago IL 60601-6731

MAILED

MAY 04 2010

OFFICE OF PETITIONS

In re Application of
Chevrier et al.
Application No. 12/186,404
Filed: August 5, 2008
Attorney Docket No. 703392

DECISION ON PETITION
UNDER 37 CFR 1.78(a)(6)

This is a decision on the petition under 37 CFR 1.78(a)(6), filed February 9, 2010, to accept an unintentionally delayed claim under 35 U.S.C. §119(e) for the benefit of the prior-filed provisional applications set forth in the concurrently filed supplemental Application Data Sheet and preliminary amendment.

The petition is **GRANTED.**

A petition under 37 CFR 1.78(a)(6) is only applicable to those applications filed on or after November 29, 2000. Further, the petition is appropriate only after expiration of the period specified in 37 CFR 1.78(a)(5)(ii) and must be filed during the pendency of the nonprovisional application. In addition, the petition must be accompanied by:

(1) the reference required by 35 U.S.C. § 119(e) and 37 CFR 1.78(a)(5)(i) to the prior-filed application, unless previously submitted;
(2) the surcharge set forth in § 1.17(t); and
(3) a statement that the entire delay between the date the claim was due under 37 CFR 1.78(a)(5)(ii) and the date the claim was filed was unintentional. The Director may require additional information where there is a question whether the delay was unintentional.

Additionally, the instant nonprovisional application must be pending at the time of filing of the reference to the prior-filed provisional application as required by 37 CFR 1.78(a)(5)(ii). Further, a nonprovisional application claiming the benefit of the prior-filed provisional applications must have been filed within twelve months of the filing date of the prior-filed provisional applications.

All of the above requirements having been satisfied, the late claim for priority under 35 U.S.C. § 119(e) is accepted as being unintentionally delayed.

The granting of the petition to accept the delayed benefit claim to the prior-filed applications under 37 CFR 1.78(a)(6) should not be construed as meaning that this application is entitled to the benefit of the filing date of the prior-filed applications. In order for this application to be entitled to the benefit of the prior-filed applications, all other requirements under 35 U.S.C. §119(e) and 37 CFR 1.78(a)(4) and (a)(5) must be met. Similarly, the fact that the corrected Filing Receipt accompanying this decision on petition includes the prior-filed applications should not be construed as meaning that applicant is entitled to the claim for benefit of priority to the prior-filed applications noted thereon. Accordingly, the examiner will, in due course, consider this benefit claim and determine whether the application is entitled to the benefit of the earlier filing date.

A corrected Filing Receipt, which includes the priority claim to the prior-filed provisional applications, accompanies this decision on petition.

Any inquiries concerning this decision may be directed to the undersigned at (571) 272-3230. All other inquiries concerning either the examination procedures or status of the application should be directed to the Technology Center.

The application is being forwarded to Technology Center AU 1649 for consideration by the examiner of the claim under 35 U.S.C. §119(e) for the benefit of priority to the prior-filed provisional applications.

Shirene Willis Brantley
Senior Petitions Attorney
Office of Petitions

ATTACHMENT: Corrected Filing Receipt

UNITED STATES PATENT AND TRADEMARK OFFICE

UNITED STATES DEPARTMENT OF COMMERCE
United States Patent and Trademark Office
Address: COMMISSIONER FOR PATENTS
P.O. Box 1450
Alexandria, Virginia 22313-1450
www.uspto.gov

APPLICATION NUMBER	FILING or 371(c) DATE	GRP ART UNIT	FIL FEE REC'D	ATTY.DOCKET.NO	TOT CLAIMS	IND CLAIMS
12/186,404	08/05/2008	1649	1290	703392	20	3

CONFIRMATION NO. 1129

CORRECTED FILING RECEIPT

73326
Leydig, Voit & Mayer Ltd.
Two Prudential Plaza - Suite 4900
180 North Stetson Avenue
Chicago, IL 60601-6731

OC000000041354598

Date Mailed: 04/29/2010

Receipt is acknowledged of this non-provisional patent application. The application will be taken up for examination in due course. Applicant will be notified as to the results of the examination. Any correspondence concerning the application must include the following identification information: the U.S. APPLICATION NUMBER, FILING DATE, NAME OF APPLICANT, and TITLE OF INVENTION. Fees transmitted by check or draft are subject to collection. Please verify the accuracy of the data presented on this receipt. **If an error is noted on this Filing Receipt, please submit a written request for a Filing Receipt Correction. Please provide a copy of this Filing Receipt with the changes noted thereon. If you received a "Notice to File Missing Parts" for this application, please submit any corrections to this Filing Receipt with your reply to the Notice. When the USPTO processes the reply to the Notice, the USPTO will generate another Filing Receipt incorporating the requested corrections**

Applicant(s)

MARC CHEVRIER, Severna Park, MD;
William W. Freimuth, Gaithersburg, MD;
Zhenshao Zhong, North Potomac, MD;
Daniel Odenheimer, Rockville, MD;
Melissa D. Perkins, Germantown, MD;

Assignment For Published Patent Application

Human Genome Sciences, Inc., Rockville, MD

Power of Attorney: The patent practitioners associated with Customer Number 73326

Domestic Priority data as claimed by applicant

This application is a DIV of 11/543,024 10/05/2006 ABN
which claims benefit of 60/725,625 10/13/2005
and claims benefit of 60/735,967 11/14/2005
and claims benefit of 60/776,664 02/27/2006
and claims benefit of 60/781,387 03/13/2006
and claims benefit of 60/787,557 03/31/2006
and claims benefit of 60/797,360 05/04/2006
and claims benefit of 60/814,870 06/20/2006
and claims benefit of 60/815,558 06/22/2006
and claims benefit of 60/815,827 06/23/2006
and claims benefit of 60/834,150 07/31/2006
and claims benefit of 60/725,626 10/13/2005
and claims benefit of 60/735,988 11/14/2005
and claims benefit of 60/776,665 02/27/2006
and claims benefit of 60/797,351 05/04/2006

and claims benefit of 60/814,869 06/20/2006
and claims benefit of 60/815,559 06/22/2006
and claims benefit of 60/834,152 07/31/2006
and claims benefit of 60/725,627 10/13/2005
and claims benefit of 60/735,964 11/14/2005
and claims benefit of 60/776,658 02/27/2006
and claims benefit of 60/725,629 10/13/2005
and claims benefit of 60/735,963 11/14/2005
and claims benefit of 60/776,660 02/27/2006
and claims benefit of 60/725,628 10/13/2005
and claims benefit of 60/735,987 11/14/2005
and claims benefit of 60/776,659 02/27/2006

Foreign Applications

If Required, Foreign Filing License Granted: 09/09/2008

The country code and number of your priority application, to be used for filing abroad under the Paris Convention, is **US 12/186,404**

Projected Publication Date: Not Applicable

Non-Publication Request: No

Early Publication Request: No
Title

METHODS AND COMPOSITIONS FOR USE IN TREATMENT OF PATIENTS WITH AUTOANTIBODY POSITIVE DISEASE

Preliminary Class

435

PROTECTING YOUR INVENTION OUTSIDE THE UNITED STATES

Since the rights granted by a U.S. patent extend only throughout the territory of the United States and have no effect in a foreign country, an inventor who wishes patent protection in another country must apply for a patent in a specific country or in regional patent offices. Applicants may wish to consider the filing of an international application under the Patent Cooperation Treaty (PCT). An international (PCT) application generally has the same effect as a regular national patent application in each PCT-member country. The PCT process **simplifies** the filing of patent applications on the same invention in member countries, but **does not result** in a grant of "an international patent" and does not eliminate the need of applicants to file additional documents and fees in countries where patent protection is desired.

Almost every country has its own patent law, and a person desiring a patent in a particular country must make an application for patent in that country in accordance with its particular laws. Since the laws of many countries differ in various respects from the patent law of the United States, applicants are advised to seek guidance from specific foreign countries to ensure that patent rights are not lost prematurely.

Applicants also are advised that in the case of inventions made in the United States, the Director of the USPTO must issue a license before applicants can apply for a patent in a foreign country. The filing of a U.S. patent application

serves as a request for a foreign filing license. The application's filing receipt contains further information and guidance as to the status of applicant's license for foreign filing.

Applicants may wish to consult the USPTO booklet, "General Information Concerning Patents" (specifically, the section entitled "Treaties and Foreign Patents") for more information on timeframes and deadlines for filing foreign patent applications. The guide is available either by contacting the USPTO Contact Center at 800-786-9199, or it can be viewed on the USPTO website at http://www.uspto.gov/web/offices/pac/doc/general/index.html.

For information on preventing theft of your intellectual property (patents, trademarks and copyrights), you may wish to consult the U.S. Government website, http://www.stopfakes.gov. Part of a Department of Commerce initiative, this website includes self-help "toolkits" giving innovators guidance on how to protect intellectual property in specific countries such as China, Korea and Mexico. For questions regarding patent enforcement issues, applicants may call the U.S. Government hotline at 1-866-999-HALT (1-866-999-4158).

LICENSE FOR FOREIGN FILING UNDER

Title 35, United States Code, Section 184

Title 37, Code of Federal Regulations, 5.11 & 5.15

GRANTED

The applicant has been granted a license under 35 U.S.C. 184, if the phrase "IF REQUIRED, FOREIGN FILING LICENSE GRANTED" followed by a date appears on this form. Such licenses are issued in all applications where the conditions for issuance of a license have been met, regardless of whether or not a license may be required as set forth in 37 CFR 5.15. The scope and limitations of this license are set forth in 37 CFR 5.15(a) unless an earlier license has been issued under 37 CFR 5.15(b). The license is subject to revocation upon written notification. The date indicated is the effective date of the license, unless an earlier license of similar scope has been granted under 37 CFR 5.13 or 5.14.

This license is to be retained by the licensee and may be used at any time on or after the effective date thereof unless it is revoked. This license is automatically transferred to any related applications(s) filed under 37 CFR 1.53(d). This license is not retroactive.

The grant of a license does not in any way lessen the responsibility of a licensee for the security of the subject matter as imposed by any Government contract or the provisions of existing laws relating to espionage and the national security or the export of technical data. Licensees should apprise themselves of current regulations especially with respect to certain countries, of other agencies, particularly the Office of Defense Trade Controls, Department of State (with respect to Arms, Munitions and Implements of War (22 CFR 121-128)); the Bureau of Industry and Security, Department of Commerce (15 CFR parts 730-774); the Office of Foreign AssetsControl, Department of Treasury (31 CFR Parts 500+) and the Department of Energy.

NOT GRANTED

No license under 35 U.S.C. 184 has been granted at this time, if the phrase "IF REQUIRED, FOREIGN FILING LICENSE GRANTED" DOES NOT appear on this form. Applicant may still petition for a license under 37 CFR 5.12, if a license is desired before the expiration of 6 months from the filing date of the application. If 6 months has lapsed from the filing date of this application and the licensee has not received any indication of a secrecy order under 35 U.S.C. 181, the licensee may foreign file the application pursuant to 37 CFR 5.15(b).

UNITED STATES PATENT AND TRADEMARK OFFICE

Commissioner for Patents
United States Patent and Trademark Office
P.O. Box 1450
Alexandria, VA 22313-1450
www.uspto.gov

Finnegan, Henderson, Farabow, Garrett & Dunner, LLP
901 New York Avenue, NW
Washington, DC 20001-4413

MAILED

AUG 3 1 2009

OFFICE OF PETITIONS

In re Application of	:	
David J. Pilling et al.	:	
Application No. 12/186,447	:	DECISION ON PETITION
Filed: August 5, 2008	:	TO WITHDRAW
Attorney Docket No. 9145.0060-00	:	FROM RECORD
	:	

This is a decision on the Request to Withdraw as attorney or agent of record under 37 C.F.R. § 1.36(b), filed July 17, 2009.

The request is **NOT APPROVED.**

A grantable request to withdraw as attorney/agent of record must be signed by every attorney/agent seeking to withdraw or contain a clear indication that one attorney is signing on behalf of another/others. The Office requires the practitioner(s) requesting withdrawal to certify that he, she, or they have: (1) given reasonable notice to the client, prior to the expiration of the response period, that the practitioner(s) intends to withdraw from employment; (2) delivered to the client or a duly authorized representative of the client all papers and property (including funds) to which the client is entitled; and (3) notified the client of any responses that may be due and the time frame within which the client must respond, pursuant 37 CFR 10.40(c).

The request cannot be approved because there is no indication that the acts noted in the above-identified certifications have been performed. Refer to Form No. PTO/SB/83 (Updated 4/2008).

All future communications from the Office will continue to be directed to the above-listed address until otherwise notified by applicant.

Telephone inquiries concerning this decision should be directed to the undersigned at 571-272-6735.

/Kimberly A. Inabinet/

Kimberly Inabinet
Petitions Examiner
Office of Petitions

cc: Haynes and Boone, LLP
18200 Von Karma
Suite 725
Irvine, CA 92612

UNITED STATES PATENT AND TRADEMARK OFFICE

COMMISSIONER FOR PATENTS
UNITED STATES PATENT AND TRADEMARK OFFICE
P.O. BOX 1450
ALEXANDRIA, VA 22313-1450
www.uspto.gov

Finnegan, Henderson, Farabow, Garrett & Dunner, LLP
901 New York Avenue, NW
Washington, DC 20001-4413

MAILED

OCT 26 2009

OFFICE OF PETITIONS

In re Application of	:	
David J. Pilling et al.	:	
Application No. 12/186,447	:	DECISION ON PETITION
Filed: August 5, 2008	:	TO WITHDRAW
Attorney Docket No. 9145.0060-00	:	FROM RECORD
	:	

This is a decision on the renewed Request to Withdraw as attorney or agent of record under 37 C.F.R. § 1.36(b), filed October 6, 2009.

The request is **NOT APPROVED.**

The Office will no longer accept address changes to a new practitioner or law firm filed with a Request, absent the filing of a power of attorney to the new representative. The Office will either change the correspondence address of record to the most current address information provided for the assignee of the entire interest who properly became of record under 37 CFR 3.71 or, if no assignee of the entire interest has properly been made of record under 37 CFR 3.71, the most current address information provided for the first named inventor.

Accordingly, the request to withdraw from record cannot be approved because the request to change the correspondence address does not include a proper power of attorney nor is the address that of: (1) the first named inventor; or (2) an assignee of the entire interest under 37 C.F.R 3.71.

All future communications from the Office will continue to be directed to the above-identified address until otherwise properly notified.

Telephone inquiries concerning this decision should be directed to the undersigned at 571-272-4618.

/Kimberly Inabinet/

Kimberly Inabinet
Petitions Examiner
Office of Petitions

cc: Haynes and Boone, LLP
IP Section
2323 Victory Avenue
Suite 700
Dallas, TX 75213

UNITED STATES PATENT AND TRADEMARK OFFICE

UNITED STATES DEPARTMENT OF COMMERCE
United States Patent and Trademark Office
Address: COMMISSIONER FOR PATENTS
P.O. Box 1450
Alexandria, Virginia 22313-1450
www.uspto.gov

APPLICATION NO.	FILING DATE	FIRST NAMED INVENTOR	ATTORNEY DOCKET NO.	CONFIRMATION NO.
12/186,462	08/05/2008	Kyoung-Doo Kang	61675/L550	1232

7590 07/03/2010
CHRISTIE, PARKER & HALE, LLP
PO BOX 7068
PASADENA, CA 91109-7068

EXAMINER
WON, BUMSUK

ART UNIT	PAPER NUMBER
2889	

MAIL DATE	DELIVERY MODE
07/03/2010	PAPER

DECISION GRANTING PETITION UNDER 37 CFR 1.138(d)

The declaration of express abandonment is recognized

This is in response to the petition under 37 CFR 1.138(d), requesting for a refund of any previously paid search fee and excess claims fee in the above-identified application.

The petition is granted.

The express abandonment is recognized. Any previously paid search fee and excess claims fee are hereby refunded.

Telephone inquiries should be directed to the Office of Data Management at (571) 272-4200.

Patent Publication Branch
Office of Data Management

Adjustment date: 07/26/2010 [illegible]
[illegible] 12186462
[illegible] 510.00 CR
[illegible] 150.00 CR

FORM PET651G (Rev. 08/07)

UNITED STATES PATENT AND TRADEMARK OFFICE

Commissioner for Patents
United States Patent and Trademark Office
P.O. Box 1450
Alexandria, VA 22313-1450
www.uspto.gov
DIW Dec-08

GREENBERG TRAURIG, LLP (SV)
IP DOCKETING
2450 COLORADO AVENUE
SUITE 400E
SANTA MONICA CA 90404

RECEIVED
DEC 23 2008
OFFICE OF PETITIONS

In re Application of	:	
Lam and Lieske	:	
Application Number: 12/186482	:	DECISION REFUSING STATUS
Filing Date: 08/05/2008	:	UNDER 37 CFR 1.47(a)
Attorney Docket Number: 076705-230400/US	:	

This is a decision on the petition filed on November 18, 2008, under 37 CFR 1.47(a).

The petition is **DISMISSED**.

Rule 47 applicant is given TWO MONTHS from the mailing date of this decision to reply, correcting the below-noted deficiencies. Any reply should be entitled "Request for Reconsideration of Petition Under 37 CFR 1.47(a)," and should only address the deficiencies noted below, except that the reply may include an oath or declaration executed by the non-signing inventor. **FAILURE TO RESPOND WILL RESULT IN ABANDONMENT OF THE APPLICATION.** Extensions of time may be obtained in accordance with 37 CFR 1.136(a).

The above-identified application was filed on August 5, 2008, with a declaration naming Man Tat Lam and Jay H. Lieske, Jr., as joint inventors, signed by joint inventor Lieske.

Accordingly, on August 18, 2008, the Office of Patent Application Processing mailed a Notice to File Missing Parts of Nonprovisional Application, requiring the signature of Man Tat Lam on the declaration, and a surcharge for its late filing.

In response, on November 18, 2008, the subject petition was filed, along with a one (1) month extension of time. Petitioner states that a copy of the application was sent by email to the non-signing inventor, but that the inventor sent back an email stating that he "will need to charge for reviewing" the document.

A grantable petition under 37 CFR 1.47(a) requires:

(1) proof that the non-signing inventor cannot be reached or located, notwithstanding diligent effort, or refuses to sign the oath or declaration after having been presented with the application papers (specification, claims and drawings);

(2) an acceptable oath or declaration in compliance with 35 U.S.C. §§ 115 and 116;

(3) the petition fee;

(4) a surcharge of $130 or $65 (small entity) if the petition and/or declaration is not filed at the time of filing the application, and

(5) a statement of the last known address of the non-signing inventor.

The petition lacks item (1).

The petition must be dismissed because sufficient proof has not been provided that the inventor received the application papers.

Petitioners have provided a declaration from counsel's secretary, Anne Collette, stating that Lehua Wang, a patent agent working for petitioner's counsel, emailed a copy of the application papers to the non-signing inventor. However, it is unclear if Ms. Collette's statement was made by a person with first-hand knowledge of the details.

It is additionally noted that a copy of emails to the non-signing inventor have been included. However, it cannot be determined from a review of the email messages whether the application papers were included as an attachment or otherwise forwarded with the email.

Petitioner must provide proof that a copy of the application (specification, including the claims, drawings, if any, and the Declaration) was sent to given to the non-signing inventor for review.[1] Acceptable proof includes a copy of the cover letter transmitting the application papers to the non-signing inventor

[1] MPEP 409.03(d).

or details given in an affidavit or declaration of facts by a person having first-hand knowledge of the details.

Further, the transmission of documents via Email, while a common practice, can be problematic. Transmission and receipt of documents-whether in image, word-processing, spreadsheet or other form-can be effected by differences in software generation between the sender and recipient(s), and other interferences include but are not limited to sender's and recipient's Internet service provider's (ISP) and/or office/personal security firewall systems.

Thus, in the absence of an express statement from a non-signing inventor(s) that he/she/they have received, opened and read a document, unlike a printed page in the language of the recipient there is as of this writing no basis to presume that an Emailed document was in a form that can be read and comprehended.

Likewise, before a *bona fide* refusal to sign the declaration can be alleged, petitioners must show that a copy of the application was sent or given to the inventor. If the inventor refuses in writing, petitioners must submit a copy of that written refusal with any renewed petition. If the refusal was made orally to a person, then that person must provide details of the refusal in an affidavit or declaration of fact.

Petitioners may show proof that a copy of the application was sent or given to the non-signing inventor for review by providing a copy of the cover letter transmitting the application papers (specification, including claims, drawings, if any, and the declaration) to the non-signing inventor or details given in an affidavit or declaration of facts by a person having first-hand knowledge of the details.

Accordingly, it is requested that petitioners provided statements by persons with first-hand knowledge from the persons who sent the email, including the attachments, to the non-signing inventor.

The late-filing surcharge will be charged to counsel's deposit account in accordance with the Response to Notice to File Missing Parts filed on November 18, 2008.

Further correspondence with respect to this matter should be addressed as follows:

By mail: Mail Stop Petition

Commissioner for Patents
P.O. Box 1450
Alexandria, VA 22313-1450

By FAX: (571) 273-8300
Attn: Office of Petitions

By hand: Customer Service Window
Mail Stop Petition
Randolph Building
401 Dulany Street
Alexandria, VA 22314

Telephone inquiries related to this decision should be directed to the undersigned at 571-272-3231.

DWood

Douglas I. Wood
Senior Petitions Attorney
Office of Petitions

UNITED STATES PATENT AND TRADEMARK OFFICE

Commissioner for Patents
United States Patent and Trademark Office
P.O. Box 1450
Alexandria, VA 22313-1450
www.uspto.gov
DIW Feb-09

GREENBERG TRAURIG, LLP (SV)
IP DOCKETING
2450 COLORADO AVENUE
SUITE 400E
SANTA MONICA CA 90404

MAILED

FEB 23 2009

OFFICE OF PETITIONS

In re Application of	:	
Lam and Lieske	:	DECISION NOTING JOINDER
Application Number: 12/186482	:	OF INVENTORS AND PETITION
Filing Date: 08/05/2008	:	UNDER 37 CFR 1.47(a) MOOT
Attorney Docket Number: 076705-230400/US	:	

Papers filed on January 30, 2009, in response to the decision dismissing petition mailed on December 23, 2008, included a Declaration signed by the previously non-signing inventor, in compliance with 37 CFR 1.63.

The petition is **dismissed as moot**.

In view of the joinder of the inventors, further consideration under 37 CFR 1.47(a) is moot; this application does not have any rule 1.47(a) status and no such status should appear on the file wrapper. This application need not be returned to this office for any further consideration under 37 CFR 1.47(a).

This application will be referred to the Office of Patent Application Processing for further processing.

Telephone inquiries related to this decision should be directed to the undersigned at (571) 272-3231.

DWood

Douglas I. Wood
Senior Petitions Attorney
Office of Petitions

UNITED STATES PATENT AND TRADEMARK OFFICE

Commissioner for Patents
United States Patent and Trademark Office
P.O. Box 1450
Alexandria, VA 22313-1450
www.uspto.gov

NXP, B.V.
NXP INTELLECTUAL PROPERTY DEPARTMENT
M/S41-SJ
1109 MCKAY DRIVE
SAN JOSE CA 95131

COPY MAILED

FEB 03 2009

OFFICE OF PETITIONS

In re Application of	:	
Lindstrom et al.	:	DECISION GRANTING STATUS
Application No. 12/186491	:	UNDER 37 CFR 1.47(a)
Filed: August 5, 2008	:	
Attorney Docket No. 81373766US02	:	

This is in response to the petition under 37 CFR 1.47(a), filed December 5, 2008.

The petition is **GRANTED.**

Petitioner has shown that the non-signing inventor cannot be found to join in the filing of the above-identified application.

The application and papers have been reviewed and found in compliance with 37 CFR 1.47(a). This application is hereby accorded Rule 1.47(a) status.

As provided in 37 CFR 1.47(c), this Office will forward notice of this application's filing to the non-signing inventor at the address given in the petition. Notice of the filing of this application will also be published in the Official Gazette.

This application is being referred to the Office of Patent Application Processing for pre-examination processing.

Telephone inquiries regarding this decision should be directed to the undersigned at (571) 272-6692.

Christopher Bottorff
Petitions Examiner
Office of Petitions

UNITED STATES PATENT AND TRADEMARK OFFICE

Commissioner for Patents
United States Patent and Trademark Office
P.O. Box 1450
Alexandria, VA 22313-1450
www.uspto.gov

Ms. Eileen Carlson
P.O. Box 22595
San Diego, CA 92192-2595

COPY MAILED

FEB 03 2009

OFFICE OF PETITIONS

In re Application of
Mats Lindstrom et al.
Application No. 12/186,491
Filed: August 5, 2008
For: INTEGRATED PROGRAMMABLE TUNER

Dear Ms. Carlson:

You are named as a joint inventor in the above-identified United States patent application, filed under the provisions of 35 U.S.C. 116 (United States Code), and 37 CFR 1.47(a), Rules of Practice in Patent Cases. Should a patent be granted on the application, you will be designated therein as a joint inventor.

As a named inventor you are entitled to inspect any paper in the file wrapper of the application, order copies of all or any part thereof (at a prepaid cost per 37 CFR 1.19) or make your position of record in the application. Alternatively, you may arrange to do any of the preceding through a registered patent attorney or agent presenting written authorization from you. If you care to join the application, counsel of record (see below) would presumably assist you. Joining the application would entail the filing of an appropriate oath or declaration by you pursuant to 37 CFR 1.63.

Telephone inquiries regarding this communication should be directed to Christopher Bottorff at (571) 272-6692. Requests for information regarding your application should be directed to the File Information Unit at (703) 308-2733. Information regarding how to pay for and order a copy of the application, or a specific paper in the application, should be directed to the Certification Division at (571) 272-3150 or 1 (800) 972-6382 (outside the Washington, DC area).

Christopher Bottorff
Petitions Examiner
Office of Petitions

cc: NXP, B.V.
NXP INTELLECTUAL PROPERTY DEPARTMENT
M/S41-SJ
1109 MCKAY DRIVE
SAN JOSE CA 95131

UNITED STATES PATENT AND TRADEMARK OFFICE

UNITED STATES DEPARTMENT OF COMMERCE
United States Patent and Trademark Office
Address: COMMISSIONER FOR PATENTS
P.O. Box 1450
Alexandria, Virginia 22313-1450
www.uspto.gov

HAYNES AND BOONE, LLP
IP Section
2323 Victory Avenue
Suite 700
Dallas, TX 75219

Mail Date: 04/21/2010

Applicant	: Mukund Purshottam Khatri	: DECISION ON REQUEST FOR
Patent Number	: 7600112	: RECALCULATION of PATENT
Issue Date	: 10/06/2009	: TERM ADJUSTMENT IN VIEW
Appliction No	: 12/186,647	: OF WYETH AND NOTICE OF INTENT TO
Filed	: 08/06/2008	: ISSUE CERTIFICATE OF CORRECTION
		:

The Request for Recalculation is **GRANTED** to the extent indicated.

The patent term adjustment has been determined to be **0** days. The USPTO will *sua sponte* issue a certificate of correction reflecting the amount of PTA days determined by the recalculation.

Prior to the issuance of the certificate of correction, the USPTO will afford patentee an opportunity to be heard and request reconsideration. Accordingly, patentee has **one month or thirty (30) days**, whichever is longer, to file a request for reconsideration of this patent term adjustment calculation. See 35 U.S.C. 154(b)(3)(B)(ii) and 37 CFR 1.322(a)(4). No extensions of time will be granted under 37 CFR 1.136.

Patentee should use document code PET.OP if electronically filing a request for reconsideration of this patent term adjustment calculation. The patentee must also include the information required by 37 CFR 1.705(b)(2) and the fee required by 37 CFR 1.18(e). If patentee does not file a timely request for reconsideration of this patent term adjustment calculation including the information required by 37 CFR 1.705(b)(2) and the fee required by 37 CFR 1.18(e), the USPTO will issue a certificate of correction reflecting the PTA determination noted above.

Patentee should be aware that in order to preserve the right to review in the United States District Court for the District of Columbia of the USPTO patent term adjustment determination, patentee must ensure that he or she also take the steps required under 35 U.S.C. 154(b)(4)(A) in a timely manner. Nothing in the request for recalculation should be construed as providing an alternative time frame for commencing a civil action under 35 U.S.C. 154(b)(4)(A).

Any questions concerning this decision should be directed to the Office of Patent Legal Administration at 571-272-7702.

UNITED STATES PATENT AND TRADEMARK OFFICE

Commissioner for Patents
United States Patent and Trademark Office
P.O. Box 1450
Alexandria, VA 22313-1450
www.uspto.gov

AKIN GUMP STRAUSS HAUER & FELD, LLP
P.O. BOX 130688
DALLAS, TX 75313-0688

MAILED

MAY 11 2010

OFFICE OF PETITIONS

In re Application of	:	
Leslie Owen Paull	:	DECISION ON PETITION
Application No. 12/186,674	:	TO WITHDRAW
Filed: August 6, 2008	:	FROM RECORD
Attorney Docket No. 686635.0001	:	

This is a decision on the Request to Withdraw as attorney or agent of record under 37 C.F.R. § 1.36(b), filed March 5, 2010.

The request is **NOT APPROVED** because it is moot.

A review of the file record indicates that on March 25, 2010 the power of attorney to Akin Gump Strauss Hauer & Feld, LLP was revoked by the applicant of the patent application. Accordingly, the request to withdraw under 37 C.F.R. § 1.36(b) is moot.

All future communications from the Office will be directed to the below-listed address until otherwise notified by applicant.

Telephone inquires concerning this decision should be directed to the undersigned at 571-272- 7751. All other inquires concerning either the examination or status of the application should be directed to the Technology Center.

Joan Olszewski
Petitions Examiner
Office of Petitions

cc: THOMAS D. FORTENBERRY
ATTORNEY AT LAW
PO BOX 2099
WOODVILLE TX 75979

UNITED STATES PATENT AND TRADEMARK OFFICE

UNITED STATES DEPARTMENT OF COMMERCE
United States Patent and Trademark Office
Address: COMMISSIONER FOR PATENTS
P.O. Box 1450
Alexandria, Virginia 22313-1450
www.uspto.gov

HAYNES AND BOONE, LLP
IP Section
2323 Victory Avenue
Suite 700
Dallas, TX 75219

Mail Date: 04/21/2010

Applicant	: Tiak Hooy Sim	: DECISION ON REQUEST FOR
Patent Number	: 7588220	: RECALCULATION of PATENT
Issue Date	: 09/15/2009	: TERM ADJUSTMENT IN VIEW
Appliction No	: 12/186,691	: OF WYETH AND NOTICE OF INTENT TO
Filed	: 08/06/2008	: ISSUE CERTIFICATE OF CORRECTION
		:

The Request for Recalculation is **GRANTED** to the extent indicated.

The patent term adjustment has been determined to be **0** days. The USPTO will *sua sponte* issue a certificate of correction reflecting the amount of PTA days determined by the recalculation.

Prior to the issuance of the certificate of correction, the USPTO will afford patentee an opportunity to be heard and request reconsideration. Accordingly, patentee has **one month or thirty (30) days**, whichever is longer, to file a request for reconsideration of this patent term adjustment calculation. See 35 U.S.C. 154(b)(3)(B)(ii) and 37 CFR 1.322(a)(4). No extensions of time will be granted under 37 CFR 1.136.

Patentee should use document code PET.OP if electronically filing a request for reconsideration of this patent term adjustment calculation. The patentee must also include the information required by 37 CFR 1.705(b)(2) and the fee required by 37 CFR 1.18(e). If patentee does not file a timely request for reconsideration of this patent term adjustment calculation including the information required by 37 CFR 1.705(b)(2) and the fee required by 37 CFR 1.18(e), the USPTO will issue a certificate of correction reflecting the PTA determination noted above.

Patentee should be aware that in order to preserve the right to review in the United States District Court for the District of Columbia of the USPTO patent term adjustment determination, patentee must ensure that he or she also take the steps required under 35 U.S.C. 154(b)(4)(A) in a timely manner. Nothing in the request for recalculation should be construed as providing an alternative time frame for commencing a civil action under 35 U.S.C. 154(b)(4)(A).

Any questions concerning this decision should be directed to the Office of Patent Legal Administration at 571-272-7702.

UNITED STATES PATENT AND TRADEMARK OFFICE

Commissioner for Patents
United States Patent and Trademark Office
P.O. Box 1450
Alexandria, VA 22313-1450
www.uspto.gov

COPY MAILED

NOV 17 2009

OFFICE OF PETITIONS

J C PATENTS
4 VENTURE, SUITE 250
IRVINE CA 92618

In re Application of	:	
Chien-Hua Chu et al.	:	
Application No. 12/186,711	:	NOTICE
Filed: August 6, 2008	:	
Attorney Docket No. **JCLA25472**	:	

This is a notice regarding your request filed September 30, 2009, for acceptance of a fee deficiency submission under 37 CFR 1.28.

The Office no longer investigates or rejects original or reissue applications under 37 CFR 1.56. **1098 Off. Gaz. Pat. Office 502 (January 3, 1989)**. Therefore, nothing in this Notice is intended to imply that an investigation was done.

Your fee deficiency submission under 37 CFR 1.28 is hereby **ACCEPTED**.

This application is no longer entitled to small entity status. Accordingly, all future fees paid in this application must be paid at the large entity rate.

Inquiries related to this communication should be directed to the undersigned at (571) 272-4584.

JoAnne Burke
Petitions Examiner
Office of Petitions

UNITED STATES PATENT AND TRADEMARK OFFICE

Commissioner for Patents
United States Patent and Trademark Office
P.O. Box 1450
Alexandria, VA 22313-1450
www.uspto.gov

FAY SHARPE LLP
1100 SUPERIOR AVENUE, SEVENTH FLOOR
CLEVELAND, OH 44114

COPY MAILED
SEP 15 2008

In re Application of	:	
ARTMEIER, et al.	:	
Application No. 12/186,822	:	DECISION ON PETITION TO MAKE
Filed: August 6, 2008	:	SPECIAL UNDER 37 CFR 1.102(C)(1)
Attorney Docket No. **ARM 2 00002**	:	
	:	

This is a decision on the petition under 37 CFR 1.102(c)(1), filed August 6, 2008, to make the above-identified application special based on applicant's age as set forth in M.P.E.P. § 708.02, Section IV.

The petition is **GRANTED.**

A grantable petition to make an application special under 37 CFR 1.102(c)(1) and MPEP § 708.02, Section IV: Applicant's Age must be accompanied by evidence showing that at least one of the applicants is 65 years of age, or more, such as a birth certificate or a statement by applicant. No fee is required

The instant petition includes the declaration of inventors Richard Artmeier and James T. McGrane, attesting to their age. Accordingly, the above-identified application has been accorded "special" status.

Inquiries concerning either the examination or status of the application should be directed to the Technology Center 571-272-3700.

Telephone inquiries concerning this decision should be directed to the undersigned at 571-272-7253.

The application is being forwarded to the Technology Center Art Unit 3724 for action on the merits commensurate with this decision.

Monica A. Graves
Petitions Examiner
Office of Petitions

UNITED STATES PATENT AND TRADEMARK OFFICE

Commissioner for Patents
United States Patent and Trademark Office
P.O. Box 1450
Alexandria, VA 22313-1450
www.uspto.gov

K&L GATES LLP
P.O. BOX 1135
CHICAGO IL 60690

MAILED

JUN 24 2010

OFFICE OF PETITIONS

In re Application of Wilhelm Wimmreuter Application No. 12/186,840 Filed: August 6, 2008 Attorney Docket No. 119010-136(continuation)	: : : : :	DECISION ON PETITION TO WITHDRAW FROM RECORD

This is a decision on the Request to Withdraw as attorney or agent of record under 37 C.F.R. § 1.36(b) filed May 27, 2010, which is being treated as a request to withdraw from employment in a proceeding before the Office under 37 C.F.R. § 10.40.

The request is **DISMISSED**.

A review of the file record indicates that Dickinson Wright, PLLC does not have power of attorney in this patent application. Accordingly, the request to withdraw under 37 C.F.R. § 1.36(b) is not applicable.

The request to change the correspondence address of record is not accepted in view of Dickinson Wright, PLLC not having power of attorney. See MPEP §§ 601.03 and 405.

All future communications from the Office will continue to be directed to the above-listed address until otherwise notified by applicant.

Further, the address given on the petition differs from the address of record. A courtesy copy of this decision is being mailed to the address given on the petition; however, the Office will mail all future correspondence solely to the address of record.

Currently, there is no outstanding Office action that requires a reply.

Telephone inquires concerning this decision should be directed to the undersigned at 571-272-7751.

Joan Olszewski
Petitions Examiner
Office of Petitions

cc: DICKINSON WRIGHT, PLLC
1875 EYE STREET, NW
SUITE 1200
WASHINGTON, DC 20006

UNITED STATES PATENT AND TRADEMARK OFFICE

Commissioner for Patents
United States Patent and Trademark Office
P.O. Box 1450
Alexandria, VA 22313-1450
www.uspto.gov

DICKSTEIN SHAPIRO, LLP
1633 BROADWAY
NEW YORK NY 10019

MAILED

JUN 08 2010

OFFICE OF PETITIONS

In re Application of	:	
Sheree Wichard, et al.	:	
Application No. 12/186,902	:	DECISION ON PETITION
Filed: August 6, 2008	:	TO WITHDRAW
Attorney Docket No. K9626.0001	:	FROM RECORD
	:	

This is a decision on the Request to Withdraw as attorney or agent of record under 37 C.F.R. § 1.36(b), filed April 13, 2010.

The request is **APPROVED**.

A grantable request to withdraw as attorney/agent of record must be signed by every attorney/agent seeking to withdraw or contain a clear indication that one attorney is signing on behalf of another/others.

The request was signed by Richard LaCava on behalf of all attorneys of record who are associated with customer No. 32172. All attorneys/agents associated with the Customer Number 32172 have been withdrawn. Applicant is reminded that there is no attorney of record at this time.

All future correspondence will be directed to the first named inventor Sheree Wichard at the address indicated below.

There is an outstanding Office action mailed January 20, 2010 that requires a reply from the applicant.

Telephone inquiries concerning this decision should be directed to undersigned at 571-272-1642. All other inquiries concerning the examination or status of this application should be directed to the Technology Center.

/AMW/
April M. Wise
Petitions Examiner
Office of Petitions

cc: SHEREE WICHARD
438 12 STREET
SUITE B
BROOKLYN, NY 11215

UNITED STATES PATENT AND TRADEMARK OFFICE

UNITED STATES DEPARTMENT OF COMMERCE
United States Patent and Trademark Office
Address: COMMISSIONER FOR PATENTS
P.O. Box 1450
Alexandria, Virginia 22313-1450
www.uspto.gov

APPLICATION NUMBER	FILING OR 371(C) DATE	FIRST NAMED APPLICANT	ATTY. DOCKET NO./TITLE
12/186,902	08/06/2008	Sheree Wichard	K9626.0001

CONFIRMATION NO. 2012

POWER OF ATTORNEY NOTICE

32172
DICKSTEIN SHAPIRO LLP
1633 Broadway
NEW YORK, NY 10019

OC000000041963658

Date Mailed: 06/07/2010

NOTICE REGARDING CHANGE OF POWER OF ATTORNEY

This is in response to the Power of Attorney filed 04/13/2010.

- The withdrawal as attorney in this application has been accepted. Future correspondence will be mailed to the new address of record. 37 CFR 1.33.

/amwise/

Office of Data Management, Application Assistance Unit (571) 272-4000, or (571) 272-4200, or 1-888-786-0101

UNITED STATES PATENT AND TRADEMARK OFFICE

Commissioner for Patents
United States Patent and Trademark Office
P.O. Box 1450
Alexandria, VA 22313-1450
www.uspto.gov

COPY MAILED

DEC 04 2008

OFFICE OF PETITIONS

HENRY M FEIEREISEN LLC
HENRY M FEIEREISEN
708 THIRD AVENUE
SUITE 1501
NEW YORK NY 10017

In re Application of	:	
Hitz, et al.	:	
Application No. 12/186,931	:	DECISION REFUSING STATUS
Filed: August 6, 2008	:	UNDER 37 CFR 1.47(a)
Attorney Docket No. HITZ	:	
	:	

This is in response to petition under 37 CFR 1.47(a), filed October 21, 2008.

The petition under 37 CFR 1.47(a) is **DISMISSED**.

Rule 47 applicant is given **TWO MONTHS** from the mailing date of this decision to reply, correcting the below-noted deficiencies. Any reply should be entitled "Request for Reconsideration of Petition Under 37 CFR 1.47(a)," and should only address the deficiencies noted below, except that the reply may include an oath or declaration executed by the non-signing inventor. **Failure to respond will result in abandonment of the application.** Any extensions of time will be governed by 37 CFR 1.136(a).

Accompanying the petition is a declaration containing a signature in the signature blocks for both inventors Hitz and Viallard, despite petitioner's assertion that Viallard had not signed the declaration.

A grantable petition under 37 CFR 1.47(a) requires: (1) proof that the non-signing inventor cannot be reached after diligent effort or refuses to sign the oath or declaration after having been presented with the application papers (specification, claims, drawings, oath or declaration); (2) an acceptable oath or declaration in compliance with 37 CFR 1.63; (3) the petition fee; and (4) a statement of the last known address of the non-signing inventor. Rule 47 applicant has not met requirement (2) above.

As to requirement (2), the signature block for inventor Viallard should be left blank. As this is not a 37 CFR 1.47(b) petition, it is not acceptable that another party sign for Viallard. Rather, a declaration with a blank signature block for the non-signing inventor will be treated as having been signed by all the available joint inventors on behalf of the non-signing inventor.[1]

A petition under 37 CFR 1.47 requires a fee of $200. Petitioner submitted $130. The difference of $70 has been charged to Deposit Account No. 06-0502, as authorized.

Further correspondence with respect to this matter should be addressed as follows:

By mail: Mail Stop Petitions
Commissioner for Patents
P.O. Box 1450
Alexandria VA 22313-1450

By FAX: (571)273-8300
Attn: Office of Petitions

Telephone inquiries regarding this decision should be directed to the undersigned at (571)272-3207.

Cliff Congo
Petitions Attorney
Office of Petitions

See MPEP 409.03(a).

UNITED STATES PATENT AND TRADEMARK OFFICE

Commissioner for Patents
United States Patent and Trademark Office
P.O. Box 1450
Alexandria, VA 22313-1450
www.uspto.gov

HENRY M FEIEREISEN LLC
HENRY M FEIEREISEN
708 THIRD AVENUE
SUITE 1501
NEW YORK NY 10017

MAILED

FEB 17 2009

OFFICE OF PETITIONS

In re Application of Hitz, et al. Application No. 12/186,931 Filed: August 6, 2008 Attorney Docket No. HITZ	: : : : : : :	DECISION ACCORDING STATUS UNDER 37 CFR 1.47(a)

This is in response to the renewed petition under 37 CFR 1.47(a), filed January 26, 2009.

The petition under 37 CFR 1.47(a) is **GRANTED**.

Applicants filed a petition under 37 CFR 1.47(a) on October 21, 2008. However, the petition was dismissed in a decision mailed on December 4, 2008. The petition was dismissed because applicants did not submit a proper 37 CFR 1.63 declaration.

With the instant petition, Applicants have submitted a declaration signed by Hitz, with the signature block for Viallard left blank.

The above-identified application and papers have been reviewed and found to be in compliance with 37 CFR 1.47(a). Accordingly, the above-identified application is hereby accorded Rule 1.47(a) status. As provided in 37 CFR 1.47(c), this Office will forward notice of this application's filing to the non-signing inventor at the last known address provided on the declaration. Notice of the filing of this application will also be published in the Official Gazette.

The application is being forwarded to the Office of Patent Application Processing for pre-examination processing.

Telephone inquiries regarding this decision should be directed to the undersigned at (571)272-3207.

Cliff Congo
Petitions Attorney
Office of Petitions

UNITED STATES PATENT AND TRADEMARK OFFICE

Commissioner for Patents
United States Patent and Trademark Office
P.O. Box 1450
Alexandria, VA 22313-1450
www.uspto.gov

BENJAMIN VIALLARD
23 RUE DE CHANTIERS
78000 VERSAILLES
FRANCE

MAILED

FEB 17 2009

OFFICE OF PETITIONS

In re Application of
Hitz, et al.
Application No. 12/186,931
Filed: August 6, 2008
Title: Dashboard Support

LETTER

Dear Mr. Viallard:

You are named as a joint inventor in the above-identified United States patent application filed under the provisions of 35 USC 116 (United States Code) and 37 CFR 1.47(a), Rules of Practice in Patent Cases. Should a patent be granted on the application you will be designated therein as a joint inventor.

As a joint inventor, you are entitled to inspect any paper in the file wrapper of the application, order copies of all or any part thereof (at a prepaid cost per 37 CFR 1.19) or make your position of record in the application. Alternatively, you may arrange to do any of the preceding through a registered patent attorney or agent presenting written authorization from you. If you care to join the application, agent of record would presumably assist you. Joining in the application would entail the filing of an appropriate oath or declaration by you pursuant to 37 CFR 1.63.

Telephone inquiries regarding this communication should be directed to Petitions Attorney Cliff Congo at (571)272-3207. Requests for information regarding your application should be directed to the File Information Unit at (703) 308-2733. Information regarding how to pay for and order a copy of the application, or a specific paper in the application, should be directed to the Certification Division at (703) 308-9726 or 1-800-972-6382 (outside the Washington D.C. area).

Cliff Congo
Petitions Attorney
Office of Petitions

UNITED STATES PATENT AND TRADEMARK OFFICE

Commissioner for Patents
United States Patent and Trademark Office
P.O. Box 1450
Alexandria, VA 22313-1450
www.uspto.gov

JONES DAY
222 EAST 41ST ST
NEW YORK NY 10017

MAILED

JUN 04 2010

OFFICE OF PETITIONS

In re Application of	:	
Towfiq et al.	:	DECISION ON PETITION
Application No. 12/186,967	:	TO WITHDRAW
Filed: August 6, 2008	:	FROM RECORD
Attorney Docket No. 12377-003-999	:	

This is a decision on the Request to Withdraw as attorney or agent of record under 37 C.F.R. § 1.36(b) filed April 23, 2010, which is being treated as a request to withdraw from employment in a proceeding before the Office under 37 C.F.R. § 10.40.

The request is **DISMISSED**.

A review of the file record indicates that Evangeline Shih does not have power of attorney in this patent application. Accordingly, the request to withdraw under 37 C.F.R. § 1.36(b) is not applicable.

The request to change the correspondence address of record is not accepted in view of Evangeline Shih not having power of attorney. See MPEP §§ 601.03 and 405.

All future communications from the Office will continue to be directed to the above-listed address until otherwise notified by applicant.

Currently, there is no outstanding Office action that requires a reply.

Telephone inquires concerning this decision should be directed to the undersigned at 571-272-7751.

Joan Olszewski
Petitions Examiner
Office of Petitions

UNITED STATES PATENT AND TRADEMARK OFFICE

UNITED STATES DEPARTMENT OF COMMERCE
United States Patent and Trademark Office
Address: COMMISSIONER FOR PATENTS
P.O. Box 1450
Alexandria, Virginia 22313-1450
www.uspto.gov

KRAMER LEVIN NAFTALIS & FRANKEL LLP
1177 Avenue of the Americas
New York, NY 10036

Mail Date: 04/20/2010

Applicant	: Kyle Yeates	: DECISION ON REQUEST FOR
Patent Number	: 7638717	: RECALCULATION of PATENT
Issue Date	: 12/29/2009	: TERM ADJUSTMENT IN VIEW
Appliction No	: 12/186,995	: OF WYETH AND NOTICE OF INTENT TO
Filed	: 08/06/2008	: ISSUE CERTIFICATE OF CORRECTION
		:

The Request for Recalculation is **GRANTED** to the extent indicated.

The patent term adjustment has been determined to be **0** days. The USPTO will *sua sponte* issue a certificate of correction reflecting the amount of PTA days determined by the recalculation.

Prior to the issuance of the certificate of correction, the USPTO will afford patentee an opportunity to be heard and request reconsideration. Accordingly, patentee has **one month or thirty (30) days**, whichever is longer, to file a request for reconsideration of this patent term adjustment calculation. See 35 U.S.C. 154(b)(3)(B)(ii) and 37 CFR 1.322(a)(4). No extensions of time will be granted under 37 CFR 1.136.

Patentee should use document code PET.OP if electronically filing a request for reconsideration of this patent term adjustment calculation. The patentee must also include the information required by 37 CFR 1.705(b)(2) and the fee required by 37 CFR 1.18(e). If patentee does not file a timely request for reconsideration of this patent term adjustment calculation including the information required by 37 CFR 1.705(b)(2) and the fee required by 37 CFR 1.18(e), the USPTO will issue a certificate of correction reflecting the PTA determination noted above.

Patentee should be aware that in order to preserve the right to review in the United States District Court for the District of Columbia of the USPTO patent term adjustment determination, patentee must ensure that he or she also take the steps required under 35 U.S.C. 154(b)(4)(A) in a timely manner. Nothing in the request for recalculation should be construed as providing an alternative time frame for commencing a civil action under 35 U.S.C. 154(b)(4)(A).

Any questions concerning this decision should be directed to the Office of Patent Legal Administration at 571-272-7702.

UNITED STATES PATENT AND TRADEMARK OFFICE

UNITED STATES DEPARTMENT OF COMMERCE
United States Patent and Trademark Office
Address: COMMISSIONER FOR PATENTS
P.O. Box 1450
Alexandria, Virginia 22313-1450
www.uspto.gov

GIFFORD, KRASS, SPRINKLE,
ANDERSON & CITKOWSKI, P.C.
P.O. BOX 7021
TROY, MI 48007-7021

Mail Date: 04/21/2010

Applicant	: David W. Schelberg	: DECISION ON REQUEST FOR
Patent Number	: 7611177	: RECALCULATION of PATENT
Issue Date	: 11/03/2009	: TERM ADJUSTMENT IN VIEW
Appliction No	: 12/187,004	: OF WYETH AND NOTICE OF INTENT TO
Filed	: 08/06/2008	: ISSUE CERTIFICATE OF CORRECTION
		:

The Request for Recalculation is **GRANTED** to the extent indicated.

The patent term adjustment has been determined to be **0** days. The USPTO will *sua sponte* issue a certificate of correction reflecting the amount of PTA days determined by the recalculation.

Prior to the issuance of the certificate of correction, the USPTO will afford patentee an opportunity to be heard and request reconsideration. Accordingly, patentee has **one month or thirty (30) days**, whichever is longer, to file a request for reconsideration of this patent term adjustment calculation. See 35 U.S.C. 154(b)(3)(B)(ii) and 37 CFR 1.322(a)(4). No extensions of time will be granted under 37 CFR 1.136.

Patentee should use document code PET.OP if electronically filing a request for reconsideration of this patent term adjustment calculation. The patentee must also include the information required by 37 CFR 1.705(b)(2) and the fee required by 37 CFR 1.18(e). If patentee does not file a timely request for reconsideration of this patent term adjustment calculation including the information required by 37 CFR 1.705(b)(2) and the fee required by 37 CFR 1.18(e), the USPTO will issue a certificate of correction reflecting the PTA determination noted above.

Patentee should be aware that in order to preserve the right to review in the United States District Court for the District of Columbia of the USPTO patent term adjustment determination, patentee must ensure that he or she also take the steps required under 35 U.S.C. 154(b)(4)(A) in a timely manner. Nothing in the request for recalculation should be construed as providing an alternative time frame for commencing a civil action under 35 U.S.C. 154(b)(4)(A).

Any questions concerning this decision should be directed to the Office of Patent Legal Administration at 571-272-7702.

UNITED STATES PATENT AND TRADEMARK OFFICE

Commissioner for Patents
United States Patent and Trademark Office
P.O. Box 1450
Alexandria, VA 22313-1450
www.uspto.gov

OBLON, SPIVAK, MCCLELLAND MAIER & NEUSTADT, P.C.
1940 DUKE STREET
ALEXANDRIA, VA 22314

COPY MAILED

MAR 2 0 2009

OFFICE OF PETITIONS

In re Application of Yabunouchi et al. :
Application No. 12/187,013 : Decision on Petition
Filing Date: August 6, 2008 :
Attorney Docket No. 330215US0 :

This is a decision on the petition under 37 CFR 1.59 filed October 30, 2008, requesting the Office expunge a portion of the application file.

The petition is **granted**.

On August 29, 2008, the Office mailed a Notice to File Missing Parts of Nonprovisional Application. The Notice set an extendable two-month time period for reply.

A reply to the August 29, 2008 Notice was electronically filed at 3:38 pm on October 29, 2008.

At 5:28 pm on October 29, 2008, petitioner also submitted papers intended for Application No. 12/186,947. The papers were clearly intended to be filed in Application No. 12/186,947. For example, the papers correctly list the application number, title, and first named inventor.

Unfortunately, the papers intended for Application No. 12/186,947, were inadvertently electronically transmitted into the file for the instant application.

Petitioner requests the Office expunge the inadvertently filed papers.

The papers have been expunged from the file for the instant application and transferred to the file for Application No. 12/186,947.

Technology Center Art Unit 2879 will be informed a decision has been issued in response to the pending petition and that the application is in condition for examination in due course.

Telephone inquiries regarding this communication should be directed to Petitions Attorney Steven Brantley at (571) 272-3203.

Charles Steven Brantley
Senior Petitions Attorney
Office of Petitions

UNITED STATES PATENT AND TRADEMARK OFFICE

Commissioner for Patents
United States Patent and Trademark Office
P.O. Box 1450
Alexandria, VA 22313-1450
www.uspto.gov

Paper No.

MORRIS MANNING MARTIN LLP
3343 PEACHTREE ROAD, NE
1600 ATLANTA FINANCIAL CENTER
ATLANTA GA 30326

MAILED
JUL 23 2010
OFFICE OF PETITIONS

In re Application of	:	
Shyu et al.	:	DECISION ON PETITION
Application No. 12/187,057	:	
Deposited: August 6, 2008	:	
Attorney Docket No. 21225-67582	:	

This is in response to the "PETITION UNDER 37 C.F.R. §1.57(a)" filed October 22, 2008, requesting that the specification present on filing of the above-identified application be replaced with the correct specification from the priority application which was inadvertently omitted from this application on filing.

Any request for reconsideration must be filed within TWO (2) MONTHS. This 2-month period is governed by 37 CFR 1.181(f) and is not extendable under 37 CFR 1.136.

BACKGROUND

Application papers in the above-identified application were deposited on August 6, 2008. On September 25, 2008, the Office mailed a NOTICE TO FILE CORRECTED APPLICATION PAPERS, notifying applicant that the application had been accorded a filing date of August 6, 2008; however, replacement drawings in compliance with 37 CFR 1.84 and 37 CFR 1.121(d) were required.

In response, applicant filed the instant petition. Applicant did not submit replacement drawings, but rather submitted the "correct" specification from the priority application to replace the specification present on filing of this application.

Applicant argues that the "correct" specification was inadvertently omitted.

OPINION

35 U.S.C. 111(a)(4) provides that:

> The filing date of an application shall be the date on which the specification and any required drawings are received in the Patent and Trademark Office.

On August 6, 2008, a specification and drawings were among the papers deposited in this application. Accordingly, pursuant to 35 U.S.C. 111(a)(4), these papers as deposited were accorded a filing date of August 6, 2008.

The "correct" specification as provided on instant petition was not among the papers present in the application on filing. Rather, the "wrong" specification was submitted. 37 CFR 1.57(a) is not the proper avenue for correcting this filing error.

For an application filed on or after September 21, 2004, if the material needed for a filing date is completely contained within a prior-filed application to which benefit is claimed, applicant may file a petition under 37 CFR 1.57(a)(3) along with the fee set forth in 37 CFR 1.17(f) and an amendment with the inadvertently omitted material requesting that the amendment be entered and the application be accorded a filing date as of the original date of deposit of the application papers. See 37 CFR 1.57(a)(3) and MPEP § 201.17. In this instance, no materials are needed for a filing date.

If a continuation or divisional application as originally filed on or after September 21, 2004 does not include an explicit incorporation by reference statement and is entitled to a filing date despite the inadvertent omission of a portion of the prior application(s), applicant may be permitted to add the omitted material by way of an amendment under 37 CFR 1.57(a). See 37 CFR 1.57(a)(1). In this instance, applicants are not trying to amend the application to include an inadvertent omission of a portion of the prior application, but rather are trying to change the specification in its entirety.

Accordingly, the petition is **DISMISSED** to the extent that petitioner requests a filing date of August 6, 2008 using the specification filed October 22, 2008.

The specification, including preliminary amendment, claims and abstract filed October 22, 2008 will *not* be entered.

The application as filed on August 6, 2008 with a filing date of August 6, 2008 will be examined in due course.

Further correspondence with respect to this decision should be addressed as follows:

By mail: Mail Stop Petition
Commissioner for Patents
P.O. Box 1450
Alexandria, VA 22313-1450

By FAX: (571) 273-8300
ATTN: NANCY JOHNSON
SENIOR PETITIONS ATTORNEY

By hand: Customer Service Window
Randolph Building
401 Dulany Street
Alexandria, VA 22314

Telephone inquiries related to this decision may be directed to Nancy Johnson, Senior Petitions Attorney at (571) 272-3219.

Anthony Knight
Director
Office of Petitions

UNITED STATES PATENT AND TRADEMARK OFFICE

Commissioner for Patents
United States Patent and Trademark Office
P.O. Box 1450
Alexandria, VA 22313-1450
www.uspto.gov

MAILED

FEB 10 2009

TECHNOLOGY CENTER 2100

CANTOR COLBURN LLP - IBM RESEARCH TRIANGLE PARK
20 Church Street
22nd Floor
Hartford CT 06103

In re Application of: COX, Jason A. et. al. Serial No.: **12/187,109** Filed: August 06, 2008 Docket: RPS920080119US1 Title: **MODIFICATION OF SOCIAL NETWORKS VIA DESIGN CODES**	DECISION ON PETITION TO MAKE SPECIAL FOR NEW APPLICATION UNDER 37 C.F.R. § 1.102 & M.P.E.P. § 708.02

This is a decision on the petition filed on August 06, 2008 to make the above-identified application special for accelerated examination procedure under 37 C.F.R. § 1.102(d).

The petition to make the application special is **GRANTED**.

The application is eligible for accelerated examination and the petition complies with the conditions for granting the application special status pursuant to the "Change to Practice for Petitions in Patent Applications to Make Special and for Accelerated Examination" published June 26, 2006, in the Federal Register. (71 Fed. Reg. 36323).

The prosecution of the instant application will be conducted expeditiously according to the following guidelines.

1. The application will be docketed to an examiner and taken up for action within two weeks of the date of this decision.

2. Restriction Practice:
   If the examiner determines that the claims are not directed to a single invention, a telephone request to elect one single invention will be made pursuant to MPEP 812.01. As a prerequisite to the grant of this petition, the applicant has agreed to make an oral election, by telephone, without traverse. If the applicant refuses to make an election without traverse, or the examiner cannot reach the applicant after a reasonable effort, the examiner will treat the first claimed invention (invention defined by claim 1) as having being constructively elected without traverse for examination.

3. Office action:
If it is determined that, after appropriate consultation, there is a potential rejection or any other issue to be addressed, the examiner will telephone the applicant and arrange an interview to discuss and resolve the issue. An Office action, other than a Notice of Allowance and Fee(s) Due (Notice of Allowance), will not be issued unless either: 1) an interview was conducted but did not result in agreed to action that places the application in condition for allowance, or, 2) a determination is made that an interview would be unlikely to result in the application being placed in condition for allowance, and 3) an internal conference has been held to review any rejection of any claim.

4. Time for Reply:
An Office action other than a Notice of Allowance or a final Office action will set a shortened statutory period of one month or thirty days, whichever is longer, for reply with no extension of time available under 37 CFR 1.136(a). Failure to timely file a reply within this non-extendible period for reply will result in the abandonment of the application.

5. Reply by Applicant:
A timely reply to an Office action other than the Notice of Allowance must be submitted electronically via EFS or EFS-web and limited to addressing the rejections, objections and requirement made. Any amendment that attempts to: 1) add claims which would result in more than three pending independent claims or more than twenty pending total claims; 2) present claims not encompassed by the pre-examination search or an updated accelerated examination support document; or 3) present claims that are directed a non-elected invention or an invention other than that previously claimed and examined in the application, will be treated as not fully responsive and will not be entered.

For any amendment to the claims (including any new claim) that is not encompassed by the accelerated examination support document, applicant must provide an updated accelerated examination support document that encompasses the amended or new claims at the time of filing of the amendment.

To proceed expeditiously with the examination, it is recommended that a reply with amendments made to any claim or with any new claim being added be accompanied by an updated accelerated examination support document or a statement explaining how the amended or new claim is supported by the original accelerated examination support document.

6. Information Disclosure Statement (IDS):
Any IDS filed during prosecution must be submitted electronically via EFS or EFS-web, accompanied by an updated accelerated examination support document, and in compliance with 37 CFR 1.97 and 1.98.

7. Post-Allowance Processing:
To expedite processing of the allowed application into a patent, the applicant must: 1) pay the required fees within one month of the date of the Notice of

Allowance, and 2) not file any post allowance papers not required by the Office. In no event may the issue fee be paid and accepted later than three months from the date of the Notice of Allowance.

8. After-Final and Appeal Procedures:
To expedite prosecution, after receiving the final Office action, applicant must: 1) promptly file a notice of appeal, an appeal brief and appeal fees; and 2) not request a pre-appeal brief conference.

Any amendment, affidavit or other evidence filed after final Office action must comply with applicable rules and the requirements outlined in numbered paragraphs 5 and 6 above.

On appeal, the application will proceed according to normal appeal procedures. After appeal, the application will again be treated special.

9. Proceedings Outside the Normal Examination Process:
If the application becomes involved in a proceeding that is outside the normal examination process (e.g., a secrecy order, national security review, interference proceeding, petitions under 37 CFR 1.181, 182 or 183), the application will be treated special before and after such proceeding.

10. Final Disposition:
The twelve-month goal of this accelerated examination procedure ends with a final disposition. The mailing of a final Office action, a Notice of Allowance, the filing of a Notice of Appeal, or the filing of a Request for Continued Examination (RCE) is the final disposition.

If, during prosecution, a paper is not filed electronically using EFS-web, a reply is filed but is not fully responsive, the application is involved in an appeal or a proceeding outside normal examination process, the application will still be examined expeditiously, however, the final disposition may occur more than twelve months from the filing of the application. In addition, Applicant is reminded that due to the dismissal of the previous petition submission, examination may not be completed within twelve months of the filing date of the application.

Any inquiry regarding this decision should be directed the undersigned whose telephone number is (571) 272-4147.

/bp/

Kim Huynh, Quality Assurance Specialist
Technology Center 2400,
Network, Multiplexing, Cable and Security

UNITED STATES PATENT AND TRADEMARK OFFICE

UNITED STATES DEPARTMENT OF COMMERCE
United States Patent and Trademark Office
Address: COMMISSIONER FOR PATENTS
P.O. Box 1450
Alexandria, Virginia 22313-1450
www.uspto.gov

APPLICATION NO.	FILING DATE	FIRST NAMED INVENTOR	ATTORNEY DOCKET NO.	CONFIRMATION NO.
12/187,109	08/06/2008	Jason A. Cox	RPS920080119US1	2393

59369 7590 02/11/2009
CANTOR COLBURN LLP - IBM RESEARCH TRIANGLE PARK
20 Church Street
22nd Floor
Hartford, CT 06103

EXAMINER
CALDWELL, ANDREW T

ART UNIT	PAPER NUMBER
2442	

NOTIFICATION DATE	DELIVERY MODE
02/11/2009	ELECTRONIC

Please find below and/or attached an Office communication concerning this application or proceeding.

The time period for reply, if any, is set in the attached communication.

Notice of the Office communication was sent electronically on above-indicated "Notification Date" to the following e-mail address(es):

usptopatentmail@cantorcolburn.com

UNITED STATES PATENT AND TRADEMARK OFFICE

UNITED STATES DEPARTMENT OF COMMERCE
United States Patent and Trademark Office
Address: COMMISSIONER FOR PATENTS
P.O. Box 1450
Alexandria, Virginia 22313-1450
www.uspto.gov

APPLICATION NO.	FILING DATE	FIRST NAMED INVENTOR	ATTORNEY DOCKET NO.	CONFIRMATION NO.
12/187,115	08/06/2008	Gerard GRIFFIOEN	50304/188001	2402

21559 7590 04/30/2009
CLARK & ELBING LLP
101 FEDERAL STREET
BOSTON, MA 02110

EXAMINER
CHIN, PAUL T

ART UNIT	PAPER NUMBER
3652	

NOTIFICATION DATE	DELIVERY MODE
04/30/2009	ELECTRONIC

Please find below and/or attached an Office communication concerning this application or proceeding.

The time period for reply, if any, is set in the attached communication.

Notice of the Office communication was sent electronically on above-indicated "Notification Date" to the following e-mail address(es):

patentadministrator@clarkelbing.com

UNITED STATES PATENT AND TRADEMARK OFFICE

Commissioner for Patents
United States Patent and Trademark Office
P.O. Box 1450
Alexandria, VA 22313-1450
www.uspto.gov

CLARK & ELBING LLP
101 FEDERAL STREET
BOSTON MA 02110

Applicant: Griffioen et al.
Appl. No.: 12/187,115
Filing Date: August 6, 2008
Title: THIADIAZOLE DERIVATIVES FOR THE TREATMENT OF NEURODEGENERATIVE DISEASES
Attorney Docket No.: 50304/188001
Pub. No.: US 2009/0054410 A1
Pub. Date: February 26, 2009

This is a decision on the request for republication of patent application publication under 37 CFR 1.221(a), filed on April 27, 2009, for the above-identified application.

The request under 37 CFR 1.221(a) is DISMISSED.

37 CFR 1.221(a) requires "a copy of the application in compliance with the Office electronic filing system requirements and be accompanied by the publication fee set forth in § 1.18(d) and the processing fee set forth in § 1.17(i)". If the request for republication does not comply with the electronic filing system requirements, the republication will not take place and the publication fee set forth in § 1.18(d) will be refunded. The processing fee will be retained.

The applicant did not supply a copy of the application in compliance with the Office electronic filing system, as required by 37 CFR 1.221(a) because **the Applicant submitted the papers as a "Document for an existing application", which are entered into the application file, and not as a "Pre-Grant Publication" submission**. The request for republication does not comply with the electronic filing system requirements, thus republication will not take place.

Any request for republication under 37 CFR 1.221(a), must be submitted via the EFS system, **as a Pre-Grant publication submission.** The applicant is directed to the following website for additional instructions on how to submit a Pre-Grant Publication submission via the electronic filing system:

http://www.uspto.gov/ebc/portal/efs/pgpub_quickstart.pdf

Any questions or requests for reconsideration of the decision should be addressed as follows:

By mail to: Mail Stop PGPUB
Commissioner for Patents
P.O. Box 1450
Alexandria, Va. 22313-1450

By facsimile: 571-273-8300

Telephone inquiries regarding this correspondence should be directed to The Office of Data Management at 571-272-4200.

Tammy J. Koontz
Program & Management Analyst
Office of Data Management

```
Adjustment date: 04/30/2009  KKING1
04/28/2009 INTEFSW  00001244 032095   12187115
01 FC:1504        300.00 CR
```

UNITED STATES PATENT AND TRADEMARK OFFICE

Commissioner for Patents
United States Patent and Trademark Office
P.O. Box 1450
Alexandria, VA 22313-1450
www.uspto.gov

CLARK & ELBING LLP
101 FEDERAL STREET
BOSTON, MA 02110

MAILED

JUL 01 2010

OFFICE OF PETITIONS

Applicant: Griffioen, et al.
Appl. No.: 12/187,115
Filing Date: August 6, 2008
Title: THIADIAZOLE DERIVATIVES FOR THE TREATMENT OF NEURODEGENERATIVE DISEASES
Attorney Docket No.: 50304/188001
Pub. No.: US 2009/0233911 A2
Pub. Date: September 17, 2009

This is a decision on the request for a corrected patent application publication under 37 CFR 1.221(b) or (a), received on November 16, 2009, for the above-identified application.

The request is granted.

The corrected patent application publication will be published in due course, unless the patent issues before the application is republished.

Inquiries relating to this matter may be directed to Mark Polutta at (571) 272-7709.

Mark Polutta
Senior Legal Advisor
Office of Patent Legal Administration
Office of the Deputy Commissioner
for Patent Examination Policy

UNITED STATES PATENT AND TRADEMARK OFFICE

UNITED STATES DEPARTMENT OF COMMERCE
United States Patent and Trademark Office
Address: COMMISSIONER FOR PATENTS
P.O. Box 1450
Alexandria, Virginia 22313-1450
www.uspto.gov

APPLICATION NO.	FILING DATE	FIRST NAMED INVENTOR	ATTORNEY DOCKET NO.	CONFIRMATION NO.
12/187,142	08/06/2008	Robert Jan Piechocki	330299US-2CRL CONT	2452

7590 01/15/2010
OBLON, SPIVAK, MCCLELLAND MAIER & NEUSTADT, L.L.P.
1940 DUKE STREET
ALEXANDRIA, VA 22314

EXAMINER
GHAYOUR, MOHAMMAD H

ART UNIT	PAPER NUMBER
2611	

NOTIFICATION DATE	DELIVERY MODE
01/15/2010	ELECTRONIC

DECISION GRANTING PETITION UNDER 37 CFR 1.138(d)

The declaration of express abandonment is recognized

This is in response to the petition under 37 CFR 1.138(d), requesting for a refund of any previously paid search fee and excess claims fee in the above-identified application.

The petition is granted.

The express abandonment is recognized. Any previously paid search fee and excess claims fee are hereby refunded.

Telephone inquiries should be directed to the Office of Data Management at (571) 272-4200.

Betty Powell

Patent Publication Branch
Office of Data Management

FORM PET651G (Rev. 08/07)

UNITED STATES PATENT AND TRADEMARK OFFICE

Commissioner for Patents
United States Patent and Trademark Office
P.O. Box 1450
Alexandria, VA 22313-1450
www.uspto.gov

COPY MAILED
DEC 22 2008

NXP, B.V.
NXP INTELLECTUAL PROPERTY DEPARTMENT
M/S41-SJ
1109 MCKAY DRIVE
SAN JOSE CA 95131

In re Application of	:	
Parker	:	ON PETITION
Application No.:12/187,220	:	
Filed: August 6, 2008	:	
Attorney Docket No.: 81373524US09-00CXT0298D	:	
For: GUARD INTERVAL ANALYSIS METHOD AND APPARATUS	:	

This is a decision on the petition under 37 CFR 1.47(b), filed November 6, 2008.

The petition is **DISMISSED**.

Any request for reconsideration of this decision must be submitted within TWO (2) MONTHS from the mail date of this decision. Extensions of time under 37 CFR 1.136(a) are permitted. Any response should be entitled "Request for Reconsideration of Petition Under 37 CFR 1.47(b)" and may include an oath or declaration executed by the inventor. **Failure to respond will result in abandonment of the application.**

A grantable petition under 37 CFR 1.47(b) requires:

(1) proof that the non-signing inventor cannot be reached or refuses to sign the oath or declaration;
(2) an acceptable oath or declaration;
(3) the petition fee;
(4) a statement of the last known address of the non-signing inventor;
(5) proof of proprietary interest; and
(6) proof of irreparable damage.

Applicant lacks items (1), (2), and (5) set forth above.

With respect to item (1), petitioner has failed to establish that the non-signing inventor cannot be located after diligent effort. The petition states that a package to Mr. Parker's last known address

was returned as the receiver has moved. In addition, an Internet search of www.thephonebook.bt.com for a J. Parker in Bath UK BA2 3NZ resulted in no hits.

A showing of **diligence** is critical in obtaining Rule 47 status when an inventor cannot be located or reached.

Petitioner should engage in further efforts to locate Mr. Parker. A broader Internet search for Mr. Parker beyond Bath UK BA2 3NZ is required. If possible petitioner should conduct a national registry search. Please provide documentary evidence relating to the attempts to locate Mr. Parker.

As to item (2), an oath or declaration for the patent application in compliance with 37 CFR 1.63 and 1.64 has not been presented. The declaration has not been signed by a properly empowered representative of the Rule 1.47(b) applicant. **No one** has signed the declaration. The declaration should be executed by an officer of the NXP, B.V.(President, Vice-President, Secretary, Treasurer of Chief Executive Officer). The signer should provide his/her title. A corporation may authorize any person to sign the application on its behalf. However, if the declaration is not signed by an attorney or officer of the corporation, then proof of authority of the person signing on behalf of the corporation must be submitted. MPEP 409.03(b)

An oath or declaration in compliance with 37 CFR 1.63 and 1.64 listing Mr. Parker's correct information, executed by the Rule 1.47(b) applicant is REQUIRED. See MPEP 409.03(b).

As to item (5), Per MPEP 409.03(f) Proof of Proprietary Interest: If the application has been assigned, a copy of the assignment (in the English language) must be submitted. The assignment must clearly indicate that the invention described in the 37 CFR 1.47(b) application was assigned to the 37 CFR 1.47(b) applicant. A statement under 37 CFR 3.73(b) by the assignee must also be submitted (see MPEP § 324). Petitioner has not provided a copy of the pertinent assignments.

Further correspondence with respect to this matter should be addressed as follows:

By mail: Mail Stop PETITION
Commissioner for Patents
Post Office Box 1450
Alexandria, VA 22313-1450

By hand: U.S. Patent and Trademark Office
Customer Service Window, Mail Stop Petition
Randolph Building
401 Dulany Street
Alexandria, VA 22314

By FAX: (571) 273-8300 - ATTN: Office of Petitions

Telephone inquiries should be directed to the undersigned at (571) 272-3230.

Shirene Willis Brantley

Shirene Willis Brantley
Senior Petitions Attorney
Office of Petitions

UNITED STATES PATENT AND TRADEMARK OFFICE

Commissioner for Patents
United States Patent and Trademark Office
P.O. Box 1450
Alexandria, VA 22313-1450
www.uspto.gov

NXP, B.V.
NXP INTELLECTUAL PROPERTY DEPARTMENT
M/S41-SJ
1109 MCKAY DRIVE
SAN JOSE CA 95131

MAILED

FEB 17 2009

OFFICE OF PETITIONS

In re Application of :
Parker :
Application No.:12/187,220 :
Filed: August 6, 2008 :
Attorney Docket No.: 81373524US09-00CXT0298D :
For: GUARD INTERVAL ANALYSIS METHOD AND :
APPARATUS :

ON PETITION

This is a decision on the reconsideration petition under 37 CFR 1.47(b), filed January 19, 2009.

The petition is **GRANTED**.

Petitioner has shown that the non-signing inventor, Jonathan Parker, cannot be located to join in the filing of the above-identified application.

The application and papers have been reviewed and found in compliance with 37 CFR 1.47(b). This application is hereby accorded Rule 1.47(b) status.

As provided in 37 CFR 1.47(c), this Office will forward notice of this application's filing to the non-signing inventor at the address given in the petition. Notice of the filing of this application will also be published in the Official Gazette.

This application is being referred to the Office of Patent Application Processing for pre-examination processing.

Telephone inquiries should be directed to the undersigned at (571) 272-3230.

Shirene Willis Brantley

Shirene Willis Brantley
Senior Petitions Attorney
Office of Petitions

UNITED STATES PATENT AND TRADEMARK OFFICE

Commissioner for Patents
United States Patent and Trademark Office
P.O. Box 1450
Alexandria, VA 22313-1450
www.uspto.gov

JONATHAN PARKER
66 THIRD AVENUE
OLDFIELD PARK, BATH
BA2 3NZ UK
UNITED KINGDOM

MAILED

FEB 17 2009

OFFICE OF PETITIONS

In re Application of :
Parker : LETTER
Application No.:12/187,220 :
Filed: August 6, 2008 :
Attorney Docket No.: 81373524US09-00CXT0298D :
For: GUARD INTERVAL ANALYSIS METHOD AND :
APPARATUS :

Dear Mr. Parker:

You are named as the sole inventor in the above-identified United States patent application, filed under the provisions of 35 U.S.C. 116 (United States Code), and 37 CFR 1.47(b), Rules of Practice in Patent Cases. Should a patent be granted on the application you will be designated therein as the sole inventor.

As the named inventor you are entitled to inspect any paper in the file wrapper of the application, order copies of all or any part thereof (at a prepaid cost per 37 CFR 1.19) or make your position of record in the application. Alternatively, you may arrange to do any of the preceding through a registered patent attorney or agent presenting written authorization from you. If you care to join the application, counsel of record (see below) would presumably assist you. Joining the application would entail the filing of an appropriate oath or declaration by you pursuant to 37 CFR 1.63.

Telephone inquiries regarding this communication should be directed to the undersigned at (571) 272-3230. Requests for information regarding your application should be directed to the File Information Unit at (703) 308-2733. Information regarding how to pay for and order a copy of the application, or a specific paper in the application, should be directed to the Certification Division at (571) 272-3150 or 1 (800) 972-6382 (outside the Washington, DC area).

Shirene Willis Brantley
Shirene Willis Brantley
Senior Petitions Attorney
Office of Petitions

ATTORNEYS OF RECORD: NXP, B.V.
NXP INTELLECTUAL PROPERTY DEPARTMENT
M/S41-SJ
1109 MCKAY DRIVE
SAN JOSE CA 95131

UNITED STATES PATENT AND TRADEMARK OFFICE

UNITED STATES DEPARTMENT OF COMMERCE
United States Patent and Trademark Office
Address: COMMISSIONER FOR PATENTS
P.O. Box 1450
Alexandria, Virginia 22313-1450
www.uspto.gov

APPLICATION NO.	FILING DATE	FIRST NAMED INVENTOR	ATTORNEY DOCKET NO.	CONFIRMATION NO.
12/187,244	08/06/2008	Tae-Seung Cho	61674/L550	2652

7590 06/30/2010
CHRISTIE, PARKER & HALE, LLP
PO BOX 7068
PASADENA, CA 91109-7068

EXAMINER
MACCHIAROLO, PETER J

ART UNIT	PAPER NUMBER
2879	

MAIL DATE	DELIVERY MODE
06/30/2010	PAPER

DECISION GRANTING PETITION UNDER 37 CFR 1.138(d)

The declaration of express abandonment is recognized

This is in response to the petition under 37 CFR 1.138(d), requesting for a refund of any previously paid search fee and excess claims fee in the above-identified application.

The petition is granted.

The express abandonment is recognized. Any previously paid search fee and excess claims fee are hereby refunded.

Telephone inquiries should be directed to the Office of Data Management at (571) 272-4200.

Patent Publication Branch
Office of Data Management

Adjustment date: 06/30/2010 BPOWELL

FORM PET651G (Rev. 08/07)

UNITED STATES PATENT AND TRADEMARK OFFICE

Commissioner for Patents
United States Patent and Trademark Office
P.O. Box 1450
Alexandria, VA 22313-1450
www.uspto.gov

FINNEGAN, HENDERSON, FARABOW,
GARRETT & DUNNER LLP
901 NEW YORK AVENUE, NW
WASHINGTON DC 20001-4413

COPY MAILED

SEP 04 2009

OFFICE OF PETITIONS

In re Application of	:	
Cable et al.	:	DECISION ON PETITION
Application No. 12/187,251	:	TO WITHDRAW
Filed: August 6, 2008	:	FROM RECORD
Attorney Docket No. 9314.0027-01	:	

This is a decision on the Request to Withdraw as attorney or agent of record under 37 C.F.R. § 1.36(b), filed on August 11, 2009.

The request is **NOT APPROVED**.

The Request for Withdrawal as Attorney or Agent and Change of Correspondence Address submitted herein cannot be approved at this time since the Office no longer accepts address changes to a new practitioner or law firm filed with requests under 37 C.F.R. § 1.36(b).

The Office will only accept correspondence address changes to the most current address information provided for the assignee of the entire interest *who properly became of record under 37 CFR 3.71*, or, if no assignee of the entire interest has properly been made of record, the most current address information provided for the first named inventor. 37 CFR 3.71(c) states:

> *An assignee becomes of record either in a national patent application or a reexamination proceeding by filing a statement in compliance with § 3.73(b) that is signed by a party who is authorized to act on behalf of the assignee.*

All future communications from the Office will be directed to above-listed address until otherwise properly notified by the applicant or a proper change of correspondence address have been submitted.

There are no outstanding Office actions that require a reply from the applicant.

Telephone inquires concerning this decision should be directed to the undersigned at (571) 272-6059. All other inquires concerning either the examination or status of the application should be directed to the Technology Center.

A. Kelley

Alicia Kelley
Petitions Examiner
Office of Petitions

UNITED STATES PATENT AND TRADEMARK OFFICE

Commissioner for Patents
United States Patent and Trademark Office
P.O. Box 1450
Alexandria, VA 22313-1450
www.uspto.gov

FINNEGAN, HENDERSON, FARABOW,
GARRETT & DUNNER LLP
901 NEW YORK AVENUE, NW
WASHINGTON DC 20001-4413

COPY MAILED

OCT 2 7 2009

OFFICE OF PETITIONS

In re Application of	:	
Cable et al.	:	DECISION ON PETITION
Application No. 12/187,251	:	TO WITHDRAW
Filed: August 6, 2008	:	FROM RECORD
Attorney Docket No. 9314.0027-01	:	

This is a decision on the renewed Request to Withdraw as attorney or agent of record under 37 C.F.R. § 1.36(b), filed on September 28, 2009.

The request is **NOT APPROVED**.

The Request for Withdrawal as Attorney submitted herein cannot be approved yet again since a change of correspondence address was not submitted. Petitioner should note that the Office will only accept correspondence address changes to the most current address information provided for the assignee of the entire interest *who properly became of record under 37 CFR 3.71,* **or**, if no assignee of the entire interest has properly been made of record, the most current address information provided for the first named inventor. 37 CFR 3.71(c) states:

> *An assignee becomes of record either in a national patent application or a reexamination proceeding by filing a statement in compliance with § 3.73(b) that is signed by a party who is authorized to act on behalf of the assignee.*

All future communications from the Office will be directed to above-listed address until otherwise properly notified by the applicant or a proper change of correspondence address have been submitted.

There are no outstanding Office actions that require a reply from the applicant.

Telephone inquires concerning this decision should be directed to the undersigned at (571) 272-6059. All other inquires concerning either the examination or status of the application should be directed to the Technology Center.

Alicia Kelley
Petitions Examiner
Office of Petitions

UNITED STATES PATENT AND TRADEMARK OFFICE

Commissioner for Patents
United States Patent and Trademark Office
P.O. Box 1450
Alexandria, VA 22313-1450
www.uspto.gov

CARR LLP (IST)
670 FOUNDERS SQUARE
900 JACKSON STREET
DALLAS, TX 75202

COPY MAILED

SEP 03 2009

OFFICE OF PETITIONS

In re Application of	:	
Michael Castro	:	
Application No. 12/187,252	:	DECISION ON PETITION
Filed: August 6, 2008	:	TO WITHDRAW
Attorney Docket No. 11-003-US1 (IST3747001)	:	FROM RECORD
	:	

This is a decision on the Request to Withdraw as attorney or agent of record under 37 C.F.R. § 1.36(b), filed July 7, 2009.

The request is **APPROVED**.

A grantable request to withdraw as attorney/agent of record must be signed by every attorney/agent seeking to withdraw or contain a clear indication that one attorney is signing on behalf of another/others.

The request was signed by George W. Carr on behalf of all attorneys of record who are associated with customer No. 57004. All attorneys/agents associated with the Customer Number 57004 have been withdrawn. Applicant is reminded that there is no attorney of record at this time.

The request to change the correspondence of record is not acceptable as the requested correspondence address is not that of: (1) the first named signing inventor; or (2) an intervening assignee of the entire interest under 37 C.F.R 3.71. All future communications from the Office will be directed to the first named signing inventor at the first copied address below until otherwise properly notified by the applicant.

There are no pending Office actions at the present time.

Telephone inquiries concerning this decision should be directed to undersigned at 571-272-1642.

All other inquiries concerning the examination or status of this application should be directed to the Technology Center.

/AMW/
April M. Wise
Petitions Examiner
Office of Petitions

cc: MICHAEL CASTRO
40 CHARLES AVENUE
UXBRIDGE, MA 01569

cc: ECKERT SEAMANS CHERIN & MELLOTT
600 GRANT STREET
44TH FLOOR
PITTSBURGH, PA 15219

UNITED STATES PATENT AND TRADEMARK OFFICE

UNITED STATES DEPARTMENT OF COMMERCE
United States Patent and Trademark Office
Address: COMMISSIONER FOR PATENTS
P.O. Box 1450
Alexandria, Virginia 22313-1450
www.uspto.gov

APPLICATION NUMBER	FILING OR 371(C) DATE	FIRST NAMED APPLICANT	ATTY. DOCKET NO./TITLE
12/187,252	08/06/2008	Michael Castro	11-003-US1 (IST 3747001)

CONFIRMATION NO. 2668

POWER OF ATTORNEY NOTICE

57004
CARR LLP (IST)
670 FOUNDERS SQUARE
900 JACKSON STREET
DALLAS, TX 75202

OC000000037609255

Date Mailed: 09/01/2009

NOTICE REGARDING CHANGE OF POWER OF ATTORNEY

This is in response to the Power of Attorney filed 07/07/2009.

- The withdrawal as attorney in this application has been accepted. Future correspondence will be mailed to the new address of record. 37 CFR 1.33.

/amwise/

Office of Data Management, Application Assistance Unit (571) 272-4000, or (571) 272-4200, or 1-888-786-0101

UNITED STATES PATENT AND TRADEMARK OFFICE

Commissioner for Patents
United States Patent and Trademark Office
P.O. Box 1450
Alexandria, VA 22313-1450
www.uspto.gov

HOLLAND & HART, LLP
P.O BOX 8749
DENVER CO 80201

COPY MAILED

JAN 0 7 2010

In re Application of	:	
Paul Lambert	:	DECISION ON PETITION
Application No. 12/187,256	:	TO WITHDRAW
Filed: August 6, 2008	:	FROM RECORD
Attorney Docket No. 57876.830001.US1	:	

This is a decision on the Request to Withdraw as attorney or agent of record under 37 C.F.R. § 1.36(b), filed November 18, 2009.

The request is **APPROVED**.

A grantable request to withdraw as attorney/agent of record must be signed by every attorney/agent seeking to withdraw or contain a clear indication that one attorney is signing on behalf of another/others. The Office will require the practitioner(s) to certify that he, she or they have: (1) given reasonable notice to the client, prior to the expiration of the reply period, which the practitioner(s) intends to withdraw from employment; (2) delivered to the client or a duly authorized representative of the client all papers and property (including funds) to which the client is entitled; and (3) notified the client of any replies that may be due and the time frame within which the client must respond, pursuant to 37 CFR 10.40 (c).

The request was signed by Robert C. Ryan on behalf of all attorneys of record who are associated with Customer No. 26582.

All attorneys/agents associated with Customer Number 26582 have been withdrawn. Applicant is reminded that there is no attorney of record at this time.

All future correspondence will be directed to the applicant at the address indicated below.

Currently, there is no outstanding Office action that requires a reply.

Telephone inquires concerning this decision should be directed to the undersigned at (571) 272-7751. All other inquires concerning either the examination or status of the application should be directed to the Technology Center.

Joan Olszewski
Petitions Examiner
Office of Petitions

cc: Paul Lambert
1020 Sunset Lane, Suite 106
El Dorado Hills, CA 95762

UNITED STATES PATENT AND TRADEMARK OFFICE

Commissioner for Patents
United States Patent and Trademark Office
P.O. Box 1450
Alexandria, VA 22313-1450
www.uspto.gov

MAIL

NOV 24 2008

DIRECTOR'S OFFICE
TECHNOLOGY CENTER 2600

BIRCH STEWART KOLASCH & BIRCH
PO BOX 747
FALLS CHURCH VA 22040-0747

In re Application of: BEN CROOK Serial No.: 12/187270 Filed: August 6th 2008 Attorney Docket No.: 4436-0191PUS2 Title: **BEHIND THE EAR HEARING AID PART WITH EXCHANGEABLE COVER**	DECISION ON PETITION TO MAKE SPECIAL FOR NEW APPLICATION UNDER 37 C.F.R. § 1.102 & M.P.E.P. § 708.02

This is a decision on the petition filed on August 6th, 2008 to make the above-identified application special for accelerated examination procedure under 37 C.F.R. § 1.102(d).

The petition to make the application special is **GRANTED**.

The application is eligible for accelerated examination and the petition complies with the conditions for granting the application special status pursuant to the "Change to Practice for Petitions in Patent Applications to Make Special and for Accelerated Examination" published June 26, 2006, in the Federal Register. (71 Fed. Reg. 36323).

The prosecution of the instant application will be conducted expeditiously according to the following guidelines.

1. The application will be docketed to an examiner and taken up for action within two weeks of the date of this decision.

2. Restriction Practice:
   If the examiner determines that the claims are not directed to a single invention, a telephone request to elect one single invention will be made pursuant to MPEP 812.01. As a prerequisite to the grant of this petition, the applicant has agreed to make an oral election, by telephone, without traverse. If the applicant refuses to make an election without traverse, or the examiner cannot reach the applicant after a reasonable effort, the examiner will treat the first claimed invention (invention defined by claim 1) as having being constructively elected without traverse for examination.

3. Office action:

If it is determined that, after appropriate consultation, there is a potential rejection or any other issue to be addressed, the examiner will telephone the applicant and arrange an interview to discuss and resolve the issue. An Office action, other than a Notice of Allowance and Fee(s) Due (Notice of Allowance), will not be issued unless either: 1) an interview was conducted but did not result in agreed to action that places the application in condition for allowance, or, 2) a determination is made that an interview would be unlikely to result in the application being placed in condition for allowance, and 3) an internal conference has been held to review any rejection of any claim.

4. Time for Reply:
An Office action other than a Notice of Allowance or a final Office action will set a shortened statutory period of one month or thirty days, whichever is longer, for reply with no extension of time available under 37 CFR 1.136(a). Failure to timely file a reply within this non-extendible period for reply will result in the abandonment of the application.

5. Reply by Applicant:
A timely reply to an Office action other than the Notice of Allowance must be submitted electronically via EFS or EFS-web and limited to addressing the rejections, objections and requirement made. Any amendment that attempts to: 1) add claims which would result in more than three pending independent claims or more than twenty pending total claims; 2) present claims not encompassed by the pre-examination search or an updated accelerated examination support document; or 3) present claims that are directed a non-elected invention or an invention other than that previously claimed and examined in the application, will be treated as not fully responsive and will not be entered.

   For any amendment to the claims (including any new claim) that is not encompassed by the accelerated examination support document, applicant must provide an updated accelerated examination support document that encompasses the amended or new claims at the time of filing of the amendment.

   To proceed expeditiously with the examination, it is recommended that a reply with amendments made to any claim or with any new claim being added be accompanied by an updated accelerated examination support document or a statement explaining how the amended or new claim is supported by the original accelerated examination support document.

6. Information Disclosure Statement (IDS):
Any IDS filed during prosecution must be submitted electronically via EFS or EFS-web, accompanied by an updated accelerated examination support document, and be in compliance with 37 CFR 1.97 and 1.98.

7. Post-Allowance Processing:
To expedite processing of the allowed application into a patent, the applicant must: 1) pay the required fees within one month of the date of the Notice of Allowance, and 2) not file any post allowance papers not required by the Office. In no event may the issue fee be paid and accepted later than three months from the date of the Notice of Allowance.

8. After-Final and Appeal Procedures:
   To expedite prosecution, after receiving the final Office action, applicant must: 1) promptly file a notice of appeal, an appeal brief and appeal fees; and 2) not request a pre-appeal brief conference.

   Any amendment, affidavit or other evidence filed after final Office action must comply with applicable rules and the requirements outlined in numbered paragraphs 5 and 6 above.

   On appeal, the application will proceed according to normal appeal procedures. After appeal, the application will again be treated special.

9. Proceedings Outside the Normal Examination Process:
   If the application becomes involved in a proceeding that is outside the normal examination process (e.g., a secrecy order, national security review, interference proceeding, petitions under 37 CFR 1.181, 182 or 183), the application will be treated special before and after such proceeding.

10. Final Disposition:
    The twelve month goal of this accelerated examination procedure ends with a final disposition. The mailing of a final Office action, a Notice of Allowance, the filing of a Notice of Appeal, or the filing of a Request for Continued Examination (RCE) is the final disposition.

If, during prosecution, a paper is not filed electronically using EFS-web, a reply is filed but is not fully responsive, the application is involved in an appeal, or a proceeding outside normal examination process, the application will still be examined expeditiously, however, the final disposition may occur more than twelve months from the filing of the application.

Any inquiry regarding this decision should be directed to Michael Horabik, Quality Assurance Specialist, at (571) 272-3068.

/Michael Horabik/

Michael Horabik
Quality Assurance Specialist
Technology Center 2600

UNITED STATES PATENT AND TRADEMARK OFFICE

UNITED STATES DEPARTMENT OF COMMERCE
United States Patent and Trademark Office
Address: COMMISSIONER FOR PATENTS
P.O. Box 1450
Alexandria, Virginia 22313-1450
www.uspto.gov

ORRICK, HERRINGTON & SUTCLIFFE, LLP
IP PROSECUTION DEPARTMENT
4 PARK PLAZA
SUITE 1600
IRVINE, CA 92614-2558

Mail Date: 04/21/2010

Applicant	: Thomas D. Tyler	: DECISION ON REQUEST FOR
Patent Number	: 7628809	: RECALCULATION of PATENT
Issue Date	: 12/08/2009	: TERM ADJUSTMENT IN VIEW
Appliction No	: 12/187,281	: OF WYETH AND NOTICE OF INTENT TO
Filed	: 08/06/2008	: ISSUE CERTIFICATE OF CORRECTION
		:

The Request for Recalculation is **GRANTED** to the extent indicated.

The patent term adjustment has been determined to be **0** days. The USPTO will *sua sponte* issue a certificate of correction reflecting the amount of PTA days determined by the recalculation.

Prior to the issuance of the certificate of correction, the USPTO will afford patentee an opportunity to be heard and request reconsideration. Accordingly, patentee has **one month or thirty (30) days**, whichever is longer, to file a request for reconsideration of this patent term adjustment calculation. See 35 U.S.C. 154(b)(3)(B)(ii) and 37 CFR 1.322(a)(4). No extensions of time will be granted under 37 CFR 1.136.

Patentee should use document code PET.OP if electronically filing a request for reconsideration of this patent term adjustment calculation. The patentee must also include the information required by 37 CFR 1.705(b)(2) and the fee required by 37 CFR 1.18(e). If patentee does not file a timely request for reconsideration of this patent term adjustment calculation including the information required by 37 CFR 1.705(b)(2) and the fee required by 37 CFR 1.18(e), the USPTO will issue a certificate of correction reflecting the PTA determination noted above.

Patentee should be aware that in order to preserve the right to review in the United States District Court for the District of Columbia of the USPTO patent term adjustment determination, patentee must ensure that he or she also take the steps required under 35 U.S.C. 154(b)(4)(A) in a timely manner. Nothing in the request for recalculation should be construed as providing an alternative time frame for commencing a civil action under 35 U.S.C. 154(b)(4)(A).

Any questions concerning this decision should be directed to the Office of Patent Legal Administration at 571-272-7702.

UNITED STATES PATENT AND TRADEMARK OFFICE

UNITED STATES DEPARTMENT OF COMMERCE
United States Patent and Trademark Office
Address: COMMISSIONER FOR PATENTS
P.O. Box 1450
Alexandria, Virginia 22313-1450
www.uspto.gov

APPLICATION NO.	FILING DATE	FIRST NAMED INVENTOR	ATTORNEY DOCKET NO.	CONFIRMATION NO.
12/187,285	08/06/2008	Hiroshi Okamoto	SAEG190.001DV1	2731

20995 7590 02/03/2009
KNOBBE MARTENS OLSON & BEAR LLP
2040 MAIN STREET
FOURTEENTH FLOOR
IRVINE, CA 92614

EXAMINER
SMITH, JENNIFER A

ART UNIT	PAPER NUMBER
1793	

NOTIFICATION DATE	DELIVERY MODE
02/03/2009	ELECTRONIC

Please find below and/or attached an Office communication concerning this application or proceeding.

The time period for reply, if any, is set in the attached communication.

Notice of the Office communication was sent electronically on above-indicated "Notification Date" to the following e-mail address(es):

jcartee@kmob.com
eOAPilot@kmob.com

UNITED STATES PATENT AND TRADEMARK OFFICE

Commissioner for Patents
United States Patent and Trademark Office
P.O. Box 1450
Alexandria, VA 22313-1450
www.uspto.gov

Date Mailed: February 3, 2009

KNOBBE MARTENS OLSON & BEAR LLP
2040 MAIN STREET
FOURTEENTH FLOOR
IRVINE CA 92614

Applicant: Okamoto
Appl. No.: 12/187,285
Filing Date: August 6, 2008
Title: ZIRCONIA POROUS BODY AND MANUFACTURING METHOD THEREOF
Attorney Docket No.: SAEG190.001DV1
Pub. No.: US 2008/0312075 A1
Pub. Date: December 18, 2008

This is a decision on the request for republication of patent application publication under 37 CFR 1.221(a), filed on January 16, 2009, for the above-identified application.

The request under 37 CFR 1.221(a) is DISMISSED.

37 CFR 1.221(a) requires "a copy of the application in compliance with the Office electronic filing system requirements and be accompanied by the publication fee set forth in § 1.18(d) and the processing fee set forth in § 1.17(i)". If the request for republication does not comply with the electronic filing system requirements, the republication will not take place and the publication fee set forth in § 1.18(d) will be refunded. The processing fee will be retained.

The applicant did not supply a copy of the application in compliance with the Office electronic filing system, as required by 37 CFR 1.221(a) because **the Applicant submitted the papers as a "Document for an existing application", which are entered into the application file, and not as a "Pre-Grant Publication" submission**. The request for republication does not comply with the electronic filing system requirements, thus republication will not take place.

Any request for republication under 37 CFR 1.221(a), must be submitted via the EFS system, **as a Pre-Grant publication submission.** The applicant is directed to the following website for additional instructions on how to submit a Pre-Grant Publication submission via the electronic filing system:

http://www.uspto.gov/ebc/portal/efs/pgpub_quickstart.pdf

Any questions or requests for reconsideration of the decision should be addressed as follows:

By mail to: Mail Stop PGPUB
Commissioner for Patents
P.O. Box 1450
Alexandria, Va. 22313-1450

By facsimile: 571-273-8300

Telephone inquiries regarding this correspondence should be directed to The Office of Data Management at 571-272-4200.

Tammy J. Koontz
Program & Management Analyst
Office of Data Management

```
Adjustment date: 02/03/2009  KKING1
01/21/2009 INTEFSW  00001189 12187285
01 FC:1504                    -300.00 DP
```

```
Refund Ref:
02/03/2009          0030066251
----------------------------------------

Credit Card Refund Total:      $300.00

Master C: XXXXXXXXXXXX5583
```

UNITED STATES PATENT AND TRADEMARK OFFICE

UNITED STATES DEPARTMENT OF COMMERCE
United States Patent and Trademark Office
Address: COMMISSIONER FOR PATENTS
P.O. Box 1450
Alexandria, Virginia 22313-1450
www.uspto.gov

APPLICATION NO.	FILING DATE	FIRST NAMED INVENTOR	ATTORNEY DOCKET NO.	CONFIRMATION NO.
12/187,306	08/06/2008	RICHARD BRADLEY BOULDIN	CA920080067US1	2770

79452 7590 11/04/2008
Shimokaji & Associates, P.C.
8911 Research Drive
Irvine, CA 92618

EXAMINER

ART UNIT	PAPER NUMBER
3623	

MAIL DATE	DELIVERY MODE
11/04/2008	PAPER

Please find below and/or attached an Office communication concerning this application or proceeding.

The time period for reply, if any, is set in the attached communication.

UNITED STATES PATENT AND TRADEMARK OFFICE

Commissioner for Patents
United States Patent and Trademark Office
P.O. Box 1450
Alexandria, VA 22313-1450
www.uspto.gov

Shimokaji & Associates, P.C.
8911 Research Drive
Irvine CA 92618

In re Application of:
Richard Bradley Bouldin
Serial No.: 12/187306
Filed: August 6, 2008
Docket: CA920080067US1

Title: PHASE DRIVEN MODELING SERVICES

DECISION ON PETITION TO MAKE SPECIAL FOR NEW APPLICATION UNDER 37 C.F.R. § 1.102 & M.P.E.P. § 708.02

This is a decision on the petition filed on August 6, 2008 to make the above-identified application special for accelerated examination procedure under 37 C.F.R. § 1.102(d).

The petition to make the application special is **DENIED**.

REGULATION AND PRACTICE

To be eligible for accelerated examination under 37 C.F.R. § 1.102(d) and pursuant to the "Change to Practice for Petitions in Patent Applications to Make Special and for Accelerated Examination" published in the Federal Register on June 26, 2006 (71 Fed. Reg. 36323), the following conditions must be satisfied:

1. The application must be a non-reissue utility or design application filed under 37 CFR 1.111(a);
2. The application, the petition and the required fees must be filed electronically using the USPTO's electronic filing system (EFS), or EFS-web; if not filed electronically, a statement asserting that EFS and EFS-web were not available during the normal business hours;
3. The application, at the time of filing, must be complete under 37 CFR 1.51 and in condition for examination;
4. The application must contain three or fewer independent claims and twenty or fewer total claims and the claims must be directed to a single invention;
5. The petition must be filed with the application.

The application as filed is not eligible for the accelerated examination under 37 C.F.R. § 1.102(d) because it is a utility application filed under 37 CFR 1.111(a) and was not complete.

UNITED STATES PATENT AND TRADEMARK OFFICE

Commissioner for Patents
United States Patent and Trademark Office
P.O. Box 1450
Alexandria, VA 22313-1450
www.uspto.gov

Snell & Wilmer L.L.P. (IBM Corp)
600 Anton Blvd
Suite 1400
Costa Mesa CA 92626

COPY MAILED

SEP 26 2008

OFFICE OF PETITIONS

In re Application of :
Levitan et al. :
Application No. 12/187,351 : ON PETITION
Filing Date: August 6, 2008 :
Attorney Docket No.: :
AUS920080425US1 :

This decision is in response to "PETITION REGARDING OMITTED DRAWINGS FIGURE," filed August 20, 2008, to accord the above-identified application a filing date of August 6, 2008 with figure 4 as described in the specification as part of the disclosure of application.

The petition is hereby **DISMISSED**.

Any request for reconsideration should be filed within **TWO MONTHS** of the mailing date of this decision in order to be considered timely. 37 CFR 1.181(f). No extensions of time pursuant to the provisions of 37 CFR 1.136 are permitted. If reconsideration is not requested within the time period specified above, this application will be held abandoned.

The application was filed August 20, 2008. The Notice of Omitted Items in a Nonprovisional Application (Notice) mailed August 14, 2008 by the Office of Initial Patent Examination (OIPE) indicated that the application had been accorded a filing date but that figure 4 as described in the specification appeared to be omitted from the application as filed.

The Notice gave applicants the opportunity to: one, petition for a date of deposit by establishing that the omitted item was deposited in the U.S. Patent and Trademark Office (USPTO) with the nonprovisional application papers; two, petition for later filing date by submitting the omitted item and accepting the date that the item was filed in the USPTO as the filing date of the application; three, accept as the application filing date the application as deposited without the omitted item as part of

the application; or, four, accept the application as deposited, but to add the subject matter in the omitted item (e.g., a missing page or figure) by relying on an incorporation by reference under 37 CFR 1.57.

In this case, petitioners neither assert that the missing pages were actually deposited in the PTO on August 6, 2008, with the other application papers nor request a later filing date.

Instead, applicants seek to add the figures as described in the specification to the present application on the basis that the figures are not new matter.

Accordingly, petitioners have failed to establish that the application is entitled to a filing date of August 6, 2008 with figure 4 as part of the original disclosure.

Accordingly, the petition is **DISMISSED** to the extent that it requests a filing date of August 6, 2006 with figure 4 considered part of the original application disclosure.

Figures 4 submitted on August 20, 2008 will not be entered.

It is further noted that petitioner has failed to meet the requirements of the Notice of Omitted Items. It appears that petitioner seeks to accept the application as filed, as petitioner has not provided evidence that figure 4 was present on filing. Nor does petitioner seek a later filing date. To the extent petitioner seeks to accept the application as filed pursuant to option III, petitioner must meet the requirements of III (a)(2).

The petition fee submitted herewith will not be refunded as the petition was not necessitated due to Office error.

Further correspondence with respect to this matter should be addressed as follows:

By Mail: Mail Stop PETITION
Commissioner for Patents
P. O. Box 1450
Alexandria, VA 22313-1450

By hand: U. S. Patent and Trademark Office
Customer Service Window, Mail Stop Petitions
Randolph Building
401 Dulany Street

Alexandria, VA 22314

By facsimile: **(571) 273-8300**

Telephone inquiries regarding this decision should be directed to the undersigned at (571) 272-3215.

Charlema Grant

Charlema Grant
Petitions Attorney
Office of Petitions

UNITED STATES PATENT AND TRADEMARK OFFICE

UNITED STATES DEPARTMENT OF COMMERCE
United States Patent and Trademark Office
Address: COMMISSIONER FOR PATENTS
P.O. Box 1450
Alexandria, Virginia 22313-1450
www.uspto.gov

APPLICATION NO.	FILING DATE	FIRST NAMED INVENTOR	ATTORNEY DOCKET NO.	CONFIRMATION NO.
12/187,351	08/06/2008	David Stephen Levitan	AUS920080425US1	2856

80692 7590 11/03/2008
Snell & Wilmer L.L.P. (IBM Corp)
600 Anton Blvd
Suite 1400
Costa Mesa, CA 92626

EXAMINER	
ART UNIT	PAPER NUMBER
2192	

MAIL DATE	DELIVERY MODE
11/03/2008	PAPER

Please find below and/or attached an Office communication concerning this application or proceeding.

The time period for reply, if any, is set in the attached communication.

UNITED STATES PATENT AND TRADEMARK OFFICE

Commissioner for Patents
United States Patent and Trademark Office
P.O. Box 1450
Alexandria, VA 22313-1450
www.uspto.gov

Snell & Wilmer L.L.P. (IBM Corp)
600 Anton Blvd
Suite 1400
Costa Mesa CA 92626

In re Application of:
David Stephen Levitan
Serial No.: 12/187351
Filed: August 6, 2008
Docket: AUS920080425US1

Title: METHOD AND APPARATUS TO IMPLEMENT SOFTWARE TO HARDWARE THREAD PRIORITY

DECISION ON PETITION TO MAKE SPECIAL FOR NEW APPLICATION UNDER 37 C.F.R. § 1.102 & M.P.E.P. § 708.02

This is a decision on the petition filed on August 6, 2008 to make the above-identified application special for accelerated examination procedure under 37 C.F.R. § 1.102(d).

The petition to make the application special is **DENIED**.

REGULATION AND PRACTICE

To be eligible for accelerated examination under 37 C.F.R. § 1.102(d) and pursuant to the "Change to Practice for Petitions in Patent Applications to Make Special and for Accelerated Examination" published in the Federal Register on June 26, 2006 (71 Fed. Reg. 36323), the following conditions must be satisfied:

1. The application must be a non-reissue utility or design application filed under 37 CFR 1.111(a);
2. The application, the petition and the required fees must be filed electronically using the USPTO's electronic filing system (EFS), or EFS-web; if not filed electronically, a statement asserting that EFS and EFS-web were not available during the normal business hours;
3. The application, at the time of filing, must be complete under 37 CFR 1.51 and in condition for examination;
4. The application must contain three or fewer independent claims and twenty or fewer total claims and the claims must be directed to a single invention;
5. The petition must be filed with the application.

The application as filed is not eligible for the accelerated examination under 37 C.F.R. § 1.102(d) because it is a utility application filed under 37 CFR 1.111(a) and was not complete. The Notice of Omitted Items Application August 14, 2008 is evidence that the application was not complete and in condition for examination at the time of filing.

For the above-stated reasons, the petition is denied. The application will therefore be taken up by the examiner for action in its regular turn.

Any inquiry regarding this decision should be directed to the undersigned at (571) 272-3719. If attempts to reach the undersigned are unsuccessful, Mano Padmanabhan., Quality Assurance Specialist can be reached at (571) 272-4210.

/Kakali Chaki/

Kakali Chaki, Quality Assurance Specialist

Technology Center 2100

UNITED STATES PATENT AND TRADEMARK OFFICE

Commissioner for Patents
United States Patent and Trademark Office
P.O. Box 1450
Alexandria, VA 22313-1450
www.uspto.gov

Snell & Wilmer L.L.P. (IBM Corp)
600 Anton Blvd
Suite 1400
Costa Mesa CA 92626

COPY MAILED

DEC 15 2008

OFFICE OF PETITIONS

In re Application of	:	
Levitan et al.	:	
Application No. 12/187,351	:	ON PETITION
Filing Date: August 6, 2008	:	
Attorney Docket No.:	:	
AUS920080425US1	:	

This decision is in response to a renewed petition filed November 19, 2008, to accord the above-identified application a filing date of August 22, 2008 with figure 4 as described in the specification as part of the disclosure of application.

The petition is hereby **Granted.**

The application was filed August 20, 2008. The Notice of Omitted Items in a Nonprovisional Application (Notice) mailed August 14, 2008 by the Office of Initial Patent Examination (OIPE) indicated that the application had been accorded a filing date but that figure 4 as described in the specification appeared to be omitted from the application as filed.

The Notice gave applicants the opportunity to: one, petition for a date of deposit by establishing that the omitted item was deposited in the U.S. Patent and Trademark Office (USPTO) with the nonprovisional application papers; two, petition for later filing date by submitting the omitted item and accepting the date that the item was filed in the USPTO as the filing date of the application; three, accept as the application filing date the application as deposited without the omitted item as part of the application; or, four, accept the application as deposited, but to add the subject matter in the omitted item (e.g., a missing page or figure) by relying on an incorporation by reference under 37 CFR 1.57. A petition filed under 37 CFR 1.53 was dismissed on September 26, 2008.

Pursuant to 35 U.S.C.111(a)(4)the filing date of an application shall be the date on which the specification and any required drawing are received in the Patent and Trademark Office.

Applicant seeks to add figure 4 submitted August 22, 2008 and accept the later filing date. Applicants have included a supplemental declaration.

Accordingly, the petition requesting the later filing date of **August 22, 2008** is **GRANTED**.

Pursuant to this decision, the application will be referred to Office of Patent Application Processing for:

- **correction of the filing date to August 22, 2008**;
- **for indication in Office records, as appropriate, that "4" sheets of drawings were present on filing** and
- **for issuance of a filing receipt.**

Telephone inquiries regarding this decision should be directed to the undersigned at (571) 272-3215.

Charlema Grant
Petitions Attorney
Office of Petitions

UNITED STATES PATENT AND TRADEMARK OFFICE

Commissioner for Patents
United States Patent and Trademark Office
P.O. Box 1450
Alexandria, VA 22313-1450
www.uspto.gov

NORTH AMERICA INTELLECTUAL PROPERTY CORPORATION
P.O. BOX 506
MERRIFIELD VA 22116

MAILED

JAN 28 2010

OFFICE OF PETITIONS

In re Application of
Chia-Ching Tsai
Application No. 12/187,385
Filed: August 7, 2008
Attorney Docket No. **WISP0193USA**

DECISION ON PETITION
UNDER § 1.183

This is a decision on the petition, filed October 6, 2009 under 37 CFR § 1.183 for acceptance of a supplemental declaration without the inclusion of the signatures of the inventor as required by §§ 37 CFR 1.67 and 1.63.[1]

The petition is **GRANTED**.

The sole inventor, signed the original declaration for patent filed in this application, pursuant to § 1.63(d), However, a substitute declaration is required to cure a defect in the original declaration.

Petitioners assert that sole inventor Chia-Ching Tsai refuses to execute the supplemental declaration. The evidence provided shows that the supplemental declaration was sent to Mr. Tsai but that he has not to date returned an executed copy of the substitute declaration. Thus the evidence is found to be adequate to waive the requirement for inventor Tsai's signature on the supplemental declaration.

The petition includes the last known address of the non-signing inventor and a fee in the amount of $400.00 for the petition.

The supplemental declaration has been reviewed and found in compliance with §§ 1.67 and 1.63. In view of the foregoing, it is concluded that waiver of the requirement that the supplemental declaration be signed by sole inventor Farmer is appropriate.

This matter is being referred to Technology Center 2165 for examination in due course.

Telephone inquiries concerning this matter may be directed to the undersigned Petitions Attorney at (571) 272-3212.

Patricia Faison-Ball

Patricia Faison-Ball
Senior Petitions Attorney
Office of Petitions

[1] See MPEP 603.

UNITED STATES PATENT AND TRADEMARK OFFICE

UNITED STATES DEPARTMENT OF COMMERCE
United States Patent and Trademark Office
Address: COMMISSIONER FOR PATENTS
P.O. Box 1450
Alexandria, Virginia 22313-1450
www.uspto.gov

APPLICATION NO.	FILING DATE	FIRST NAMED INVENTOR	ATTORNEY DOCKET NO.	CONFIRMATION NO.
12/187,432	08/07/2008	Glen H. Handlogten	ROC920080008US2	3011

59452 7590 03/09/2009
CANTOR COLBURN LLP - IBM ROCHESTER DIVISION
20 Church Street
22nd Floor
Hartford, CT 06103

EXAMINER
BULLOCK JR, LEWIS ALEXANDER

ART UNIT	PAPER NUMBER
2193	

NOTIFICATION DATE	DELIVERY MODE
03/09/2009	ELECTRONIC

Please find below and/or attached an Office communication concerning this application or proceeding.

The time period for reply, if any, is set in the attached communication.

Notice of the Office communication was sent electronically on above-indicated "Notification Date" to the following e-mail address(es):

usptopatentmail@cantorcolburn.com

UNITED STATES PATENT AND TRADEMARK OFFICE

Commissioner for Patents
United States Patent and Trademark Office
P.O. Box 1450
Alexandria, VA 22313-1450
www.uspto.gov

CANTOR COLBURN LLP - IBM ROCHESTER DIVISION
20 Church Street
22nd Floor
Hartford CT 06103

March 3, 2009

In re Application of:
HANDLOGTEN, GLEN H.
Serial No.: 12/187,432
Filed: August 7, 2008
Docket: ROC920080008US2
Title: SYSTEMS, METHODS AND COMPUTER PROGRAM PRODUCTS FOR HARDWARE ASSISTS FOR MICROCODED FLOATING POINT DIVIDE AND SQUARE ROOT

DECISION ON PETITION TO MAKE SPECIAL FOR NEW APPLICATION UNDER 37 C.F.R. § 1.102 & M.P.E.P. § 708.02

This is a decision on the petition filed on August 7, 2008 to make the above-identified application special for accelerated examination procedure under 37 C.F.R. § 1.102(d).

The petition to make the application special is **DISMISSED**.

REGULATION AND PRACTICE

A grantable petition to make special under 37 C.F.R. § 1.102(d) and pursuant to the "Change to Practice for Petitions in Patent Applications to Make Special and for Accelerated Examination" published in the Federal Register on June 26, 2006 (71 Fed. Reg. 36323), must satisfy the following conditions:

I. Conditions Regarding the Application:

1. the application must be a non-reissue utility or design application filed under 37 CFR 1.111(a);

2. the application, the petition and the required fees must be filed electronically using the USPTO's electronic filing system (EFS), or EFS-web; if not filed electronically, a statement asserting that EFS and EFS-web were not available during the normal business hours.

3. at the time of filing, the application must be complete under 37 CFR 1.51 and in condition for examination;

4. the application must contain three or fewer independent claims and twenty or fewer total claims and the claims must be directed to a single invention.

II. Conditions Regarding the Petition:

The petition must:

1. be filed with the application;

2. include a statement that applicant agrees not to separately argue the patentability of any dependent claim during any appeal in the application;

3. include a statement that applicant agrees to make an election without traverse in a telephone interview.

4. include a statement that applicant agrees to conduct such an interview when requested by the examiner.

5. include a statement, made based on a good faith belief, that a preexamination search in compliance with the following requirements, was conducted, including an identification of the filed of search by United States class and subclass, where applicable, and for database searches, the search logic or chemical structure or sequence used as a query, the name of the file(s) searched and the database service, and the date of the search.

The preexamination search must:

5.1 involve U.S. patents and patent application publications, foreign patent documents, and non-patent literature, unless the applicant can justify with reasonable certainty that no references more pertinent than those already identified are likely to be found in the eliminated sources and includes such a justification with this statement;

5.2. be directed to the claimed invention and encompass all of the features of the claims, giving the claims the broadest reasonable interpretation;

5.3. encompass the disclosed features that may be claimed.

6. must provide in support of the petition an accelerated examination support document. An accelerated examination support document must include:

6.1. an information disclosure statement (IDS) in compliance with 37 CFR 1.98 citing each reference deemed most closely related to the subject matter of each of the claims;

6.2. an identification of all the limitations in the claims that are disclosed by the reference specifying where the limitation is disclosed in the cited reference;

6.3. a detailed explanation of how each of the claims is patentable over the references cited with particularity required by 37 CFR 1.111(b) and (c);

6.4. a concise statement of the utility of the invention as defined in each of the independent claims (unless the application is a design application);

6.5. a showing of where each limitation of the claims finds support under 35 USC 112, first paragraph, in the written description of the specification. If applicable, the showing must also identify: (1) each means- (or step) plus-function claim element that invokes consideration under 35 USC 112, sixth paragraph; and (2) the structure, material, or acts in the specification that corresponds to each means- (or step) plus-function claim element that invokes consideration under 35 USC 112, sixth paragraph; if the application claims the benefit of one or more applications under title 35, United States Code, the showing must also include where each limitation of the claims finds support under 35 USC 112, first paragraph, in each such application in which such supports exists;

6.6. an identification of any cited references that may be disqualified under 35 USC 103(c).

REVIEW OF FACTS

The conditions I.1 – I.4, II.5.3, II.6.1, II.6.2, II.6.4, and II.6.6 above are considered to have been met. However, the petition fails to comply with conditions II.5.1, II.5.2, II.6.3, and II.6.5 above. Therefore, the petition fails to meet the required conditions to be accorded special status under the accelerated examination procedure.

Regarding the requirement of MPEP § 708.02(a)(I.)(I)(2) and item 5.1 above, the preexamination search should identify the field of search by U.S. class and subclass. Petitioner has listed classes 708/205, 295, 496, 500, 504, 508; 712/208, 222 under the U.S. field of search, however, it is not clear whether a complete classification search of each class and subclass was conducted or if the search for these classes was limited by any text query or a set of text queries as it appears in the Database Search section of the preexamination search document on page 2. It is noted that listing only class/subclasses searched will be taken a s representation by the petitioner that each of the patent documents classified under each class/subclass listed in section 8(A) was reviewed in its entirely for subject matter relevant to the claimed invention. Petitioner is requested to provide clarification as to whether a limited classification search was conducted, and if so, clearly indicate the limitation in the preexamination search statement by using an appropriate annotation after the class and subclass, for example, 708/205 (text search only – see search logic).

Regarding the requirement of MPEP § 708.02(a)(I.)(H) and items II.5.2 above, the preexamination search does not encompass all of the features of the claims.

Some of the search queries for the PATBASE database are limited to specific class and subclass combinations. The Petitioner should search the queries without limiting them to a specific class and subclass to ensure a complete text search is performed. Further, several of the queries are limited to the text of the title, abstract, and claims of the document. The Petitioner should include the entire text of the patents when conducting the search to ensure a complete text search is performed.

Based upon the claimed subject matter of the instant application, a search in the following class and subclasses is recommended in order to provide full coverage of where the most pertinent references are most likely to be found: Class 708/521 (pipeline) for subject matter relating to the pipeline architecture; Class 712/211 (Decoding instruction to generate an address of a microroutine) for subject matter related to the microcodes; 712/219 (Reducing an impact of a stall or pipeline bubble) for subject matter relating to the pipeline architecture; 712/221 (Arithmetic operation instruction processing) for subject matter related to the processing of a divisor, NaN, and square root; 712/223 (Logic operation instruction processing) for subject matter related to the processing of a divisor, NaN, and square root; 712/E9.045 (Concurrent instruction execution, e.g., pipeline, look ahead (EPO)) for subject matter related to the pipelining; Class 711/154 (Control Technique); 711/155(Read-modify-write); 711/169 (Memory access pipelining) for subject matter related to the pipeline architecture; 711/215 (In response to microinstruction) for subject matter related to the microcodes and microprograms.

With respect to the database searches, the claim limitations some of which have been identified as patentable features distinguishing the claimed invention from the cited prior art (such as "for a 6-cycle period after receiving the microcoded instruction in the pipeline, performing in the instruction's pipeline slot of the pipeline", "writing the pre-normalized operand to a scratch register coupled to the processor; in response to an operand being a normalized number, copying the operand into the scratch register; determining whether operands associated with the instruction are a-typical and not dealt with by the streamlined microcode routine", and "producing a final result and copying the result from the scratch register to a floating point architectural register associated with the processor" as recited in claim 1) or any search terms covering these limitations do not appear to have been included in the search. Petitioner should review all claim limitations, especially those asserted as patentable distinctions from the cited references to ensure that the search covers these concepts, and update the search and/or provide any clarifications if deemed necessary.

With respect to the search logic identified, and in particular with respect to the instant claim, the text search appears to be incomplete. It is recommended that the following search terms be included in an updated search. Such example search terms (shown below) should be searched in singular or in combination:

pipelin$3 and ((exception error) with (operation operand$1 result$1))

((operand$1 result$1) with ((pre post de)$3normaliz$5)) and pipeline$3

pipelin$3 and ((microcode microinstruction microprogram microroutine) with instruction) and ((division divisor divid$3) ("square root" sqrt) (floating-point$1) NaN)

((flush$3 branch$3 stall$3) with instructions) and pipelin$3

(micro with (code instruction program routine)) and pipelin$3

The default proximity operator is OR, the other proximity operators used in EAST are: "adj", "near", "with", and "same".

Note that the above list of terms and synonyms are not meant to be an exhaustive list, merely an example of various terms and synonyms that can be used to produce a more comprehensive prior art search. Nor should these examples be limited only to those sets of search terms provided. Each search term used should be evaluated for applicable synonyms.

The additional search recommendations were confirmed with and recommended by a (primary) examiner in the pertinent art area.

The petitioner should review the Detailed Explanation of Patentability section in view of any updated search and/or clarifications and provide clarifications, as necessary, to ensure compliance with the requirement of MPEP §708.02(a)(I.)(I)(3) and item 6.3 above.

Finally, with respect to the requirement of MPEP § 708.02(a)(I.)(I)(3) and item 6.3 above, 37 CFR § 1.111 (c) states in part "the applicant or patent owner must clearly point out the patentable novelty which he or she thinks the claims present in view of the state of the art disclosed by the references cited." Specifically, in section 9C, the Petitioner states the cited references fail to teach *determining whether operands associated with the instruction are de-normalized; in response to a determination that an operand associated with the microcode routine is de-normalized, pre-normalizing the operand*; however, in section 9B, the Petitioner indicates these features are taught by Gupta. Therefore, it is not clear if the limitations, *determining whether operands associated with the instruction are de-normalized; in response to a determination that an operand associated with the microcode routine is de-normalized, pre-normalizing the operand* are taught by Gupta or not taught by Gupta. Correction is required.

Finally, with respect to the requirement of MPEP § 708.02(a)(I.)(I)(5) and item 6.5 above, if the application claims the benefit of one or more applications under title 35, United States Code, the showing must also include where each limitation of the claims finds support under 35 USC 112, first paragraph, in each such application in which such supports exists. Since the application claims priority to 12/059,055, the Petitioner must show support for each limitation of the claims in the 12/059,055 application. Correction is required.

For these reasons, the petition does not meet the requirement of MPEP § 708.02(a).

Thus, the petition does not meet the conditions II.5.1, II.5.2, II.6.3, and II.6.5 above.

DECISION

For the above-stated reasons, the petition is **dismissed**. The application will therefore be taken up by the examiner for action in its regular turn.

Petitioner is given a single opportunity to perfect the petition. Any request for reconsideration of this decision must be submitted within 1 (one) month or 30 (thirty) days, whichever is longer, (no extension of time under 37 CFR 1.136(a)) from the date of this decision in order to be considered timely. Any request for reconsideration must address the deficiencies indicated above.

Petitioner is reminded that, upon granting of the special status of the application on request for reconsideration, the application will be processed expeditiously. However, due to the dismissal of the instant petition, examination may not be completed within twelve months of the filing date of the application.

Any inquiry regarding this decision should be directed to the undersigned at (571) 272-3591.

/Gail Hayes/
Gail Hayes, Quality Assurance Specialist
Technology Center 2100

UNITED STATES PATENT AND TRADEMARK OFFICE

UNITED STATES DEPARTMENT OF COMMERCE
United States Patent and Trademark Office
Address: COMMISSIONER FOR PATENTS
P.O. Box 1450
Alexandria, Virginia 22313-1450
www.uspto.gov

APPLICATION NO.	FILING DATE	FIRST NAMED INVENTOR	ATTORNEY DOCKET NO.	CONFIRMATION NO.
12/187,432	08/07/2008	Glen H. Handlogten	ROC920080008US2	3011

59452 7590 06/22/2009
CANTOR COLBURN LLP - IBM ROCHESTER DIVISION
20 Church Street
22nd Floor
Hartford, CT 06103

EXAMINER
BULLOCK JR, LEWIS ALEXANDER

ART UNIT	PAPER NUMBER
2193	

NOTIFICATION DATE	DELIVERY MODE
06/22/2009	ELECTRONIC

Please find below and/or attached an Office communication concerning this application or proceeding.

The time period for reply, if any, is set in the attached communication.

Notice of the Office communication was sent electronically on above-indicated "Notification Date" to the following e-mail address(es):

usptopatentmail@cantorcolburn.com

UNITED STATES PATENT AND TRADEMARK OFFICE

Commissioner for Patents
United States Patent and Trademark Office
P.O. Box 1450
Alexandria, VA 22313-1450
www.uspto.gov

6/17/2009

CANTOR COLBURN LLP - IBM ROCHESTER DIVISION
20 CHURCH STREET
22ND FLOOR
HARTFORD, CT 06103

In re Application of: Handlogten
Serial No.: 12/187,432
Filed: August 7, 2008
Docket: **ROC920080008US2**

Title: **SYSTEMS, METHODS AND COMPUTER PROGRAM PRODUCTS FOR HARDWARE ASSISTS FOR MICROCODED FLOATING POINT DIVIDE AND SQUARE ROOT**

DECISION ON PETITION TO MAKE SPECIAL FOR NEW APPLICATION UNDER 37 C.F.R. § 1.102 & M.P.E.P. § 708.02

This is a decision on the renewed petition filed on April 3, 2009 to make the above- identified application special for accelerated examination procedure under 37 C.F.R. § 1.102(d).

The original petition, submitted on August 7, 2008 was dismissed in the decision mailed on March 9, 2009.

The petition to make the application special is **GRANTED**.

The application is eligible for accelerated examination and the petition complies with the conditions for granting the application special status pursuant to the "Change to Practice for Petitions in Patent Applications to Make Special and for Accelerated Examination" published June 26, 2006, in the Federal Register. (71 Fed. Reg. 36323).

The prosecution of the instant application will be conducted expeditiously according to the following guidelines.

1. The application will be docketed to an examiner and taken up for action within two weeks of the date of this decision.

2. Restriction Practice:
   If the examiner determines that the claims are not directed to a single invention, a telephone request to elect one single invention will be made pursuant to MPEP 812.01. As a prerequisite to the grant of this petition, the applicant has agreed to make an oral election, by telephone, without traverse. If the applicant refuses to make an election

without traverse, or the examiner cannot reach the applicant after a reasonable effort, the examiner will treat the first claimed invention (invention defined by claim 1) as having being constructively elected without traverse for examination.

3. Office action:
If it is determined that, after appropriate consultation, there is a potential rejection or any other issue to be addressed, the examiner will telephone the applicant and arrange an interview to discuss and resolve the issue. An Office action, other than a Notice of Allowance and Fee(s) Due (Notice of Allowance), will not be issued unless either: 1) an interview was conducted but did not result in agreed to action that places the application in condition for allowance, or, 2) a determination is made that an interview would be unlikely to result in the application being placed in condition for allowance, and 3) an internal conference has been held to review any rejection of any claim.

4. Time for Reply:
An Office action other than a Notice of Allowance or a final Office action will set a shortened statutory period of one month or thirty days, whichever is longer, for reply with no extension of time available under 37 CFR 1.136(a). Failure to timely file a reply within this non-extendible period for reply will result in the abandonment of the application.

5. Reply by Applicant:
A timely reply to an Office action other than the Notice of Allowance must be submitted electronically via EFS or EFS-web and limited to addressing the rejections, objections and requirement made. Any amendment that attempts to: 1) add claims which would result in more than three pending independent claims or more than twenty pending total claims; 2) present claims not encompassed by the pre-examination search or an updated accelerated examination support document; or 3) present claims that are directed a non-elected invention or an invention other than that previously claimed and examined in the application, will be treated as not fully responsive and will not be entered.

   For any amendment to the claims (including any new claim) that is not encompassed by the accelerated examination support document, applicant must provide an updated accelerated examination support document that encompasses the amended or new claims at the time of filing of the amendment.

   To proceed expeditiously with the examination, it is recommended that a reply with amendments made to any claim or with any new claim being added be accompanied by an updated accelerated examination support document or a statement explaining how the amended or new claim is supported by the original accelerated examination support document.

6. Information Disclosure Statement (IDS):
Any IDS filed during prosecution must be submitted electronically via EFS or EFS-web, accompanied by an updated accelerated examination support document, and be in compliance with 37 CFR 1.97 and 1.98.

7. Post-Allowance Processing:
   To expedite processing of the allowed application into a patent, the applicant must: 1) pay the required fees within one month of the date of the Notice of Allowance, and 2) not file any post allowance papers not required by the Office. In no event may the issue fee be paid and accepted later than three months from the date of the Notice of Allowance.

8. After-Final and Appeal Procedures:
   To expedite prosecution, after receiving the final Office action, applicant must: 1) promptly file a notice of appeal, an appeal brief and appeal fees; and 2) not request a pre-appeal brief conference.

   Any amendment, affidavit or other evidence filed after final Office action must comply with applicable rules and the requirements outlined in numbered paragraphs 5 and 6 above.

   On appeal, the application will proceed according to normal appeal procedures. After appeal, the application will again be treated special.

9. Proceedings Outside the Normal Examination Process:
   If the application becomes involved in a proceeding that is outside the normal examination process (e.g., a secrecy order, national security review, interference proceeding, petitions under 37 CFR 1.181, 182 or 183), the application will be treated special before and after such proceeding.

10. Final Disposition:
    The twelve-month goal of this accelerated examination procedure ends with a final disposition. The mailing of a final Office action, a Notice of Allowance, the filing of a Notice of Appeal, or the filing of a Request for Continued Examination (RCE) is the final disposition.

If, during prosecution, a paper is not filed electronically using EFS-web, a reply is filed but is not fully responsive, the application is involved in an appeal, or a proceeding outside normal examination process, the application will still be examined expeditiously, however, the final disposition may occur more than twelve months from the filing of the application. In addition, Applicant is reminded that due to the dismissal of the previous petition submission, examination may not be completed within twelve months of the filing date of the application.

Any inquiry regarding this decision should be directed to Gail Hayes, Quality Assurance Specialist, at (571) 272-3591. If attempts to reach the undersigned by telephone are unsuccessful, Kakali Chaki, Quality Assurance Specialist, can be reached at (571) 272-3719.

_____/Gail Hayes/_____,_____

WQAS 2110
Technology Center 2100
Computer Architecture, Software and Information Security

UNITED STATES PATENT AND TRADEMARK OFFICE

Commissioner for Patents
United States Patent and Trademark Office
P.O. Box 1450
Alexandria, VA 22313-1450
www.uspto.gov

VIDAS, ARRETT & STEINKRAUS, P.A.
SUITE 400, 6640 SHADY OAK ROAD
EDEN PRAIRIE MN 55344

MAILED

MAY 26 2009

OFFICE OF PETITIONS

In re Application of :
Mickley, Sperry, Webber, Harris, Epstein, and Kim :
Application No. 12/187,439 : DECISION REFUSING STATUS
Filed: August 7, 2008 : UNDER 37 CFR 1.47(a)
Attorney Docket No. **S63.2P-14005-US02** :
For: CATHETER DEVICES FOR MYOCARDIAL INJECTIONS OR OTHER USES

This is a decision on the petition under 37 CFR 1.47(a), filed February 19, 2009.

The petition under 37 CFR 1.47(a) is **dismissed.**

Any request for reconsideration under this decision must be submitted within TWO (2) MONTHS from the mail date of this decision. Extensions of time under 37 CFR 1.136(a) are permitted. Failure to respond will result in the abandonment of this application. Any response should be titled "Request for Reconsideration of Petition Under 37 CFR 1.47(a).

The above-identified application was filed on September 4, 2008, without an executed oath or declaration. Accordingly, a "Notice to File Missing Parts Nonprovisional Application" (the "Notice") was mailed on September 25, 2008, requiring an executed oath or declaration and a surcharge for the late filing of the oath or declaration. The petition under 37 CFR 1.47(a) was filed on February 25, 2009, with a request for an extension of time within the third month.

A grantable petition under 37 CFR 1.47(a) requires:

(1) proof that the non-signing inventor(s) cannot be reached or refuses to sign the oath or declaration after having been presented with the application papers (specification, claims, and drawings);

(2) an acceptable oath or declaration in compliance with 35 U.S.C. §§ 115 and 116;

(3) the petition fee,

(4) a statement of the last known address of the non-signing inventor,

The instant petition lacks item (1) set forth above.

As to item (1), petitioner did not provide sufficient proof that inventor Epstein cannot be located. Although petitioner states that correspondence was sent to the last known address for inventor Epstein, this alone, does not satisfy the diligence requirement of 37 CFR 1.47(a). Section 409.03(d) of the *Manual of Patent Examining Procedure* provides guidance as to what will suffice as sufficient proof that the non-signing inventor cannot be reached as is alleged in the instant petition. This section states, in pertinent part, as follows:

> [w]here inability to find or reach a nonsigning inventor "after diligent effort" is the reason for filing under 37 CFR 1.47, a statement of facts should be submitted that fully describes the exact facts which are relied on to establish that a diligent effort was made.
>
> The statement of facts must be signed, where at all possible, by a person having firsthand knowledge of the facts recited therein. Statements based on hearsay will not normally be accepted. Copies of documentary evidence such as Internet searches, certified mail, return receipts, cover letters of instructions, telegrams, that support a finding that the nonsigning inventor could not be found or reached should be made part of the statement. The steps taken to locate the whereabouts of the nonsigning inventor should be included statement of facts.

Petitioner has demonstrated that a copy of the application papers was sent to inventor Epstein at an address that is defunct. In order to satisfy the diligence requirement, petitioner must provide some evidence of other efforts to locate inventor Epstein according to the guidance provided by MPEP 409.03(d) cited above.

Further correspondence with respect to this matter should be addressed as follows:

By mail: Mail Stop Petitions
Commissioner for Patents
P.O. Box 1450
Alexandria, VA 22313-1450

By FAX: (571) 273-8300
Attn: Office of Petitions

Telephone inquiries concerning this decision should be directed to the undersigned at (571) 272-3222.

Kenya A. McLaughlin
Petitions Attorney
Office of Petitions

UNITED STATES PATENT AND TRADEMARK OFFICE

Commissioner for Patents
United States Patent and Trademark Office
P.O. Box 1450
Alexandria, VA 22313-1450
www.uspto.gov

VIDAS, ARRETT & STEINKRAUS, P.A.
SUITE 400, 6640 SHADY OAK ROAD
EDEN PRAIRIE MN 55344

In re Application of	:
Mickley, Sperry, Webber, Harris, Epstein, and Kim	:
Application No. 12/187,439	: DECISION NOTING
Filed: August 7, 2008	: JOINDER
Attorney Docket No. **S63.2P-14005-US02**	:
For: CATHETER DEVICES FOR MYOCARDIAL INJECTIONS OR OTHER USES	

MAILED
SEP 14 2009
OFFICE OF PETITIONS

This is in response to the correspondence filed July 27, 2009, noting the joinder of inventor Epstein in the above-cited application.

In view of the joinder of the inventor, further consideration under 37 CFR 1.47(a) is not necessary. This application does not have any Rule 1.47(a) status and no such status should appear on the file wrapper. This application need not be returned to this Office for further consideration under 37 CFR 1.47(a).

The Manual of Patent Examining Procedure ("MPEP"), § 409.03(j) provides that "[i]n the event the previously non-signing inventor decides to join the application by filing an executed oath or declaration complying with 37 CFR 1.63, the oath or declaration will be placed in the application file."

Accordingly, the declaration executed by the joint inventors is noted and made of record.

This application is being directed to Technology Center, GAU 3767 for further processing.

Telephone inquiries regarding this decision should be directed to the undersigned at (571) 272-3222.

Kenya A. McLaughlin
Petitions Attorney
Office of Petitions

UNITED STATES PATENT AND TRADEMARK OFFICE

UNITED STATES DEPARTMENT OF COMMERCE
United States Patent and Trademark Office
Address: COMMISSIONER FOR PATENTS
P.O. Box 1450
Alexandria, Virginia 22313-1450
www.uspto.gov

APPLICATION NO.	FILING DATE	FIRST NAMED INVENTOR	ATTORNEY DOCKET NO.	CONFIRMATION NO.
12/187,452	08/07/2008	Noriko OH-HORI	90606.334/ok	3054

EXAMINER

7590 09/15/2009
YAMAHA HATSUDOKI KABUSHIKI KAISHA
C/O KEATING & BENNETT, LLP
1800 Alexander Bell Drive
SUITE 200
Reston, VA 20191

ART UNIT	PAPER NUMBER
3748	

NOTIFICATION DATE	DELIVERY MODE
09/15/2009	ELECTRONIC

DECISION GRANTING PETITION UNDER 37 CFR 1.138(d)

The declaration of express abandonment is recognized

This is in response to the petition under 37 CFR 1.138(d), requesting for a refund of any previously paid search fee and excess claims fee in the above-identified application.

The petition is granted.

The express abandonment is recognized. Any previously paid search fee and excess claims fee are hereby refunded.

Telephone inquiries should be directed to the Office of Data Management at (571) 272-4200.

Nimi Farmer

Patent Publication Branch
Office of Data Management

Refund Ref:
09/14/2009 0030074351

Credit Card Refund Total: $510.00

AD Exp..: XXXXXXXXXXX5606

Adjustment date: 09/14/2009 NFARMER
08/07/2008 INTEFSW 00008510 12187452
02 FC:1111 -510.00 OP

FORM PET651G (Rev. 08/07)

UNITED STATES PATENT AND TRADEMARK OFFICE

Commissioner for Patents
United States Patent and Trademark Office
P.O. Box 1450
Alexandria, VA 22313-1450
www.uspto.gov

The Law Firm of Andrea Hence Evans, LLC
14625 Baltimore Ave., #853
Laurel MD 20707

OCT 16 2008

In re Application of: HISADA, TAKASHI et al.
Application No.: 12/187,453
Filed: August 7, 2008
Title: UNDERFILL AIR VENT FOR FLIPCHIP BGA

DECISION ON PETITION TO MAKE SPECIAL FOR NEW APPLICATION UNDER 37 C.F.R. § 1.102 & M.P.E.P. § 708.02

This is a decision on the petition filed on August 7, 2008 to make the above-identified application special for accelerated examination procedure under 37 C.F.R. § 1.102(d).

The petition to make the application special is **DISMISSED.**

REGULATION AND PRACTICE

A grantable petition to make special under 37 C.F.R. § 1.102(d) and pursuant to the "Change to Practice for Petitions in Patent Applications to Make Special and for Accelerated Examination" published in the Federal Register on June 26, 2006 (71 Fed. Reg. 36323), must satisfy the following conditions:

I. Conditions Regarding the Application:

1. the application must be a non-reissue utility or design application filed under 37 CFR 1.111(a);
2. the application, the petition and the required fees must be filed electronically using the USPTO's electronic filing system (EFS), or EFS-web; if not filed electronically, a statement asserting that EFS and EFS-web were not available during the normal business hours.
3. at the time of filing, the application must be complete under 37 CFR 1.51 and in condition for examination;
4. the application must contain three or fewer independent claims and twenty or fewer total claims and the claims must be directed to a single invention.

II. Conditions Regarding the Petition:

The petition must:

1. be filed with the application;
2. include a statement that applicant agrees not to separately argue the patentability of any independent claim during any appeal in the application;
3. include a statement that applicant agrees to make an election without traverse in a telephone interview.
4. include a statement that applicant agrees to conduct such an interview when requested by the examiner.

5. include a statement, made based on a good faith belief, that a preexamination search in compliance with the following requirements, was conducted, including an identification of the field of search by United States class and subclass, where applicable, and for database searches, the search logic or chemical structure or sequence used as a query, the name of the file(s) searched and the database service, and the date of the search.

The preexamination search must:

5.1 involve U.S. patents and patent application publications, foreign patent documents, and non-patent literature, unless the applicant can justify with reasonable certainty that no references more pertinent than those already identified are likely to be found in the eliminated sources and includes such a justification with this statement;

5.2. be directed to the claimed invention and encompass all of the features of the claims, giving the claims the broadest reasonable interpretation;

5.3. encompass the disclosed features that may be claimed.

6. must provide in support of the petition an accelerated examination support document. An accelerated examination support document must include:

6.1. an information disclosure statement (IDS) in compliance with 37 CFR 1.98 citing each reference deemed most closely related to the subject matter of each of the claims;

6.2. an identification of all the limitations in the claims that are disclosed by the reference specifying where the limitation is disclosed in the cited reference;

6.3. a detailed explanation of how each of the claims are patentable over the references cited with particularity required by 37 CFR 1.111(b) and (c);

6.4. a concise statement of the utility of the invention as defined in each of the independent claims (unless the application is a design application);

6.5. a showing of where each limitation of the claims finds support under 35 U.S.C. 112, first paragraph, in the written description of the specification. If applicable, the showing must also identify: (1) each means- (or step) plus-function claim element that invokes consideration under 35 U.S.C. 112, sixth paragraph; and (2) the structure, material, or acts in the specification that corresponds to each means- (or step) plus-function claim element that invokes consideration under 35 U.S.C. 112, sixth paragraph; if the application claims the benefit of one or more applications under title 35, United States Code, the showing must also include where each limitation of the claims finds support under 35 U.S.C. 112, first paragraph, in each such application in which such supports exists;

6.6. an identification of any cited references that may be disqualified under 35 U.S.C. 103(c).

REVIEW OF FACTS

The conditions I: 1-4, II: 1-5, 5.1, 5.3, 6, 6.1, 6.4, and 6.6 above are considered to have been met. However, the petition fails to comply with conditions II: 5.2, 6.2, 6.3, and 6.5 above. Therefore, the petition fails to meet the required conditions to be accorded special status under the accelerated examination procedure.

Discussion

When referring to "the petition" herein below, the received papers under consideration include the four page PTO/SB/28 form "Petition to Make Special Under Accelerated Examination Program", the "pre-examination search document" (PESD) including pages 1-3; the "accelerated examination support document" (AESD) comprising pages 1-11, and an Information Disclosure Statement (IDS).

Regarding the requirements of section II element 5.2 outlined above, it appears the search outlined in the petition omitted a critical search area by not searching in the following classes/subclasses combinations:

29/743, 832, 840-842, 832-834;

438/118-119, 126-127;

257/787, 795;

E21.503-504+

Regarding the requirements of section II element 6.2 outlined above, the petition fails to identify all of the limitations in the application claim that are disclosed in each of the reference(s) and where the limitation is disclosed in each of the cited reference. As stated in the policy published in the Federal Register on June 26, 2006 (71 Fed. Reg. 36323), for each reference cited, the examination support document must include an identification of all the limitations in the claims that are disclosed by the reference specifying where the limitation is disclosed in the cited reference. The policy statement does not caveat "the independent claims", nor does it allow for grouping and general discussions. A grantable petition must delineate every limitation of every claim and identify where the equivalent limitation is disclosed in each piece of prior art cited on the IDS. As is published on www.uspto.gov/web/patents/accelerated/ in "Guidelines for Applicants under the new accelerated examination procedures"):

> *For each reference cited, the accelerated examination support document must include an identification of all the limitations in the claims that are disclosed by the reference specifying where the limitation is disclosed in the cited reference. Applicants should specify where in each of the cited references the particular claim limitations are found. This process is intended to be analogous to the analysis an examiner uses when locating a relevant prior art reference and then determining whether the reference contains the claimed limitation. For each claimed limitation, the examiner would consider the disclosure of the reference and all reasonable portions in the reference where the limitation is shown. When preparing an Office Action, the examiner would correlate the limitation to the portion of reference which best characterizes the limitation. This part of the AESD is not intended to be an exhaustive listing of every conceivable subjective interpretation of how a claim limitation may read on the reference. Applicants should point out what are considered to be the relevant representations of the limitation in the reference. A limitation may be found in more than one portion of the reference and should be pointed out, yet the intention is not to have applicants point out every conceivable interpretation. The USPTO will adopt a rule of reason when evaluating this portion of the AESD. Unless the representation is so deficient that it would materially effect examination of the application (e.g., numerous instances where the limitations are*

not shown where applicant states they are), the representation will be deemed to be sufficient for this part of the AESD.

Petitioner's submission is not specific enough. Petitioner points out some limitations of the claim and provides direction to areas of the prior art where the corresponding limitation may be found. Petitioner does not address each discrete limitation (i.e., each single limitation, NOT multiple limitations bundled together) and state where it is (or state that it is not) found in each one of the most closely related prior art. For example, the following statement on p. 6 of the AESD is not specific enough, and it is factually incorrect too:

> **According to the limitation of "an underfill resin dispense nozzle for dispensing underfill resin in a continuous manner at all peripheral edges of said semiconductor die" of claim 1, Hong et al. specifically does not teach this limitation. Hong et al. teach dispensing the underfill resin on one side of the semiconductor chip (see figure 4) and does not teach dispensing the underfill resin at all peripheral edges in a continuous manner, as claimed.**

Note that on col. 4, ll. 18-21, Hong teaches that the dispensing via sub-ducts 25 can take place on both sides of the main duct, and hence of the chip:

> sub-ducts **25**. Although this embodiment of the present invention comprises the sub-ducts **25** disposed on one side of the main duct **23**, the sub-ducts **25** can be disposed on both sides of the main duct **23**.

The requirement of section II element 6.2 can be satisfied by listing verbatim ("copy and paste") the presently filed claim (i.e., the claim of the instant application) and by indicating where each discrete limitation (without bundling limitations to the extent possible) of said presently filed claim is taught (or is not taught) in each one of the most closely related references that is cited, by specifically indicating the element number and/or the relevant page/paragraph and line number(s), or by indicating "(not disclosed)" where appropriate - in order to ensure that no limitation was left out inadvertently. Claim recitations must be complete. Statements such as "Limitation II(b) – (not disclosed)", i.e., recitations that do not spell out the relevant limitations should be avoided. This one-to-one mapping should be performed individually, with regard to each one of the most closely related prior art that is cited, one reference at a time. Applicant's attention is drawn to the fact that the requirement of this element calls for a straight mapping of each single limitation unto the prior art. Section II element 6.2 is not the proper venue to imply patentability by bundling limitations and concluding that the combination is not disclosed. The present mapping that properly maps some discrete limitations in one place, only to bundle them later with other limitations, and determine that they are not disclosed may create confusion and noncompliance with the specificity requirement (see e.g., on p. 6 of the AESD the first and third

paragraphs of the mapping unto Hong). Patentability arguments should be made only in response to the requirement of section II element 6.3.

With respect to the requirements of section II element 6.3 outlined above, the petition fails to provide a detailed explanation of how each the claim is patentable over (each of) the reference(s) with particularity required by 37 CFR 1.111(b) and (c). Petitioners should be specific in their explanation and include the identification of specific claim limitations that support their position, where appropriate. Petitioners must distinguish the claim from each piece of prior art cited. General statements that the claims are neither anticipated nor rendered obvious by the cited references or that the references are not properly combinable will not be acceptable. The Office cannot infer or guess what petitioner believes the differences between the claims and the teachings of the prior art to be. Petitioner's statements must also be consistent and must be related to the claim language. In the instant petition, Petitioner listed the entire claim and concluded that it defines over the cited prior art. For these reasons, the petition does not meet the requirement of section II, element 6.3. The requirement of section II element 6.3 can be satisfied by indicating for the presently filed claim (i.e., the claim of the instant application) which <u>specific</u> i.e., <u>discrete</u> limitation(s) in said presently filed claim define(s) over each one of the most closely related references that is cited. This patentability showing should be performed individually, with regard to each one of the most closely related prior art that is cited, <u>one reference at a time</u>. Patentability arguments must specifically spell out the relevant limitation(s); prior art patents can be referred to by the last name of the first inventor. Statements such as "Reference A does not teach limitation II(b)" must be avoided.

Regarding the requirements of section II element 6.5 outlined above, the requirements of this section are not met because lack of specificity. A grantable petition requires petitioner to provide a showing of where <u>each limitation</u> of the claim finds support under 35 U.S.C. 112, first paragraph, in the written description of the specification. The instant petition only identifies portions of text with respect to claim paragraphs as opposed to the disclosure of the required claim limitations, addressed individually for each limitation in each claim. For example, the following mapping on p. 10 of the AESD lacks the required specificity because it refers to about one and a half page in the specification:

> **a semiconductor die with a top surface and a bottom surface wherein said bottom surface is in physical communication with a machine stage (page 6, lines 1-page 7, line 17);**

The requirement of section II element 6.5 can be satisfied by listing verbatim the presently filed claim (by "copy and paste") and by indicating where the instant application (and separately each one of the priority documents – if applicable) teaches <u>each discrete limitation</u> (without bundling limitations to the extent possible) in said presently filed claim, by indicating the element number and/or the relevant page and line numbers. If the application(s) for which domestic priority is claimed is/are identical to the present application, a statement to this effect in lieu to the required mapping is acceptable. Applicant's attention is also drawn to the requirements relevant under 35 U.S.C 112, 6th paragraph, listed above. Should this requirement not apply to the present application, Applicant should make a statement in this regard.

DECISION

For the above-stated reasons, the petition is **dismissed**. The application will therefore be taken up by the examiner for action in its regular turn.

Petitioner is given a single opportunity to perfect the petition. Any request for reconsideration of this decision must be submitted within 1 (one) month or 30 (thirty) days, whichever is longer, (no extension of time under 37 CFR 1.136(a)) from the date of this decision in order to be considered timely. Any request for reconsideration must address all of the deficiencies indicated above.

Petitioner is reminded that, upon granting of the special status of the application on request for reconsideration, the application will be processed expeditiously. However, due to the dismissal of the instant petition, examination may not be completed within twelve months of the filing date of the application.

Any inquiry regarding this decision should be directed to Ehud Gartenberg, TC 3700 Special Programs Examiner, at (571) 272-4828. In his absence, an inquiry can be directed to J. Harrison, Special Program Examiner, at 571 272-4449.

Ehud Gartenberg

Ehud Gartenberg
Special Programs Examiner
Technology Center 3700

UNITED STATES PATENT AND TRADEMARK OFFICE

Commissioner for Patents
United States Patent and Trademark Office
P.O. Box 1450
Alexandria, VA 22313-1450
www.uspto.gov

The Law Firm of Andrea Hence Evans, LLC
14625 Baltimore Ave., #853
Laurel MD 20707

NOV 25 2008

In re Application of: HISADA, TAKASHI et al.
Serial No.: 12/187453
Filed: August 07, 2008
Title: UNDERFILL AIR VENT FOR FLIPCHIP BGA

DECISION ON PETITION TO MAKE SPECIAL FOR NEW APPLICATION UNDER 37 C.F.R. § 1.102 & M.P.E.P. § 708.02

This is a decision on the request for reconsideration filed on October 31, 2008 to make the above-identified application special for accelerated examination procedure under 37 C.F.R. § 1.102(d). The request has been treated as a renewed petition to make the above-identified application special and has been viewed as a supplement to and in combination with the original petition which was filed on August 7, 2008 and dismissed in the Office letter of October 16, 2008.

The petition to make the application special is **DENIED.**

REGULATION AND PRACTICE

A grantable petition to make special under 37 C.F.R. § 1.102(d) and pursuant to the "Change to Practice for Petitions in Patent Applications to Make Special and for Accelerated Examination" published in the Federal Register on June 26, 2006 (71 Fed. Reg. 36323), must satisfy the conditions as outlined in the prior petition decision. The conditions are not repeated herein.

REVIEW OF FACTS

The petition fails to meet the requirement of section II: 6.2, 6.3, 6.4, and 6.5, because it appears that the claim argued is not the claim filed. Therefore, the petition fails to meet the required conditions to be accorded special status under the accelerated examination procedure.

DISCUSSION

The original filed claim is reproduced below:

CLAIMS:

The invention claimed is:

1. A flip-chip assembly comprising:

a semiconductor die with a top surface and a bottom surface wherein said bottom surface is in physical communication with a machine stage;

an underfill resin dispense nozzle for dispensing underfill resin in a continuous manner at all peripheral edges of said semiconductor die;

a laminate through hole positioned on said bottom surface of said semiconductor die;

an air vent in physical communication with the laminate through hole and a vacuum suction means for using suction force to enable underfill spread from all peripheral edges simultaneously;

wherein the machine stage further comprises a head mechanism having a pressure sensor, and re-usable tape;

wherein said head uses the re-usable tape which attracts excessive resin protruding from said through hole; and

a cleaning pad disposed at a bottom side of said head mechanism to contact the re-usable tape and clean attached resin off of the re-usable tape.

The claim argued is reproduced below:

1. A flip-chip assembly comprising:

a semiconductor die with a top surface and a bottom surface wherein said bottom surface is in physical communication with a machine stage;

an underfill resin dispense nozzle for dispensing underfill resin in a continuous manner at all peripheral edges of said semiconductor die;

a laminate through hole positioned on said bottom surface of said semiconductor die wherein said laminate through hole is formed by drilling or laser;

wherein said through hole is not capped by solder resist;

wherein said through hole provides an electrical route and thermal conduction path;

an air vent in physical communication with the laminate through hole and a vacuum suction means for using suction force to enable underfill spread from all peripheral edges simultaneously;

wherein the underfill resin is excessively supplied at approximately a maximum excessive amount of 10% of the total underfill amount to ensure an elimination of voids;

wherein the machine stage further comprises a rotary head mechanism having a pressure sensor, and re-usable tape;

wherein said rotary head moves up and down with appropriate timing control and rotates the re-usable tape which attracts excessive resin protruding from said through hole; and

a cleaning pad disposed at a bottom side of said rotary head mechanism to contact the re-usable tape and clean attached resin off of the re-usable tape.

The claim as argued is reproduced again below, the limitations in *italics* appear not to be in the case:

A flip-chip assembly comprising:
a semiconductor die with a top surface and a bottom surface wherein said bottom surface is in physical communication with a machine stage;
an underfill resin dispense nozzle for dispensing underfill resin in a continuous manner at all peripheral edges of said semiconductor die;
a laminate through hole: positioned on said bottom surface of said semiconductor die *wherein said laminate through hole is formed by drilling or laser;*
wherein said through hole is not capped by solder resist;
wherein said through hole provides an electrical route and thermal conduction path;
an air vent in physical communication with the laminate through hole: and a vacuum suction memos for using suction force to enable underfill spread from all peripheral edges simultaneously;
wherein the underfill resin is excessively supplied at approximately a maximum excessive amount of 10% of the total underfill amount to ensure an elimination of voids;
wherein the machine stage further comprises a *rotary* head mechanism having a pressure sensor and re-usable tape;
wherein said *rotary head moves up and down with appropriate timing control and rotates* the re-usable tape which attracts excessive resin protruding from said through hole; and
a cleaning pad disposed at a bottom side of said rotary head mechanism to contact the re-usable tape and clean attached resin off of the re-usable rope.

General guidelines on satisfying the requirements of conditions II: 6.2, 6.3, 6.4, and 6.5 are given below:

The requirement of section II element 6.2 can be satisfied by listing verbatim ("copy and paste") all the presently filed claims (i.e., the claims of the instant application) and by indicating where each discrete limitation (without bundling limitations to the extent possible) of each one of said

presently filed claims is taught (or is not taught) in each one of the most closely related references that is cited, by specifically indicating the element number and/or the relevant page/paragraph and line number(s), or by indicating "(not disclosed)" where appropriate - in order to ensure that no limitation was left out inadvertently. Limitations for which antecedent basis has been established and mapped unto the prior art reference need not be mapped repeatedly (the first time suffice). However limitations not disclosed must be specifically singled out (without bundling with disclosed limitations – to the extent possible). Note that disclosure may be express, implicit, or inherent. Claim recitations must be complete. Statements such as "Limitation II(b) – (not disclosed)", i.e., statements that do not spell out the text of the relevant limitations should be avoided. This one-to-one mapping should be performed individually, with regard to each one of the most closely related prior art that is cited, one reference at a time. The requirement of this element calls for a straight mapping of each single limitation unto the prior art. Section II element 6.2 is not the proper venue to imply patentability by bundling limitations and concluding that the combination is not disclosed. Patentability arguments should be made only in response to the requirement of section II element 6.3.

The requirement of section II element 6.3 can be satisfied by indicating for each one of the presently filed claims (i.e., the claims of the instant application) which specific i.e., discrete limitation(s) in each one of said presently filed claims define(s) over each one of the most closely related references that is cited. This patentability showing should be performed individually, with regard to each one of the most closely related prior art that is cited, one reference at a time. Patentability arguments must specifically spell out the relevant limitation(s); prior art patents can be referred to by the last name of the first inventor. Statements such as "Reference A does not teach limitation II(b)" will suffice, as long as the reference name and the text of the specific limitation are fully spelled out in the statement. Lack of obviousness analysis for combining two or more references should be performed when a "most closely related prior art" reference clearly indicates reasons for such combination. With regard to each dependent claim, there should be an unequivocal statement whether the patentability of each dependent claim is predicated solely on that of the claim from which it depends (e.g., "Dependent claim X is patentable solely because of the limitations of the claims from which it depends" - will suffice), or Applicant should provide a detailed explanation of patentability specific to that particular claim (only if the claim recites new limitations that further define over the prior art).

Regarding the requirements of section II element 6.4, the petition fails to identify a concise statement of the utility of the invention as separately defined in the independent claim. A general statement directed to the overall concept of the invention is not specifically relating the utility to each of the independent claims as is required by the policy. Petitioner should reference separately each one of the independent claims specifically when discussing the utility of the invention.

The requirement of section II element 6.5 can be satisfied by listing verbatim all the presently filed claims (by "copy and paste") and by indicating where the instant application (and separately each one of the priority documents – if applicable) teaches each discrete limitation (without bundling limitations to the extent possible) in each one of said presently filed claims, by indicating the element number and/or the relevant page and line numbers. To the extent possible,

Petitioner should indicate the enablement location in the specification as required by statute, i.e., "the manner and process of making and using it," rather than pointing to the first occurrence of establishing antecedent for the limitation in the specification. For this reason Petitioner should indicate, to the extent possible, the combination of the element, figure, page, (or paragraph), and line numbers in the specification where the mapped limitation is actually taught and enabled. If the application(s) for which domestic priority is claimed is/are identical to the present application, a statement to the effect that they are "substantially identical" in lieu of the required additional mapping is acceptable. Petitioner's attention is also drawn to the requirements relevant under 35 U.S.C 112, 6th paragraph, listed above. Should this requirement not apply to the present application, Petitioner should make a statement in this regard.

DECISION

For at least the above-stated reason (for failing to meet the requirement of section II: element 6.2, 6.3, 6.4, and 6.5), the petition is **DENIED**. The application will remain in its regular status and will be taken up by the examiner for action in its regular turn.

Petitioner is reminded that a single opportunity to perfect the petition is given. Therefore, further petitions for accelerated examination in this application will not be entertained.

Any inquiry regarding this decision should be directed to Ehud Gartenberg, TC 3700 Special Program Examiner, at (571) 272-4828.

Ehud Gartenberg

Ehud Gartenberg
Special Program Examiner
Technology Center 3700

UNITED STATES PATENT AND TRADEMARK OFFICE

UNITED STATES DEPARTMENT OF COMMERCE
United States Patent and Trademark Office
Address: COMMISSIONER FOR PATENTS
P.O. Box 1450
Alexandria, Virginia 22313-1450
www.uspto.gov

APPLICATION NO.	FILING DATE	FIRST NAMED INVENTOR	ATTORNEY DOCKET NO.	CONFIRMATION NO.
12/187,454	08/07/2008	Mark A. Stan	7005B (9456-106045)	3056

7590 01/23/2009
Emcore Corporation
1600 Eubank Blvd., SE
Albuquerque, NM 87123

EXAMINER
LEE, HSIEN MING

ART UNIT	PAPER NUMBER
2823	

MAIL DATE	DELIVERY MODE
01/23/2009	PAPER

Please find below and/or attached an Office communication concerning this application or proceeding.

The time period for reply, if any, is set in the attached communication.

UNITED STATES PATENT AND TRADEMARK OFFICE

Commissioner for Patents
United States Patent and Trademark Office
P.O. Box 1450
Alexandria, VA 22313-1450
www.uspto.gov

Emcore Corporation
1600 Eubank Blvd., SE
Albuquerque, NM 87123

In re Application of: STAN *et al.* Serial No.: **12/187,454** Filed: August 07, 2008 Title: **EXPONENTIALLY DOPED LAYERS IN INVERTED METAMORPHIC MULTIJUNCTION SOLAR CELLS**	DECISION ON PETITION TO MAKE SPECIAL FOR NEW APPLICATION UNDER 37 C.F.R. § 1.102 & M.P.E.P. § 708.02

This is a decision on the petition filed on August 07, 2008, to make the above-identified application special for accelerated examination procedure under 37 C.F.R. § 1.102(d).

The petition to make the application special is **DISMISSED**.

REGULATION AND PRACTICE

A grantable petition to make special under 37 C.F.R. § 1.102(d) and pursuant to the "Change to Practice for Petitions in Patent Applications to Make Special and for Accelerated Examination" published in the Federal Register on June 26, 2006 (71 Fed. Reg. 36323), must satisfy the following conditions:

I. Conditions Regarding the Application:

1. the application must be a non-reissue utility or design application filed under 37 CFR 1.111(a);
2. the application, the petition and the required fees must be filed electronically using the USPTO's electronic filing system (EFS), or EFS-web; if not filed electronically, a statement asserting that EFS and EFS-web were not available during the normal business hours.
3. at the time of filing, the application must be complete under 37 CFR 1.51 and in condition for examination;
4. the application must contain three or fewer independent claims and twenty or fewer total claims and the claims must be directed to a single invention.

II. Conditions Regarding the Petition:

The petition must:

1. be filed with the application;

2. include a statement that applicant agrees not to separately argue the patentability of any dependent claim during any appeal in the application;

3. include a statement that applicant agrees to make an election without traverse in a telephone interview.

4. include a statement that applicant agrees to conduct such an interview when requested by the examiner.

5. include a statement, made based on a good faith belief, that a preexamination search in compliance with the following requirements, was conducted, including an identification of the field of search by United States class and subclass, where applicable, and for database searches, the search logic or chemical structure or sequence used as a query, the name of the file(s) searched and the database service, and the date of the search.

The preexamination search must:

5.1 involve U.S. patents and patent application publications, foreign patent documents, and non-patent literature, unless the applicant can justify with reasonable certainty that no references more pertinent than those already identified are likely to be found in the eliminated sources and includes such a justification with this statement;

5.2. be directed to the claimed invention and encompass all of the features of the claims, giving the claims the broadest reasonable expectation;

5.3. encompass the disclosed features that may be claimed.

6. must provide in support of the petition an accelerated examination support document. An accelerated examination support document must include:

6.1. an information disclosure statement (IDS) in compliance with 37 CFR 1.98 citing each reference deemed most closely related to the subject matter of each of the claims;

6.2. an identification of all the limitations in the claims that are disclosed by the reference specifying where the limitation is disclosed in the cited reference;

6.3. a detailed explanation of how each of the claims are patentable over the references cited with particularity required by 37 CFR 1.111(b) and (c);

6.4. a concise statement of the utility of the invention as defined in each of the independent claims (unless the application is a design application);

6.5. a showing of where each limitation of the claims finds support under 35 USC 112, first paragraph, in the written description of the specification. If applicable, the showing must also identify: (1) each means- (or step) plus-function claim element that invokes consideration under 35 UDC 112, sixth paragraph; and (2) the structure, material, or acts in the specification that corresponds to each means- (or step) plus-function claim element that invokes consideration under 35 UDC 112, sixth paragraph; if the application claims the benefit of one or more applications under title 35, United States Code, the showing must also include where each limitation of the claims finds support under 35 USC 112, first paragraph, in each such application in which such supports exists;

6.6. an identification of any cited references that may be disqualified under 35 USC 103(c).

REVIEW OF FACTS

The conditions I.1-4; II.5.1 5.3, 6 and 6.1- 6.4, above are considered to have been met. However, the petition fails to comply with conditions section II, subsection 5.2, 6.3 and 6.5 above. Therefore, the petition fails to meet the required conditions to be accorded special status under the accelerated examination procedure.

In order to meet the requirement of section II, subsection 5.2, the preexamintion search provided appears to be lacking. It is indicated that the searches in the areas outlined in the Preexamination Search "were performed using a search strategy of combining the various terms of multi-junction solar cell, exponential, surrogate, replacement, substitute, multi-layer, graded interlayer, graded bandgap and exponential doping. The various combinations of search terms included "multi-junction solar cells and exponential", "multi-junction solar cells and surrogate", "multi-junction solar cells and substitute substrate" and "multi-junction solar cells and replacement substrate". Individual search terms, such as "multi-junction solar cell", "multi-layer", "graded interlayer", "interlayer, sub-cell", "graded band gap", and "exponential doping" were also searched. " Without showing the specific logic used to combine the terms, it is left to the reader to ponder the actual logic used to combine the terms. Without providing the search logic used in combining these terms or in conjunction with other terms, the search provided is inadequate to encompass all the features of the claims. For the above reason, the petition does not meet the requirements of section II, subsection 5.2, as set forth above.

Regarding the requirements of section II, subsection 6.5, states "if the application claims the benefit of one or more applications under title 35, United States Code, the showing must also include where each limitation of the claims finds support under 35 USC 112, first paragraph, in each such application in which such supports exists." Since this application contains a claim for priority to Application Serial No. 11/956,069, the examination support document must include a showing of support for each claimed limitation in the parent application. For these reasons, the petition does not meet the requirements of section II, subsection. 6.5, as set forth above.

Regarding the requirements of section II, subsection 6.6, states that an identification of any cited references that may be disqualified under 35 USC 103(c) must be provided. The petition lacks any such identification. For these reasons, the petition does not meet the requirements of section II, subsection. 6.6, as set forth above.

DECISION

For the above-stated reasons, the petition is **dismissed**. The application will therefore be taken up by the examiner for action in its regular turn.

Petitioner is given a single opportunity to perfect the petition. Any request for reconsideration of this decision must be submitted within 1 (one) month or 30 (thirty) days, whichever is longer, from the date of this decision in order to be considered timely. Any request for reconsideration must address the deficiencies indicated above.

Petitioner is reminded that, upon granting of the special status of the application on request for reconsideration, the application will be processed expeditiously. However, due to the dismissal of the instant petition, examination may not be completed within twelve months of the filing date of the application.

Any inquiry regarding this decision should be directed to Clayton E. LaBalle, Quality Assurance Specialist (QAS), at (571) 272-1594.

Clayton E. LaBalle, QAS
Technology Center 2800
Semiconductors, Electrical and Optical
Systems and Components

UNITED STATES PATENT AND TRADEMARK OFFICE

UNITED STATES DEPARTMENT OF COMMERCE
United States Patent and Trademark Office
Address: COMMISSIONER FOR PATENTS
P.O. Box 1450
Alexandria, Virginia 22313-1450
www.uspto.gov

APPLICATION NO.	FILING DATE	FIRST NAMED INVENTOR	ATTORNEY DOCKET NO.	CONFIRMATION NO.
12/187,454	08/07/2008	Mark A. Stan	7005B (9456-106045)	3056

7590 04/24/2009

Emcore Corporation
1600 Eubank Blvd., SE
Albuquerque, NM 87123

EXAMINER
LEE, HSIEN MING

ART UNIT	PAPER NUMBER
2823	

MAIL DATE	DELIVERY MODE
04/24/2009	PAPER

Please find below and/or attached an Office communication concerning this application or proceeding.

The time period for reply, if any, is set in the attached communication.

UNITED STATES PATENT AND TRADEMARK OFFICE

Commissioner for Patents
United States Patent and Trademark Office
P.O. Box 1450
Alexandria, VA 22313-1450
www.uspto.gov

Emcore Corporation
1600 Eubank Blvd., SE
Albuquerque, NM 87123

In re Application of: STAN et al. Serial No.: 12/187,454 Filed: August 07, 2008 Title: **EXPONENTIALLY DOPED LAYERS IN INVERTED METAMORPHIC MULTIJUNCTION SOLAR CELLS**	DECISION ON REQUEST FOR RECONSIDERATION OF PREVIOUS DECISION

This decision on the petition filed February 16, 2009. The petition has been treated as a petition requesting reconsideration of the previous decision of January 23, 2009, dismissing the petition to make special under 37 C.F.R. §1.102(d) filed August 07, 2008.

The petition to make the application special is **DENIED**.

REGULATION AND PRACTICE

A grantable petition to make special under 37 C.F.R. § 1.102(d) and pursuant to the "Change to Practice for Petitions in Patent Applications to Make Special and for Accelerated Examination" published in the Federal Register on June 26, 2006 (71 Fed. Reg. 36323), must satisfy the following conditions:

I. Conditions Regarding the Application:

1. the application must be a non-reissue utility or design application filed under 37 CFR 1.111(a);

2. the application, the petition and the required fees must be filed electronically using the USPTO's electronic filing system (EFS), or EFS-web; if not filed electronically, a statement asserting that EFS and EFS-web were not available during the normal business hours.

3. at the time of filing, the application must be complete under 37 CFR 1.51 and in condition for examination;

4. the application must contain three or fewer independent claims and twenty or fewer total claims and the claims must be directed to a single invention.

II. Conditions Regarding the Petition:

The petition must:

1. be filed with the application;

2. include a statement that applicant agrees not to separately argue the patentability of any independent claim during any appeal in the application;

3. include a statement that applicant agrees to make an election without traverse in a telephone interview.

4. include a statement that applicant agrees to conduct such an interview when requested by the examiner.

5. include a statement, made based on a good faith belief, that a preexamination search in compliance with the following requirements, was conducted, including an identification of the filed of search by United States class and subclass, where applicable, and for database searches, the search logic or chemical structure or sequence used as a query, the name of the file(s) searched and the database service, and the date of the search.

The preexamination search must:

5.1 involve U.S. patents and patent application publications, foreign patent documents, and non-patent literature, unless the applicant can justify with reasonable certainty that no references more pertinent than those already identified are likely to be found in the eliminated sources and includes such a justification with this statement;

5.2. be directed to the claimed invention and encompass all of the features of the claims, giving the claims the broadest reasonable expectation;

5.3. encompass the disclosed features that may be claimed.

6. must provide in support of the petition an accelerated examination support document. An accelerated examination support document must include:

6.1. an information disclosure statement (IDS) in compliance with 37 CFR 1.98 citing each reference deemed most closely related to the subject matter of each of the claims;

6.2. an identification of all the limitations in the claims that are disclosed by the reference specifying where the limitation is disclosed in the cited reference;

6.3. a detailed explanation of how each of the claims are patentable over the references cited with particularity required by 37 CFR 1.111(b) and (c);

6.4. a concise statement of the utility of the invention as defined in each of the independent claims (unless the application is a design application);

6.5. a showing of where each limitation of the claims finds support under 35 USC 112, first paragraph, in the written description of the specification. If applicable, the showing must also identify: (1) each means- (or step) plus-function claim element that invokes consideration under 35 UDC 112, sixth paragraph; and (2) the structure, material, or acts in the specification that corresponds to each means- (or step) plus-function claim element that invokes consideration under 35 UDC 112, sixth paragraph; if the application claims the benefit of one or more applications under title 35, United States Code, the showing must also include where each limitation of the claims finds support under 35 USC 112, first paragraph, in each such application in which such supports exists;

6.6. an identification of any cited references that may be disqualified under 35 USC 103(c).

REVIEW OF FACTS

The previous petition was dismissed citing failure to comply with conditions of section II, subsection 5.2, 6.3 and 6.5 above. The instant petition, and accompanying examination support document remedy the deficiencies regarding section II, subsections 6.3 and 6.5. However, the petition still does not requirements set forth in section II, subsection 5.2.

In the previous decision, it was noted that the search provided was merely a listing of terms, and didn't include any search logic to show the structure of the search. In response the petitioner include the following:

"The search logic was directed to searching for and identifying prior publications that included any term that would be reasonably related to solar cells having multiple junctions with at least one graded interlayer and that used exponential doping. The search logic was also directed to solar cells and methods of making solar cells using exponential doping and surrogate substrates."

The search logic referred to in the first petition decision was not directed to the reasoning behind the search, but rather the structure of the search. The search logic refers to the use of Boolean and proximity operators to logically combine the search terms to increase the likelihood of retrieving references which are directed to similar subject matter as the terms searched. For future reference, examples of common search logic for electronic databases can be found in the document titled "Sample AE Pre-Examination Search Document" provided on the USPTO internet pages directed to accelerated examination. Without providing the search logic used in combining these terms or in conjunction with other terms, the search provided is inadequate to encompass all the features of the claims. For the above reason, the petition does not meet the requirements of section II, subsection 5.2, as set forth above.
(http://www.uspto.gov/web/patents/accelerated/)

DECISION

For the above-stated reasons, the petition is **denied**. The application will therefore be taken up by the examiner for action in its regular turn.

Any inquiry regarding this decision should be directed to the undersigned at (571) 272-1594.

Clayton E. LaBalle, T-QAS
Technology Center 2800 - Semiconductors,
Electrical & Optical Systems & Components

UNITED STATES PATENT AND TRADEMARK OFFICE

Commissioner for Patents
United States Patent and Trademark Office
P.O. Box 1450
Alexandria, VA 22313-1450
www.uspto.gov

THE WEBB LAW FIRM PC
700 KOPPERS BUILDING
436 SEVENTH AVENUE
PITTSBURGH PA 15219

MAILED

APR 29 2009

OFFICE OF PETITIONS

In re Application of	:	
Migliore, et al.	:	
Application No. 12/187,498	:	ON PETITION
Deposited: August 7, 2008	:	
Attorney Docket No. 0644-081610	:	

This is in response to the "PETITION UNDER 37 C.F.R. 1.57(a) TO ACCORD A FILING DATE", filed October 10, 2008, requesting that the above-referenced application be accorded a filing date of August 7, 2008. This petition is being treated pursuant to 37 CFR 1.53(e)(2)[1].

Application papers in the above-identified application were deposited on August 7, 2008. However, on August 19, 2008, the Office of Patent Application Processing mailed applicants a "Notice of Incomplete Nonprovisional Application," notifying applicants that the application papers had not been accorded a filing date because the application was deposited without drawings. Applicants request that the application be accorded the filing date of August 7, 2008.

Petitioner's arguments and evidence have been considered. However, a review of the application confirms that, as filed, the application contained at least one method claim. MPEP 601.01(f) provides that:

> It has been USPTO practice to treat an application that contains at least one process or method claim as an application for which a drawing is not necessary for an understanding of the invention under 35 U.S.C. 113 (first sentence).

Thus, pursuant to § 601.01(f), a drawing is not considered essential for a filing date. The instant application is entitled to a filing date without drawings present in the application.

Accordingly, the Office should have granted the application a filing date and mailed a Notice of Omitted Items instead of a Notice of Incomplete Nonprovisional Application. As stated in

[1] Any request for review of a notification pursuant to paragraph (e)(1) of this section, or a notification that the original application papers lack a portion of the specification or drawing(s), must be by way of a petition pursuant to this paragraph accompanied by the fee set forth in § 1.17(f). In the absence of a timely (§ 1.181(f)) petition pursuant to this paragraph, the filing date of an application in which the applicant was notified of a filing error pursuant to paragraph (e)(1) of this section will be the date the filing error is corrected.

MPEP 601.01(g) under the section entitled, "Application Entitled to a Filing Date," applicant may submit an amendment to include the inadvertently omitted portion of the drawing(s) pursuant to 37 CFR 1.57(a):

> [i]f an application was filed on or after September 21, 2004, and contains a claim under 37 CFR 1.55 for priority of a prior-filed foreign application, or a claim under 37 CFR 1.78 for the benefit of a prior-filed provisional, nonprovisional, or international application that was present on the filing date of the application, and the omitted portion of the drawing(s) was inadvertently omitted from the application and is completely contained in the prior-filed application[.]

Receipt of the 10 sheets of drawings and the Preliminary Amendment seeking their entry, submitted with the instant petition, is acknowledged. The preliminary amendment will be considered by the examiner charged with examining this application.

To the extent the instant petition requests a filing date of August 7, 2008 with no drawings present in the application on filing, the petition is **GRANTED**.

Given the basis for granting this petition, the $400 petition fee has been refunded to Deposit Account No. 23-0650.

Pursuant to this decision, the application will be referred to Office of Patent Application Processing for:

X **correction of the filing date to August 7, 2008**;
X **for indication in Office records, as appropriate, that "0" sheets of drawings were present on filing** and
X **for issuance of a filing receipt.**

Telephone inquiries concerning this matter may be directed to Petitions Attorney Cliff Congo at (571) 272-3207.

Anthony Knight
Supervisor
Office of Petitions

UNITED STATES PATENT AND TRADEMARK OFFICE

Commissioner for Patents
United States Patent and Trademark Office
P.O. Box 1450
Alexandria, VA 22313-1450
www.uspto.gov

In re Application of :
Samuel Lax :

Application No. 12187500 :DECISION ON PETITION TO MAKE SPECIAL
Filed: :UNDER 37 CFR 1.102(c)(1)
:

Attorney Docket No. LIFESU-51193

This is a decision on the electronic petition under 37 CFR 1.102 (c)(1) ,filed 07-AUG-2008 to make the above-identified application special based on applicant's age as set forth in MPEP § 708.02, Section IV.

The petition is **GRANTED**.

A grantable petition to make an application special under 37 CFR 1.102(c)(1), MPEP § 708.02, Section IV: Applicant's Age must include a statement by applicant or a registered practitioner having evidence that applicant is at least 65 years of age. No fee is required.

Accordingly, the above-identified application has been accorded “special” status and will be taken up for action by the examiner upon the completion of all pre-examination processing.

Telephone inquires concerning this electronic decision should be directed to the Electronic Business Center at 866-217-9197.

All other inquires concerning either the examination or status of the application should be directed to the Technology Center.

0 5 NOV 2008

UNITED STATES PATENT AND TRADEMARK OFFICE

Commissioner for Patents
United States Patent and Trademark Office
P.O. Box 1450
Alexandria, VA 22313-1450
www.uspto.gov

William S. Frommer, Esq.
Frommer Lawrence & Haug LLP
745 Fifth Avenue
New York NY 10151

In re Application of	:	
KOTSUGAI et al.	:	
Application No.: 12/187,629	:	DECISION
Attorney Docket No.: 450137-06170	:	
For: GAME SYSTEM AND GAME	:	
MANAGING SERVER	:	

This decision is in response to applicants' petition filed in the United States Patent and Trademark Office (USPTO) on 29 August 2008, which has properly been treated as a petition under 37 CFR 1.182. The petition requests that the instant application be treated as a filing under 35 U.S.C. 371 rather than as a filing under 35 U.S.C. 111(a).

BACKGROUND

On 25 September 2006, applicants filed international application PCT/JP2006/318990, which designated the United States and claimed a priority date of 10 February 2006. A copy of the international application was communicated to the USPTO from the International Bureau on 16 August 2007. The thirty-month period for paying the basic national fee in the United States expired at midnight on 11 August 2008 (10 August 2008 being a Sunday).

On 07 August 2008, applicants filed submission for entry in to the national stage in the United States which was accompanied by, *inter alia*, a transmittal letter (Form PTO-1390), a specification, claims, abstract, and drawings.

On 18 August 2008, a Notice was mailed by the USPTO which evidenced that the application was treated as having been filed under 35 U.S.C. 111(a).

On 29 August 2008, applicants filed the instant petition to have the application treated as a filing under 35 U.S.C. 371 rather than as a filing under 35 U.S.C. 111(a). The petition has properly been treated as a petition under 37 CFR 1.182.

DISCUSSION

Conflicting Instructions

Any intended filing of an international application as a national stage application must clearly and unambiguously be identified as such and must satisfy all of the conditions set forth in 35 U.S.C. 371(c). The official PTO Notice published in the Official Gazette at 1077 OG 13 entitled "Minimum Requirements for Acceptance of Applications Under 35 U.S.C. 371 (the National Stage of PCT)" states, in part, the following:

> The Patent and Trademark Office is continuing to receive application papers which do not clearly identify whether the papers (1) are being submitted to enter the national stage of the Patent Cooperation Treaty (PCT) under 35 U.S.C. 371 or (2) are being filed as a regular national application under 35 U.S.C. 111.
>
> * * *
>
> If there are any conflicting instructions as to which sections of the statute (371 or 111) is intended the application will be accepted under 35 U.S.C. 111.

See also 37 CFR 1.495(g).

The Transmittal Letter (PTO-1390) filed on 07 August 2008 identified the application as a 371 of international application number PCT/JP2006/318990. However, when filing the application electronically, applicant selected in the Graphical User Interface, the radio button "Utility (Utility under 35 USC 111(a))" rather than the radio button "U.S. National Stage under 35 U.S.C. 371". The selection of the "Utility (Utility under 35 USC 111(a))" button is inconsistent with and contradicts the Transmittal Letter filed 07 August 2008. Since applicant gave conflicting instructions, the papers were properly considered as having been filed under 35 U.S.C. 111(a).

Petition Under 37 CFR 1.182

The petition fee of $400 has been charged to Deposit Account 50-0320. U.S. Statutes and Regulations do not make specific provision for the requested action and as such the Office does not grant such petitions for conversion as a mere matter of course. The Office will only grant such petitions upon a showing by applicant of sufficient cause (e.g., the loss of patent rights) where no other remedy is available. Here, a showing of sufficient cause has not been made.

Continuation Application

Applicant is entitled to claim benefit under 35 U.S.C. 120 and 365(c) of the filing date of the international application for the common subject matter, since this application (Serial No. 12/187,629) and the international application (PCT/JP2006/318990) designating the United States were copending on 07 August 2008. However, this reference must be submitted within the later of four months from the actual filing date of this application or sixteen months from the filing date of the international application. 37 CFR 1.78(a)(2)(ii). Applicant may file a petition

to accept an unintentionally delayed claim under 37 CFR 1.78(a)(3) for the benefit of the international application.

Applicant is reminded that in order to perfect the claim for priority under 35 U.S.C. 119, applicant must submit certified copies of the priority documents. The certified copies of priority documents submitted to the International Bureau cannot be relied upon to perfect the claim for priority. See MPEP § 1896.

CONCLUSION

For the reasons set forth above, the petition under 37 CFR 1.182 is **DISMISSED** without prejudice.

Any further correspondence with respect to this matter may be filed electronically via EFS-Web or if mailed should be addressed to Mail Stop PCT, Commissioner for Patents, Office of PCT Legal Administration, P.O. Box 1450, Alexandria, Virginia 22313-1450, with the contents of the letter marked to the attention of the Office of PCT Legal Administration.

/Daniel Stemmer/

Daniel Stemmer
Legal Examiner
PCT Legal Affairs
Office of Patent Cooperation Treaty
Legal Administration
Telephone: (571) 272-3301
Facsimile: (571) 273-0459

UNITED STATES PATENT AND TRADEMARK OFFICE

Commissioner for Patents
United States Patent and Trademark Office
P.O. Box 1450
Alexandria, VA 22313-1450
www.uspto.gov

William S. Frommer, Esq.
Frommer Lawrence & Haug LLP
745 Fifth Avenue
New York NY 10151

8/26/09

In re Application of	:
KOTSUGAI, YOSHINORI et al	: DECISION ON REQUEST TO
Application No. 12/187,629	: PARTICIPATE IN PATENT
Filed: Aug. 7, 2008	: PROSECUTION HIGHWAY
Attorney Docket No. 450137-06170	: PROGRAM AND PETITION
For: GAME SYSTEM AND GAME	: TO MAKE SPECIAL UNDER
MANAGING SERVER	: 37 CFR 1.102(d)

This is a decision on the request to participate in the Patent Prosecution Highway (PPH) program and the petition under 37 CFR 1.102(d), filed July 30, 2009, to make the above-identified application special.

The request is **GRANTED**.

Discussion

A grantable request to participate in the PPH pilot program and petition to make special require:

1. The U.S. application must validly claim priority under 35 U.S.C. 119(a) to one or more applications filed in the JPO, note where the JPO application with similar claims is not the same application from which the U.S. application claims priority that the applicant must identify the relationship between the JPO application with similar claims and the JPO priority application;

2. Applicant must submit a copy of: a. The allowable/patentable claim(s) from the JPO application(s) or if a copy of the allowable/patentable claims is available via the Dossier Access System (DAS) applicant may request the USPTO obtain a copy from the DAS, however if the USPTO is unable to obtain a copy from the DAS the applicant will be required to submit a copy; b. An English translation of the allowable/patentable claim(s) and c. A statement that the English translation is accurate;

3. Applicant must a. Ensure all the claims in the U.S. application must sufficiently correspond or be amended to sufficiently correspond to the allowable/patentable claim(s) in the JPO application(s) and b. Submit a claims correspondence table in English;

4. Examination of the U.S. application has not begun;

5. Applicant must submit: a. Documentation of prior office action: i. a copy of the office action(s) just prior to the "Decision to Grant a Patent" from each of the JPO application(s) containing the allowable/patentable claim(s) or ii. if the allowable/patentable claims(s) are from a "Notification of Reasons for Refusal" then a copy of the Notification of Reasons for Refusal or iii. if the JPO application is a first action allowance then no office action from the JPO is necessary should be indicated on the request/petition form; Further, if a copy of the documents from a or b above is available via the Dossier Access System (DAS) applicant may request the USPTO obtain a copy from the DAS, however if the USPTO is unable to obtain a copy from the DAS the applicant will be required to submit a copy; b. An English language translation of the JPO Office action from (5) (a) (i)-(ii) above c, A statement that the English translation is accurate;

6. Applicant must submit: a. An IDS listing the documents cited by the JPO examiner in the JPO office action (unless already submitted in this application) b. Copies of the documents except U.S. patents or U.S. patent application publications (unless already submitted in this application);

7. The required petition fee under 37 CFR 1.17(h).

This request to participate in the PPH pilot program and petition meet the requirements (1) through (7), above.

CONCLUSION

The request to participate in the PPH program and petition comply with the above requirements. Receipt of the requested document is acknowledged and has been entered. Accordingly, the above-identified application has been accorded "special" status. Response must be filed via the Electronic Filing System (EFS) with the Document Code PPH.PET.652.

This application is being forwarded to the examiner for action on the merits commensurate with this decision. Telephone inquiries concerning this decision should be directed to Henry C. Yuen, at 571-272-4856. All other inquiries concerning the examination or status of the application should be directed to the Supervisory Patent Examiner Peter Vo, Art Unit 3714, at 571-272-4690 and also accessible in the PAIR system at http://www.uspto.gov/ebc.index.html.

The petition make special is GRANTED.

/Henry C. Yuen/

Henry C. Yuen, Special Programs Examiner
Technology Center 3700 – Mechanical Engineering,
Manufacturing and Products
571-272-4856

UNITED STATES PATENT AND TRADEMARK OFFICE

COMMISSIONER FOR PATENTS
UNITED STATES PATENT AND TRADEMARK OFFICE
P.O. Box 1450
ALEXANDRIA, VA 22313-1450
www.uspto.gov

DERGOSITS & NOAH LLP
THREE EMBARCADERO CENTER, SUITE 410
San Francisco CA 94111

MAILED

JUN 1 1 2010

OFFICE OF PETITIONS

In re Application of
Deshpande, et al.
Application No. 12/187,637
Filed: August 7, 2008
Atty. Dkt. No.: AM13195/CMP/MG

: DECISION ON PETITION

This decision is in response to the petition under 37 CFR 1.137(b), filed April 27, 2010.

The application became abandoned January 2, 2010 for failure to timely submit a proper reply to the non-final Office action mailed October 1, 2009. The non-final Office action set a three month shortened statutory period of time for reply. No petition for extension of time under 37 CFR 1.136(a) was filed. Notice of Abandonment was mailed April 23, 2010.

A grantable petition pursuant to 37 C.F.R. § 1.137(b) must be accompanied by: (1) the required reply to the outstanding Office action or notice, unless previously filed; (2) the petition fee as set forth in 37 C.F.R. § 1.17(m); (3) a statement that the entire delay in filing the required reply from the due date for the reply until the filing of a grantable petition pursuant to 37 C.F.R. § 1.137(b) was unintentional; and (4) any terminal disclaimer (and fee set forth in 37 C.F.R. § 1.20(d)) required pursuant to 37 C.F.R. § 1.137(c).

The instant petition fails to satisfy requirement (1) set forth above. The amendment submitted herewith is not properly signed in compliance with 37 CFR 1.33(b) in that practitioner fails to set forth his registration name. See, 37 CFR 1.33(b); 1.34; and 1283 OG 148 (June 22, 2004).

Any request for reconsideration must be accompanied by the required reply, properly signed in compliance with 37 CFR 1.33(b); 1.34; and 1283 OG 148 (June 22, 2004).

In view thereof, the petition is **DISMISSED**.

Any request for reconsideration of this decision must be submitted within TWO (2) MONTHS from the mail date of this decision. Extensions of time under 37 CFR 1.136(a) are permitted. The reconsideration request should include a cover letter entitled "Renewed Petition under 37 CFR 1.137(b)." This is **not** a final agency action within the meaning of 5 U.S.C. § 704.

Further correspondence with respect to this matter should be addressed as follows:

By Mail: Mail Stop PETITION
Commissioner for Patents
P. O. Box 1450
Alexandria, VA 22313-1450

By hand: U. S. Patent and Trademark Office
Customer Service Window, Mail Stop Petitions
Randolph Building
401 Dulany Street
Alexandria, VA 22314

The centralized facsimile number is (571) 273-8300.

Telephone inquiries concerning this decision should be directed to the undersigned at (571) 272-3205.

/ALESIA M. BROWN/

Alesia M. Brown
Petitions Attorney
Office of Petitions

UNITED STATES PATENT AND TRADEMARK OFFICE

UNITED STATES DEPARTMENT OF COMMERCE
United States Patent and Trademark Office
Address: COMMISSIONER FOR PATENTS
P.O. Box 1450
Alexandria, Virginia 22313-1450
www.uspto.gov

APPLICATION NO.	FILING DATE	FIRST NAMED INVENTOR	ATTORNEY DOCKET NO.	CONFIRMATION NO.
12/187,734	08/07/2008	Shinichi KOMINATO	330225US2	3602

7590 04/27/2010
OBLON, SPIVAK, MCCLELLAND MAIER & NEUSTADT, L.L.P.
1940 DUKE STREET
ALEXANDRIA, VA 22314

EXAMINER
ROJAS, BERNARD

ART UNIT	PAPER NUMBER
2832	

NOTIFICATION DATE	DELIVERY MODE
04/27/2010	ELECTRONIC

DECISION GRANTING PETITION UNDER 37 CFR 1.138(d)

The declaration of express abandonment is recognized

This is in response to the petition under 37 CFR 1.138(d), requesting for a refund of any previously paid search fee and excess claims fee in the above-identified application.

The petition is granted.

The express abandonment is recognized. Any previously paid search fee and excess claims fee are hereby refunded.

Telephone inquiries should be directed to the Office of Data Management at (571) 272-4200.

Patent Publication Branch
Office of Data Management

Refund Ref:
04/26/2010 [illegible]

Credit Card Refund Total: $510.00

[illegible]

Adjustment date: 04/26/2010 NFARMER
08/08/2008 INTEFSW [illegible] 12187734
02 FC:1111 -510.00 OP

FORM PET651G (Rev. 08/07)

UNITED STATES PATENT AND TRADEMARK OFFICE

Commissioner for Patents
United States Patent and Trademark Office
P.O. Box 1450
Alexandria, VA 22313-1450
www.uspto.gov

MCANDREWS HELD & MALLOY, LTD
500 WEST MADISON STREET
SUITE 3400
CHICAGO, IL 60661

MAILED

APR 21 2010

OFFICE OF PETITIONS

In re Application of
Uri Elzur
Application No. 12/187,783
Filed: August 7, 2008
Attorney Docket No. 13784US04

ON PETITION

This is a decision on the petition, filed April 19, 2010 under 37 CFR 1.313(c)(2) to withdraw the above-identified application from issue after payment of the issue fee.

The petition is **GRANTED**.

The above-identified application is withdrawn from issue for consideration of a submission under 37 CFR 1.114 (request for continued examination). See 37 CFR 1.313(c)(2).

Petitioner is advised that the issue fee paid on March 25, 2010 in the above-identified application cannot be refunded. If, however, the above-identified application is again allowed, petitioner may request that it be applied towards the issue fee required by the new Notice of Allowance.[1]

Telephone inquiries should be directed to Irvin Dingle at (571) 272-3210.

This matter is being referred to Technology Center AU 2472 for processing of the request for continued examination under 37 CFR 1.114 and for consideration of the concurrently filed Information Disclosure Statement.

/Irvin Dingle/
Irvin Dingle
Petitions Examiner
Office of Petitions

---

[1] The request to apply the issue fee to the new Notice may be satisfied by completing and returning the new Issue Fee Transmittal Form PTOL-85(b), which includes the following language thereon: Commissioner for Patents is requested to apply the Issue Fee and Publication Fee (if any) or re-apply any previously paid issue fee to the application identified above. Petitioner is advised that, whether a fee is indicated as being due or not, the Issue Fee Transmittal Form **must** be completed and timely submitted to avoid abandonment. Note the language in bold text on the first page of the Notice of Allowance and Fee(s) Due (PTOL-85).

UNITED STATES PATENT AND TRADEMARK OFFICE

Commissioner for Patents
United States Patent and Trademark Office
P.O. Box 1450
Alexandria, VA 22313-1450
www.uspto.gov

COPY MAILED

APR 06 2009

OFFICE OF PETITIONS

CHEVRON SERVICES COMPANY
LAW, INTELLECTUAL PROPERTY GROUP
P.O. BOX 4368
HOUSTON TX 77210-4368

In re Application of	:	
Farshad A. Bavarian et al.	:	
Application No. 12/187,906	:	
Filed: August 7, 2008	:	ON PETITION
Attorney Docket No. T-6709C	:	

This is in response to the petition under 37 CFR 1.47(a) filed March 19, 2009.

The petition is **DISMISSED**.

Rule 47 applicant is given TWO MONTHS from the mailing date of this decision to respond, correcting the below-noted deficiencies. Any response should be entitled "Request for Reconsideration of Petition Under 37 CFR 1.47(a)" and may include an oath or declaration executed by the inventor. **Failure to respond will result in abandonment of the application.** Any extensions of time will be governed by 37 CFR 1.136(a).

The above-identified application was filed on August 7, 2008 without a signed declaration. Accordingly, on August 20, 2008, a "Notice To File Missing Parts of Application" was mailed, requiring *inter alia* a properly executed oath or declaration.

In response, on March 19, 2009, an oath or declaration executed by all joint inventors except John Michael Brady and Dean Alan Kenefake, the instant petition under 37 CFR 1.47(a) and a five month extension of time was filed. The petition argues that joint inventor Brady cannot be found or reached after diligent effort or refuses to join in the application.

A grantable petition under 37 CFR 1.47(a) requires:

(1) proof that the non-signing inventor cannot be reached or refuses to sign the oath or declaration after having been presented with the application papers (specification, claims and drawings);

(2) an acceptable oath or declaration in compliance with 35 U.S.C. §§ 115 and 116;

(3) the petition fee;

(4) a statement of the last known address of the non-signing inventor;

This petition lacks compliance with items (1) and (2).

In regards to item (1), petitioner has not provided sufficient proof that a copy of the instant application (specification including claims, drawings, if any, and the Declaration) was sent or given to the non-signing inventor[1], only that a copy of the Combined Declaration and Power of Attorney for the parent application (11/956,440) was sent to joint inventor Brady.

Before a refusal can be alleged, petitioners must demonstrate that the non-signing inventor was sent or given a copy of the application papers. Petitioners must provide proof that the inventor refused to sign the declaration after being sent or given a copy of the application papers. If there is a written refusal, petitioners must provide a copy thereof with any renewed petition. If the refusal was made orally to a person, then that person must provide details of the refusal in an affidavit or declaration of facts.

Petitioner should submit a copy of the cover letter transmitting the application papers for the instant application to the non-signing inventor or details given in an affidavit or declaration of facts by a person with first-hand knowledge of the details.

As to item (2), an oath or declaration for the patent application in compliance with 37 CFR 1.63 and 1.64 has not been presented. While the Declaration filed with the instant application also lists Dean Alan Kenefake as a joint inventor, the Declaration is not signed and neither has evidence been presented that joint inventor Dean Alan Kenefake either cannot be reached or refuses to sign the oath or declaration after having been presented with the application papers (specification, claims and drawings).

A declaration in compliance with 37 CFR 1.63, 1.64, and 1.67 must therefore be presented, signed by all of the signing inventors, if any. If no inventor(s) will sign the declaration, the declaration may be signed on behalf of the inventor by an assignee. The oath or declaration must be signed by an officer of the corporation (president, vice president, secretary, or treasurer) on behalf of and as agent for the non-signing inventor(s). The office must identify his/her title in the declaration, as well as his/her mailing address, residence, if the applicant lives at a different location from where he or she customarily receives mail, as well as the citizenship of individual signing on behalf of the non-signing inventor. If the oath or declaration is not signed by an officer of the corporation, then proof of authority of the person signing on behalf of the corporation must be submitted.[2]

---

[1]MPEP 409.03(d).

[2]MPEP 409.03(b).

Further correspondence with respect to this matter should be addressed as follows:

By mail: Mail Stop Petition
Commissioner for Patents
P.O. Box 1450
Alexandria, VA 22313-1450

By FAX: (571) 273-8300
Office of Petitions

Telephone inquiries concerning this matter may be directed to the undersigned Petitions Attorney at (517) 272-3212.

Patricia Faison-Ball

Patricia Faison-Ball
Senior Petitions Attorney
Office of Petitions

UNITED STATES PATENT AND TRADEMARK OFFICE

Commissioner for Patents
United States Patent and Trademark Office
P.O. Box 1450Alexandria, VA 22313-1450
www.uspto.gov

CHEVRON SERVICES COMPANY
LAW, INTELLECTUAL PROPERTY GROUP
P.O. BOX 4368
HOUSTON TX 77210-4368

MAILED

JUN 19 2009

OFFICE OF PETITIONS

In re Application of	:
Farshad A. Bavarian et al.	:DECISION NOTING JOINDER OF
Application No. 12/187,906	: INVENTOR AND PETITION UNDER
Filed: August 7, 2008	: **37 CFR 1.47(a) DISMISSED** AS
Attorney Docket No. T-6709C	: INVOLVING MOOT ISSUES

This is in response to the request for reconsideration filed June 4, 2009 under 37 CFR 1.47(a)

The above-identified application was filed on August 7, 2008 without a signed declaration. Accordingly, on August 20, 2008, a "Notice To File Missing Parts of Application" was mailed, requiring *inter alia* a properly executed oath or declaration. In response, on March 19, 2009, an oath or declaration executed by all joint inventors except John Michael Brady and Dean Alan Kenefake, the instant petition under 37 CFR 1.47(a) and a five month extension of time was filed. The petition argued that joint inventor Brady could not be found or reached after diligent effort or that he refused to join in the application.

The petition was dismissed in a decision mailed April 6, 2009 because petitioner had not submitted sufficient evidence to prove that a copy of the application was sent or given to non-signing inventor Brady or that diligent efforts had been employed to locate the non-signing inventor. No argument was offered for the failure to include a signed declaration by joint inventor Kenefake.

On June 4, 2009, papers filed included a declaration signed by joint inventors Brady and Kenefake in compliance with 37 CFR 1.63.

In view of the joinder of the previously non-signing joint inventors, further consideration under 37 CFR 1.47(a) is unnecessary.

The renewed petition filed June 4, 2009 is **DISMISSED** as involving moot issues.

Since the instant petition is a renewed petition, no additional petition fees are due.

This application does not have any rule 1.47(a) status and no such status should appear on the file wrapper. This application need not be returned to this office for any further consideration under 37 CFR 1.47(a).

This matter will be referred to the Office of Patent Application Processing for further pre-examination processing.

Telephone inquiries related to this decision should be directed to the undersigned Petitions Attorney at (571) 272-3212.

Patricia Faison-Ball

Patricia Faison-Ball
Senior Petitions Attorney
Office of Petitions

UNITED STATES PATENT AND TRADEMARK OFFICE

Commissioner for Patents
United States Patent and Trademark Office
P.O. Box 1450
Alexandria, VA 22313-1450
www.uspto.gov

THE FARRELL LAW FIRM, LLP
290 BROADHOLLOW ROAD, SUITE 210E
MELVILLE, NY 11747

COPY MAILED

AUG 2 4 2009

OFFICE OF PETITIONS

In re Application of	:	
Hyun-Jeong KANG, et al.	:	
Application No. 12/187,915	:	DECISION GRANTING PETITION
Filed: August 7, 2008	:	UNDER 37 CFR 1.313(c)(2)
Attorney Docket No. **678-2199 CON**	:	

This is a decision on the petition under 37 CFR 1.313(c)(2), filed August 21, 2009, to withdraw the above-identified application from issue after payment of the issue fee.

The petition is **GRANTED**.

The above-identified application is withdrawn from issue for consideration of a submission under 37 CFR 1.114 (request for continued examination). *See* 37 CFR 1.313(c)(2).

Petitioner is advised that the issue fee paid on August 6, 2009 cannot be refunded. If, however, this application is again allowed, petitioner may request that it be applied towards the issue fee required by the new Notice of Allowance.[1]

Telephone inquiries should be directed to the undersigned at (571) 272-7253.

This application is being referred to Technology Center AU 2617 for processing of the request for continued examination under 37 CFR 1.114 and for consideration of the concurrently filed information disclosure statement.

/Monica A. Graves/
Petitions Examiner, Office of Petitions

---

[1] *The request to apply the issue fee to the new Notice may be satisfied by completing and returning the new Part B – Fee(s) Transmittal Form (along with any balance due at the time of submission). Petitioner is advised that the Issue Fee Transmittal Form* ***must*** *be completed and timely submitted to avoid abandonment of the application.*

UNITED STATES PATENT AND TRADEMARK OFFICE

UNITED STATES DEPARTMENT OF COMMERCE
United States Patent and Trademark Office
Address: COMMISSIONER FOR PATENTS
P.O. Box 1450
Alexandria, Virginia 22313-1450
www.uspto.gov

THE FARRELL LAW FIRM, LLP
290 Broadhollow Road
Suite 210E
Melville, NY 11747

Mail Date: 05/21/2010

Applicant	: Hyun-Jeong KANG	: DECISION ON REQUEST FOR
Patent Number	: 7653022	: RECALCULATION of PATENT
Issue Date	: 01/26/2010	: TERM ADJUSTMENT IN VIEW
Application No	: 12/187,915	: OF WYETH AND NOTICE OF INTENT TO
Filed	: 08/07/2008	: ISSUE CERTIFICATE OF CORRECTION
		:

The Request for Recalculation is **GRANTED** to the extent indicated.

The patent term adjustment has been determined to be **0** days. The USPTO will *sua sponte* issue a certificate of correction reflecting the amount of PTA days determined by the recalculation.

Prior to the issuance of the certificate of correction, the USPTO will afford patentee an opportunity to be heard and request reconsideration. Accordingly, patentee has **one month or thirty (30) days**, whichever is longer, to file a request for reconsideration of this patent term adjustment calculation. See 35 U.S.C. 154(b)(3)(B)(ii) and 37 CFR 1.322(a)(4). No extensions of time will be granted under 37 CFR 1.136.

Patentee should use document code PET.OP if electronically filing a request for reconsideration of this patent term adjustment calculation. The patentee must also include the information required by 37 CFR 1.705(b)(2) and the fee required by 37 CFR 1.18(e). If patentee does not file a timely request for reconsideration of this patent term adjustment calculation including the information required by 37 CFR 1.705(b)(2) and the fee required by 37 CFR 1.18(e), the USPTO will issue a certificate of correction reflecting the PTA determination noted above.

Patentee should be aware that in order to preserve the right to review in the United States District Court for the District of Columbia of the USPTO patent term adjustment determination, patentee must ensure that he or she also take the steps required under 35 U.S.C. 154(b)(4)(A) in a timely manner. Nothing in the request for recalculation should be construed as providing an alternative time frame for commencing a civil action under 35 U.S.C. 154(b)(4)(A).

Any questions concerning this decision should be directed to the Office of Patent Legal Administration at 571-272-7702.

UNITED STATES PATENT AND TRADEMARK OFFICE

Commissioner for Patents
United States Patent and Trademark Office
P.O. Box 1450
Alexandria, VA 22313-1450
www.uspto.gov

COPY MAILED

DEC 0 5 2008

OFFICE OF PETITIONS

FITZPATRICK CELLA HARPER & SCINTO
30 ROCKEFELLER PLAZA
NEW YORK NY 10112

In re Application of
Mikac, et al.
Application No.: 12/187,916
Filed: August 7, 2008
Attorney Docket No.: 00034.005160.

ON PETITION

This is a decision on the petition under 37 CFR 1.47(a), filed October 17, 2008.

The petition is **DISMISSED**.

Any request for reconsideration of this decision must be submitted within TWO (2) MONTHS from the mail date of this decision. Extensions of time under 37 CFR 1.136(a) are permitted. Any response should be entitled "Request for Reconsideration of Petition Under 37 CFR 1.47(a)" and may include an oath or declaration executed by the inventor. **Failure to respond will result in abandonment of the application.**

A grantable petition under 37 CFR 1.47(a) requires:

(1) a petition including proof of the pertinent facts establishing that the joint inventor(s) refuses to join, or cannot be found or reached after diligent effort,
(2) a proper oath or Declaration executed by the available joint inventor(s),
(3) the petition fee of $200, and
(4) the last known address of the omitted inventor(s).

This petition lacks item (1) above.

As to item (1), applicant has failed to establish that Mr. Strain has constructively refused to join in the filing of the above-identified application.

The Office requires that the non-signing inventor be provided with a complete copy of the application as filed. This includes the specification with claims, drawings, if any, and a declaration. See MPEP 409.03(d). Joyce Peluso's statement of facts does not establish that a complete copy of the application was presented to Mr. Strain.

Mr. Strain must have the complete application in his possession in order to make an informed decision as to whether he joins in its filing. When petitioner can show that Mr. Strain was mailed or

received the complete application and that he either refused to sign the declaration or would not respond to the request that he sign the declaration within a reasonable amount of time, petitioner will have satisfied this requirement.

Further correspondence with respect to this matter should be addressed as follows:

By mail: Mail Stop PETITION
Commissioner for Patents
Post Office Box 1450
Alexandria, VA 22313-1450

By hand: U.S. Patent and Trademark Office
Customer Service Window, Mail Stop Petition
Randolph Building
401 Dulany Street
Alexandria, VA 22314

By FAX: (571) 273-8300 - ATTN: Office of Petitions

Telephone inquiries should be directed to the undersigned at (571) 272-3230.

Shirene Willis Brantley
Senior Petitions Attorney
Office of Petitions

UNITED STATES PATENT AND TRADEMARK OFFICE

Commissioner for Patents
United States Patent and Trademark Office
P.O. Box 1450
Alexandria, VA 22313-1450
www.uspto.gov

FITZPATRICK CELLA HARPER & SCINTO
30 ROCKEFELLER PLAZA
NEW YORK NY 10112

MAILED

FEB 27 2009

OFFICE OF PETITIONS

In re Application of :
Mikac, et al. : ON PETITION
Application No.: 12/187,916 :
Filed: August 7, 2008 :
Attorney Docket No.: 00034.005160. :

This is a decision on the reconsideration petition under 37 CFR 1.47(a), filed February 3, 2009.

The petition is **GRANTED**.

Petitioner has shown that the non-signing inventor, Dale Robert Strain, has refused to join in the filing of the above-identified application.

The application and papers have been reviewed and found in compliance with 37 CFR 1.47(a). This application is hereby accorded Rule 1.47(a) status.

As provided in 37 CFR 1.47(c), this Office will forward notice of this application's filing to the non-signing inventor at the address given in the petition. Notice of the filing of this application will also be published in the Official Gazette.

This application is being referred to the Office of Patent Application Processing for further pre-examination processing.

Telephone inquiries should be directed to the undersigned at (571) 272-3230.

Shirene Willis Brantley
Senior Petitions Attorney
Office of Petitions

UNITED STATES PATENT AND TRADEMARK OFFICE

Commissioner for Patents
United States Patent and Trademark Office
P.O. Box 1450
Alexandria, VA 22313-1450
www.uspto.gov

DALE ROBERT STRAIN
5583 WATERS BEND DRIVE
BELVIDERE IL 61008

MAILED

FEB 27 2009

OFFICE OF PETITIONS

In re Application of
Mikac, et al.
Application No.: 12/187,916
Filed: August 7, 2008
Attorney Docket No.: 00034.005160

LETTER

Dear Mr. Strain:

You are named as a joint inventor in the above-identified United States patent application, filed under the provisions of 35 U.S.C. 116 (United States Code), and 37 CFR 1.47(a), Rules of Practice in Patent Cases. Should a patent be granted on the application you will be designated therein as a joint inventor.

As a named inventor you are entitled to inspect any paper in the file wrapper of the application, order copies of all or any part thereof (at a prepaid cost per 37 CFR 1.19) or make your position of record in the application. Alternatively, you may arrange to do any of the preceding through a registered patent attorney or agent presenting written authorization from you. If you care to join the application, counsel of record (see below) would presumably assist you. Joining the application would entail the filing of an appropriate oath or declaration by you pursuant to 37 CFR 1.63.

Telephone inquiries regarding this communication should be directed to the undersigned at (571) 272-3230. Requests for information regarding your application should be directed to the File Information Unit at (703) 308-2733. Information regarding how to pay for and order a copy of the application, or a specific paper in the application, should be directed to the Certification Division at (571) 272-3150 or 1 (800) 972-6382 (outside the Washington, DC area).

Shirene Willis Brantley

Shirene Willis Brantley
Senior Petitions Attorney
Office of Petitions

ATTORNEYS OF RECORD: FITZPATRICK CELLA HARPER & SCINTO
30 ROCKEFELLER PLAZA
NEW YORK NY 10112

UNITED STATES PATENT AND TRADEMARK OFFICE

UNITED STATES DEPARTMENT OF COMMERCE
United States Patent and Trademark Office
Address: COMMISSIONER FOR PATENTS
P.O. Box 1450
Alexandria, Virginia 22313-1450
www.uspto.gov

DICKSTEIN SHAPIRO LLP
1633 Broadway
NEW YORK, NY 10019

Mail Date: 04/20/2010

Applicant	: Ryoko Katayama	: DECISION ON REQUEST FOR
Patent Number	: 7585429	: RECALCULATION of PATENT
Issue Date	: 09/08/2009	: TERM ADJUSTMENT IN VIEW
Appliction No	: 12/187,919	: OF WYETH
Filed	: 08/07/2008	:
		:

The Patentee's Request for Recalculation is **DISMISSED.**

This Request is deemed ineligible for consideration for one or more of the following reasons:

(A). The patent for which PTA recalculation is requested is either a design or reissue application or is a reexamination proceeding;

(B). The patent for which PTA recalculation is requested resulted from a utility or plant application filed under 35 USC 111(a) before May 29, 2000 and no CPA filed in the application on/after May 29, 2000;

(C). The patent for which PTA recalculation is requested resulted from an international application in which the international filing date was before May 29, 2000 and no CPA filed in the application on/after May 29, 2000;

(D). The patent for which PTA recalculation is requested issued on/after March 2, 2010;

(E). The Request for Recalculation was filed more than 180 days after the grant date of the patent and the request was not filed within two months of a dismissal of a request for reconsideration of the of the patent term under 37 CFR 1.705(d);

(F). The Request for Recalculation is not solely limited to USPTO pre-Wyeth interpretation of 35 U.S.C. 154(b)(2)(A);

or

(G). A civil action was filed pursuant to 35 U.S.C. 154(b)(4)(A)concerning the same patent at issue in this request.

Patentee may file a reply to this decision dismissing the Request for Recalculation. Patentee must file such reply within one month or thirty days, whichever is longer, of the mail date of the decision dismissing the Request for Recalculation. No fee is required if patentee is asserting in the reply that the dismissal for ineligibility is improper.

Patentee should use document code PET.OP if electronically filing a reply to this dismissal. If the USPTO finds that the request was improperly deemed ineligible, the USPTO will mail applicant a recalculation determination.

Patentee should be aware that in order to preserve the right to review in the United States District Court for the District of Columbia of the USPTO patent term adjustment determination, patentee must ensure that he or she also take the steps required under 35 U.S.C. 154(b)(4)(A). Nothing in the request for recalculation should be construed as providing an alternative time frame for commencing a civil action under 35 U.S.C. 154 (b)(4)(A).

Any questions concerning this decision should be directed to the Office of Patent Legal Administration at 571-272-7702.

UNITED STATES PATENT AND TRADEMARK OFFICE

Commissioner for Patents
United States Patent and Trademark Office
P.O. Box 1450
Alexandria, VA 22313-1450
www.uspto.gov

MAIL

APR 01 2009

DIRECTOR'S OFFICE
TECHNOLOGY CENTER 2600

TOWNSEND AND TOWNSEND AND CREW, LLP
TWO EMBARCADERO CENTER
EIGHTH FLOOR
SAN FRANCISCO CA 94111-3834

In re Application of AOKI, HIROSHI, et al. Application No. 12/187,922 Filed: August 07, 2008 Attorney Docket No. **16869P-072420US**	: : : : : : :	DECISION ON REQUEST TO PARTICIPATE IN PATENT PROSECUTION HIGHWAY PROGRAM AND PETITION TO MAKE SPECIAL UNDER 37 CFR 1.102(d)

This is a decision on the request to participate in the Patent Prosecution Highway (PPH) program and the petition under 37 CFR 1.102(d), filed February 06, 2009, to make the above-identified application special.

The request and petition are **GRANTED**.

A grantable request to participate in the PPH program and petition to make special require:

(1) The U.S. application must validly claim priority under 35 U.S.C. 119(a) to one or more applications filed in the JPO;
(2) Applicant must submit a copy of the allowable/patentable claim(s) from the JPO application(s) along with an English translation thereof and a statement that the English translation is accurate;
(3) All the claims in the U.S. application must sufficiently correspond or be amended to sufficiently correspond to the allowable/patentable claim(s) in the JPO application(s);
(4) Examination of the U.S. application has not begun;
(5) Applicant must submit a copy of all the office actions from each of the JPO application(s) containing the allowable/patentable claim(s) along with an English translation thereof and a statement that the English translation is accurate;
(6) Applicant must submit an IDS listing the documents cited by the JPO examiner in the JPO office action along with copies of documents except U.S. patents or U.S. patent application publications; and
(7) The required petition fee under 37 CFR 1.17(h).

The request to participate in the PPH program and petition comply with the above requirements. Accordingly, the above-identified application has been accorded "special" status.

Telephone inquiries concerning this decision should be directed to Kenneth Wieder at 571-272-2986.

All other inquiries concerning the examination or status of the application should be directed to Patent Application Information Retrieval (PAIR) system.

The application is being forwarded to the examiner for action on the merits commensurate with this decision.

Kenneth Wieder
Quality Assurance Specialist
Technology Center 2600
Communications

UNITED STATES PATENT AND TRADEMARK OFFICE

Commissioner for Patents
United States Patent and Trademark Office
P.O. Box 1450
Alexandria, VA 22313-1450
www.uspto.gov

TROUTMAN SANDERS LLP
600 PEACHTREE STREET, NE
ATLANTA GA 30308

COPY MAILED

SEP 02 2008

In re Application of	:	
BOYD, Joseph J.	:	
Application No. 12/187,940	:	DECISION ON PETITION
Filed: August 07, 2008	:	TO MAKE SPECIAL UNDER
Attorney Docket No. **BOY9**	:	37 CFR 1.102(c)(1)
	:	

This is a decision on the petition under 37 CFR 1.102(c)(1), filed August 07, 2008, to make the above-identified application special based on applicant's age as set forth in M.P.E.P. § 708.02, Section IV.

The petition is **GRANTED**.

A grantable petition to make an application special under 37 CFR 1.102(c)(1) and MPEP § 708.02, Section IV: Applicant's Age must be accompanied by evidence showing that at least one of the applicants is 65 years of age, or more, such as a birth certificate or a statement by applicant. No fee is required

The instant petition includes a statement attesting that Joseph J. Boyd is over 65 years of age. Accordingly, the above-identified application has been accorded "special" status.

Telephone inquiries concerning this decision should be directed to Michelle R. Eason at 571-272-4231.

All other inquiries concerning either the examination or status of the application should be directed to the Technology Center.

This application is being referred to the Office of Patent Application Processing to await a reply to the Notice to File Corrected Application Papers (Notice) mailed August 28, 2008. This application will be accorded "special" status when pre-examination processing is done.

Michelle R. Eason
Paralegal Specialist
Office of Petitions

UNITED STATES PATENT AND TRADEMARK OFFICE

Commissioner for Patents
United States Patent and Trademark Office
P.O. Box 1450
Alexandria, VA 22313-1450
www.uspto.gov

COOLEY GODWARD KRONISH LLP
ATTN: PATENT GROUP
SUITE 1100
777 6TH STREET NW
WASHINGTON DC 20001

COPY MAILED

AUG 2 7 2008

OFFICE OF PETITIONS

In re Application of	:	
John F. KRUMME et al.	:	
Application No. 12/187,964	:	DECISION ON PETITION
Filed: August 07, 2008	:	TO MAKE SPECIAL UNDER
Attorney Docket No. **101658.0001US4**	:	37 CFR 1.102(c)(1)
	:	

This is a decision on the petition under 37 CFR 1.102(c)(1), filed August 07, 2008 to make the above-identified application special based on applicant's age as set forth in M.P.E.P. § 708.02, Section IV.

The petition is **GRANTED**.

A grantable petition to make an application special under 37 CFR 1.102(c)(1) and MPEP § 708.02, Section IV: Applicant's Age, must be accompanied by evidence showing that at least one of the applicants is 65 years of age, or more, such as a birth certificate or a statement by applicant. No fee is required.

The evidence submitted with the instant petition is a copy of John Krumme's passport indicating that he is at least 65 years of age. Accordingly, the above-identified application has been accorded "special" status.

Telephone inquiries concerning this decision should be directed to Tredelle Jackson at 571-272-2783.

All other inquiries concerning either the examination or status of the application should be directed to the Technology Center.

This application is being referred to the Office of Patent Application Processing. This application will be accorded "special" status when pre-examination processing is done

Tredelle D. Jackson
Paralegal Specialist
Office of Petitions

UNITED STATES PATENT AND TRADEMARK OFFICE

Commissioner for Patents
United States Patent and Trademark Office
P.O. Box 1450
Alexandria, VA 22313-1450
www.uspto.gov

MAILED

OCT 08 2008

TECHNOLOGY CENTER 2100

CARRIER BLACKMAN AND ASSOCIATES
24101 NOVI ROAD
SUITE 100
NOVI MI 48375

In re Application of: KIDO et al.
Application No. 12/187,973
Filed: August 7, 2008
For: SERVER CERTIFICATE ISSUING SYSTEM

DECISION ON REQUEST TO PARTICIPATE IN PATENT PROSECUTION HIGHWAY PILOT PROGRAM AND PETITION TO MAKE SPECIAL UNDER 37 CFR 1.102(d)

This is a decision on the request to participate in the Patent Prosecution Highway (PPH) program and the petition under 37 CFR 1.102(d), filed August 8, 2008, to make the above-identified application special.

The request and petition are **GRANTED**.

A grantable request to participate in the PPH pilot program and petition to make special require:

(1) The U.S. application must validly claim priority under 35 U.S.C. 119(a) to one or more applications filed in the JPO;

(2) Applicant must submit a copy of the allowable/patentable claim(s) from the JPO application(s) along with an English translation thereof and a statement that the English translation is accurate;

(3) All the claims in the U.S. application must sufficiently correspond or be amended to sufficiently correspond to the allowable/patentable claim(s) in the JPO application(s);

(4) Examination of the U.S. application has not begun;

(5) Applicant must submit a copy of all the office actions from each of the JPO application(s) containing the allowable/patentable claim(s) along with an English translation thereof and a statement that the English translation is accurate;

(6) Applicant must submit an IDS listing the documents cited by the JPO examiner in the JPO office action along with copies of documents except U.S. patents or U.S. patent application publications; and

(7) The required petition fee under 37 CFR 1.17(h).

The request to participate in the PPH pilot program and petition are found to comply with the above requirements. Accordingly, the above-identified application has been accorded "special" status.

Telephone inquiries concerning this decision should be directed to Mano Padmanabhan at 571-272-4210.

All other inquiries concerning the examination or status of the application is accessible in the PAIR system at http://www.uspto.gov/ebc/index.html.

The application is being forwarded to the examiner for action on the merits commensurate with this decision.

/Mano Padmanabhan/

Mano Padmanabhan
Quality Assurance Specialist, Technology Center 2100, Workgroup 2180
571-272-4210

UNITED STATES PATENT AND TRADEMARK OFFICE

Commissioner for Patents
United States Patent and Trademark Office
P.O. Box 1450
Alexandria, VA 22313-1450
www.uspto.gov

In re Application of
Tore Turney

Application No. 12187980

Filed: August 7,2008

Attorney Docket No. 262611

:DECISION ON PETITION TO MAKE SPECIAL
:UNDER 37 CFR 1.102(c)(1)

This is a decision on the electronic petition under 37 CFR 1.102 (c)(1), filed 25-SEP-2009 to make the above-identified application special based on applicant's age as set forth in MPEP § 708.02, Section IV.

The petition is **GRANTED**.

A grantable petition to make an application special under 37 CFR 1.102(c)(1), MPEP § 708.02, Section IV: Applicant's Age must include a statement by applicant or a registered practitioner having evidence that applicant is at least 65 years of age. No fee is required.

Accordingly, the above-identified application has been accorded "special" status and will be taken up for action by the examiner upon the completion of all pre-examination processing.

Telephone inquiries concerning this electronic decision should be directed to the Electronic Business Center at 866-217-9197.

All other inquiries concerning either the examination or status of the application should be directed to the Technology Center.

UNITED STATES PATENT AND TRADEMARK OFFICE

UNITED STATES DEPARTMENT OF COMMERCE
United States Patent and Trademark Office
Address: COMMISSIONER FOR PATENTS
P.O. Box 1450
Alexandria, Virginia 22313-1450
www.uspto.gov

INTELLECTUAL PROPERTY MANAGEMENT
BOEING MANAGEMENT COMPANY
P.O. BOX 2515
MAIL CODE 110-SD54
SEAL BEACH, CA 90740-1515

Mail Date: 04/20/2010

Applicant	: Paul H. Shelley	: DECISION ON REQUEST FOR
Patent Number	: 7645991	: RECALCULATION of PATENT
Issue Date	: 01/12/2010	: TERM ADJUSTMENT IN VIEW
Appliction No	: 12/188,016	: OF WYETH AND NOTICE OF INTENT TO
Filed	: 08/07/2008	: ISSUE CERTIFICATE OF CORRECTION
		:

The Request for Recalculation is **GRANTED** to the extent indicated.

The patent term adjustment has been determined to be **41** days. The USPTO will *sua sponte* issue a certificate of correction reflecting the amount of PTA days determined by the recalculation.

Prior to the issuance of the certificate of correction, the USPTO will afford patentee an opportunity to be heard and request reconsideration. Accordingly, patentee has **one month or thirty (30) days**, whichever is longer, to file a request for reconsideration of this patent term adjustment calculation. See 35 U.S.C. 154(b)(3)(B)(ii) and 37 CFR 1.322(a)(4). No extensions of time will be granted under 37 CFR 1.136.

Patentee should use document code PET.OP if electronically filing a request for reconsideration of this patent term adjustment calculation. The patentee must also include the information required by 37 CFR 1.705(b)(2) and the fee required by 37 CFR 1.18(e). If patentee does not file a timely request for reconsideration of this patent term adjustment calculation including the information required by 37 CFR 1.705(b)(2) and the fee required by 37 CFR 1.18(e), the USPTO will issue a certificate of correction reflecting the PTA determination noted above.

Patentee should be aware that in order to preserve the right to review in the United States District Court for the District of Columbia of the USPTO patent term adjustment determination, patentee must ensure that he or she also take the steps required under 35 U.S.C. 154(b)(4)(A) in a timely manner. Nothing in the request for recalculation should be construed as providing an alternative time frame for commencing a civil action under 35 U.S.C. 154(b)(4)(A).

Any questions concerning this decision should be directed to the Office of Patent Legal Administration at 571-272-7702.

UNITED STATES PATENT AND TRADEMARK OFFICE

Commissioner for Patents
United States Patent and Trademark Office
P.O. Box 1450
Alexandria, VA 22313-1450
www.uspto.gov

LATHROP & GAGE LLP
4845 PEARL EAST CIRCLE
WUITE 201
VOULDER CO 80301

COPY MAILED
JAN 2 6 2010

Applicant: Alan R. Mickelson, et al.
Appl. No.: 12/188,050
Filing Date: August 7, 2008
Title: SUBMICRON STRUCTURES IN DYE-DOPED POLYMER MATERIALS
Attorney Docket: 483372
Pub. No.: US 2009/0040579 A1
Pub. Date: February 12, 2009

This is a decision on the request for a corrected patent application publication under 37 CFR 1.221(b), received on April 13, 2009 for the above-identified application.

The request is DISMISSED.

Applicant requests that the application be republished because the patent application publication contains multiple material errors in optical character recognition errors within the application.

37 CFR 1.221 (b) is applicable "only when the Office makes a material mistake which is apparent from Office records.... Any request for a corrected publication or revised patent application publication other than provided as provided in paragraph (a) of this section must be filed within two months from the date of the patent application publication. This period is not extendable." A material mistake must affect the public's ability to appreciate the technical disclosure of the patent application publication, to determine the scope of the patent application publication, or to determine the scope of the provisional rights that an applicant may seek to enforce upon issuance of a patent. [1]

The error in publication wherein "moiré grating" is misprinted as "moirégrating" in a few instances and wherein the symbol for "Λ" is misprinted as "λ" in a few instances may be Office errors, but they are not material Office errors under 37 CFR 1.221. The errors do not affect the understanding of the application, as the correct text also appears and the description is under the formulas. The mistakes do not affect the public's ability to appreciate the technical disclosure of the patent application publication, or determine the scope of the patent application publication or

[1] Changes to Implement Eighteen-Month Publication of Patent Applications, 65 FR 57023, 57038 (Sept. 20, 2000), 1239, Off. Gaz. Pat. Office Notices 63, 75 (Oct. 10, 2000) (final rule).

determine the scope of the provisional rights that an applicant may seek to enforce upon issuance of a patent.

Furthermore, the errors are due to the quality and size of the text, which makes it difficult to electronically reproduce by digital imaging and optical character recognition. See 37 CFR 1.52(a)(1)(v), which states that all papers that are to become a permanent part of Office records must be presented "in a form having sufficient clarity and contrast between the paper and the writing to permit... electronic capture by use of digital imaging and optical character recognition." As set forth at MPEP 1121, "applications with poor quality text, which may be acceptable for scanning and examination purposes, may lead to errors in the patent application publication. Correction of these errors and inclusion of any desired amendments into the text of the originally-filed specification and drawings will only occur if applicant files a request for republication under 37 CFR 1.221(a). They will not be corrected by the Office in a corrected publication under 37 CFR 1.221(b)."

The applicant is advised that a "request for republication of an application previously published" may be filed under 37 CFR 1.221 (a). Such a request for republication "must include a copy of the application compliance with the Office's electronic filing system requirements and be accompanied by the publication fee set forth in § 1.18 (d) and the processing fee set forth in § 1.17 (i)." If the request for republication does not comply with the electronic filing system requirements, the republication will not take place and the publication fee set forth in § 1.18 (d) will be refunded. The processing fee will be retained.

A guide for filing a request for a Pre-Grant Publication, such as a request for republication, may be found on the link below:

http://www.uspto.gov/ebc/portal/tutorials.htm

Any request for republication under 37 CFR 1.221(a), must be submitted via the EFS system, as a "Pre-Grant Publication".

Inquiries relating to this matter may be directed to Mark Polutta at (571) 272-7709.

Mark Polutta
Senior Legal Advisor
Office of Patent Legal Administration
Office of the Deputy Commissioner
for Patent Examination Policy

UNITED STATES PATENT AND TRADEMARK OFFICE

Commissioner for Patents
United States Patent and Trademark Office
P.O. Box 1450
Alexandria, VA 22313-1450
www.uspto.gov

GREENBERG TRAURIG LLP (LA)
2450 COLORADO AVENUE, SUITE 400E
INTELLECTUAL PROPERTY DEPARTMENT
SANTA MONICA CA 90404

SEP 22 2008

In re Application of: Van de Rostyne et al. Serial No.: 12/188,070 Filed: August 7, 2008 Title: FLYING OBJECT WITH TANDEM ROTORS	DECISION ON PETITION TO MAKE SPECIAL FOR NEW APPLICATION UNDER 37 C.F.R. § 1.102 & M.P.E.P. § 708.02

This is a decision on the petition filed on August 7, 2008 to make the above-identified application special for accelerated examination procedure under 37 C.F.R. § 1.102(d).

The petition to make the application special is **DENIED**.

REGULATION AND PRACTICE

To be eligible for accelerated examination under 37 C.F.R. § 1.102(d) and pursuant to the "Change to Practice for Petitions in Patent Applications to Make Special and for Accelerated Examination" published in the Federal Register on June 26, 2006 (71 Fed. Reg. 36323), the following conditions must be satisfied:

1. The application must be a non-reissue utility or design application filed under 37 CFR 1.111(a);
2. The application, the petition and the required fees must be filed electronically using the USPTO's electronic filing system (EFS), or EFS-web; if not filed electronically, a statement asserting that EFS and EFS-web were not available during the normal business hours;
3. The application, at the time of filing, must be complete under 37 CFR 1.51 and in condition for examination;
4. The application must contain three or fewer independent claims and twenty or fewer total claims and the claims must be directed to a single invention.
5. The petition must be filed with the application.

The application as filed is not eligible for the accelerated examination under 37 C.F.R. § 1.102(d) because the application the application, at the time of filing, was not complete under 37 CFR 1.51 and in condition for examination, as evidenced by the mailing of the Notice to File Corrected Application Papers on August 13, 2008. See 71 Fed. Reg. 36323 notice, section VIII, Conditions for Examination. The opportunity to perfect a petition does not apply to applications that are not in condition for examination on filing. In particular, it is expected the drawings at filing to be in compliance with 37 CFR 1.84: notice, section VIII (F).

As noted in the policy statement referenced above, any petition to make special filed on or after the effective date must meet the new requirements set forth in the 71 Fed. Reg. 36323 notice.

For the above-stated reasons, the petition for Accelerated Examination, as set forth in MPEP 708.02(a) is **DENIED**.

Any inquiry regarding this decision should be directed to J. Harrison, TC 3700 Special Program Examiner, at (571) 272-4449.

J. Harrison
Special Program Examiner
Technology Center 3700

UNITED STATES PATENT AND TRADEMARK OFFICE

Commissioner for Patents
United States Patent and Trademark Office
P.O. Box 1450
Alexandria, VA 22313-1450
www.uspto.gov

MAILED

NOV 27 2009

OFFICE OF PETITIONS

OSHA LIANG L.L.P.
TWO HOUSTON CENTER
909 FANNIN, SUITE 3500
HOUSTON, TX 77010

Applicants: Shinichiro Okamura, et al.
Appl. No.: 12/188,108
Filing Date: August 7, 2008
Title: INTEGRATED ANTENNA WITH IDENTICAL GROUND MEMBER
Attorney Docket: 15115/171001
Pub. No.: US 2009/0040114 A1
Pub. Date: February 12, 2009

This is a decision on the request for a corrected patent application publication under 37 CFR 1.221(b), received on April 3, 2009, for the above-identified application.

The request is granted.

The corrected patent application publication will be published in due course, unless the patent issues before the application is republished.

Inquiries relating to this matter may be directed to Mark Polutta at (571) 272-7709.

Mark Polutta
Senior Legal Advisor
Office of Patent Legal Administration
Office of the Deputy Commissioner
for Patent Examination Policy

UNITED STATES PATENT AND TRADEMARK OFFICE

Commissioner for Patents
United States Patent and Trademark Office
P.O. Box 1450
Alexandria, VA 22313-1450
www.uspto.gov

MARGER JOHNSON & MCCOLLOM, P.C.
210 SW MORRISON STREET, SUITE 400
PORTLAND, OR 97204

COPY MAILED

JAN 20 2010

In re Application of :
Adam Herr, et al. :
Application No. 12/188,110 : ON PETITION
Filed: August 7, 2008 :
Attorney Docket No.: 3370-0027 :

This is a decision on the petition under 37 CFR 1.137(b), filed October 30, 2009, to revive the above-identified application.

The petition is **GRANTED**.

The application became abandoned for failure to timely respond to a Notice to File Missing Parts (Notice) mailed August 20, 2008, which set a period for reply of two (2) months. No extension of time under the provisions of 37 CFR 1.136(a) was obtained. Accordingly, the application became abandoned on October 21, 2008. A Notice of Abandonment was mailed on April 24, 2009. On October 30, 2009, the present petition was filed.

The petition satisfies the requirements of 37 CFR 1.137(b) in that petitioner has supplied (1) the reply in the form of the $82 basic filing fee, $270 search fee, $110 examination fee, replacement drawing, $65 surcharge, and a declaration under 37 CFR 1.63; (2) the petition fee of $810; and (3) an adequate statement of unintentional delay[1].

An extension of time under 37 CFR 1.136 must be filed prior to the expiration of the maximum extendable period for reply. *See* In re Application of S., 8 USPQ2d 1630, 1631 (Comm'r Pats. 1988). Since the $1,175 extension of time fee submitted with the petition on October 30, 2009 was subsequent to the maximum extendable period for reply, this fee is unnecessary and will be credited to petitioner's deposit account.

The application is being referred to the Office of Patent Application Processing (OPAP) for further processing using the declaration filed October 30, 2009.

[1] 37 CFR 1.137(b)(3) requires a statement that the entire delay in filing the required reply from the due date for the reply until the filing of a grantable petition pursuant to 37 CFR 1.137(b) was unintentional. While it is not apparent whether the person signing the statement of unintentional delay was in a position to have firsthand or direct knowledge of the facts and circumstances of the delay at issue, such statement is being treated as having been made as the result of a reasonable inquiry into the facts and circumstances of such delay. See 37 CFR 10.18(b) and Changes to Patent Practice and Procedure; Final Rule Notice, 62 Fed. Reg. 53131, 53178 (October 10, 1997), 1203 Off. Gaz. Pat. Office 63, 103 (October 21, 1997). In the event that such an inquiry has not been made, petitioner must make such an inquiry. If such inquiry results in the discovery that it is not correct that the entire delay in filing the required reply from the due date for the reply until the filing of a grantable petition pursuant to 37 CFR 1.137(b) was unintentional, petitioner must notify the Office.

Telephone inquires related to this decision should be directed to the undersigned at (571) 272-3204. Telephone inquiries related to processing at OPAP should be directed to their hotline at (571) 272-4000.

Sherry D. Brinkley
Petitions Examiner
Office of Petitions

UNITED STATES PATENT AND TRADEMARK OFFICE

UNITED STATES DEPARTMENT OF COMMERCE
United States Patent and Trademark Office
Address: COMMISSIONER FOR PATENTS
P.O. Box 1450
Alexandria, Virginia 22313-1450
www.uspto.gov

APPLICATION NO.	FILING DATE	FIRST NAMED INVENTOR	ATTORNEY DOCKET NO.	CONFIRMATION NO.
12/188,115	08/07/2008	Benjamin Lee Goodman	AUS920080421US1	4347

80692 7590 02/10/2009
Snell & Wilmer L.L.P. (IBM Corp)
600 Anton Blvd
Suite 1400
Costa Mesa, CA 92626

EXAMINER
RINEHART, MARK H

ART UNIT	PAPER NUMBER
2111	

MAIL DATE	DELIVERY MODE
02/10/2009	PAPER

Please find below and/or attached an Office communication concerning this application or proceeding.

The time period for reply, if any, is set in the attached communication.

UNITED STATES PATENT AND TRADEMARK OFFICE

Commissioner for Patents
United States Patent and Trademark Office
P.O. Box 1450
Alexandria, VA 22313-1450
www.uspto.gov

SNELL & WILMER L.L.P. (IBM CORP)
600 ANTON BLVD
SUITE 1400
COSTA MESA, CA 92626

2/04/09

In re Application of: GOODMAN, et al
Serial No.: 12/188,115
Filed: August 7, 2008
Docket: AUS920080421US1
Title: METHOD AND APPARATUS FOR PREVENTING BUS LIVELOCK DUE TO EXCESSIVE MMIO

DECISION ON PETITION TO MAKE SPECIAL FOR NEW APPLICATION UNDER 37 C.F.R. § 1.102 & M.P.E.P. § 708.02

This is a decision on the petition filed on August 7, 2008 to make the above-identified application special for accelerated examination procedure under 37 C.F.R. § 1.102(d).

The petition to make the application special is **DISMISSED**.

REGULATION AND PRACTICE

A grantable petition to make special under 37 C.F.R. § 1.102(d) and pursuant to the "Change to Practice for Petitions in Patent Applications to Make Special and for Accelerated Examination" published in the Federal Register on June 26, 2006 (71 Fed. Reg. 36323), must satisfy the following conditions:

I. Conditions Regarding the Application:

1. the application must be a non-reissue utility or design application filed under 37 CFR 1.111(a);

2. the application, the petition and the required fees must be filed electronically using the USPTO's electronic filing system (EFS), or EFS-web; if not filed electronically, a statement asserting that EFS and EFS-web were not available during the normal business hours.

3. at the time of filing, the application must be complete under 37 CFR 1.51 and in condition for examination;

4. the application must contain three or fewer independent claims and twenty or fewer total claims and the claims must be directed to a single invention.

II. Conditions Regarding the Petition:

The petition must:

1. be filed with the application;

2. include a statement that applicant agrees that the dependent claims will be grouped together with and not to separately argue the patentability of any independent claim from which they depend during any appeal in the application;

3. include a statement that applicant agrees to make an election without traverse in a telephone interview.

4. include a statement that applicant agrees to conduct such an interview when requested by the examiner.

5. include a statement, made based on a good faith belief, that a preexamination search in compliance with the following requirements, was conducted, including an identification of the field of search by United States class and subclass, where applicable, and for database searches, the search logic or chemical structure or sequence used as a query, the name of the file(s) searched and the database service, and the date of the search.

The preexamination search must:

5.1 involve U.S. patents and patent application publications, foreign patent documents, and non-patent literature, unless the applicant can justify with reasonable certainty that no references more pertinent than those already identified are likely to be found in the eliminated sources and includes such a justification with this statement;

5.2. be directed to the claimed invention and encompass all of the features of the claims, giving the claims the broadest reasonable expectation;

5.3. encompass the disclosed features that may be claimed.

6. must provide in support of the petition an accelerated examination support document. An accelerated examination support document must include:

6.1. an information disclosure statement (IDS) in compliance with 37 CFR 1.98 citing each reference deemed most closely related to the subject matter of each of the claims;

6.2. an identification of all the limitations in the claims that are disclosed by the reference specifying where the limitation is disclosed in the cited reference;

6.3. a detailed explanation of how each of the claims are patentable over the references cited with particularity required by 37 CFR 1.111(b) and (c);

6.4. a concise statement of the utility of the invention as defined in each of the independent claims (unless the application is a design application);

6.5. a showing of where each limitation of the claims finds support under 35 USC 112, first paragraph, in the written description of the specification. If applicable, the showing must also identify: (1) each means- (or step) plus-function claim element that invokes consideration under 35 USC 112, sixth paragraph; and (2) the structure, material, or acts in the specification that corresponds to each means- (or step) plus-function claim element that invokes consideration under 35 USC 112, sixth paragraph; if the application claims the benefit of one or more applications under title 35, United States Code, the showing must also include where each limitation of the claims finds support under 35 USC 112, first paragraph, in each such application in which such supports exists;

6.6. an identification of any cited references that may be disqualified under 35 USC 103(c).

REVIEW OF FACTS

The conditions I. 1-4 & II. 1-5, 5.1, 6.1, 6.2, 6.4 & 6.6 above are considered to have been met. However, the petition fails to comply with conditions II. 5.2, 5.3, 6.3, & 6.5 above. Therefore, the petition fails to meet the required conditions to be accorded special status under the accelerated examination procedure.

Regarding the requirement of MPEP § 708.02(a)(I.)(H)[1] and items 5.2 - 5.3 above, the pre-exam search must be directed to the (instant) claimed invention and encompass all of the disclosed features of the (instant) claims. The search logic does not seem to include the inventive concept or features included in the claim language and identified by Petitioner in the detailed explanation of patentability of the claims over the cited references. The search should consider individual features, combination of features as well as synonyms. The search should also cover the broadest scope encompassed by the claims. Based upon the claimed subject matter of the instant application, the following supplemental suggested search is presented:

Additional Class(es)/Subclass(es) should be searched:

710/112 (where the instant application is classified), as well as subclasses 35, 39, 107-125, 201-244; and cl.719/321 and 327. In addition, the following recommended additional text search (terms and rationale) are noted below:

livelock near3 (prevent$3 or avoid$4) and/same snoop$3

The applicant searched livelock anded with SMP. However, since livelock only occurs in systems that have multiple controllers, the SMP portion of the search was unnecessary and would have unduly limited the results. Further, since livelock is undesirable the only references that mention it for purposes of preventing its occurrence, so including prevention/avoidance also unduly limits the search.

Since a snoop is a nondestructive read of a cache or other memory, expanding the search with (Cache same read$4) should yield pertinent art.

The claim language includes limitations to a random time gap, so a search including (different same random$4) AND livelock will also yield pertinent art. In particular **US 5,758,104** discloses a random delay to prevent livelock which bears consideration.

Threshold and limit are pertinent terms which should be broadened to include full$4 (for fullness); overflow; and watermark. It is common for a Queue to have a "watermark" or a "fullness" indicator.

The Burst search could be anded with (prevent$4 or disabl$4 or inhibit$4) which would bring pertinent art into a set to evaluate.

A pertinent reference which applicant should consider is **US 5,930,485**, which discloses inbound and outbound Queues to prevent livelock.

The additional search recommendations were confirmed with and supporting rationale provided by a (Primary) examiner in the pertinent art area.

---

[1] MPEP 8th ed. rev 5 August 2006

With regard to the requirement of MPEP § 708.02(a)(I.)(I)(5) and item 6.3 above, Petitioner fails to provide a detailed explanation of how the claim is patentable over any of the references cited with particularly required by 37 CFR 1.111(b) and (c). Specifically, Petitioner should ensure that the above discussion is directed to how the language of how the claim is **specifically** distinguishable and patentable from each of the references provided in requirement (6.1) above, under the provisions of 35 USC 102 (novelty) and 35 USC 103 (non-obviousness). That is, there appears to be no apparent relevant discussion regarding patentability of the instant claim with respect to either of the above noted sections. Clarification is required.

With regard to the requirement of MPEP § 708.02(a)(I.)(I)(5) and item 6.5 above, Petitioner fails to identify where each limitation of the instant claims finds support under 35 USC 112, first paragraph, in the written description of the specification. Support for each limitation of each pending claim must be properly identified (by page, line or paragraph and/or figure). Specifically, reference is made to Petitioner's ***general*** allegation that support in the disclosure under 35 USC 112, first paragraph, is found in paragraphs [0014] – [0024].

> **2162 Policy Underlying 35 U.S.C. 112, First Paragraph**
> To obtain a valid patent, a patent application must be filed that contains a full and clear disclosure of the invention in the manner prescribed by 35 U.S.C. 112, first paragraph. The requirement for an adequate disclosure ensures that the public receives something in return for the exclusionary rights that are granted to the inventor by a patent. The grant of a patent helps to foster and enhance the development and disclosure of new ideas and the advancement of scientific knowledge. Upon the grant of a patent in the U.S., information contained in the patent becomes a part of the information available to the public for further research and development, subject only to the patentee's right to exclude others during the life of the patent.
> In exchange for the patent rights granted, 35 U.S.C. 112, first paragraph, sets forth the minimum requirements for the quality and quantity of information that must be contained
>
> in the patent to justify the grant. As discussed in more detail below, the patentee must disclose in the patent sufficient information to put the public in possession of the invention and to enable those skilled in the art to make and use the invention. The applicant must not conceal from the public the best way of practicing the invention that was known to the patentee at the time of filing the patent application. Failure to fully comply with the disclosure requirements could result in the denial of a patent, or in a holding of invalidity of an issued patent.

The requirement of MPEP § 708.02(a)(I.)(I)(5) and item II. 6.5 above clearly states that the petitioner is required to **specifically identify corresponding elements in the figures** and **specifically identify where the corresponding written description in the cited portions of the instant specification** can find support under 35 U.S.C. § 112, first paragraph **for each limitation of claim 1**. A review of the paragraphs [0014] – [0024] of the instant specification does not appear to provide clear support of all of the claim 1 limitations, including the preamble (lines 1-3) as well as the last claim limitation i.e. "wherein the threshold defines ... of the processor (para. 0016)". It is pointed out that the written description requirement has several policy objectives. The essential goal of the description of the invention requirement is to clearly convey the information that an applicant has invented the subject matter which is claimed. Another objective is to put the examiner in possession of what the applicant claims as the invention – the written description requirement implements the principle that a patent application must describe

the technology that is sought to be patented; the requirement serves both to satisfy the inventor's obligation to disclose the technologic knowledge upon which the application is based and to demonstrate that the applicants were in possession of the invention that is claimed. Further, the written description requirement promotes the progress of expedite examination by ensuring that applicants adequately describe their inventions in sufficient detail in their applications in exchange for the right to take-up out of order of examination. Thus, the petition fails to satisfy the requirements of MPEP § 708.02(a)(I.)(I)(5) and item II. 6.5 above.

Clarification and identification of support for each limitation in the claim is required.

Thus, the petition does not meet the conditions II. 5.2 - 5.3, 6.3, & 6.5 above.

DECISION

For the above-stated reasons, the petition is **DISMISSED**. The application will therefore be taken up by the examiner for action in its regular turn.

Petitioner is given ***a single opportunity*** to perfect the petition. Any request for reconsideration of this decision must be submitted within 1 (one) month or 30 (thirty) days, whichever is longer, (no extension of time under 37 CFR 1.136(a) is permitted) from the date of this decision in order to be considered timely. Any request for reconsideration ***must fully address all of the deficiencies indicated above***. [emphasis added]

Petitioner is reminded that, upon granting of the special status of the application on request for reconsideration, the application will be processed expeditiously. However, due to the dismissal of the instant petition, examination may not be completed within twelve months of the filing date of the application.

Any inquiry regarding this decision should be directed to Brian Johnson, Quality Assurance Specialist, at (571) 272-3595. If attempts to reach the undersigned by telephone are unsuccessful, Kakali Chaki, Quality Assurance Specialist, can be reached at (571) 272-3719.

Brian L. Johnson
Quality Assurance Specialist, WG 2110
Technology Center 2100

UNITED STATES PATENT AND TRADEMARK OFFICE

UNITED STATES DEPARTMENT OF COMMERCE
United States Patent and Trademark Office
Address: COMMISSIONER FOR PATENTS
P.O. Box 1450
Alexandria, Virginia 22313-1450
www.uspto.gov

APPLICATION NO.	FILING DATE	FIRST NAMED INVENTOR	ATTORNEY DOCKET NO.	CONFIRMATION NO.
12/188,115	08/07/2008	Benjamin Lee Goodman	AUS920080421US1	4347

80692 7590 03/24/2009
Snell & Wilmer L.L.P. (IBM Corp)
600 Anton Blvd
Suite 1400
Costa Mesa, CA 92626

EXAMINER
RINEHART, MARK H

ART UNIT	PAPER NUMBER
2111	

MAIL DATE	DELIVERY MODE
03/24/2009	PAPER

Please find below and/or attached an Office communication concerning this application or proceeding.

The time period for reply, if any, is set in the attached communication.

UNITED STATES PATENT AND TRADEMARK OFFICE

Commissioner for Patents
United States Patent and Trademark Office
P.O. Box 1450
Alexandria, VA 22313-1450
www.uspto.gov

SNELL & WILMER L.L.P. (IBM CORP)
600 ANTON BLVD.
SUITE 1400
COSTA MESA, CA 92626

03/19/09

In re application of:
GOODMAN, et al.
Application No.: 12/188,115
Filed: August 07, 2008
For: METHOD AND APPARATUS FOR PREVENTING BUS LIVELOCK DUE TO EXCESSIVE MMIO

DECISION ON RENEWED PETITION TO MAKE SPECIAL FOR NEW APPLICATION UNDER 37 CFR 1.102

This is a decision on the renewed petition filed on March 9, 2009 to make the above-identified application special for accelerated examination procedure under 37 C.F.R. § 1.102(d).

The petition to make the application special is **DENIED**.

A petition to make special was filed in the above-identified application under 37 CFR 1.102(d) on August 7, 2008. That petition was dismissed in a decision mailed February 10, 2009 wherein a non-extendible period of 1 (one) month or 30 (thirty) days, whichever was longer, was set to request reconsideration.

In the decision mailed February 10, 2009, the reasons for the dismissal were identified to be inadequate preexamination search and an inadequate support document (conditions II 5.2, 5.3, 6.3 and 6.5 identified below).

REGULATION AND PRACTICE

A grantable petition to make special under 37 C.F.R. § 1.102(d) and pursuant to the "Change to Practice for Petitions in Patent Applications to Make Special and for Accelerated Examination" published in the Federal Register on June 26, 2006 (71 Fed. Reg. 36323), must satisfy the following conditions:

I. Conditions Regarding the Application:

1. the application must be a non-reissue utility or design application filed under 37 CFR 1.111(a);

2. the application, the petition and the required fees must be filed electronically using the USPTO's electronic filing system (EFS), or EFS-web; if not filed electronically, a statement asserting that EFS and EFS-web were not available during the normal business hours.

3. at the time of filing, the application must be complete under 37 CFR 1.51 and in condition for examination;

4. the application must contain three or fewer independent claims and twenty or fewer total claims and the claims must be directed to a single invention.

II. Conditions Regarding the Petition:

The petition must:

1. be filed with the application;

2. include a statement that applicant agrees not to separately argue the patentability of any independent claim during any appeal in the application;

3. include a statement that applicant agrees to make an election without traverse in a telephone interview.

4. include a statement that applicant agrees to conduct such an interview when requested by the examiner.

5. include a statement, made based on a good faith belief, that a preexamination search in compliance with the following requirements, was conducted, including an identification of the filed of search by United States class and subclass, where applicable, and for database searches, the search logic or chemical structure or sequence used as a query, the name of the file(s) searched and the database service, and the date of the search.

The preexamination search must:

5.1 involve U.S. patents and patent application publications, foreign patent documents, and non-patent literature, unless the applicant can justify with reasonable certainty that no references more pertinent than those already identified are likely to be found in the eliminated sources and includes such a justification with this statement;

5.2. be directed to the claimed invention and encompass all of the features of the claims, giving the claims the broadest reasonable interpretation;

5.3. encompass the disclosed features that may be claimed.

6. must provide in support of the petition an accelerated examination support document. An accelerated examination support document must include:

6.1. an information disclosure statement (IDS) in compliance with 37 CFR 1.98 citing each reference deemed most closely related to the subject matter of each of the claims;

6.2. an identification of all the limitations in the claims that are disclosed by the reference specifying where the limitation is disclosed in the cited reference;

6.3. a detailed explanation of how each of the claims are patentable over the references cited with particularity required by 37 CFR 1.111(b) and (c);

6.4. a concise statement of the utility of the invention as defined in each of the independent claims (unless the application is a design application);

6.5. a showing of where each limitation of the claims finds support under 35 USC 112, first paragraph, in the written description of the specification. If applicable, the showing must also identify: (1) each means- (or step) plus-function claim element that invokes consideration under 35 UDC 112, sixth paragraph; and (2) the structure, material, or acts in the specification that

corresponds to each means- (or step) plus-function claim element that invokes consideration under 35 UDC 112, sixth paragraph; if the application claims the benefit of one or more applications under title 35, United States Code, the showing must also include where each limitation of the claims finds support under 35 USC 112, first paragraph, in each such application in which such supports exists;

6.6. an identification of any cited references that may be disqualified under 35 USC 103(c).

REVIEW OF FACTS

The conditions I. 1-4, II. 1-4, 5, 5.1, 6.1, 6.2, 6.4 and 6.6 above are considered to have been met. However, the renewed petition fails to comply with condition **II. 5.2, 5.3, 6.3 and 6.5 above**. Therefore, the renewed petition fails to meet the required conditions to be accorded special status under the accelerated examination procedure.

With respect to the renewed support document and with regard to the requirement of MPEP § 708.02(a)(I)(H)(2-3) and items 5.2 and 5.3 above, the renewed petition fails to address and/or consider a pertinent reference as identified on page 3 of the decision i.e. "A pertinent reference which applicant should consider is **US 5,930,485**, which discloses inbound and outbound Queues to prevent livelock". Petitioner neither cited nor commented on this identified reference.

With respect to the renewed support document and with regard to the requirement of MPEP § 708.02(a)(I.)(I)(3) and item 6.3 above and as stated in the earlier decision, the renewed petition fails to provide a detailed explanation of how each of the claims are patentable over the references cited with the particularity required by 37 CFR 1.111(b) and (c)." Specifically, Petitioner should ensure that the above discussion is directed to how the language of how the claim is **specifically** distinguishable and patentable from each of the references provided in requirement (6.1) above, under the provisions of 35 USC 102 (novelty) and 35 USC 103 (non-obviousness). That is, there appears to be no apparent relevant discussion regarding patentability of the instant claim with respect to either 35 USC 102 or 103. Rather, on pages 7-8 of the instant support document, Petitioner mere repeats essentially the entirety of the claim as not having been taught.

In addition and with respect to condition 6.3 above, the detailed explanation of ***how each of the claims are patentable*** over the references cited ***with particularity required by 37 CFR 1.111(b) and (c)*** [***emphasis added***] is incomplete. Note, it was assumed that after the supplemental search was completed, new references would be found that better read on the claimed invention and would be properly analyzed in the support document included with any renewed petition. However, the renewed petition fails to provide a detailed explanation of how claim 1 of the instant invention is patentable over the previously cited references to Hall, et al. (U.S. patent pub. 20080065873), Doing, et al. (U.S. patent pub. 20070118837), Mayfield (U.S. patent 6,968,431), Pong (U.S. patent 6,341,337) and Hill, et al. (6,078,981). As identified in the previous decision, Petitioner did not point out the particular language that patentably distinguishes the instant claim under 35 USC 102 and 103.. The renewed petition fails to either provide a detailed explanation in compliance with 37 CFR 1.111(b) and (c) of how the claim of the instant application (i.e. claim 1) is patentable over the references

(identified above), or to provide a explicit statement on the record that the most closely related references are only those newly cited references (provided with the instant petition) **to the exclusion of** the first five most closely related references (cited previously and noted above).

With respect to the renewed support document and with regard to the requirement of MPEP § 708.02(a)(I.)(I)(5) and item 6.5 above and as stated in the earlier decision, a review of the paragraphs [0014] – [0024] of the instant specification does not appear to provide clear support of all of the claim 1 limitations, including **the preamble** (lines 1-3 of claim 1 and **not addressed by Petitioner)** as well as the last two lines of the claim i.e. "wherein the threshold defines ... of the processor (referenced as found in para. 0016)", **also not addressed** nor further identified by Petitioner.

For these reasons, the petition does not meet the requirement of MPEP § 708.02(a).

For the above stated reasons, the petition is **DENIED**. The application will therefore be taken up by the examiner for action in its regular turn.

Petitioner is reminded that a single opportunity to perfect the original petition filed August 07, 2008 was given. Therefore, further petitions for accelerated examination in this application will not be entertained.

Any inquiry regarding this decision should be directed to Brian Johnson, Quality Assurance Specialist, at (571) 272-3595. If attempts to reach the undersigned by telephone are unsuccessful, Kakali Chaki, Quality Assurance Specialist, can be reached at (571) 272-3719.

Brian L. Johnson
Quality Assurance Specialist, WG 2110
Technology Center 2100
Computer Architecture, Software and Information Security

UNITED STATES PATENT AND TRADEMARK OFFICE

Commissioner for Patents
United States Patent and Trademark Office
P.O. Box 1450
Alexandria, VA 22313-1450
www.uspto.gov

QUALCOMM INCORPORATED
5775 MOREHOUSE DR.
SAN DIEGO CA 92121

MAILED

AUG 17 2009

OFFICE OF PETITIONS

In re Application of	:	
Rajiv LAROIA et al.	:	
Application No. 12/188,140	:	DECISION ON PETITION
Effective Date: August 07, 2008	:	
Attorney Docket No. 060570B1C1	:	

This is a decision on the petition under the unintentional provisions of 37 CFR 1.137(b), filed June 29, 2009 to revive the above-identified application.

The petition is **GRANTED**.

The application became abandoned for failure to reply in a timely manner to the Notice to File Missing Parts of Nonprovisional Application (Notice), mailed August 21, 2008. The Notice set a period for reply of two (2) months from the mail date of the Notice. No extensions of time under the provisions of 37 CFR 1.136(a) were obtained. Accordingly, the application became abandoned on October 22, 2008.

The petition satisfies the requirements of 37 CFR 1.137(b) in that petitioner has supplied (1) the reply in the form of a corrected Oath or Declaration and a payment of the Surcharge Fee, (2) the petition fee of $1,620.00, and (3) a proper statement of unintentional delay. Accordingly, the reply to the Notice to File Missing Parts of Nonprovisional Application of August 21, 2008 is accepted as having been unintentionally delayed.

It is not apparent whether the person signing the statement of unintentional delay was in a position to have firsthand or direct knowledge of the facts and circumstances of the delay at issue. Nevertheless, such statement is being treated as having been made as the result of a reasonable inquiry into the facts and circumstances of such delay. See 37 CFR 10.18(b) and Changes to Patent Practice and Procedure; Final Rule Notice, 62 Fed. Reg. 53131, 53178 (October 10, 1997), 1203 Off. Gaz. Pat. Office 63, 103 (October 21, 1997). In the event that such an inquiry has not been made, petitioner must make such an inquiry. If such inquiry results in the discovery that it is not correct that the entire delay in filing the required reply from the due date for the reply until the filing of a grantable petition pursuant to 37 CFR 1.137(b) was unintentional, petitioner must notify the Office.

Telephone inquiries concerning this decision should be directed to Niketa I. Patel at 571-272-4156 or in her absence, the undersigned at 571-272-7099.

This application is being referred to the Office Patent Application Processing.

David Bucci
Petitions Examiner
Office of Petitions

UNITED STATES PATENT AND TRADEMARK OFFICE

Commissioner for Patents
United States Patent and Trademark Office
P.O. Box 1450
Alexandria, VA 22313-1450
www.uspto.gov

KLARQUIST SPARKMAN, LLP
121 SW SALMON STREET, SUITE 1600
PORTLAND, OR 97204

COPY MAILED

AUG 20 2008

In re Application of	:	
CARRASCO, Robert M.	:	
Application No. 12/188,152	:	DECISION ON PETITION
Filed: August 7, 2008	:	TO MAKE SPECIAL UNDER
Attorney Docket No. 7634-78182-02	:	37 CFR 1.102(c)(1)
	:	

This is a decision on the petition under 37 CFR 1.102(c)(1), filed August 7, 2008, to make the above-identified application special based on applicant's age as set forth in M.P.E.P. § 708.02, Section IV.

The petition is GRANTED.

A grantable petition to make an application special under 37 CFR 1.102(c)(1) and MPEP § 708.02, Section IV: Applicant's Age must be accompanied by evidence showing that at least one of the applicants is 65 years of age, or more, such as a birth certificate or a statement by applicant. No fee is required

The instant petition includes the driver's license of inventor Robert M. Carrasco, attesting to his age. Accordingly, the above-identified application has been accorded "special" status.

Inquiries concerning either the examination or status of the application should be directed to the Technology Center 571-272-1700.

Telephone inquiries concerning this decision should be directed to the undersigned at 571-272-7253.

The application is being forwarded to the Technology Center Art Unit 1793 for action on the merits commensurate with this decision.

Monica A. Graves
Petitions Examiner
Office of Petitions

UNITED STATES PATENT AND TRADEMARK OFFICE

UNITED STATES DEPARTMENT OF COMMERCE
United States Patent and Trademark Office
Address: COMMISSIONER FOR PATENTS
P.O. Box 1450
Alexandria, Virginia 22313-1450
www.uspto.gov

APPLICATION NO.	FILING DATE	FIRST NAMED INVENTOR	ATTORNEY DOCKET NO.	CONFIRMATION NO.
12/188,225	08/08/2008	James K. Ward	WAR08-01	4577

26160 7590 09/22/2008
MELITO, CARL F. , ATTORNEY AT LAW
12225 GREENVILLE AVENUE
SUITE 700
DALLAS, TX 75243

EXAMINER

ART UNIT	PAPER NUMBER
3634	

MAIL DATE	DELIVERY MODE
09/22/2008	PAPER

Please find below and/or attached an Office communication concerning this application or proceeding.

The time period for reply, if any, is set in the attached communication.

UNITED STATES PATENT AND TRADEMARK OFFICE
UNDER SECRETARY OF COMMERCE FOR INTELLECTUAL PROPERTY AND
DIRECTOR OF THE UNITED STATES PATENT AND TRADEMARK OFFICE
WASHINGTON, DC 20231
www.uspto.gov

MAILED
FROM DIRECTORS OFFICE
SEP 19 2008
TECHNOLOGY CENTER 3600

Melito, Carl F., Attorney at Law
12225 Greenville Avenue
Suite 700
Dallas, TX 75243

In re application of James K. Ward Application No. 12/188,225 Filed: August 8, 2008 For: CUSTOMIZABLE SNAP-ON GARAGE DOOR SCREEN AND METHOD	DECISION ON PETITION TO MAKE SPECIAL FOR NEW APPLICATION UNDER 37 CFR 1.102

This is a decision on the petition filed on August 8, 2008 to make the above-identified application special for accelerated examination procedure under 37 C.F.R. § 1.102(d).

The petition to make the application special is **DISMISSED.**

REGULATION AND PRACTICE

A grantable petition to make special under 37 C.F.R. § 1.102(d) and pursuant to the "Change to Practice for Petitions in Patent Applications to Make Special and for Accelerated Examination" published in the Federal Register on June 26, 2006 (71 Fed. Reg. 36323), must satisfy the following conditions:

I. Conditions Regarding the Application:

1. the application must be a non-reissue utility or design application filed under 37 CFR 1.111(a);

2. the application, the petition and the required fees must be filed electronically using the USPTO's electronic filing system (EFS), or EFS-web; if not filed electronically, a statement asserting that EFS and EFS-web were not available during the normal business hours;

3. at the time of filing, the application must be complete under 37 CFR 1.51 and in condition for examination;

4. the application must contain three or fewer independent claims and twenty or fewer total claims and the claims must be directed to a single invention.

II. Conditions Regarding the Petition:

The petition must:

1. be filed with the application;

2. include a statement that applicant agrees not to separately argue the patentability of any independent claim during any appeal in the application;

3. include a statement that applicant agrees to make an election without traverse in a telephone interview;

4. include a statement that applicant agrees to conduct such an interview when requested by the examiner;

5. include a statement, made based on a good faith belief, that a preexamination search in compliance with the following requirements, was conducted, including an identification of the field of search by United States class and subclass, where applicable, and for database searches, the search logic or chemical structure or sequence used as a query, the name of the file(s) searched and the database service, and the date of the search.

The preexamination search must:

5.1 involve U.S. patents and patent application publications, foreign patent documents, and non-patent literature, unless the applicant can justify with reasonable certainty that no references more pertinent than those already identified are likely to be found in the eliminated sources and includes such a justification with this statement;

5.2. be directed to the claimed invention and encompass all of the features of the claims, giving the claims the broadest reasonable expectation;

5.3. encompass the disclosed features that may be claimed.

6. must provide in support of the petition an accelerated examination support document.

An accelerated examination support document must include:

6.1. an information disclosure statement (IDS) in compliance with 37 CFR 1.98 citing each reference deemed most closely related to the subject matter of each of the claims;

6.2. an identification of all the limitations in the claims that are disclosed by the reference specifying where the limitation is disclosed in the cited reference;

6.3. a detailed explanation of how each of the claims are patentable over the references cited with particularity required by 37 CFR 1.111(b) and (c);

6.4. a concise statement of the utility of the invention as defined in each of the independent claims (unless the application is a design application);

6.5. a showing of where each limitation of the claims finds support under 35 USC 112, first paragraph, in the written description of the specification. If applicable, the showing must also identify: (1) each means- (or step) plus-function claim element that invokes consideration under 35 UDC 112, sixth paragraph; and (2) the structure, material, or acts in the specification that corresponds to each means- (or step) plus-

function claim element that invokes consideration under 35 UDC 112, sixth paragraph; if the application claims the benefit of one or more applications under title 35, United States Code, the showing must also include where each limitation of the claims finds support under 35 USC 112, first paragraph, in each such application in which such supports exists;

6.6. an identification of any cited references that may be disqualified under 35 USC 103(c).

REVIEW OF FACTS

The petition fails to comply with conditions II.5.1, II.6.2 and II.6.5 above.

As to condition II.5.1, the preexamination search involving foreign patent documents is insufficient. Although the preexamination search includes a search of the EPO database, normally it is necessary to have the JPO and WIPO databases searched in addition to the EPO.

As to condition II.6.2, there currently is not an adequate explanation specifying where each of the limitations (or portions thereof) are disclosed in each of the references. An explanation of the references is not sufficient to meet the above condition. Each reference must be analyzed to indicate whether or not ***each limitation of each claim*** is taught by the references. Furthermore, since applicant did not file two separate IDS, ***all*** references cited in the information disclosure statement must be so analyzed as they are provided in support of the petition.

As to condition to II.6.5, the showing of where each limitation of the claim finds support under 35 USC 112 in the written description of the application is insufficient. For each claimed limitation the petition needs to identify specific passages, or at least a single paragraph where each limitation is supported. Applicant has merely provided the first instance where support is found in the specification for each ***element*** claimed. What is required is a showing of support where each ***limitation*** of the claim finds support under 35 USC 112 in the written description.

Therefore, the petition fails to meet the required conditions to be accorded special status under the accelerated examination procedure.

DECISION

For the above-stated reasons, the petition is DISMISSED. The application will therefore be taken up by the examiner for action in its regular turn.

Petitioner is given a single opportunity to perfect the petition. Any request for reconsideration of this decision must be submitted within 1 (one) month or 30 (thirty) days, whichever is longer, (no extension of time under 37 CFR 1.136(a)) from the date of this decision in order to be considered timely. Any request for reconsideration must address the deficiencies indicated above.

Petitioner is reminded that, upon granting of the special status of the application on request for reconsideration, the application will be processed expeditiously. However, due to the dismissal of the instant petition, examination may not be completed within twelve months of the filing date of the application.

Any inquiry regarding this decision should be directed to Teri P. Luu, Quality Assurance Specialist, at (571) 272-7045.

Teri P. Luu
Quality Assurance Specialist
Technology Center 3600

TL/tl: 09/18/08

UNITED STATES PATENT AND TRADEMARK OFFICE

UNITED STATES DEPARTMENT OF COMMERCE
United States Patent and Trademark Office
Address: COMMISSIONER FOR PATENTS
P.O. Box 1450
Alexandria, Virginia 22313-1450
www.uspto.gov

APPLICATION NO.	FILING DATE	FIRST NAMED INVENTOR	ATTORNEY DOCKET NO.	CONFIRMATION NO.
12/188,225	08/08/2008	James K. Ward	WAR08-01	4577

26160 7590 10/28/2008
MELITO, CARL F. , ATTORNEY AT LAW
12225 GREENVILLE AVENUE
SUITE 700
DALLAS, TX 75243

EXAMINER

ART UNIT	PAPER NUMBER
3634	

MAIL DATE	DELIVERY MODE
10/28/2008	PAPER

Please find below and/or attached an Office communication concerning this application or proceeding.

The time period for reply, if any, is set in the attached communication.

UNITED STATES PATENT AND TRADEMARK OFFICE

UNDER SECRETARY OF COMMERCE FOR INTELLECTUAL PROPERTY AND
DIRECTOR OF THE UNITED STATES PATENT AND TRADEMARK OFFICE
WASHINGTON, DC 20231
www.uspto.gov

MAILED FROM
DIRECTORS OFFICE
OCT 28 2008
TECHNOLOGY CENTER

Melito, Carl F., Attorney at Law
12225 Greenville Avenue
Suite 700
Dallas, TX 75243

In re application of	:	
James K. Ward	:	DECISION ON PETITION
Application No. 12/188,225	:	TO MAKE SPECIAL FOR
Filed: August 8, 2008	:	NEW APPLICATION
For: CUSTOMIZABLE SNAP-ON GARAGE	:	UNDER 37 CFR 1.102
DOOR SCREEN AND METHOD	:	

This is a decision on the renewed petition filed on October 6, 2008 to make the above-identified application special for accelerated examination procedure under 37 C.F.R. § 1.102(d).

The petition to make the application special is **DENIED**.

A petition to make special was filed in the above-identified application under 37 CFR 1.102(d) on August 8, 2008. That petition was dismissed in a decision mailed September 22, 2008.

The reason for the dismissal were an inadequate search and an inadequate Support Document. Specifically, the petition lacked an indication of a preexamination search involving JPO and WIPO documents. As to the Support Document, there lacked an adequate explanation adequate explanation specifying where each of the limitations (or portions thereof) are disclosed in each of the references.

A review of the search outlined in the renewed petition reveals an adequate search involving JPO and WIPO documents has been performed. With respect to the showing of where each limitations (or portions thereof) are disclosed in each of the references, the Support Document is still insufficient. For example, with respect to the reference to Bogumil, petitioner states:

> Bogumil teaches a screen construction for a garage car doorway characterized by a plurality of fasteners (i.e. a limitation claimed in claims 1-10 of applicant's invention) called spring clips secured to the doorway casing face at intervals along its perimeter (abstract, Figs. 1-5, col. 1 line 62, col. 2 lines 4, 8, 49, 51-68, col. 3 lines 8, 12, 16-19, 23, 25-45, 49-58,

> col. 4 lines 9-13, 19-22, 32, 46-50) to receive and clamp elastic straps (i.e. a limitation also claimed in claims 1-10 of applicant's invention) called flexible members (abstract, Figs. 1-4, col. 1 lines 59, col. 3 lines 51-57, col. 4 lines 6-9, 34-37) secured to the edges of the screen cloth to the casing face.

However, this is not an adequate showing of where each limitation (or portions thereof) of each claim are disclosed. Petitioner has merely provided a broad blanket statement of "a limitation claimed in claims 1-10". Petitioner has failed to provide a showing of where portions of limitations are taught by the prior art. For example, claim 2 recites:

> The customizable garage door screen of claim 1 wherein the upper left elastic strap is hooked to the left garage door guide rail and the upper right elastic strap is hooked to the right garage door guide rail.

Bogumil clearly discloses portions of the claim: "wherein the upper left elastic strap is" attached "to the left garage door" frame and the "upper right elastic strap is" attached "to the right garage door" frame.

Accordingly, an explanation of the references is not sufficient, as each reference has not been analyzed to indicate whether or not ***each limitation of each claim*** is taught by the references.

For the above stated reasons, the petition is denied. The application will therefore be taken up by the examiner for action in its regular turn.

Petitioner is reminded that a single opportunity to perfect the petition is given. Therefore, further petitions for accelerated examination in this application will not be entertained.

Any inquiry regarding this decision should be directed to Quality Assurance Specialist Teri P. Luu at (571) 272-7045.

Teri P. Luu
Quality Assurance Specialist
Technology Center 3600

TL/tl: 10/27/08

UNITED STATES PATENT AND TRADEMARK OFFICE

Commissioner for Patents
United States Patent and Trademark Office
P.O. Box 1450
Alexandria, VA 22313-1450
www.uspto.gov

Philip H. Burrus, IV
460 Grant Street
Atlanta, GA 30312

COPY MAILED

FEB 13 2009

OFFICE OF PETITIONS

In re Application of	:	
Alif Thompson	:	
Application No. 12/188,253	:	DECISION ON PETITION
Filed: June 8, 2008	:	TO WITHDRAW
Attorney Docket No. BPALF0001AT	:	FROM RECORD
	:	

This is a decision on the Request to Withdraw as attorney or agent of record under 37 C.F.R. § 1.36(b), filed January 8, 2009.

The request is **APPROVED**.

A grantable request to withdraw as attorney/agent of record must be signed by every attorney/agent seeking to withdraw or contain a clear indication that one attorney is signing on behalf of another/others. A request to withdraw will not be approved unless at least 30 (thirty) days would remain between the date of approval and the later of the expiration date of a time to file a response or the expiration date of the maximum time period which can be extended under 37 C.F.R. § 1.136(a).

The request was signed by Philip H. Burrus on behalf of all attorneys/agents associated with customer number 27939. All attorneys/agents associated with customer number 27939 have been withdrawn.

Applicant is reminded that there is no attorney of record at this time.

The correspondence address has been changed. The address is copied below.

Telephone inquiries concerning this decision should be directed to Kimberly Inabinet at 571-272-4618.

Kimberly Inabinet
Petitions Examiner
Office of Petitions

cc: Mr. Alif Thompson
4594 Derby Loop
Fairburn, GA 30213

UNITED STATES PATENT AND TRADEMARK OFFICE

UNITED STATES DEPARTMENT OF COMMERCE
United States Patent and Trademark Office
Address: COMMISSIONER FOR PATENTS
P.O. Box 1450
Alexandria, Virginia 22313-1450
www.uspto.gov

APPLICATION NUMBER	FILING OR 371(C) DATE	FIRST NAMED APPLICANT	ATTY. DOCKET NO./TITLE
12/188,253	08/08/2008	Alif Thompson	BPALF0001AT

CONFIRMATION NO. 4658

POWER OF ATTORNEY NOTICE

27939
PHILIP H. BURRUS, IV
460 Grant Street
Atlanta, GA 30312

OC000000034558480

Date Mailed: 02/13/2009

NOTICE REGARDING CHANGE OF POWER OF ATTORNEY

This is in response to the Power of Attorney filed 01/08/2009.

- The withdrawal as attorney in this application has been accepted. Future correspondence will be mailed to the new address of record. 37 CFR 1.33.

/kainabinet/

Office of Data Management, Application Assistance Unit (571) 272-4000, or (571) 272-4200, or 1-888-786-0101

UNITED STATES PATENT AND TRADEMARK OFFICE

Commissioner for Patents
United States Patent and Trademark Office
P.O. Box 1450
Alexandria, VA 22313-1450
www.uspto.gov

WOOD, HERRON & EVANS, LLP
2700 CAREW TOWER
441 VINE STREET
CINCINNATI OH 45202

AUG 20 2008

In re Application of: HINDERLING Serial No.: 12/188,351 Filed: August 8, 2008 Title: MAN MADE ISLAND WITH SOLAR ENERGY COLLECTION FACILITIES	DECISION ON PETITION TO MAKE SPECIAL FOR NEW APPLICATION UNDER 37 C.F.R. § 1.102 & M.P.E.P. § 708.02

This is a decision on the petition filed on August 8, 2008 to make the above-identified application special for accelerated examination procedure under 37 C.F.R. § 1.102(d).

The petition to make the application special is **DENIED**.

REGULATION AND PRACTICE

To be eligible for accelerated examination under 37 C.F.R. § 1.102(d) and pursuant to the "Change to Practice for Petitions in Patent Applications to Make Special and for Accelerated Examination" published in the Federal Register on June 26, 2006 (71 Fed. Reg. 36323), the following conditions must be satisfied:

1. The application must be a non-reissue utility or design application filed under 37 CFR 1.111(a);
2. The application, the petition and the required fees must be filed electronically using the USPTO's electronic filing system (EFS), or EFS-web; if not filed electronically, a statement asserting that EFS and EFS-web were not available during the normal business hours;
3. The application, at the time of filing, must be complete under 37 CFR 1.51 and in condition for examination;
4. The application must contain three or fewer independent claims and twenty or fewer total claims and the claims must be directed to a single invention.
5. The petition must be filed with the application.

The application as filed is not eligible for the accelerated examination under 37 C.F.R. § 1.102(d) because the application the application, at the time of filing, was not complete under 37 CFR 1.51 and in condition for examination, as evidenced by the presence of a preliminary

amendment at filing. See 71 Fed. Reg. 36323 notice, section VIII, Conditions for Examination, section (k). Further, the application contains more than 20 total claims due to the presence of multiply dependent claim 6. Note the presence of multiply dependent claims is prohibited by the Accelerated Examination policy: see Notice, Part I (5). The opportunity to perfect a petition does not apply to applications that are not in condition for examination on filing.

As noted in the policy statement referenced above, any petition to make special filed on or after the effective date must meet the new requirements set forth in the 71 Fed. Reg. 36323 notice. The effective date of the change in practice was August 25, 2006. Thus the instant petition must be reviewed under the revised practice and the instant application is ineligible.

The petition appears on its face to have been filed without recognition of the August 25, 2006 policy change to the petition to make special program. The changes to the program are substantial. Notably, special status based upon categories such as conservation of energy resources are no longer available. A copy of Federal Register on June 26, 2006 (71 Fed. Reg. 36323) is being attached to the mailed decision for petitioner's review.

For the above-stated reasons, the petition is **DENIED**. The application will therefore be taken up by the examiner for action in its regular turn.

Any inquiry regarding this decision should be directed to J. Harrison, TC 3700 Special Program Examiner, at (571) 272-4449.

J. Harrison
Special Program Examiner
Technology Center 3700

UNITED STATES PATENT AND TRADEMARK OFFICE

UNITED STATES DEPARTMENT OF COMMERCE
United States Patent and Trademark Office
Address: COMMISSIONER FOR PATENTS
P.O. Box 1450
Alexandria, Virginia 22313-1450
www.uspto.gov

KREMBLAS, FOSTER, PHILLIPS & POLLICK
7632 SLATE RIDGE BOULEVARD
REYNOLDSBURG, OH 43068

Mail Date: 04/20/2010

Applicant	: Geno N. Gasbarro	: DECISION ON REQUEST FOR
Patent Number	: 7662031	: RECALCULATION of PATENT
Issue Date	: 02/16/2010	: TERM ADJUSTMENT IN VIEW
Appliction No	: 12/188,354	: OF WYETH AND NOTICE OF INTENT TO
Filed	: 08/08/2008	: ISSUE CERTIFICATE OF CORRECTION
		:

The Request for Recalculation is **GRANTED** to the extent indicated.

The patent term adjustment has been determined to be **0** days. The USPTO will *sua sponte* issue a certificate of correction reflecting the amount of PTA days determined by the recalculation.

Prior to the issuance of the certificate of correction, the USPTO will afford patentee an opportunity to be heard and request reconsideration. Accordingly, patentee has **one month or thirty (30) days**, whichever is longer, to file a request for reconsideration of this patent term adjustment calculation. See 35 U.S.C. 154(b)(3)(B)(ii) and 37 CFR 1.322(a)(4). No extensions of time will be granted under 37 CFR 1.136.

Patentee should use document code PET.OP if electronically filing a request for reconsideration of this patent term adjustment calculation. The patentee must also include the information required by 37 CFR 1.705(b)(2) and the fee required by 37 CFR 1.18(e). If patentee does not file a timely request for reconsideration of this patent term adjustment calculation including the information required by 37 CFR 1.705(b)(2) and the fee required by 37 CFR 1.18(e), the USPTO will issue a certificate of correction reflecting the PTA determination noted above.

Patentee should be aware that in order to preserve the right to review in the United States District Court for the District of Columbia of the USPTO patent term adjustment determination, patentee must ensure that he or she also take the steps required under 35 U.S.C. 154(b)(4)(A) in a timely manner. Nothing in the request for recalculation should be construed as providing an alternative time frame for commencing a civil action under 35 U.S.C. 154(b)(4)(A).

Any questions concerning this decision should be directed to the Office of Patent Legal Administration at 571-272-7702.

UNITED STATES PATENT AND TRADEMARK OFFICE

Commissioner for Patents
United States Patent and Trademark Office
P.O. Box 1450
Alexandria, VA 22313-1450
www.uspto.gov

PATTON BOGGS LLP
1801 CALFORNIA STREET
SUITE 4900
DENVER CO 80202

COPY MAILED

DEC 29 2009

OFFICE OF PETITIONS

In re Application of	:	
BEIGHTOL, Dean D. et al.	:	
Application No. 12/188,355	:	DECISION ON PETITION
Filed: August 08, 2008	:	TO WITHDRAW
Attorney Docket No. **013217.0188D1US**	:	FROM RECORD
	:	

This is a decision on the Request to Withdraw as attorney or agent of record under 37 C.F.R. § 1.36(b), filed November 16, 2009.

The request is **moot** because a revocation of power of attorney has been previously filed.

A review of the file record indicates that the power of attorney to PATTON BOGGS LLP has been revoked by the assignee of the patent application on December 23, 2009. Accordingly, the request to withdraw under 37 C.F.R. § 1.36(b) is moot.

All future communications from the Office will continue to be directed to the below-listed address until otherwise notified by applicant.

Telephone inquires concerning this decision should be directed to Tredelle Jackson at 571-272-2783.

/Tredelle D. Jackson/
Petitions Examiner
Office of Petitions

cc: **SHERIDAN ROSS P.C.**
1560 BROADWAY, SUITE 1200
DENVER, CO 80202

UNITED STATES PATENT AND TRADEMARK OFFICE

UNITED STATES DEPARTMENT OF COMMERCE
United States Patent and Trademark Office
Address: COMMISSIONER FOR PATENTS
P.O. Box 1450
Alexandria, Virginia 22313-1450
www.uspto.gov

APPLICATION NO.	FILING DATE	FIRST NAMED INVENTOR	ATTORNEY DOCKET NO.	CONFIRMATION NO.
12/188,365	08/08/2008	Russell P. Bobbitt	YOR920070783US2	4895

48915 7590 09/29/2008
CANTOR COLBURN LLP-IBM YORKTOWN
20 Church Street
22nd Floor
Hartford, CT 06103

EXAMINER
HESS, DANIEL A

ART UNIT	PAPER NUMBER
2876	

NOTIFICATION DATE	DELIVERY MODE
09/29/2008	ELECTRONIC

Please find below and/or attached an Office communication concerning this application or proceeding.

The time period for reply, if any, is set in the attached communication.

Notice of the Office communication was sent electronically on above-indicated "Notification Date" to the following e-mail address(es):

usptopatentmail@cantorcolburn.com

UNITED STATES PATENT AND TRADEMARK OFFICE

Commissioner for Patents
United States Patent and Trademark Office
P.O. Box 1450
Alexandria, VA 22313-1450
www.uspto.gov

CANTOR COLBURN LLP-IBM YORKTOWN
20 Church Street
22nd Floor
Hartford, CT 06103

In re Application of: Russell P. Bobbitt et al. Serial No.: 12/188,365 Filed: August 8, 2008 Docket No.: YOR920070783US2 Title: NON-SCAN DETECT SYSTEM FOR A RETAIL CHECKOUT STATION	DECISION ON PETITION TO MAKE SPECIAL FOR NEW APPLICATION UNDER 37 C.F.R. § 1.102 & M.P.E.P. § 708.02

This is a decision on the petition filed on August 8, 2008 and supplemented on September 10, 2008 and September 11, 2008 to make the above-identified application special for accelerated examination procedure under 37 C.F.R. §1.102.

The petition to make the application special is **GRANTED**.

The application is eligible for accelerated examination and the petition complies with the conditions for granting the application special status pursuant to the "Change to Practice for Petitions in Patent Applications to Make Special and for Accelerated Examination" published June 26, 2006, in the Federal Register. (71 Fed. Reg. 36323).

The prosecution of the instant application will be conducted expeditiously according to the following guidelines.

1. The application will be docketed to an examiner and taken up for action within two weeks of the date of this decision.

2. Restriction Practice:
   If the examiner determines that the claims are not directed to a single invention, a telephone request to elect one single invention will be made pursuant to MPEP 812.01. As a prerequisite to the grant of this petition, the applicant has agreed to make an oral election, by telephone, without traverse. If the applicant refuses to make an election without traverse, or the examiner cannot reach the applicant after a reasonable effort, the examiner will treat the first claimed invention (invention defined by claim 1) as having being constructively elected without traverse for examination.

3. Office action:
If it is determined that, after appropriate consultation, there is a potential rejection or any other issue to be addressed, the examiner will telephone the applicant and arrange an interview to discuss and resolve the issue. An Office action, other than a Notice of Allowance and Fee(s) Due (Notice of Allowance), will not be issued unless either: 1) an interview was conducted but did not result in agreed to action that places the application in condition for allowance, or, 2) a determination is made that an interview would be unlikely to result in the application being placed in condition for allowance, and 3) an internal conference has been held to review any rejection of any claim.

4. Time for Reply:
An Office action other than a Notice of Allowance or a final Office action will set a shortened statutory period of one month or thirty days, whichever is longer, for reply with no extension of time available under 37 C.F.R. §1.136(a). Failure to timely file a reply within this non-extendible period for reply will result in the abandonment of the application.

5. Reply by Applicant:
A timely reply to an Office action other than the Notice of Allowance must be submitted electronically via EFS or EFS-web and limited to addressing the rejections, objections and requirement made. Any amendment that attempts to: 1) add claims which would result in more than three pending independent claims or more than twenty pending total claims; 2) present claims not encompassed by the pre-examination search or an updated accelerated examination support document; or 3) present claims that are directed a non-elected invention or an invention other than that previously claimed and examined in the application, will be treated as not fully responsive and will not be entered.

For any amendment to the claims (including any new claim) that is not encompassed by the accelerated examination support document, applicant must provide an updated accelerated examination support document that encompasses the amended or new claims at the time of filing of the amendment.

To proceed expeditiously with the examination, it is recommended that a reply with amendments made to any claim or with any new claim being added be accompanied by an updated accelerated examination support document or a statement explaining how the amended or new claim is supported by the original accelerated examination support document.

6. Information Disclosure Statement (IDS):
Any IDS filed during prosecution must be submitted electronically via EFS or EFS-web, accompanied by an updated accelerated examination support document, and be in compliance with 37 C.F.R. §1.97 and §1.98.

7. Post-Allowance Processing:
To expedite processing of the allowed application into a patent, the applicant must: 1) pay the required fees within one month of the date of the Notice of Allowance, and 2) not

file any post allowance papers not required by the Office. In no event may the issue fee be paid and accepted later than three months from the date of the Notice of Allowance.

8. After-Final and Appeal Procedures:
   To expedite prosecution, after receiving the final Office action, applicant must: 1) promptly file a notice of appeal, an appeal brief and appeal fees; and 2) not request a pre-appeal brief conference.

   Any amendment, affidavit or other evidence filed after final Office action must comply with applicable rules and the requirements outlined in numbered paragraphs 5 and 6 above.

   On appeal, the application will proceed according to normal appeal procedures. After appeal, the application will again be treated special.

9. Proceedings Outside the Normal Examination Process:
   If the application becomes involved in a proceeding that is outside the normal examination process (e.g., a secrecy order, national security review, interference proceeding, petitions under 37 C.F.R. §1.181, §1.182 or §1.183), the application will be treated special before and after such proceeding.

10. Final Disposition:
    The twelve-month goal of this accelerated examination procedure ends with a final disposition. The mailing of a final Office action, a Notice of Allowance, the filing of a Notice of Appeal, or the filing of a Request for Continued Examination (RCE) is the final disposition.

If, during prosecution, a paper is not filed electronically using EFS-web, a reply is filed but is not fully responsive, the application is involved in an appeal, or a proceeding outside normal examination process, the application will still be examined expeditiously, however, the final disposition may occur more than twelve months from the filing of the application.

Any inquiry regarding this decision should be directed to the undersigned at (571) 272-1606.

Hien H. Phan, Quality Assurance Specialist
Technology Center 2800 - Semiconductors,
Electrical & Optical Systems & Components

HP/JC

UNITED STATES PATENT AND TRADEMARK OFFICE

Commissioner for Patents
United States Patent and Trademark Office
P.O. Box 1450
Alexandria, VA 22313-1450
www.uspto.gov

WINSTEAD PC
P.O. BOX 50784
DALLAS TX 75201

COPY MAILED

JAN 21 2009

In re Application of :
Conant :
Application No. 12/188,393 :
Filed: August 8, 2008 :
Attorney Docket No. 49046-P001US :
For: METHOD OF AND SYSTEM FOR TWO-WAY SEE-THROUGH BANNER AND WINDOW IMAGING

ON PETITION

This is a decision on the petition, filed September 25, 2008 (certificate of mailing date September 22, 2008), requesting, in effect, withdrawal of the Notice to File Missing Parts of Nonprovisional Application (Notice), mailed August 21, 2008, insofar as the Notice states that Figure 1A was omitted from the application filed on August 8, 2008. The petition will be treated under 37 CFR 1.53(e).

The petition under 37 CFR 1.53(e) is **GRANTED**.

The application was filed on August 8, 2008. On August 21, 2008, the Office of Patent Application Processing mailed a Notice informing applicant, *inter alia*, that Figure 1A was missing from the application filed on August 8, 2008.

In response to the Notice, petitioner timely filed the present petition. Petitioner requests that Figure 1A be accorded a filing date of August 8, 2008 on the basis that it was received in the Patent and Trademark Office (PTO) on August 8, 2008, when the application was filed via EFS-Web.

A review of the originally filed drawings in the application file reveals that Figure 1A was filed on August 8, 2008. Accordingly, the request is **granted**.

The $400.00 petition fee was refunded to deposit account no. 23-2426 on October 27, 2008.

It is noted that the Office mailed a Letter Regarding a New Notice and/or Status of the Application on October 29, 2008. That letter informed applicant that applicant may disregard the previous notice mailed on August 21, 2008. However, since an executed oath/declaration was still required, the October 29, 2008 letter was only partially correct. The requirement for an executed oath/declaration set by the August 21, 2008 Notice to File Missing Parts of

Nonprovisional Application was a valid requirement. It is noted that applicant filed an executed declaration and a $65.00 surcharge on October 11, 2008 (certificate of mailing date October 10, 2008), which was prior to the mailing of the October 29, 2008 letter.

As the application is complete and has been accorded the proper filing date of August 8, 2008 with all five drawing sheets as part of the original application papers, there is no need to return it to the Office of Patent Application Processing for further pre-examination processing. The application will be referred to Technology Center 3611 for examination in due course.

Any inquiries pertaining to this matter may be directed to the undersigned at (571) 272-3230.

Shirene Willis Brantley

Shirene Willis Brantley
Senior Petitions Attorney
Office of Petitions

UNITED STATES PATENT AND TRADEMARK OFFICE

UNITED STATES DEPARTMENT OF COMMERCE
United States Patent and Trademark Office
Address: COMMISSIONER FOR PATENTS
P.O. Box 1450
Alexandria, Virginia 22313-1450
www.uspto.gov

APPLICATION NO.	FILING DATE	FIRST NAMED INVENTOR	ATTORNEY DOCKET NO.	CONFIRMATION NO.
12/188,422	08/08/2008	Phil A. Berlin	100745.0001US5	4999

24392 7590 09/17/2008
FISH & ASSOCIATES, PC
ROBERT D. FISH
2603 Main Street
Suite 1050
Irvine, CA 92614-6232

EXAMINER

ART UNIT	PAPER NUMBER
3625	

MAIL DATE	DELIVERY MODE
09/17/2008	PAPER

Please find below and/or attached an Office communication concerning this application or proceeding.

The time period for reply, if any, is set in the attached communication.

UNITED STATES PATENT AND TRADEMARK OFFICE

Commissioner for Patents
United States Patent and Trademark Office
P.O. Box 1450
Alexandria, VA 22313-1450
www.uspto.gov

MAILED FROM DIRECTORS OFFICE
SEP 17 2008
TECHNOLOGY CENTER 3600

FISH & ASSOCIATES, PC
ROBERT D. FISH
2603 Main Street
Suite 1050
Irvine CA 92614-6232

In re application of	:	**DECISION ON PETITION**
Berlin et al	:	**TO MAKE SPECIAL FOR**
Application 12/188,422	:	**NEW APPLICATION**
Filed: August 8, 2008	:	**UNDER 37 CFR 1.102**

For: CENTRALIZED ELECTRONIC SALES USING A CONSOLIDATOR

This is a decision on the petition filed on August 8, 2008, to make the above-identified application special for accelerated examination procedure under 37 C.F.R. § 1.102(d).

The petition to make the application special is **DISMISSED**.

REGULATION AND PRACTICE

A grantable petition to make special under 37 C.F.R. § 1.102(d) and pursuant to the "Change to Practice for Petitions in Patent Applications to Make Special and for Accelerated Examination" published in the Federal Register on June 26, 2006 (71 Fed. Reg. 36323), must satisfy the following conditions:

I. Conditions Regarding the Application:

1. the application must be a non-reissue utility or design application filed under 37 CFR 1.111(a);

2. the application, the petition and the required fees must be filed electronically using the USPTO's electronic filing system (EFS), or EFS-web; if not filed electronically, a statement asserting that EFS and EFS-web were not available during the normal business hours.

3. at the time of filing, the application must be complete under 37 CFR 1.51 and in condition for examination;

4. the application must contain three or fewer independent claims and twenty or fewer total claims and the claims must be directed to a single invention.

II. Conditions Regarding the Petition:

The petition must:

1. be filed with the application;

2. include a statement that applicant agrees not to separately argue the patentability of any independent claim during any appeal in the application;

3. include a statement that applicant agrees to make an election without traverse in a telephone interview.

4. include a statement that applicant agrees to conduct such an interview when requested by the examiner.

5. include a statement, made based on a good faith belief, that a preexamination search in compliance with the following requirements, was conducted, including an identification of the field of search by United States class and subclass, where applicable, and for database searches, the search logic or chemical structure or sequence used as a query, the name of the file(s) searched and the database service, and the date of the search.

The preexamination search must:

5.1 involve U.S. patents and patent application publications, foreign patent documents, and non-patent literature, unless the applicant can justify with reasonable certainty that no references more pertinent than those already identified are likely to be found in the eliminated sources and includes such a justification with this statement;

5.2. be directed to the claimed invention and encompass all of the features of the claims, giving the claims the broadest reasonable interpretation;

5.3. encompass the disclosed features that may be claimed.

6. must provide in support of the petition an accelerated examination support document.

An accelerated examination support document must include:

6.1. an information disclosure statement (IDS) in compliance with 37 CFR 1.98 citing each reference deemed most closely related to the subject matter of each of the claims;

6.2. an identification of all the limitations in the claims that are disclosed by the reference specifying where the limitation is disclosed in the cited reference;

6.3. a detailed explanation of how each of the claims is patentable over the references cited with particularity required by 37 CFR 1.111(b) and (c);

6.4. a concise statement of the utility of the invention as defined in each of the independent claims (unless the application is a design application);

6.5. a showing of where each limitation of the claims finds support under 35 USC 112, first paragraph, in the written description of the specification. If applicable, the showing must also identify: (1) each means- (or step) plus-function claim element that invokes consideration under 35 USC 112, sixth paragraph; and (2) the structure, material, or acts in the specification that corresponds to each means- (or step) plus-function claim element that invokes consideration under 35 USC 112, sixth paragraph; if the application claims the benefit of one or more applications under title 35, United States Code, the showing must also include where each limitation of the claims finds support under 35 USC 112, first paragraph, in each such application in which such supports exists;

6.6. an identification of any cited references that may be disqualified under 35 USC 103(c).

REVIEW OF FACTS

The petition in this case fails to comply with conditions II.5.2 and II.6.1

Condition II.5.2 requires the preexamination search be directed to the claimed invention and encompass all of the features of the claims, giving the claims the broadest reasonable interpretation. Applicant's searches do not utilize many synonyms, thereby overly narrowing the search queries. For example, Applicant has overly limited the searches by limiting the text searches to the abstract, Claims, Titles or Abstract, and class/subclass and Full patent spec. The searches on page 8 are also limited to with priority dates, however it is not reflected in the actual search logic.

A recommended search might be executed in all databases of **West** with the following search queries:

L1: ((amass$ or collect$3 or sum$ or cummulat$ or combin$) same (order$1 or request$1 or inquir$))

L2: L1 near5 (commission$ or bonus$ or cash or money$ or incentive$ or pay$ or fee$ or salary or salarie$ or compensat$)

Please keep in mind that these are non-limiting search suggestions and they are only meant to serve as a possible starting point for Applicant's preexamination search. Additional guidance regarding the proper manner of performing and documenting a preexamination search may be found on the following web site: http://www.uspto.gov/web/patents/accelerated/ Applicant is expected to perform more supplemental searches than the sample search queries listed above.

As to condition II.5.2, Applicant asserts that the feature of "the combination of a consolidator taking an order and the consolidator receiving a commission generated from an order "contribute to the patentability of the claimed invention. However, Applicant's searches are not directed toward the details of such claimed feature; therefore, this feature should be searched as well.

As to Condition II.5.2, the classification search fails to include prior art that published after December 17, 2007, almost eight months before the Accelerated Examination petition was filed. It is important to keep the classification search as current as possible in order to account for any recently issued references that may qualify as a 102(e) dated reference.

As to condition II.6.1, an information disclosure statement (IDS) in compliance with 37 CFR 1.98 must cite each reference deemed most closely related to the subject matter of each of the claims. The Support Document on pages 5 through 10 discusses Dworkin. However it is noted that Dworkin is not listed in the IDS.

Further, Section 9(c) (Detailed Explanation of Claims Patentability) discusses Dworkin and Froogle. However it is noted that Dworkin and Froogle are not listed in the IDS. Therefore, the IDS is not in compliance with this condition.

The petition fails to meet the required conditions to be accorded special status under the accelerated examination procedure.

DECISION

For the above stated reasons, the petition is **DISMISSED**. The application will therefore be taken up by the examiner for action in its regular turn.

Petitioner is given a single opportunity to perfect the petition. Any request for reconsideration of this decision must be submitted within one (1) month or thirty (30) days, whichever is longer, from the date of this decision. No extensions of time will be granted under 37 CFR 1.136(a) if the request is to be considered timely. Any request for reconsideration must address the deficiencies indicated above.

Petitioner is reminded that, upon granting of the special status of the application on request for reconsideration, the application will be processed expeditiously. However, due to the dismissal of the instant petition, examination may not be completed within twelve months of the filing date of the application.

Any inquiry regarding this decision should be directed to Robert Weinhardt, Business Practice Specialist, at (571) 272-6633, or Romain Jeanty, Primary Examiner, at (571) 272-6732.

C. Michelle Tarau for

Robert A. Weinhardt,
Business Practice Specialist
Technology Center 3600

RW/RJ/ 9/15/08

UNITED STATES PATENT AND TRADEMARK OFFICE

UNITED STATES DEPARTMENT OF COMMERCE
United States Patent and Trademark Office
Address: COMMISSIONER FOR PATENTS
P.O. Box 1450
Alexandria, Virginia 22313-1450
www.uspto.gov

APPLICATION NO.	FILING DATE	FIRST NAMED INVENTOR	ATTORNEY DOCKET NO.	CONFIRMATION NO.
12/188,422	08/08/2008	Phil A. Berlin	100745.0001US5	4999

24392 7590 11/18/2008
FISH & ASSOCIATES, PC
ROBERT D. FISH
2603 Main Street
Suite 1050
Irvine, CA 92614-6232

EXAMINER

ART UNIT	PAPER NUMBER
3625	

MAIL DATE	DELIVERY MODE
11/18/2008	PAPER

Please find below and/or attached an Office communication concerning this application or proceeding.

The time period for reply, if any, is set in the attached communication.

UNITED STATES PATENT AND TRADEMARK OFFICE

Commissioner for Patents
United States Patent and Trademark Office
P.O. Box 1450
Alexandria, VA 22313-1450
www.uspto.gov

FISH & ASSOCIATES, PC
ROBERT D. FISH
2603 Main Street
Suite 1050
Irvine CA 92614-6232

In re application of	:	**DECISION ON PETITION**
Berlin et al.	:	**TO MAKE SPECIAL FOR**
Application No. 12/188,422	:	**NEW APPLICATION**
Filed: August 8, 2008	:	**UNDER 37 CFR 1.102**

For: CENTRALIZED ELECTRONIC SALES USING A CONSOLIDATOR

This is a decision on the petition filed on August 8, 2008 to make the above-identified application special for accelerated examination procedure under 37 C.F.R. § 1.102(d).

The petition to make the application special is **GRANTED**.

The application is eligible for accelerated examination and the petition complies with the conditions for granting the application special status pursuant to the "Change to Practice for Petitions in Patent Applications to Make Special and for Accelerated Examination" published June 26, 2006, in the Federal Register. (71 Fed. Reg. 36323).

The prosecution of the instant application will be conducted expeditiously according to the following guidelines.

1. The application will be docketed to an examiner and taken up for action within two weeks of the date of this decision.

2. Restriction Practice:
   If the examiner determines that the claims are not directed to a single invention, a telephone request to elect one single invention will be made pursuant to MPEP 812.01. As a prerequisite to the grant of this petition, the applicant has agreed to make an oral election, by telephone, without traverse. If the applicant refuses to make an election without traverse, or the examiner cannot reach the applicant after a reasonable effort, the examiner will treat the

first claimed invention (invention defined by claim 1) as having being constructively elected without traverse for examination.

3. Office action:
   If it is determined that, after appropriate consultation, there is a potential rejection or any other issue to be addressed, the examiner will telephone the applicant and arrange an interview to discuss and resolve the issue. An Office action, other than a Notice of Allowance and Fee(s) Due (Notice of Allowance), will not be issued unless either: 1) an interview was conducted but did not result in agreed to action that places the application in condition for allowance, or, 2) a determination is made that an interview would be unlikely to result in the application being placed in condition for allowance, and 3) an internal conference has been held to review any rejection of any claim.

4. Time for Reply:
   An Office action other than a Notice of Allowance or a final Office action will set a shortened statutory period of one month or thirty days, whichever is longer, for reply with no extension of time available under 37 CFR 1.136(a). Failure to timely file a reply within this non-extendible period for reply will result in the abandonment of the application.

5. Reply by Applicant:
   A timely reply to an Office action other than the Notice of Allowance must be submitted electronically via EFS or EFS-web and limited to addressing the rejections, objections and requirement made. Any amendment that attempts to: 1) add claims which would result in more than three pending independent claims or more than twenty pending total claims; 2) present claims not encompassed by the pre-examination search or an updated accelerated examination support document; or 3) present claims that are directed to a non-elected invention or an invention other than that previously claimed and examined in the application, will be treated as not fully responsive and will not be entered.

   For any amendment to the claims (including any new claim) that is not encompassed by the accelerated examination support document, applicant must provide an updated accelerated examination support document that encompasses the amended or new claims at the time of filing of the amendment.

   To proceed expeditiously with the examination, it is recommended that a reply with amendments made to any claim or with any new claim being added be accompanied by an updated accelerated

examination support document or a statement explaining how the amended or new claim is supported by the original accelerated examination support document.

6. Information Disclosure Statement (IDS):
   Any IDS filed during prosecution must be submitted electronically via EFS or EFS-web, accompanied by an updated accelerated examination support document, and be in compliance with 37 CFR 1.97 and 1.98.

7. Post-Allowance Processing:
   To expedite processing of the allowed application into a patent, the applicant must: 1) pay the required fees within one month of the date of the Notice of Allowance, and 2) not file any post allowance papers not required by the Office. In no event may the issue fee be paid and accepted later than three months from the date of the Notice of Allowance.

8. After-Final and Appeal Procedures:
   To expedite prosecution, after receiving the final Office action, applicant must: 1) promptly file a notice of appeal, an appeal brief and appeal fees; and 2) not request a pre-appeal brief conference.

   Any amendment, affidavit or other evidence filed after final Office action must comply with applicable rules and the requirements outlined in numbered paragraphs 5 and 6 above.

   On appeal, the application will proceed according to normal appeal procedures. After appeal, the application will again be treated special.

9. Proceedings Outside the Normal Examination Process:
   If the application becomes involved in a proceeding that is outside the normal examination process (e.g., a secrecy order, national security review, interference proceeding, petitions under 37 CFR 1.181, 182 or 183), the application will be treated special before and after such proceeding.

10. Final Disposition:
    The twelve month goal of this accelerated examination procedure ends with a final disposition. The mailing of a final Office action, a Notice of Allowance, the filing of a Notice of Appeal, or the filing of a Request for Continued Examination (RCE) is the final disposition.

    If, during prosecution, a paper is not filed electronically using EFS-web, a reply is filed but is not fully responsive, the application is

involved in an appeal, or a proceeding outside normal examination process, the application will still be examined expeditiously, however, the final disposition may occur more than twelve months from the filing of the application.

Any inquiry regarding this decision should be directed to C. Michelle Tarae at (571) 272-6727, or Robert Weinhardt at (571) 272-6633, both Business Practice Specialists.

C. Michelle Tarae

C. Michelle Tarae
Business Practice Specialist
Technology Center 3600

CMT/RW/11/17/08

UNITED STATES PATENT AND TRADEMARK OFFICE

UNITED STATES DEPARTMENT OF COMMERCE
United States Patent and Trademark Office
Address: COMMISSIONER FOR PATENTS
P.O. Box 1450
Alexandria, Virginia 22313-1450
www.uspto.gov

APPLICATION NO.	FILING DATE	FIRST NAMED INVENTOR	ATTORNEY DOCKET NO.	CONFIRMATION NO.
12/188,582	08/08/2008	MARK J. BURK	066662-0189	5303

41552 7590 03/02/2010
MCDERMOTT, WILL & EMERY
11682 EL CAMINO REAL
SUITE 400
SAN DIEGO, CA 92130-2047

EXAMINER
ZUCKER, PAUL A

ART UNIT	PAPER NUMBER
1621	

NOTIFICATION DATE	DELIVERY MODE
03/02/2010	ELECTRONIC

Please find below and/or attached an Office communication concerning this application or proceeding.

The time period for reply, if any, is set in the attached communication.

Notice of the Office communication was sent electronically on above-indicated "Notification Date" to the following e-mail address(es):

SIP_Docket@mwe.com

UNITED STATES PATENT AND TRADEMARK OFFICE

Commissioner for Patents
United States Patent and Trademark Office
P.O. Box 1450
Alexandria, VA 22313-1450
www.uspto.gov

MCDERMOTT, WILL & EMERY
11682 EL CAMINO REAL
SUITE 400
SAN DIEGO CA 92130-2047

MAR 0 1 2010

In re Application of	:	
Mark, BURK et al.	:	DECISION ON PETITION
Application No.12/188582	:	TO MAKE SPECIAL UNDER
Filed: August 8, 2008	:	THE GREEN TECHNOLOGY
Attorney Docket No. 066662-0189	:	PILOT PROGRAM

This is a decision on the petition under 37 CFR 1.102, filed February 5th, 2010, to make the above-identified application special under the pilot program for applications pertaining to Green Technologies as set forth 74 Federal Register Notice 64666 (December 8, 2009).

The petition is **GRANTED**.

A grantable petition to make an application special under 37 CFR 1.102 and the pilot program as set forth in 74 FR 64666 must be directed to a nonprovisional application filed under 35 USC 111(a) or be a national stage entry under 35 USC 371, exclusive of any reissue applications and be filed prior to the date of the notice, December 8, 2009.

In order to qualify for special status, the following requirements must be met. 1) The application must be classified in one of the eligible US classifications listed in section VI of the notice. 2) The application must have no more than 3 independent claims and no more than 20 total claims. 3) The application must not contain any multiple dependent claims. 4) The petition must state the basis for seeking special status, i.e., the claimed invention either: A) materially enhances the quality of the environment or B) materially contributes to: i) the discovery or development of renewable energy resources, ii) the more efficient utilization and conservation of energy resources, or iii) greenhouse gas emission reduction. 5) If the disclosure is not clear on its face that the claimed invention materially contributes under category (A) or (B), the petition must be accompanied by a statement by the applicant, assignee, or an attorney/agent registered to practice before the Office explaining how the materiality standard is met. 6) A statement that applicant will agree to make an election without traverse in a telephonic interview if a restriction requirement is made by the examiner. 7) The petition to make special must be filed electronically. 8) The petition must be filed at least one day prior to the date that a first Office Action appears in the Patent Application Information Retrieval (PAIR) system. 9) The petition must be accompanied by a request for early publication in compliance with 37 CFR 1.219 and include the publication fee as set forth in 37 CFR 1.18(d).

The requirement for a fee for consideration of the petition to make special for applications pertaining to Green Technologies has been waived.

The instant petition complies with items 1–9 above. Accordingly, the above-identified application has been accorded "special" status.

Telephone inquires concerning this decision should be directed to Manjunath Rao at 571-272-0939.

The application is being forwarded to the Technology Center Art Unit 1621 for action on the merits commensurate with this decision.

/Manjunath Rao/

Manjunath Rao
Supervisory Patent Examiner
Technology Center 1600

UNITED STATES PATENT AND TRADEMARK OFFICE

UNITED STATES DEPARTMENT OF COMMERCE
United States Patent and Trademark Office
Address: COMMISSIONER FOR PATENTS
P.O. Box 1450
Alexandria, Virginia 22313-1450
www.uspto.gov

APPLICATION NO.	FILING DATE	FIRST NAMED INVENTOR	ATTORNEY DOCKET NO.	CONFIRMATION NO.
12/188,586	08/08/2008	James C. Lanter	PRD2221USDIV1	5309

27777 7590 02/26/2010
PHILIP S. JOHNSON
JOHNSON & JOHNSON
ONE JOHNSON & JOHNSON PLAZA
NEW BRUNSWICK, NJ 08933-7003

EXAMINER
RAHMANI, NILOOFAR

ART UNIT	PAPER NUMBER
1625	

NOTIFICATION DATE	DELIVERY MODE
02/26/2010	ELECTRONIC

Please find below and/or attached an Office communication concerning this application or proceeding.

The time period for reply, if any, is set in the attached communication.

Notice of the Office communication was sent electronically on above-indicated "Notification Date" to the following e-mail address(es):

jnjuspatent@corus.jnj.com
lhowd@its.jnj.com
gsanche@its.jnj.com

UNITED STATES PATENT AND TRADEMARK OFFICE

Commissioner for Patents
United States Patent and Trademark Office
P.O. Box 1450
Alexandria, VA 22313-1450
www.uspto.gov

PHILIP S. JOHNSON
JOHNSON & JOHNSON
ONE JOHNSON & JOHNSON PLAZA
NEW BRUNSWICK NJ 08933-7003

FEB 2 6 2010

In re Application of :
Lanter et al.
Serial No.: 12/188,586
Filed: August 8, 2008
Attorney Docket No.: **PRD2221USDIV1**

: PETITION DECISION

This is in response to the petition under 37 CFR § 1.59(b), filed February 18, 2010, to expunge information from the above identified application. This application has been allowed.

Petitioner requests that the Document submitted on February 17, 2010 be expunged from the record as it was unintentionally submitted in this application. Petitioner states either: (A) that the information contains trade secret material, proprietary material and/or material that is subject to a protective order which has not been made public; or (B) that the information submitted was unintentionally submitted and the failure to obtain its return would cause irreparable harm to the party who submitted the information or to the party in interest on whose behalf the information was submitted, and the information has not otherwise been made public. The petition fee set forth in 37 CFR § 1.17(g) has been paid.

The reasons set forth in this petition establishes to the satisfaction of the Director that expungement of the information is appropriate. The file entry for this document has been closed and as such the document is no longer publicly available, which is the IFW equivalent to removal of a paper document from a paper file wrapper.

Therefore, petitioner's petition is GRANTED.

Should there be any questions about this decision please contact Marianne C. Seidel by letter addressed to Director, TC 1600, at the address listed above, or by telephone at 571-272-0584 or by facsimile sent to the general Office facsimile number, 703-872-9306.

Marianne C. Seidel
Quality Assurance Specialist
Technology Center 1600

UNITED STATES PATENT AND TRADEMARK OFFICE

Commissioner for Patents
United States Patent and Trademark Office
P.O. Box 1450
Alexandria, VA 22313-1450
www.uspto.gov

POTOMAC PATENT GROUP PLLC
P. O. BOX 270
FREDERICKSBURG VA 22404

COPY MAILED
FEB 17 2010

In re Application of	:	
Liberty	:	
Application No. 12/188,595	:	NOTICE
Filed: 08/08/2008	:	
Attorney Docket No. 0320-057 CONT3	:	

This is a notice regarding your request for acceptance of a fee deficiency submission under 37 CFR 1.28 filed December 11, 2009.

The Office no longer investigates or rejects original or reissue applications under 37 CFR 1.56. 1098 Off. Gaz. Pat. Office 502 (January 3, 1989). Therefore, nothing in this Notice is intended to imply that an investigation was done.

Your fee deficiency submission under 37 CFR 1.28 is hereby ACCEPTED.

This application is no longer entitled to small entity status. Accordingly, all future fees paid in this application must be paid at the large entity rate.

Inquiries related to this communication should be directed to the undersigned at (571) 272-3211.

C. T. Donnell

Christina Tartera Donnell
Senior Petitions Attorney
Office of Petitions

UNITED STATES PATENT AND TRADEMARK OFFICE

Commissioner for Patents
United States Patent and Trademark Office
P.O. Box 1450
Alexandria, VA 22313-1450
www.uspto.gov

MAILED

MAY 07 2010

OFFICE OF PETITIONS

BROWDY AND NEIMARK, P.L.L.C.
624 NINTH STREET, NW
SUITE 300
WASHINGTON DC 20001-5303

In re Application of:	: DECISION DISMISSING PETITION
Moshe Finarov	: UNDER 37 CFR 1.78(a)(3)
Application No. 12/188624	:
Filing or 371(c) Date: 08/08/2008	:
Attorney Docket No. DVIR=1C	:

This is a decision on the "Petition Under 37 CFR 1.78(a)(3) to Accept an Unintentionally Delayed Claim Under 35 U.S.C. § 120 for the Benefit of a Prior-filed Application," filed March 4, 2010, as set forth in the Application Data Sheet filed with the present petition.

The petition is **DISMISSED.**

A petition for acceptance of a claim for late priority under 37 CFR 1.78(a)(3) is only applicable to those applications filed on or after November 29, 2000. Further, the petition is appropriate only after the expiration of the period specified in 37 CFR 1.78(a)(2)(ii). In addition, the petition under 37 CFR 1.78(a)(3) must be accompanied by:

(1) the reference required by 35 U.S.C. § 120 and 37 CFR 1.78(a)(2)(i) of the prior-filed application, unless previously submitted;
(2) the surcharge set forth in § 1.17(t); and
(3) a statement that the entire delay between the date the claim was due under 37 CFR 1.78(a)(2)(ii) and the date the claim was filed was unintentional. The Director may require additional information where there is a question whether the delay was unintentional.

The petition does not comply with item **(1)**

The petition is not acceptable since copendency does not exist between application no. 12/188,624, filed August 8, 2008, and application no. 11/698,878, abandoned on May 13, 2008, for which the benefit is sought. 35 U.S.C. § 120 permits a continuing application to claim the

benefit of the filing date of a copending, previously filed, parent application provided there is inventorship overlap between the continuing application and the parent application. Here, the application for which the benefit is sought, 10/287,066, issued as a patent more than one year before the above-identified application was filed. As such, there is no copendency between the applications.

Before the petition under 37 CFR § 1.78(a)(3) can be granted, the priority chain in the prior-filed applications must be perfected, and a renewed petition under 37 CFR § 1.78(a)(3) and an Application Data Sheet or a substitute amendment (complying with 35 U.S.C. 120; 37 CFR 1.121 and 37 CFR 1.76(b)(5)), are required.

Further correspondence with respect to this matter should be addressed as follows:

By mail: Mail Stop PETITIONS
Commissioner for Patents
Post Office Box 1450
Alexandria, VA 22313-1450

By hand: Customer Service Window
Mail Stop Petitions
Randolph Building
401 Dulany Street
Alexandria, VA 22314

By fax: (571) 273-8300
ATTN: Office of Petitions

Any questions concerning this matter may be directed to Derek Woods at (571) 272-3232.

Christopher Bottorff
Supervisor
Office of Petitions

UNITED STATES PATENT AND TRADEMARK OFFICE

Commissioner for Patents
United States Patent and Trademark Office
P.O. Box 1450
Alexandria, VA 22313-1450
www.uspto.gov

BROWDY AND NEIMARK, P.L.L.C.
624 NINTH STREET, NW
SUITE 300
WASHINGTON DC 20001-5303

MAILED

MAY 13 2010

OFFICE OF PETITIONS

In re Application of:
Moshe Finarov
Application No. 12/188624
Filing or 371(c) Date: 08/08/2008
Attorney Docket No. DVIR=1C

: CORRECTED
DECISION GRANTING PETITION
: UNDER 37 CFR 1.78(a)(3)
:
:
:

This is a decision on the "Petition Under 37 CFR 1.78(a)(3) to Accept an Unintentionally Delayed Claim Under 35 U.S.C. § 120 for the Benefit of a Prior-filed Application," filed March 4, 2010, as set forth in the Application Data Sheet filed with the present petition.

The petition is **GRANTED**.

A petition for acceptance of a claim for late priority under 37 CFR 1.78(a)(3) is only applicable to those applications filed on or after November 29, 2000. Further, the petition is appropriate only after the expiration of the period specified in 37 CFR 1.78(a)(2)(ii). In addition, the petition under 37 CFR 1.78(a)(3) must be accompanied by:

(1) the reference required by 35 U.S.C. § 120 and 37 CFR 1.78(a)(2)(i) of the prior-filed application, unless previously submitted;
(2) the surcharge set forth in § 1.17(t); and
(3) a statement that the entire delay between the date the claim was due under 37 CFR 1.78(a)(2)(ii) and the date the claim was filed was unintentional. The Director may require additional information where there is a question whether the delay was unintentional.

All of the above requirements having been satisfied, the late claim for priority under 35 U.S.C. § 120 is accepted as being unintentionally delayed.

The granting of the petition to accept the delayed benefit claim to the prior-filed applications under 37 CFR 1.78(a)(3) should not be construed as meaning that this application is entitled to the benefit of the prior-filed applications. In order for this application to be entitled to the benefit of the prior-filed applications, all other requirements under 35 U.S.C. § 120 and 37 CFR 1.78(a)(1) and (a)(2) must be met. Similarly, the fact that the corrected Filing Receipt accompanying this decision on petition includes the prior-filed applications should not be construed as meaning that applicant is entitled to the claim for benefit of priority to the prior-filed applications noted thereon. Accordingly, the examiner will, in due course, consider this benefit claim and determine whether the application is entitled to the benefit of the earlier filing date.

A corrected Filing Receipt, which includes the priority claim to the prior-filed nonprovisional applications, accompanies this decision on petition.

Any inquiries concerning this decision may be directed to Derek Woods at (571) 272-3232. All other inquiries concerning either the examination procedures or status of the application should be directed to the Technology Center.

This application is being forwarded to Technology Center Art Unit 3723 for consideration by the examiner of applicant's entitlement to claim benefit of priority under 35 U.S.C. § 120 to the prior-filed applications.

Any questions concerning this matter may be directed to Derek Woods at (571) 272-3232.

Christopher Bottorff
Supervisor
Office of Petitions

ATTACHMENT: Corrected Filing Receipt

UNITED STATES PATENT AND TRADEMARK OFFICE

UNITED STATES DEPARTMENT OF COMMERCE
United States Patent and Trademark Office
Address: COMMISSIONER FOR PATENTS
P.O. Box 1450
Alexandria, Virginia 22313-1450
www.uspto.gov

APPLICATION NUMBER	FILING or 371(c) DATE	GRP ART UNIT	FIL FEE REC'D	ATTY.DOCKET.NO	TOT CLAIMS	IND CLAIMS
12/188,624	08/08/2008	3723	560	DVIR=1C	25	3

CONFIRMATION NO. 5370

CORRECTED FILING RECEIPT

1444
BROWDY AND NEIMARK, P.L.L.C.
624 NINTH STREET, NW
SUITE 300
WASHINGTON, DC 20001-5303

OC000000041572120

Date Mailed: 05/11/2010

Receipt is acknowledged of this non-provisional patent application. The application will be taken up for examination in due course. Applicant will be notified as to the results of the examination. Any correspondence concerning the application must include the following identification information: the U.S. APPLICATION NUMBER, FILING DATE, NAME OF APPLICANT, and TITLE OF INVENTION. Fees transmitted by check or draft are subject to collection. Please verify the accuracy of the data presented on this receipt. **If an error is noted on this Filing Receipt, please submit a written request for a Filing Receipt Correction. Please provide a copy of this Filing Receipt with the changes noted thereon. If you received a "Notice to File Missing Parts" for this application, please submit any corrections to this Filing Receipt with your reply to the Notice. When the USPTO processes the reply to the Notice, the USPTO will generate another Filing Receipt incorporating the requested corrections**

Applicant(s)

Moshe Finarov, Rehovot, ISRAEL;

Assignment For Published Patent Application

NOVA MEASURING INSTRUMENTS LTD, Rehovot, ISRAEL

Power of Attorney: The patent practitioners associated with Customer Number 001444

Domestic Priority data as claimed by applicant

This application is a DIV of 11/698,878 01/29/2007 ABN
which is a CON of 10/860,019 06/04/2004 PAT 7,169,015
which is a CON of 09/898,467 07/05/2001 PAT 6,752,689
which is a CON of 09/498,926 02/04/2000 PAT 6,368,181
which is a CON of 08/497,382 06/29/1995 PAT 6,045,433

Foreign Applications

ISRAEL 113829 05/23/1995

If Required, Foreign Filing License Granted: 08/21/2008

The country code and number of your priority application, to be used for filing abroad under the Paris Convention, is **US 12/188,624**

Projected Publication Date: Not Applicable

Non-Publication Request: No

Early Publication Request: No
**** SMALL ENTITY ****

Title

APPARATUS FOR OPTICAL INSPECTION OF WAFERS DURING POLISHING

Preliminary Class

451

PROTECTING YOUR INVENTION OUTSIDE THE UNITED STATES

Since the rights granted by a U.S. patent extend only throughout the territory of the United States and have no effect in a foreign country, an inventor who wishes patent protection in another country must apply for a patent in a specific country or in regional patent offices. Applicants may wish to consider the filing of an international application under the Patent Cooperation Treaty (PCT). An international (PCT) application generally has the same effect as a regular national patent application in each PCT-member country. The PCT process **simplifies** the filing of patent applications on the same invention in member countries, but **does not result** in a grant of "an international patent" and does not eliminate the need of applicants to file additional documents and fees in countries where patent protection is desired.

Almost every country has its own patent law, and a person desiring a patent in a particular country must make an application for patent in that country in accordance with its particular laws. Since the laws of many countries differ in various respects from the patent law of the United States, applicants are advised to seek guidance from specific foreign countries to ensure that patent rights are not lost prematurely.

Applicants also are advised that in the case of inventions made in the United States, the Director of the USPTO must issue a license before applicants can apply for a patent in a foreign country. The filing of a U.S. patent application serves as a request for a foreign filing license. The application's filing receipt contains further information and guidance as to the status of applicant's license for foreign filing.

Applicants may wish to consult the USPTO booklet, "General Information Concerning Patents" (specifically, the section entitled "Treaties and Foreign Patents") for more information on timeframes and deadlines for filing foreign patent applications. The guide is available either by contacting the USPTO Contact Center at 800-786-9199, or it can be viewed on the USPTO website at http://www.uspto.gov/web/offices/pac/doc/general/index.html.

For information on preventing theft of your intellectual property (patents, trademarks and copyrights), you may wish to consult the U.S. Government website, http://www.stopfakes.gov. Part of a Department of Commerce initiative, this website includes self-help "toolkits" giving innovators guidance on how to protect intellectual property in specific countries such as China, Korea and Mexico. For questions regarding patent enforcement issues, applicants may call the U.S. Government hotline at 1-866-999-HALT (1-866-999-4158).

LICENSE FOR FOREIGN FILING UNDER

Title 35, United States Code, Section 184

Title 37, Code of Federal Regulations, 5.11 & 5.15

GRANTED

The applicant has been granted a license under 35 U.S.C. 184, if the phrase "IF REQUIRED, FOREIGN FILING LICENSE GRANTED" followed by a date appears on this form. Such licenses are issued in all applications where the conditions for issuance of a license have been met, regardless of whether or not a license may be required as

set forth in 37 CFR 5.15. The scope and limitations of this license are set forth in 37 CFR 5.15(a) unless an earlier license has been issued under 37 CFR 5.15(b). The license is subject to revocation upon written notification. The date indicated is the effective date of the license, unless an earlier license of similar scope has been granted under 37 CFR 5.13 or 5.14.

This license is to be retained by the licensee and may be used at any time on or after the effective date thereof unless it is revoked. This license is automatically transferred to any related applications(s) filed under 37 CFR 1.53(d). This license is not retroactive.

The grant of a license does not in any way lessen the responsibility of a licensee for the security of the subject matter as imposed by any Government contract or the provisions of existing laws relating to espionage and the national security or the export of technical data. Licensees should apprise themselves of current regulations especially with respect to certain countries, of other agencies, particularly the Office of Defense Trade Controls, Department of State (with respect to Arms, Munitions and Implements of War (22 CFR 121-128)); the Bureau of Industry and Security, Department of Commerce (15 CFR parts 730-774); the Office of Foreign AssetsControl, Department of Treasury (31 CFR Parts 500+) and the Department of Energy.

NOT GRANTED

No license under 35 U.S.C. 184 has been granted at this time, if the phrase "IF REQUIRED, FOREIGN FILING LICENSE GRANTED" DOES NOT appear on this form. Applicant may still petition for a license under 37 CFR 5.12, if a license is desired before the expiration of 6 months from the filing date of the application. If 6 months has lapsed from the filing date of this application and the licensee has not received any indication of a secrecy order under 35 U.S.C. 181, the licensee may foreign file the application pursuant to 37 CFR 5.15(b).

UNITED STATES PATENT AND TRADEMARK OFFICE

Commissioner for Patents
United States Patent and Trademark Office
P.O. Box 1450
Alexandria, VA 22313-1450
www.uspto.gov

COOLEY GODWARD KRONISH LLP
ATTN: PATENT GROUP
SUITE 1100
777 – 6TH STREET, NW
WASHINGTON, DC 20001

MAILED

SEP 22 2009

OFFICE OF PETITIONS

In re Application of	:	
Latchezar I. Tsonev	:	
Application No. 12/188,632	:	DECISION ON PETITION
Filed: August 8, 2008	:	TO WITHDRAW
Attorney Docket No. CRYO-004/03US	:	FROM RECORD
	:	

This is a decision on the Request to Withdraw as attorney or agent under 37 C.F.R. § 1.36(b) filed August 5, 2009.

The request is **NOT APPROVED**.

A review of the file record indicates that Cooley, Goward, Kronish, LLP does not have power of attorney in this patent application. See 37 C.F.R. § 10.40. Accordingly, the request to withdraw under 37 C.F.R. § 1.36(b) is not applicable.

All future communications from the Office will continue to be directed to the below-listed address until otherwise properly notified by the applicant.

Telephone inquires concerning this decision should be directed to undersigned at 571-272-1642. All other inquiries concerning the examination or status of this application should be directed to the Technology Center.

/AMW/
April M. Wise
Petitions Examiner
Office of Petitions

cc: CRYOBIOPHYSICA, INC.
12111 PARKLAWN DRIVE
ROCKVILLE, MD 20852

UNITED STATES PATENT AND TRADEMARK OFFICE

UNITED STATES DEPARTMENT OF COMMERCE
United States Patent and Trademark Office
Address: COMMISSIONER FOR PATENTS
P.O. Box 1450
Alexandria, Virginia 22313-1450
www.uspto.gov

John J. Oskorep, Esq. LLC
980 North Michigan Avenue, Suite 1400
One Magnificent Mile Center
Chicago, IL 60611

Mail Date: 04/26/2010

Applicant	: Paul M. Carpenter	: DECISION ON REQUEST FOR
Patent Number	: 7623878	: RECALCULATION of PATENT
Issue Date	: 11/24/2009	: TERM ADJUSTMENT IN VIEW
Application No	: 12/188,647	: OF WYETH AND NOTICE OF INTENT TO
Filed	: 08/08/2008	: ISSUE CERTIFICATE OF CORRECTION
		:

The Request for Recalculation is **GRANTED** to the extent indicated.

The patent term adjustment has been determined to be **0** days. The USPTO will *sua sponte* issue a certificate of correction reflecting the amount of PTA days determined by the recalculation.

Prior to the issuance of the certificate of correction, the USPTO will afford patentee an opportunity to be heard and request reconsideration. Accordingly, patentee has **one month or thirty (30) days**, whichever is longer, to file a request for reconsideration of this patent term adjustment calculation. See 35 U.S.C. 154(b)(3)(B)(ii) and 37 CFR 1.322(a)(4). No extensions of time will be granted under 37 CFR 1.136.

Patentee should use document code PET.OP if electronically filing a request for reconsideration of this patent term adjustment calculation. The patentee must also include the information required by 37 CFR 1.705(b)(2) and the fee required by 37 CFR 1.18(e). If patentee does not file a timely request for reconsideration of this patent term adjustment calculation including the information required by 37 CFR 1.705(b)(2) and the fee required by 37 CFR 1.18(e), the USPTO will issue a certificate of correction reflecting the PTA determination noted above.

Patentee should be aware that in order to preserve the right to review in the United States District Court for the District of Columbia of the USPTO patent term adjustment determination, patentee must ensure that he or she also take the steps required under 35 U.S.C. 154(b)(4)(A) in a timely manner. Nothing in the request for recalculation should be construed as providing an alternative time frame for commencing a civil action under 35 U.S.C. 154(b)(4)(A).

Any questions concerning this decision should be directed to the Office of Patent Legal Administration at 571-272-7702.

UNITED STATES PATENT AND TRADEMARK OFFICE

UNITED STATES DEPARTMENT OF COMMERCE
United States Patent and Trademark Office
Address: COMMISSIONER FOR PATENTS
P.O. Box 1450
Alexandria, Virginia 22313-1450
www.uspto.gov

BANNER & WITCOFF, LTD.
1100 13th STREET, N.W.
SUITE 1200
WASHINGTON, DC 20005-4051

Mail Date: 04/21/2010

Applicant	: Yuji Nakamura	: DECISION ON REQUEST FOR
Patent Number	: 7632106	: RECALCULATION of PATENT
Issue Date	: 12/15/2009	: TERM ADJUSTMENT IN VIEW
Appliction No	: 12/188,684	: OF WYETH AND NOTICE OF INTENT TO
Filed	: 08/08/2008	: ISSUE CERTIFICATE OF CORRECTION
		:

The Request for Recalculation is **GRANTED** to the extent indicated.

The patent term adjustment has been determined to be **0** days. The USPTO will *sua sponte* issue a certificate of correction reflecting the amount of PTA days determined by the recalculation.

Prior to the issuance of the certificate of correction, the USPTO will afford patentee an opportunity to be heard and request reconsideration. Accordingly, patentee has **one month or thirty (30) days**, whichever is longer, to file a request for reconsideration of this patent term adjustment calculation. See 35 U.S.C. 154(b)(3)(B)(ii) and 37 CFR 1.322(a)(4). No extensions of time will be granted under 37 CFR 1.136.

Patentee should use document code PET.OP if electronically filing a request for reconsideration of this patent term adjustment calculation. The patentee must also include the information required by 37 CFR 1.705(b)(2) and the fee required by 37 CFR 1.18(e). If patentee does not file a timely request for reconsideration of this patent term adjustment calculation including the information required by 37 CFR 1.705(b)(2) and the fee required by 37 CFR 1.18(e), the USPTO will issue a certificate of correction reflecting the PTA determination noted above.

Patentee should be aware that in order to preserve the right to review in the United States District Court for the District of Columbia of the USPTO patent term adjustment determination, patentee must ensure that he or she also take the steps required under 35 U.S.C. 154(b)(4)(A) in a timely manner. Nothing in the request for recalculation should be construed as providing an alternative time frame for commencing a civil action under 35 U.S.C. 154(b)(4)(A).

Any questions concerning this decision should be directed to the Office of Patent Legal Administration at 571-272-7702.

UNITED STATES PATENT AND TRADEMARK OFFICE

UNITED STATES DEPARTMENT OF COMMERCE
United States Patent and Trademark Office
Address: COMMISSIONER FOR PATENTS
P.O. Box 1450
Alexandria, Virginia 22313-1450
www.uspto.gov

APPLICATION NO.	FILING DATE	FIRST NAMED INVENTOR	ATTORNEY DOCKET NO.	CONFIRMATION NO.
12/188,685	08/08/2008	Susan W. Brosnan	RPS920070255US2	5481

59369 7590 09/12/2008
CANTOR COLBURN LLP - IBM RESEARCH TRIANGLE PARK
20 Church Street
22nd Floor
Hartford, CT 06103

EXAMINER

ART UNIT	PAPER NUMBER
2612	

MAIL DATE	DELIVERY MODE
09/12/2008	PAPER

Please find below and/or attached an Office communication concerning this application or proceeding.

The time period for reply, if any, is set in the attached communication.

UNITED STATES PATENT AND TRADEMARK OFFICE

Commissioner for Patents
United States Patent and Trademark Office
P.O. Box 1450
Alexandria, VA 22313-1450
www.uspto.gov

MAILED
FROM DIRECTORS OFFICE

SEP 11 2008

TECHNOLOGY CENTER 3600

CANTOR COLBURN LLP
IBM RESEARCH TRIANGLE PARK
20 Church Street
22nd Floor
Hartford CT 06103

In re application of	:	**DECISION ON PETITION**
Brosnan et al.	:	**TO MAKE SPECIAL FOR**
Application No. 12/188,685	:	**NEW APPLICATION**
Filed: August 8, 2008	:	**UNDER 37 CFR 1.102**
For: POINT OF SALE SECURITY SYSTEM		

This is a decision on the petition filed on August 8, 2008 to make the above-identified application special for accelerated examination procedure under 37 C.F.R. § 1.102(d).

The petition to make the application special is **GRANTED**.

The application is eligible for accelerated examination and the petition complies with the conditions for granting the application special status pursuant to the "Change to Practice for Petitions in Patent Applications to Make Special and for Accelerated Examination" published June 26, 2006, in the Federal Register. (71 Fed. Reg. 36323).

The prosecution of the instant application will be conducted expeditiously according to the following guidelines.

1. The application will be docketed to an examiner and taken up for action within two weeks of the date of this decision.

2. Restriction Practice:
If the examiner determines that the claims are not directed to a single invention, a telephone request to elect one single invention will be made pursuant to MPEP 812.01. As a prerequisite to the grant of this petition, the applicant has agreed to make an oral election, by telephone, without traverse. If the applicant refuses to make an election without traverse, or the examiner cannot reach the applicant after a reasonable effort, the examiner will treat the first claimed invention (invention defined by claim 1) as having being constructively elected without traverse for examination.

3. Office action:

If it is determined that, after appropriate consultation, there is a potential rejection or any other issue to be addressed, the examiner will telephone the applicant and arrange an interview to discuss and resolve the issue. An Office action, other than a Notice of Allowance and Fee(s) Due (Notice of Allowance), will not be issued unless either: 1) an interview was conducted but did not result in agreed to action that places the application in condition for allowance, or, 2) a determination is made that an interview would be unlikely to result in the application being placed in condition for allowance, and 3) an internal conference has been held to review any rejection of any claim.

4. Time for Reply:
An Office action other than a Notice of Allowance or a final Office action will set a shortened statutory period of one month or thirty days, whichever is longer, for reply with no extension of time available under 37 CFR 1.136(a). Failure to timely file a reply within this non-extendible period for reply will result in the abandonment of the application.

5. Reply by Applicant:
A timely reply to an Office action other than the Notice of Allowance must be submitted electronically via EFS or EFS-web and limited to addressing the rejections, objections and requirement made. Any amendment that attempts to: 1) add claims which would result in more than three pending independent claims or more than twenty pending total claims; 2) present claims not encompassed by the pre-examination search or an updated accelerated examination support document; or 3) present claims that are directed to a non-elected invention or an invention other than that previously claimed and examined in the application, will be treated as not fully responsive and will not be entered.

   For any amendment to the claims (including any new claim) that is not encompassed by the accelerated examination support document, applicant must provide an updated accelerated examination support document that encompasses the amended or new claims at the time of filing of the amendment.

   To proceed expeditiously with the examination, it is recommended that a reply with amendments made to any claim or with any new claim being added be accompanied by an updated accelerated examination support document or a statement explaining how the amended or new claim is supported by the original accelerated examination support document.

6. Information Disclosure Statement (IDS):
Any IDS filed during prosecution must be submitted electronically via EFS or EFS-web, accompanied by an updated accelerated examination support document, and be in compliance with 37 CFR 1.97 and 1.98.

7. Post-Allowance Processing:
   To expedite processing of the allowed application into a patent, the applicant must: 1) pay the required fees within one month of the date of the Notice of Allowance, and 2) not file any post allowance papers not required by the Office. In no event may the issue fee be paid and accepted later than three months from the date of the Notice of Allowance.

8. After-Final and Appeal Procedures:
   To expedite prosecution, after receiving the final Office action, applicant must: 1) promptly file a notice of appeal, an appeal brief and appeal fees; and 2) not request a pre-appeal brief conference.

   Any amendment, affidavit or other evidence filed after final Office action must comply with applicable rules and the requirements outlined in numbered paragraphs 5 and 6 above.

   On appeal, the application will proceed according to normal appeal procedures. After appeal, the application will again be treated special.

9. Proceedings Outside the Normal Examination Process:
   If the application becomes involved in a proceeding that is outside the normal examination process (e.g., a secrecy order, national security review, interference proceeding, petitions under 37 CFR 1.181, 182 or 183), the application will be treated special before and after such proceeding.

10. Final Disposition:
    The twelve month goal of this accelerated examination procedure ends with a final disposition. The mailing of a final Office action, a Notice of Allowance, the filing of a Notice of Appeal, or the filing of a Request for Continued Examination (RCE) is the final disposition.

    If, during prosecution, a paper is not filed electronically using EFS-web, a reply is filed but is not fully responsive, the application is involved in an appeal, or a proceeding outside normal examination process, the application will still be examined expeditiously, however, the final disposition may occur more than twelve months from the filing of the application.

Any inquiry regarding this decision should be directed to Robert Weinhardt, Business Practice Specialist, at (571) 272-6633. Inquires may also be directed to Romain Jeanty at (571) 272-6732.

Robert A. Weinhardt,
Business Practice Specialist
Technology Center 3600

RW/9/7/08

Best Available Copy

UNITED STATES PATENT AND TRADEMARK OFFICE

UNITED STATES DEPARTMENT OF COMMERCE
United States Patent and Trademark Office
Address: COMMISSIONER FOR PATENTS
P.O. Box 1450
Alexandria, Virginia 22313-1450
www.uspto.gov

APPLICATION NO.	FILING DATE	FIRST NAMED INVENTOR	ATTORNEY DOCKET NO.	CONFIRMATION NO.
12/188,702	08/08/2008	Susan W. Brosnan	RPS920070255US3	5514

59369 7590 09/25/2008
CANTOR COLBURN LLP - IBM RESEARCH TRIANGLE PARK
20 Church Street
22nd Floor
Hartford, CT 06103

EXAMINER
THEIN, MARIA TERESA T

ART UNIT	PAPER NUMBER
3627	

NOTIFICATION DATE	DELIVERY MODE
09/25/2008	ELECTRONIC

Please find below and/or attached an Office communication concerning this application or proceeding.

The time period for reply, if any, is set in the attached communication.

Notice of the Office communication was sent electronically on above-indicated "Notification Date" to the following e-mail address(es):

usptopatentmail@cantorcolburn.com

Best Available Copy

UNITED STATES PATENT AND TRADEMARK OFFICE
MAILED
FROM DIRECTORS OFFICE
SEP 24 2008

Commissioner for Patents
United States Patent and Trademark Office
P.O. Box 1450
Alexandria, VA 22313-1450
www.uspto.gov

TECHNOLOGY CENTER 3600

CANTOR COLBURN LLP - IBM RESEARCH TRIANGLE PARK
20 Church Street
22nd Floor
Hartford CT 06103

In re application of	:	**DECISION ON PETITION**
Brosnan et al.	:	**TO MAKE SPECIAL FOR**
Application No. 12/188,702	:	**NEW APPLICATION**
Filed: August 8, 2008	:	**UNDER 37 CFR 1.102**

For: CONFIRMING SECURITY OF PERSONAL ITEMS DURING A POINT OF SALE TRANSACTION

This is a decision on the petition filed on August 8, 2008 to make the above-identified application special for accelerated examination procedure under 37 C.F.R. § 1.102(d).

The petition to make the application special is **GRANTED**.

The application is eligible for accelerated examination and the petition complies with the conditions for granting the application special status pursuant to the "Change to Practice for Petitions in Patent Applications to Make Special and for Accelerated Examination" published June 26, 2006, in the Federal Register. (71 Fed. Reg. 36323).

The prosecution of the instant application will be conducted expeditiously according to the following guidelines.

1. The application will be docketed to an examiner and taken up for action within two weeks of the date of this decision.

2. Restriction Practice:
   If the examiner determines that the claims are not directed to a single invention, a telephone request to elect one single invention will be made pursuant to MPEP 812.01. As a prerequisite to the grant of this petition, the applicant has agreed to make an oral election, by telephone, without traverse. If the applicant refuses to make an election without traverse, or the examiner cannot reach the applicant after a reasonable effort, the examiner will treat the

Best Available Copy

first claimed invention (invention defined by claim 1) as having being constructively elected without traverse for examination.

3. Office action:
   If it is determined that, after appropriate consultation, there is a potential rejection or any other issue to be addressed, the examiner will telephone the applicant and arrange an interview to discuss and resolve the issue. An Office action, other than a Notice of Allowance and Fee(s) Due (Notice of Allowance), will not be issued unless either: 1) an interview was conducted but did not result in agreed to action that places the application in condition for allowance, or, 2) a determination is made that an interview would be unlikely to result in the application being placed in condition for allowance, and 3) an internal conference has been held to review any rejection of any claim.

4. Time for Reply:
   An Office action other than a Notice of Allowance or a final Office action will set a shortened statutory period of one month or thirty days, whichever is longer, for reply with no extension of time available under 37 CFR 1.136(a). Failure to timely file a reply within this non-extendible period for reply will result in the abandonment of the application.

5. Reply by Applicant:
   A timely reply to an Office action other than the Notice of Allowance must be submitted electronically via EFS or EFS-web and limited to addressing the rejections, objections and requirement made. Any amendment that attempts to: 1) add claims which would result in more than three pending independent claims or more than twenty pending total claims; 2) present claims not encompassed by the pre-examination search or an updated accelerated examination support document; or 3) present claims that are directed to a non-elected invention or an invention other than that previously claimed and examined in the application, will be treated as not fully responsive and will not be entered.

   For any amendment to the claims (including any new claim) that is not encompassed by the accelerated examination support document, applicant must provide an updated accelerated examination support document that encompasses the amended or new claims at the time of filing of the amendment.

   To proceed expeditiously with the examination, it is recommended that a reply with amendments made to any claim or with any new claim being added be accompanied by an updated accelerated

Best Available Copy

examination support document or a statement explaining how the amended or new claim is supported by the original accelerated examination support document.

6. Information Disclosure Statement (IDS):
   Any IDS filed during prosecution must be submitted electronically via EFS or EFS-web, accompanied by an updated accelerated examination support document, and be in compliance with 37 CFR 1.97 and 1.98.

7. Post-Allowance Processing:
   To expedite processing of the allowed application into a patent, the applicant must: 1) pay the required fees within one month of the date of the Notice of Allowance, and 2) not file any post allowance papers not required by the Office. In no event may the issue fee be paid and accepted later than three months from the date of the Notice of Allowance.

8. After-Final and Appeal Procedures:
   To expedite prosecution, after receiving the final Office action, applicant must: 1) promptly file a notice of appeal, an appeal brief and appeal fees; and 2) not request a pre-appeal brief conference.

   Any amendment, affidavit or other evidence filed after final Office action must comply with applicable rules and the requirements outlined in numbered paragraphs 5 and 6 above.

   On appeal, the application will proceed according to normal appeal procedures. After appeal, the application will again be treated special.

9. Proceedings Outside the Normal Examination Process:
   If the application becomes involved in a proceeding that is outside the normal examination process (e.g., a secrecy order, national security review, interference proceeding, petitions under 37 CFR 1.181, 182 or 183), the application will be treated special before and after such proceeding.

10. Final Disposition:
    The twelve month goal of this accelerated examination procedure ends with a final disposition. The mailing of a final Office action, a Notice of Allowance, the filing of a Notice of Appeal, or the filing of a Request for Continued Examination (RCE) is the final disposition.

    If, during prosecution, a paper is not filed electronically using EFS-web, a reply is filed but is not fully responsive, the application is

Best Available Copy

involved in an appeal, or a proceeding outside normal examination process, the application will still be examined expeditiously, however, the final disposition may occur more than twelve months from the filing of the application.

Any inquiry regarding this decision should be directed to C. Michelle Tarae at (571) 272-6727, Business Practice Specialist.

C. Michelle Tarae

C. Michelle Tarae
Business Practice Specialist
Technology Center 3600

CMT/9/24/08

UNITED STATES PATENT AND TRADEMARK OFFICE

UNITED STATES DEPARTMENT OF COMMERCE
United States Patent and Trademark Office
Address: COMMISSIONER FOR PATENTS
P.O. Box 1450
Alexandria, Virginia 22313-1450
www.uspto.gov

ARENT FOX LLP
1050 CONNECTICUT AVENUE, N.W.
SUITE 400
WASHINGTON, DC 20036

Mail Date: 04/20/2010

Applicant	: Hisao ASAUMI	: DECISION ON REQUEST FOR
Patent Number	: 7658120	: RECALCULATION of PATENT
Issue Date	: 02/09/2010	: TERM ADJUSTMENT IN VIEW
Appliction No	: 12/188,773	: OF WYETH AND NOTICE OF INTENT TO
Filed	: 08/08/2008	: ISSUE CERTIFICATE OF CORRECTION
		:

The Request for Recalculation is **GRANTED** to the extent indicated.

The patent term adjustment has been determined to be **0** days. The USPTO will *sua sponte* issue a certificate of correction reflecting the amount of PTA days determined by the recalculation.

Prior to the issuance of the certificate of correction, the USPTO will afford patentee an opportunity to be heard and request reconsideration. Accordingly, patentee has **one month or thirty (30) days**, whichever is longer, to file a request for reconsideration of this patent term adjustment calculation. See 35 U.S.C. 154(b)(3)(B)(ii) and 37 CFR 1.322(a)(4). No extensions of time will be granted under 37 CFR 1.136.

Patentee should use document code PET.OP if electronically filing a request for reconsideration of this patent term adjustment calculation. The patentee must also include the information required by 37 CFR 1.705(b)(2) and the fee required by 37 CFR 1.18(e). If patentee does not file a timely request for reconsideration of this patent term adjustment calculation including the information required by 37 CFR 1.705(b)(2) and the fee required by 37 CFR 1.18(e), the USPTO will issue a certificate of correction reflecting the PTA determination noted above.

Patentee should be aware that in order to preserve the right to review in the United States District Court for the District of Columbia of the USPTO patent term adjustment determination, patentee must ensure that he or she also take the steps required under 35 U.S.C. 154(b)(4)(A) in a timely manner. Nothing in the request for recalculation should be construed as providing an alternative time frame for commencing a civil action under 35 U.S.C. 154(b)(4)(A).

Any questions concerning this decision should be directed to the Office of Patent Legal Administration at 571-272-7702.

UNITED STATES PATENT AND TRADEMARK OFFICE

UNITED STATES DEPARTMENT OF COMMERCE
United States Patent and Trademark Office
Address: COMMISSIONER FOR PATENTS
P.O. Box 1450
Alexandria, Virginia 22313-1450
www.uspto.gov

APPLICATION NO.	FILING DATE	FIRST NAMED INVENTOR	ATTORNEY DOCKET NO.	CONFIRMATION NO.
12/188,777	08/08/2008	Takako Suzuki	006639P434	5645

7590 09/23/2009
BLAKELY SOKOLOFF TAYLOR & ZAFMAN LLP
1279 OAKMEAD PARKWAY
SUNNYVALE, CA 94085-4040

EXAMINER
MAMO, ELIAS

ART UNIT	PAPER NUMBER
2184	

MAIL DATE	DELIVERY MODE
09/23/2009	PAPER

DECISION GRANTING PETITION UNDER 37 CFR 1.138(d)

The declaration of express abandonment is recognized

This is in response to the petition under 37 CFR 1.138(d), requesting for a refund of any previously paid search fee and excess claims fee in the above-identified application.

The petition is granted.

The express abandonment is recognized. Any previously paid search fee and excess claims fee are hereby refunded.

Telephone inquiries should be directed to the Office of Data Management at (571) 272-4200.

Kalethis Buchanan

Patent Publication Branch
Office of Data Management

Adjustment date: 09/23/2009 KKING1
08/11/2008 INTEFSW 00001885 022666 12188777
02 FC:1111 510.00 CR

FORM PET651G (Rev. 08/07)

UNITED STATES PATENT AND TRADEMARK OFFICE

UNITED STATES DEPARTMENT OF COMMERCE
United States Patent and Trademark Office
Address: COMMISSIONER FOR PATENTS
P.O. Box 1450
Alexandria, Virginia 22313-1450
www.uspto.gov

APPLICATION NO.	FILING DATE	FIRST NAMED INVENTOR	ATTORNEY DOCKET NO.	CONFIRMATION NO.
12/188,777	08/08/2008	Takako Suzuki	006639P434	5645

7590 09/23/2009
BLAKELY SOKOLOFF TAYLOR & ZAFMAN LLP
1279 OAKMEAD PARKWAY
SUNNYVALE, CA 94085-4040

EXAMINER
MAMO, ELIAS

ART UNIT	PAPER NUMBER
2184	

MAIL DATE	DELIVERY MODE
09/23/2009	PAPER

DECISION DISMISSING PETITION UNDER 37 CFR 1.138(c)

The declaration of express abandonment will not be recognized

This is in response to the petition under 37 CFR 1.138(c), for express abandonment to avoid publication of the above-identified application.

The petition is dismissed.

The express abandonment will **not** be recognized for the reason(s) indicated below:

1. ☐ The petition under 37 CFR 1.138(c) was not filed in sufficient time to permit the appropriate officials to recognize the abandonment and remove the application from the publication process.
2. ☐ The petition was not signed by a party authorized by 37 CFR 1.33(b)(1), (3) or (4).
3. ☑ The Application was published in compliance with 35 U.S.C. 122(b), and it is available on the USPTO web site at http://www.uspto.gov/patft/index.html.
4. ☐ Petition fee was not paid.

The application **has/will be published** as scheduled.

Telephone inquiries should be directed to the Office of Data Management at (571) 272-4200.

Kalitus Buchanan

Patent Publication Branch
Office of Data Management

FORM PET650D (Rev. 08/07)

UNITED STATES PATENT AND TRADEMARK OFFICE

Commissioner for Patents
United States Patent and Trademark Office
P.O. Box 1450
Alexandria, VA 22313-1450
www.uspto.gov

HOUSTON IP DEPARTMENT
JACKSON WALKER L.L.P.
1401 MCKINNEY ST., SUITE 1900
HOUSTON TX 77010

COPY MAILED
MAR 01 2010

In re Application of	:	
Kaytaro George SUGAHARA	:	
Application No. 12/188,780	:	DECISION ON PETITION
Filed: August 8, 2008	:	TO WITHDRAW
Attorney Docket No. 133546.0001.000	:	FROM RECORD
	:	

This is a decision on the Request to Withdraw as attorney or agent under 37 C.F.R. § 1.36(b) filed December 17, 2009.

The request is **NOT APPROVED**.

The Office will no longer approve requests from practitioners to withdraw from applications where the requesting practitioner is acting, or has acted, in a representative capacity pursuant to 37 CFR 1.34. In these situations, the practitioner is responsible for the correspondence the practitioner files in the application while acting in a representative capacity. As such, there is no need for the practitioner to obtain the Office's permission to withdraw from representation. However, practitioners acting in a representative capacity, like practitioners who have a power of attorney in the application, remain responsible for noncompliance with 37 CFR 1.56, as well as 37 CFR 10.18, with respect to documents they file.

A review of the file record indicates that Daniel Chapman does not have power of attorney in this patent application. See 37 C.F.R. § 10.40. Accordingly, the request to withdraw under 37 C.F.R. § 1.36(b) is not applicable.

All future communications from the Office will continue to be directed to the above-identified address until otherwise properly notified.

Telephone inquires concerning this decision should be directed to the undersigned at 571-272-6735.

/Diane C. Goodwyn/
Diane C. Goodwyn
Petitions Examiner
Office of Petitions

cc: DANIEL CHAPMAN
112 E. PECAN STREET,
SUITE 2400
SAN ANTONIO TX 78205

UNITED STATES PATENT AND TRADEMARK OFFICE

Commissioner for Patents
United States Patent and Trademark Office
P.O. Box 1450
Alexandria, VA 22313-1450
www.uspto.gov

MAILED

MAR 25 2010

OFFICE OF PETITIONS

HOUSTON IP DEPARTMENT
JACKSON WALKER L.L.P.
1401 MCKINNEY ST., SUITE 1900
HOUSTON TX 77010

In re Application of	:	
Kaytaro George SUGAHARA	:	
Application No. 12/188,780	:	DECISION ON PETITION
Filed: August 8, 2008	:	TO WITHDRAW
Attorney Docket No. 133546.0001.000	:	FROM RECORD
	:	

This is a decision on the Request to Withdraw as attorney or agent under 37 C.F.R. § 1.36(b) filed March 5, 2010.

The request is **NOT APPROVED**.

The Office will no longer approve requests from practitioners to withdraw from applications where the requesting practitioner is acting, or has acted, in a representative capacity pursuant to 37 CFR 1.34. In these situations, the practitioner is responsible for the correspondence the practitioner files in the application while acting in a representative capacity. As such, there is no need for the practitioner to obtain the Office's permission to withdraw from representation. However, practitioners acting in a representative capacity, like practitioners who have a power of attorney in the application, remain responsible for noncompliance with 37 CFR 1.56, as well as 37 CFR 10.18, with respect to documents they file.

A review of the file record indicates that Michael G. Locklar does not have power of attorney in this patent application. See 37 C.F.R. § 10.40. Accordingly, the request to withdraw under 37 C.F.R. § 1.36(b) is not applicable.

All future communications from the Office will continue to be directed to the above-identified address until otherwise properly notified.

Telephone inquires concerning this decision should be directed to the undersigned at 571-272-6735.

/Diane Goodwyn/
Diane Goodwyn
Petitions Examiner
Office of Petitions

cc: MICHAEL G. LOCKLAR
1400 MCKINNEY STREET,
SUITE 1900
HOUSTON, TX 77010

UNITED STATES PATENT AND TRADEMARK OFFICE

Commissioner for Patents
United States Patent and Trademark Office
P.O. Box 1450
Alexandria, VA 22313-1450
www.uspto.gov

GLENN PATENT GROUP
34754 EDISON WAY, SUITE L
MENLO PARK, CA 94025

COPY MAILED

AUG 06 2009

OFFICE OF PETITIONS

In re Application of	:	
Scott Brave et al.	:	
Application No. 12/188,850	:	DECISION ON PETITION
Filed: August 8, 2008	:	TO WITHDRAW
Attorney Docket No. **15921-4009**	:	FROM RECORD
	:	

This is a decision on the Request to Withdraw as attorney or agent of record under 37 CFR. § 1.36(b), filed June 29, 2009.

The request is **NOT APPROVED** as moot.

A review of the file record indicates that the power of attorney to attorneys/agents associated with the above application has been revoked by the assignee of the patent application on July 2, 2009. Accordingly, the request to withdraw under 37 CFR § 1.36(b) is moot.

All future communications from the Office will continue to be directed to the below-listed address until otherwise notified by applicant.

Telephone inquires concerning this decision should be directed to JoAnne Burke at 571-272-4584.

JoAnne Burke
Petitions Examiner
Office of Petitions

cc: ORRICK, HERRINGTON & SUTCLIFFE, LLP
IP PROSECUTION DEPARTMENT
4 PARK PLAZA
SUITE 1600
IRVINE CA 92614-2558

UNITED STATES PATENT AND TRADEMARK OFFICE

Commissioner for Patents
United States Patent and Trademark Office
P.O. Box 1450
Alexandria, VA 22313-1450
www.uspto.gov

KEAN, MILLER, HAWTHORNE, D'ARMOND,
MCCOWAN & JARMAN, LLP
ONE AMERICAN PLACE, 22ND FLOOR
P.O. BOX 3513
BATON ROUGE, LA 70821

MAILED

JAN 30 2009

OFFICE OF PETITIONS

In re Application of	:	
Stanley R. Pearson	:	
Application No. 12/188,856	:	DECISION ON PETITION
Filed: August 8, 2008	:	TO WITHDRAW
Attorney Docket No. 19635-6	:	FROM RECORD
	:	

This is a decision on the Request to Withdraw as attorney or agent under 37 C.F.R. § 1.36(b) or 37 C.F.R. § 10.40 filed November 6, 2008.

The request is **APPROVED**.

A review of the file record indicates that Kean, Miller Hawthorne, D'armond, McCowan & Jarman, LLP: (1) does not have power of attorney in this patent application; and (2) has been employed or otherwise engaged in the proceedings in this patent application. In view of the present decision, Kean, Miller Hawthorne, D'armond, McCowan & Jarman, LLP has been withdrawn from the present application and may not prepare or submit papers under 37 C.F.R. § 1.34, or correspond in any manner in this application unless appointed in an acceptable power of attorney under 37 C.F.R. § 1.32(b).

The request to change the correspondence of record is not acceptable as the requested correspondence address is not that of: (1) the first named signing inventor; or (2) the intervening assignee of the entire interest. All future communications from the Office will be directed to the first named signing inventor at the first copied address below until otherwise properly notified by the applicant.

In order to request or take action in a patent matter, the assignee must establish its ownership of the patent to the satisfaction of the Director. In this regard, a Statement under 37 CFR 3.73(b) must have either: (i) documentary evidence of a chain of title from the original owner to the assignee (e.g., copy of an executed assignment), and a statement affirming that the documentary evidence of the chain of title from the original owner to the assignee was or concurrently is being submitted for recordation pursuant to § 3.11; or (ii) a statement specifying where documentary evidence of a chain of title from the original owner to the assignee is recorded in the assignment records of the Office (e.g., reel and frame number).

Applicant is reminded that there is no attorney of record at this time.

There are no pending Office actions at the present time.

Telephone inquires concerning this decision should be directed to undersigned at 571-272-1642.

/AMW/
April M. Wise
Petitions Examiner
Office of Petitions

cc: STANLEY R. PEARSON
544 SOUTH LAKEVIEW DRIVE
BATON ROUGE, LA 70810

cc: INTERNATIONAL FINANCIAL SERVICES #1, LLC
6717 PERKINS ROAD
BATON ROUGE, LA 70808

UNITED STATES PATENT AND TRADEMARK OFFICE

Commissioner for Patents
United States Patent and Trademark Office
P.O. Box 1450
Alexandria, VA 22313-1450
www.uspto.gov

LAW OFFICE OF DAVID H. JUDSON
15950 DALLAS PARKWAY
SUITE 225
DALLAS TX 75248

MAILED

AUG 17 2009

OFFICE OF PETITIONS

In re Application of :
William H. DAVIS et al. :
Application No. 12/188,857 : ON PETITION
Filed: August 8, 2008 :
Attorney Docket No. ZE-GEN 008 :

This is a decision on the petition under 37 CFR 1.137(b), filed June 22, 2009, to revive the above-identified application.

The petition is **GRANTED**.

The above-identified application became abandoned for failure to file a proper reply in a timely manner to the Notice to File Missing Parts of Nonprovisional Application mailed August 27, 2008, which set a shortened statutory period for reply of two (2) months. No extensions of time under the provisions of 37 CFR 1.136(a) were obtained. Accordingly, the above-identified application became abandoned on October 28, 2008.

The petition satisfies the conditions for revival pursuant to the provisions of 37 CFR 1.137(b) in that (1) the reply in the form of the required fees, Drawings and Oath or Declaration; (2) the petition fee of $810.00; and (3) the required statement of unintentional delay have been received. Accordingly, the reply to the Notice to File Missing Parts of Nonprovisional Application of August 27, 2008 is accepted as having been unintentionally delayed.

Telephone inquiries concerning this decision should be directed to Niketa I. Patel at 571-272-4156 or in her absence, the undersigned at 571-272-7099.

The application is being referred to the Office of Initial Patent Examination.

David Bucci
Petitions Examiner
Office of Petitions

UNITED STATES PATENT AND TRADEMARK OFFICE

UNITED STATES DEPARTMENT OF COMMERCE
United States Patent and Trademark Office
Address: COMMISSIONER FOR PATENTS
P.O. Box 1450
Alexandria, Virginia 22313-1450
www.uspto.gov

APPLICATION NO.	FILING DATE	FIRST NAMED INVENTOR	ATTORNEY DOCKET NO.	CONFIRMATION NO.
12/188,865	08/08/2008	Valentina Birsan	CA920080031US1 (3050)	5824

78290 7590 03/19/2009
Oppenheimer Wolff & Donnelly LLP
Plaza VII, Suite 3300
45 South Seventh Street
Minneapolis, MN 55402-1609

EXAMINER
LO, WEILUN

ART UNIT	PAPER NUMBER
2179	

MAIL DATE	DELIVERY MODE
03/19/2009	PAPER

Please find below and/or attached an Office communication concerning this application or proceeding.

The time period for reply, if any, is set in the attached communication.

UNITED STATES PATENT AND TRADEMARK OFFICE

Commissioner for Patents
United States Patent and Trademark Office
P.O. Box 1450
Alexandria, VA 22313-1450
www.uspto.gov

Oppenheimer Wolff & Donnelly LLP
Plaza VII, Suite 3300
45 South Seventh Street
Minneapolis MN 55402-1609

In re Application of:
BIRSAN, VALENTINA et al.
Serial No.: 12/188,865
Filed: August 8, 2008
Docket: CA920080031US1 (3050)
Title: EXTENDABLE AND PLUGGABLE METHOD FOR VALIDATING XML DATA

DECISION ON PETITION TO MAKE SPECIAL FOR NEW APPLICATION UNDER 37 C.F.R. § 1.102 & M.P.E.P. § 708.02

This is a decision on the petition filed on August 8, 2008 to make the above-identified application special for accelerated examination procedure under 37 C.F.R. § 1.102(d).

The petition to make the application special is GRANTED.

The application is eligible for accelerated examination and the petition complies with the conditions for granting the application special status pursuant to the "Change to Practice for Petitions in Patent Applications to Make Special and for Accelerated Examination" published June 26, 2006, in the Federal Register. (71 Fed. Reg. 36323).

The prosecution of the instant application will be conducted expeditiously according to the following guidelines.

1. The application will be docketed to an examiner and taken up for action within two weeks of the date of this decision.

2. Restriction Practice:
   If the examiner determines that the claims are not directed to a single invention, a telephone request to elect one single invention will be made pursuant to MPEP 812.01. As a prerequisite to the grant of this petition, the applicant has agreed to make an oral election, by telephone, without traverse. If the applicant refuses to make an election without traverse, or the examiner cannot reach the applicant after a reasonable effort, the examiner will treat the first claimed invention (invention defined by claim 1) as having being constructively elected without traverse for examination.

3. Office action:
   If it is determined that, after appropriate consultation, there is a potential rejection or any other issue to be addressed, the examiner will telephone the applicant and arrange an interview to discuss and resolve the issue. An Office action, other than a Notice of Allowance and Fee(s) Due (Notice of Allowance), will not be issued unless either: 1) an interview was conducted but did not result in agreed to action that places the application in condition for allowance, or, 2) a determination is made that an interview would be unlikely to result in the application being placed in condition for allowance, and 3) an internal conference has been held to review any rejection of any claim.

4. Time for Reply:
   An Office action other than a Notice of Allowance or a final Office action will set a shortened statutory period of one month or thirty days, whichever is longer, for reply with no extension of time available under 37 CFR 1.136(a). Failure to timely file a reply within this non-extendible period for reply will result in the abandonment of the application.

5. Reply by Applicant:
   A timely reply to an Office action other than the Notice of Allowance must be submitted electronically via EFS or EFS-web and limited to addressing the rejections, objections and requirement made. Any amendment that attempts to: 1) add claims which would result in more than three pending independent claims or more than twenty pending total claims; 2) present claims not encompassed by the pre-examination search or an updated accelerated examination support document; or 3) present claims that are directed a non-elected invention or an invention other than that previously claimed and examined in the application, will be treated as not fully responsive and will not be entered.

   For any amendment to the claims (including any new claim) that is not encompassed by the accelerated examination support document, applicant must provide an updated accelerated examination support document that encompasses the amended or new claims at the time of filing of the amendment.

   To proceed expeditiously with the examination, it is recommended that a reply with amendments made to any claim or with any new claim being added be accompanied by an updated accelerated examination support document or a statement explaining how the amended or new claim is supported by the original accelerated examination support document.

6. Information Disclosure Statement (IDS):
   Any IDS filed during prosecution must be submitted electronically via EFS or EFS-web, accompanied by an updated accelerated examination support document, and be in compliance with 37 CFR 1.97 and 1.98.

7. Post-Allowance Processing:
   To expedite processing of the allowed application into a patent, the applicant must: 1) pay the required fees within one month of the date of the Notice of Allowance, and 2) not file any post allowance papers not required by the Office. In no event may the issue fee be paid and accepted later than three months from the date of the Notice of Allowance.

8. After-Final and Appeal Procedures:
   To expedite prosecution, after receiving the final Office action, applicant must: 1) promptly file a notice of appeal, an appeal brief and appeal fees; and 2) not request a pre-appeal brief conference.

   Any amendment, affidavit or other evidence filed after final Office action must comply with applicable rules and the requirements outlined in numbered paragraphs 5 and 6 above.

   On appeal, the application will proceed according to normal appeal procedures. After appeal, the application will again be treated special.

9. Proceedings Outside the Normal Examination Process:
   If the application becomes involved in a proceeding that is outside the normal examination process (e.g., a secrecy order, national security review, interference proceeding, petitions under 37 CFR 1.181, 182 or 183), the application will be treated special before and after such proceeding.

10. Final Disposition:
    The twelve month goal of this accelerated examination procedure ends with a final disposition. The mailing of a final Office action, a Notice of Allowance, the filing of a Notice of Appeal, or the filing of a Request for Continued Examination (RCE) is the final disposition.

If, during prosecution, a paper is not filed electronically using EFS-web, a reply is filed but is not fully responsive, the application is involved in an appeal, or a proceeding outside normal examination process, the application will still be examined expeditiously, however, the final disposition may occur more than twelve months from the filing of the application.

Any inquiry regarding this decision should be directed to the undersigned at (571) 272-3719.

/Kakali Chaki/

Kakali Chaki, Quality Assurance Specialist
Technology Center 2100

UNITED STATES PATENT AND TRADEMARK OFFICE

Commissioner for Patents
United States Patent and Trademark Office
P.O. Box 1450
Alexandria, VA 22313-1450
www.uspto.gov

KEAN, MILLER, HAWTHORNE, D'ARMOND,
MCCOWAN & JARMAN, L.L.P.
ONE AMERICAN PLACE, 22ND FLOOR
P.O. BOX 3513
BATON ROUGE, LA 70821

COPY MAILED

MAR 1 6 2009

OFFICE OF PETITIONS

In re Application of

Stanley R. **PEARSON**
Application No. 12/188,872
Filed: August 8, 2008
Attorney Docket No. **19635-4**

DECISION ON PETITION TO WITHDRAW FROM RECORD UNDER 37 CFR 1.36(b)

This is a decision on the Request to Withdraw as attorney or agent of record under 37 C.F.R. § 1.36(b), filed November 6, 2008.

The request is **APPROVED**.

A grantable request to withdraw as attorney/agent of record must be signed by every attorney/agent seeking to withdraw or contain a clear indication that one attorney is signing on behalf of another/others. A request to withdraw will not be approved unless at least 30 (thirty) days would remain between the date of approval and the later of the expiration date of a time to file a response or the expiration date of the maximum time period which can be extended under 37 C.F.R. § 1.136(a).

The request was signed by Henry Naylor on behalf of all attorneys of record. All attorneys/agents associated have been withdrawn. Applicant is reminded that there is no attorney of record at this time.

All future communications from the Office will be directed to the assignee of the entire interest at the address below until otherwise properly notified by the applicant.

Telephone inquiries concerning this decision should be directed to the undersigned at 571-272-7253.

/Monica A. Graves/
Petitions Examiner, Office of Petitions

cc: **INTERNATIONAL FINANCIAL SERVICES #1, LLC**
6717 PERKINS ROAD
BATON ROUGE, LA 70808

UNITED STATES PATENT AND TRADEMARK OFFICE

UNITED STATES DEPARTMENT OF COMMERCE
United States Patent and Trademark Office
Address: COMMISSIONER FOR PATENTS
P.O. Box 1450
Alexandria, Virginia 22313-1450
www.uspto.gov

APPLICATION NO.	FILING DATE	FIRST NAMED INVENTOR	ATTORNEY DOCKET NO.	CONFIRMATION NO.
12/188,888	08/08/2008	Hiroyuki Tsuji	6639P433	5863

8791 7590 09/25/2009
BLAKELY SOKOLOFF TAYLOR & ZAFMAN LLP
1279 OAKMEAD PARKWAY
SUNNYVALE, CA 94085-4040

EXAMINER
WELLINGTON, ANDREA L

ART UNIT	PAPER NUMBER
2627	

MAIL DATE	DELIVERY MODE
09/25/2009	PAPER

Please find below and/or attached an Office communication concerning this application or proceeding.

The time period for reply, if any, is set in the attached communication.

UNITED STATES PATENT AND TRADEMARK OFFICE

Commissioner for Patents
United States Patent and Trademark Office
P.O. Box 1450
Alexandria, VA 22313-1450
www.uspto.gov

BLAKELY SOKOLOFF TAYLOR & ZAFMAN LLP
1279 OAKMEAD PARKWAY
SUNNYVALE CA 94085-4040

In re Application of	:	
TSUJI, HIROYUKI	:	DECISION ON REQUEST TO
Application No. 12/188,888	:	PARTICIPATE IN PATENT
Filed: August 8, 2008	:	PROSECUTION HIGHWAY
Attorney Docket No. 6639P433	:	PROGRAM AND PETITION
	:	TO MAKE SPECIAL UNDER
	:	37 CFR 1.102(d)

This is a decision on the request to participate in the Patent Prosecution Highway (PPH) program and the petition under 37 CFR 1.102(d), filed July 1, 2009 to make the above-identified application special.

The request and petition are **GRANTED**.

A grantable request to participate in the PPH program and petition to make special require:

(1) The U.S. application must validly claim priority under 35 U.S.C. 119(a) to one or more applications filed in the JPO;
(2) Applicant must submit a copy of the allowable/patentable claim(s) from the JPO application(s) along with an English translation thereof and a statement that the English translation is accurate;
(3) All the claims in the U.S. application must sufficiently correspond or be amended to sufficiently correspond to the allowable/patentable claim(s) in the JPO application(s);
(4) Examination of the U.S. application has not begun;
(5) Applicant must submit a copy of all the office actions from each of the JPO application(s) containing the allowable/patentable claim(s) along with an English translation thereof and a statement that the English translation is accurate;
(6) Applicant must submit an IDS listing the documents cited by the JPO examiner in the JPO office action along with copies of documents except U.S. patents or U.S. patent application publications; and
(7) The required petition fee under 37 CFR 1.17(h).

The request to participate in the PPH program and petition comply with the above requirements. Accordingly, the above-identified application has been accorded "special" status.

Telephone inquiries concerning this decision should be directed to Doris To at 571-272-7629.

All other inquiries concerning the examination or status of the application should be directed to Patent Application Information Retrieval (PAIR) system.

The application is being forwarded to the examiner for action on the merits commensurate with this decision.

/Doris To/

Doris To
Quality Assurance Specialist
Technology Center 2600
Communications

UNITED STATES PATENT AND TRADEMARK OFFICE

Commissioner for Patents
United States Patent and Trademark Office
P.O. Box 1450
Alexandria, VA 22313-1450
www.uspto.gov

DUNLAP CODDING, P.C.
PO BOX 16370
OKLAHOMA CITY, OK 73113

COPY MAILED
SEP 25 2008

In re Application of	:	
Marlene MEE	:	
Application No. 12/188,891	:	DECISION ON PETITION
Filed: August 8, 2008	:	TO MAKE SPECIAL UNDER
Attorney Docket No. 4975.010	:	37 CFR 1.102(c)(1)
	:	

This is a decision on the petition under 37 CFR 1.102(c)(1), filed August 8, 2008, to make the above-identified application special based on applicant's age as set forth in M.P.E.P. § 708.02, Section IV.

The petition is **GRANTED**.

A grantable petition to make an application special under 37 CFR 1.102(c)(1) and MPEP § 708.02, Section IV: Applicant's Age must be accompanied by evidence showing that at least one of the applicants is 65 years of age, or more, such as a birth certificate or a statement by applicant. No fee is required

The instant petition includes a declaration statement by applicant. Accordingly, the above-identified application has been accorded "special" status.

Telephone inquiries concerning this decision should be directed to the undersigned at 571-272-6735.

This application is being referred back to the Office of Patent Application Processing for processing. This application will be accorded "special" status when pre-examination processing is done.

Diane Goodwyn
Petitions Examiner
Office of Petitions

UNITED STATES PATENT AND TRADEMARK OFFICE

Commissioner for Patents
United States Patent and Trademark Office
P.O. Box 1450
Alexandria, VA 22313-1450
www.uspto.gov

Heller Ehrman, LLP
4350 La Jolla Village Drive #700
7th Floor
San Diego, CA 92122

COPY MAILED

NOV 1 2 2008

OFFICE OF PETITIONS

In re Application of	:	
David Fowler	:	
Application No. 12/188,903	:	DECISION ON PETITION
Filed: August 8, 2008	:	TO WITHDRAW
Attorney Docket No. 43918-0006.US	:	FROM RECORD
	:	

This is a decision on the Request to Withdraw as attorney or agent under 37 C.F.R. § 1.36(b) or 37 C.F.R. § 10.40 filed October 22, 2008.

The request is **APPROVED**.

A grantable request to withdraw as attorney/agent of record must be signed by every attorney/agent seeking to withdraw or contain a clear indication that one attorney is signing on behalf of another/others. A request to withdraw will not be approved unless at least 30 (thirty) days would remain between the date of approval and the later of the expiration date of a time to file a response or the expiration date of the maximum time period which can be extended under 37 C.F.R. § 1.136(a).

The request was signed by Richard W. Thill on behalf of all attorneys/agents of record. All attorneys/agents of record have been withdrawn.

Applicant is reminded that there is no attorney of record at this time.

The request to change the correspondence of record is not acceptable as the requested correspondence address is not that of (1) the first named signing inventor; or (2) an intervening assignee of the entire interest under 37 C.F.R. 3.71. Accordingly, all correspondence will be mailed to the first named inventor, since no assignee has properly intervened in this application. A courtesy copy of this decision will be mailed to the address noted on the request. If the assignee or an attorney on behalf of the assignee desires to receive future correspondence regarding this application, the proper power of attorney documents and a proper statement under 37 CFR 3.73(b) must be submitted.

Telephone inquiries concerning this decision should be directed to Kimberly Inabinet at 571-272-4618.

Kimberly Inabinet
Petitions Examiner
Office of Petitions

cc: David Fowler
Flat 3, 36 Prince of Wales Road
Dorcheser, Dorset DT1 1PW
United Kingdom

cc: Better Energy Systems, Ltd.
1508-1510 Sixth Street
Berkeley, CA 97410

UNITED STATES PATENT AND TRADEMARK OFFICE

UNITED STATES DEPARTMENT OF COMMERCE
United States Patent and Trademark Office
Address: COMMISSIONER FOR PATENTS
P.O. Box 1450
Alexandria, Virginia 22313-1450
www.uspto.gov

APPLICATION NUMBER	FILING OR 371(C) DATE	FIRST NAMED APPLICANT	ATTY. DOCKET NO./TITLE
12/188,903	08/08/2008	David Fowler	43918-0006.US

CONFIRMATION NO. 5895

POWER OF ATTORNEY NOTICE

33123
HELLER EHRMAN LLP
4350 LA JOLLA VILLAGE DRIVE #700
7TH FLOOR
SAN DIEGO, CA 92122

OC000000033054053

Date Mailed: 11/12/2008

NOTICE REGARDING CHANGE OF POWER OF ATTORNEY

This is in response to the Power of Attorney filed 10/22/2008.

- The withdrawal as attorney in this application has been accepted. Future correspondence will be mailed to the new address of record. 37 CFR 1.33.

/kainabinet/

Office of Data Management, Application Assistance Unit (571) 272-4000, or (571) 272-4200, or 1-888-786-0101

UNITED STATES PATENT AND TRADEMARK OFFICE

Commissioner for Patents
United States Patent and Trademark Office
P.O. Box 1450
Alexandria, VA 22313-1450
www.uspto.gov

MINTZ, LEVIN, COHN, FERRIS, GLOVSKY AND POPEO, P.C.
ONE FINANCIAL CENTER
BOSTON MA 02111

COPY MAILED
MAR 01 2010

In re Application of	:	
Behzad PIRVALI, et al	:	
Application No. 12/188,915	:	DECISION ON PETITION
Filed: August 8, 2008	:	TO WITHDRAW
Attorney Docket No. 35619-502F01US	:	FROM RECORD
	:	

This is a decision on the Request to Withdraw as attorney or agent of record under 37 C.F.R. § 1.36(b), filed December 17, 2009.

The request is **NOT APPROVED.**

The Office will no longer accept address changes to a new practitioner or law firm filed with a Request, absent the filing of a power of attorney to the new representative. The Office will either change the correspondence address of record to the most current address information provided for the assignee of the entire interest who properly became of record under 37 CFR 3.71 or, if no assignee of the entire interest has properly been made of record under 37 CFR 3.71, the most current address information provided for the first named inventor.

Accordingly, the request to withdraw from record cannot be approved because the request to change the correspondence address does not include a proper power of attorney nor is the address that of: (1) the first named inventor; or (2) an assignee of the entire interest under 37 C.F.R 3.71.

All future communications from the Office will continue to be directed to the above-identified address until otherwise properly notified.

Telephone inquiries concerning this decision should be directed to the undersigned at 571-272-6735.

/DCG/
Diane C. Goodwyn
Petitions Examiner
Office of Petitions

UNITED STATES PATENT AND TRADEMARK OFFICE

Commissioner for Patents
United States Patent and Trademark Office
P.O. Box 1450
Alexandria, VA 22313-1450
www.uspto.gov

KNOBBE MARTENS OLSON & BEAR LLP
2040 MAIN STREET
FOURTEENTH FLOOR
IRVINE CA 92614

COPY MAILED

JAN 16 2009

OFFICE OF PETITIONS

In re Application of
Le, Tran, Flores, and Mac
Application No. 12/188,964
Filed: August 8, 2008
Attorney Docket No. MICA.092A
For: ADJUSTABLE ANNULOPLASTY RING AND ACTIVATION SYSTEM

: DECISION REFUSING STATUS
: UNDER 37 CFR 1.47(a)

This is a decision on the petition under 37 CFR 1.47(a) filed December 19, 2008.

The petition under 37 CFR 1.47(a) is **dismissed.**

Any request for reconsideration under this decision must be submitted within TWO (2) MONTHS from the mail date of this decision. Extensions of time under 37 CFR 1.136(a) are permitted. Failure to respond will result in the abandonment of this application. Any response should be titled "Request for Reconsideration of Petition Under 37 CFR 1.47(a).

The above-identified application was filed on August 8, 2008, and was not accompanied by a properly executed oath or declaration. A Notice to File Missing Parts of Nonprovisional Application was mailed on August 26, 2008, requiring a proper oath or declaration and allowing an extendable period for reply of two months from its mailing date. The instant petition was filed on December 19, 2008, with a request for an extension of time within the second month.

A grantable petition under 37 CFR 1.47(a) requires:

(1) proof that the non-signing inventor(s) cannot be reached or refuses to sign the oath or declaration after having been presented with the application papers (specification, claims, and drawings);

(2) an acceptable oath or declaration in compliance with 35 U.S.C. §§ 115 and 116;

(3) the petition fee,

(4) a statement of the last known address of the non-signing inventor,

The instant petition lacks item (1) as set forth above.

As to item (1), the instant petition does not provide sufficient evidence that a complete copy of the application papers was sent, or presented, to the non-signing inventor. Further to this point, Section 409.03(d) of the *Manual of Patent Examining Procedure* (MPEP) provides, in pertinent part, that:

> [a] refusal by an inventor to sign an oath or declaration when the inventor has not been presented with the application papers does not itself suggest that the inventor is refusing to join the application unless it is clear that the inventor understands exactly what he or she is being asked to sign and refuses to accept the application papers. A copy of the application paper should be sent to the last known address of the non-signing inventor . . .
>
> Where a refusal of the inventor to sign the application papers is alleged, the circumstances of the presentation of the application papers and of the refusal must be specified in a statement of facts by the person who presented the inventor with the application papers and/or to whom the refusal was made. Statements by a party not present when an oral refusal is made will not be accepted.
>
> Proof that a *bona fide* attempt was made to present a copy of the application papers (specification, including claims, drawings, and oath or declaration) to the nonsigning inventor for signature, but the inventor refused to accept delivery of the papers or expressly stated that the application papers should not be sent, may be sufficient. When there is an express oral refusal, that fact along with the time and place of the refusal must be stated in the statement of facts. When there is an express written refusal, a copy of the document evidencing that refusal must be made part of the statement of facts. The document may be redacted to remove material not related to the inventor's reasons for refusal.
>
> When it is concluded by the 37 CFR 1.47 applicant that a nonsigning inventor's conduct constitutes a refusal, all facts upon which that conclusion is based should be stated in the statement of facts in support of the petition or directly in the petition. If there is documentary evidence to support facts alleged in the petition or in any statement of facts, such evidence should be submitted. Whenever a nonsigning inventor gives a reason for refusing to sign the application oath or declaration, that reason should be stated in the petition.

While the instant petition states that inventor Le has refused to join the prosecution of the application, it is not clear whether inventor Le was provided a complete copy of the application papers or whether he refused to accept the same. In order for a refusal to have merit, petitioner must demonstrate that a complete copy of the application, including specification, claims, drawings abstract, and declaration, was presented to the inventor. The renewed petition must clarify this point.

Additionally, petitioner must provide a statement from Ms. Baker—the person to whom the refusal was allegedly made—explaining the circumstances surrounding the presentation of the application papers and Mr. Le's refusal of the same.

As to item (3), the fee for the instant petition is $200.00. Deposit account 11-1410 will be charge $200.00 for the same.

Further correspondence with respect to this matter should be addressed as follows:

By mail: Mail Stop Petitions
Commissioner for Patents,
PO Box 1450
Alexandria, VA 22313-1450

By FAX: (571) 273-8300
Attn: Office of Petitions

Telephone inquiries concerning this decision should be directed to the undersigned (571) 272-3222.

Kenya A. McLaughlin
Petitions Attorney
Office of Petitions

UNITED STATES PATENT AND TRADEMARK OFFICE

Commissioner for Patents
United States Patent and Trademark Office
P.O. Box 1450
Alexandria, VA 22313-1450
www.uspto.gov

KNOBBE MARTENS OLSON & BEAR LLP
2040 MAIN STREET
FOURTEENTH FLOOR
IRVINE CA 92614

COPY MAILED

MAY 08 2009

OFFICE OF PETITIONS

In re Application of
Le, Tran, Flores, and Mac
Application No. 12/188,964
Filed: August 8, 2008
Attorney Docket No. MICA.092A
For: ADJUSTABLE ANNULOPLASTY RING AND ACTIVATION SYSTEM

: DECISION ACCORDING STATUS
: UNDER 37 CFR 1.47(a)

This is in response to the renewed petition under 37 CFR 1.47(a), filed April 16, 2009.

The petition is **GRANTED**.

The above-identified application and papers have been reviewed and found in compliance with 37 CFR 1.47(a). This application is hereby accorded Rule 1.47(a) status.

The above-identified application was filed on August 8, 2008, and was not accompanied by a properly executed oath or declaration. A Notice to File Missing Parts of Nonprovisional Application was mailed on August 26, 2008, requiring a proper oath or declaration and allowing an extendable period for reply of two months from its mailing date. A petition under 37 CFR 1.47(a) was filed on December 19, 2008, with a request for an extension of time within the second month. The petition was dismissed by a decision mailed January 16, 2009.

Petitioner has shown that inventor Le has refused to join the prosecution of the application. The above-identified application and papers have been reviewed and found in compliance with 37 CFR 1.47(a). This application is hereby accorded Rule 1.47(a) status.

As provided in Rule 1.47(c), this Office will forward notice of this application's filing to the non-signing inventor at the addresses given in the petition. Notice of the filing of this application will also be published in the Official Gazette.

This application will be directed to the Office of Patent Application Processing for further processing.

Telephone inquiries regarding this decision should be directed to the undersigned at (571) 272-3222.

Kenya A. McLaughlin
Petitions Attorney
Office of Petitions

UNITED STATES PATENT AND TRADEMARK OFFICE

Commissioner for Patents
United States Patent and Trademark Office
P.O. Box 1450
Alexandria, VA 22313-1450
www.uspto.gov

MAILED

JUL 19 2010

OFFICE OF PETITIONS

SLATER & MATSIL, L.L.P.
17950 PRESTON ROAD
SUITE 1000
DALLAS, TX 75252

In re Application of
Marcus Halik et al.
Application No. 12/188,966
Filed: August 8, 2008
Attorney Docket No. QM000005

DECISION ON PETITION
TO WITHDRAW
FROM RECORD

This is a decision on the Request to Withdraw as attorney or agent of record under 37 CFR. § 1.36(b), filed June 16, 2010.

The request is **NOT APPROVED** as moot.

A review of the file record indicates that the power of attorney to attorneys/agents associated with the above-identified application has been revoked by the assignee who has intervened in the application on June 18, 2010. Accordingly, the request to withdraw under 37 CFR § 1.36(b) is moot.

All future communications from the Office will continue to be directed to the below-listed address until otherwise notified by applicant.

Telephone inquires concerning this decision should be directed to the undersigned at 571-272-4584.

JoAnne Burke
Petitions Examiner
Office of Petitions

cc: John S. Economou
202 Mamaroneck Ave., Third Floor
White Plains NY 10601

UNITED STATES PATENT AND TRADEMARK OFFICE

Commissioner for Patents
United States Patent and Trademark Office
P.O. Box 1450
Alexandria, VA 22313-1450
www.uspto.gov

MAR 0 8 2010

PERKINS COIE LLP/MSFT
P. O. BOX 1247
SEATTLE WA 98111-1247

In re Application of	:	
David PROBST	:	DECISION ON PETITION
Application No. 12/188,968	:	TO MAKE SPECIAL UNDER
Filed: August 08, 2008	:	THE GREEN TECHNOLOGY
Attorney Docket No. 418268486US	:	PILOT PROGRAM

This is a decision on the petition under 37 CFR 1.102, filed December 22, 2009, to make the above-identified application special under the pilot program for applications pertaining to Green Technologies as set forth 74 Federal Register Notice 64666 (December 8, 2009).

The petition is **DISMISSED**.

If reconsideration of this decision is desired, a petition for reconsideration must be filed within ONE (1) MONTH OR THIRTY (30) DAYS from the mail date of this decision, whichever is longer. No extension of this time limit can be granted under 37 CFR 1.136(a) or (b). The petition for reconsideration should include an exhaustive attempt to provide the lacking item(s) noted below, since, after a decision on the petition for reconsideration, no further reconsideration or review of the matter will be undertaken by the Director.

A grantable petition to make an application special under 37 CFR 1.102 and the pilot program as set forth in 74 FR 64666 must be directed to a nonprovisional application filed under 35 USC 111(a) or be a national stage entry under 35 USC 371, exclusive of any reissue applications and be filed prior to the date of the notice, December 8, 2009.

In order to qualify for special status, the following requirements must be met. 1) The application must be classified in one of the eligible US classifications listed in section VI of the notice. 2) The application must have no more than 3 independent claims and no more than 20 total claims. 3) The application must not contain any multiple dependent claims. 4) The petition must state the basis for seeking special status, i.e., the claimed invention either: A) materially enhances the quality of the environment or B) materially contributes to: i) the discovery or development of renewable energy resources, ii) the more efficient utilization and conservation of energy resources, or iii) greenhouse gas emission reduction. 5) If the disclosure is not clear on its face that the claimed invention materially contributes under category (A) or (B), the petition must be accompanied by a statement by the applicant, assignee, or an attorney/agent registered to practice before the Office explaining how the materiality standard is met. 6) A statement that applicant will agree to make an election

without traverse in a telephonic interview if a restriction requirement is made by the examiner. 7) The petition to make special must be filed electronically. 8) The petition must be filed at least one day prior to the date that a first Office Action appears in the Patent Application Information Retrieval (PAIR) system. 9) The petition must be accompanied by a request for early publication in compliance with 37 CFR 1.219 and include the publication fee as set forth in 37 CFR 1.18(d).

The requirement for a fee for consideration of the petition to make special for applications pertaining to Green Technologies has been waived.

The petition lacks items 1 and 5.

In regard to item 1, petitioner should note that this application has been classified in an area (USPC 705/7.000) that is not one of the eligible US classifications listed in section VI of the notice. Therefore, this application is not eligible for the Pilot Program. The classification limitations are purposefully made to be narrow for the Pilot Program; however, these may be expanded based upon the success of the Pilot Program. Petitioner may file a preliminary amendment that would cause this application to be classified elsewhere. However, while petitioner may suggest a classification (see, e.g., MPEP 708.02(a)(VII)(C)), the application will be assigned to the most appropriate classification based upon current U.S. classification guidelines. Furthersmore, a petition for the Pilot Program should not be filed until and unless all of the requirements set forth in the Notice are met; i.e., a petition should not be filed for an application that is currently classified outside the eligible classifications set forth in the Notice.

Petitioner suggests that the instant application be classified in 705/35. However, the application has been assigned to the USPC area of 705/7.000 which is the most appropriate classification and the best examinable area for the claimed invention based upon current U.S. classification guidelines.

In regard to item 5, petitioner should note that the instant petition includes a statement identifying the basis for the special status (i.e., whether the instant invention (1) materially enhances the quality of the environment or materially contributes to (2) development of renewable energy resources or energy conservation, or (3) greenhouse gas reduction) as required by sections II and III of the notice. However, as stated in the notice, applicant must also provide a statement pertaining to the materiality standard if the application disclosure is not clear on its face as to the materiality of the basis for the special status of the invention. Petitioner alleges in the support statement that the invention provides an environmental tracking system for modeling the processes of an organization to help said organization evaluate possible changes in their processes that can lessen harmful emissions. However, petitioner's support statement is merely a speculation on how the instant invention can be used to improve a process of an organization that contributes to the more efficient utilization of energy and energy conservation. As stated in the notice, the materiality standard does not permit an applicant to speculate as to how a hypothetical end-user might specially apply the invention in a manner than could materially contribute to category (A) or (B). *Also see MPEP § 708.02 (VI).* Accordingly, it is not agreed that the application on its face meets that materiality standard.

Any reconsideration of this decision should be submitted through the USPTO electronic filing system, EFS-Web, and selecting the document description of "Petition for Green Tech Pilot" on the EFS-Web screen.

Telephone inquiries concerning this decision should be directed to Lanna Mai at 571-272-6867.

The application is being forwarded to the Technology Center Art Unit 3623 for action in its regular turn.

/Lanna Mai/

Lanna Mai
Quality Assurance Specialist
Technology Center 3600

UNITED STATES PATENT AND TRADEMARK OFFICE

Commissioner for Patents
United States Patent and Trademark Office
P.O. Box 1450
Alexandria, VA 22313-1450
www.uspto.gov

LARSON NEWMAN ABEL & POLANSKY, LLP
5914 WEST COURTYARD DRIVE
SUITE 200
AUSTIN TX 78730

COPY MAILED
DEC 1 2 2008

In re Application of James R. Utz et al. Application No. 12/189,005 Filed: August 8, 2008 Attorney Docket No. **DC-15388**	DECISION ACCORDING STATUS UNDER 37 CFR 1.47(a)

This decision is in response to the petition filed November 24, 2008 under 37 CFR 1.47(a).

The petition under 37 CFR 1.47(a) is **GRANTED**.

The above-identified application was filed on August 8, 2008, without an executed oath or declaration. A Notice to File Missing Parts was mailed August 22, 2008 and in response, *inter alia*, an oath or declaration, signed by all joint inventors except joint inventor Loadman was filed with the instant petition under 37 CFR 1.47(a). Petitioners seek status under 37 CFR 1.47 claiming that joint inventor Loadman refuses to join in the application.

A grantable petition under 37 CFR 1.47(a) requires: (1) proof that the non-signing inventor cannot be reached or refuses to sign the oath or declaration after having been presented with the application papers (specification, claims and drawings); (2) an acceptable oath or declaration in compliance with 35 U.S.C. §§ 115 and 116; (3) the petition fee; and (4) a statement of the last known address of the non-signing inventor.

The petition bears proof that the application papers were forwarded to joint inventor Loadman and that to date, he has not returned an executed copy of the oath or declaration.

The above-identified application and papers have been reviewed and found in compliance with 37 CFR 1.47(a). In view thereof, this application is hereby accorded Rule 1.47(a) status.

Deposit account no. 50-3797 has been charged in the amount of $130.00 for a one

month extension of time to make the response timely and to avoid abandonment, using the general authorization found in the petition.

Thus, as provided in Rule 1.47c, this Office will forward notice of this application's filing to the non-signing inventor at the address given in the petition. Notice of the filing of this application will also be published in the Official Gazette.

This matter is being referred to the Office of Patent Application Processing for further pre-examination processing.

Telephone inquiries concerning this matter may be directed to the undersigned Petitions Attorney at (571) 272-3212.

Patricia Faison-Ball

Patricia Faison-Ball
Senior Petitions Attorney
Office of Petitions

UNITED STATES PATENT AND TRADEMARK OFFICE

COMMISSIONER FOR PATENTS
UNITED STATES PATENT AND TRADEMARK OFFICE
P.O. BOX 1450
ALEXANDRIA, VA 22313-1450
www.uspto.gov

GENENTECH, INC.
1 DNA WAY
SOUTH SAN FRANCISCO CA 94080

MAILED

JUL 16 2009

OFFICE OF PETITIONS

Applicant: Ferrara
Appl. No.: 12/189,012
Filing Date: August 8, 2008
Title: POLYPEPTIDES HOMOLOGOUS TO VEGF AND BMP1
Attorney Docket No.: P1122P2D3C2
Pub. No.: 2009/0012003 A1
Pub. Date: January 8, 2009

This is a decision on the request for corrected of patent application publication under 37 CFR 1.221(b), received on February 19, 2009, for the above-identified application. The request is granted.

The corrected patent application publication will be published in due course, unless the patent issues before the application is republished.

It would greatly benefit the Office if **applicant did not provide copies of papers**, which were previously submitted and/or **a complete copy of the pre-grant publication**, as it unnecessarily increases the cost to the Office. See 37 CFR 1.4(b). A request for corrected publication need only point out what was printed incorrectly in the application, where the error occurs in the publication and where the correct text or drawing is found in the application papers. Marked up relevant copies of the applications papers and the pre-grant publication may facilitate processing of the request, where it is not readily apparent where the error occurs. If it is not clear why the error is a material error, further explanation may be warranted.

Inquiries relating to this matter may be directed to Mark Polutta at (571) 272-7709.

Mark Polutta
Senior Legal Advisor
Office of Patent Legal Administration
Office of the Deputy Commissioner
for Patent Examination Policy

UNITED STATES PATENT AND TRADEMARK OFFICE

Commissioner for Patents
United States Patent and Trademark Office
P.O. Box 1450
Alexandria, VA 22313-1450
www.uspto.gov

SNELL & WILMER L.L.P. (Main)
400 EAST VAN BUREN
ONE ARIZONA CENTER
PHOENIX AZ 85004-2202

COPY MAILED
NOV 20 2008

In re Application of	:	
Hossfeld et al.	:	NOTICE
Application No. 12/189025	:	
Filing/371(c) Date: 08/08/2008	:	
Attorney Docket Number: 42892.1617	:	

This is a notice regarding request for acceptance of a fee deficiency submission under 37 CFR 1.28. On September 1, 1998, the Court of Appeals for the Federal Circuit held that 37 CFR 1.28(c) is the sole provision governing the time for correction of the erroneous payment of the issue fee as a small entity. **See DH Technology v. Synergystex International, Inc. 154 F.3d 1333, 47 USPQ2d 1865 (Fed. Cir. Sept. 1, 1998).**

The Office no longer investigates or rejects original or reissue applications under 37 CFR 1.56. **1098 Off. Gaz. Pat. Office 502 (January 3, 1989)**. Therefore, nothing in this Notice is intended to imply that an investigation was done.

Your fee deficiency submission under 37 CFR 1.28 is hereby **ACCEPTED**.

The difference between the small and large entity utility search and examination fees has been charged to Petitioner's deposit account as authorized in the petition. Applicant is advised that the utility filing fee for filing electronically on or after December 8, 2008 is $75.00 for both small and large entities. As such, there is no fee deficiency in the basic filing fee.

This application is no longer entitled to small entity status. Accordingly, all future fees paid in this application must be paid at the large entity rate.

Telephone inquiries concerning this Notice should be directed to the undersigned at (571) 272-3232.

/Derek L. Woods/
Derek L. Woods
Attorney
Office of Petitions

UNITED STATES PATENT AND TRADEMARK OFFICE

Commissioner for Patents
United States Patent and Trademark Office
P.O. Box 1450
Alexandria, VA 22313-1450
www.uspto.gov

EVERETT D. ROBINSON
ECHELON IP, LLC
P.O. BOX 1047
AMERICAN FORK, UT 84003-1047

COPY MAILED

NOV 0 6 2008

OFFICE OF PETITIONS

In re Application of	:	
Garry BROWN	:	
Application No. 12/189,031	:	DECISION ON PETITION
Filed: August 8, 2008	:	TO MAKE SPECIAL UNDER
Attorney Docket No. 998969EDR	:	37 CFR 1.102(c)(1)
	:	

This is a decision on the petition under 37 CFR 1.102(c)(1), filed October 20, 2008, to make the above-identified application special based on applicant's age as set forth in M.P.E.P. § 708.02, Section IV.

The petition is **DISMISSED**.

A grantable petition to make an application special under 37 CFR 1.102(c)(1) and MPEP § 708.02, Section IV: Applicant's Age, must be accompanied by evidence showing that at least one of the applicants is 65 years of age, or more, such as a birth certificate or a statement by applicant. No fee is required.

The instant petition does not include: (1) the name, signature and registration number of the representative making the certification; and (2) the complete name of at least one inventor who is 65 years of age or more.

The application information should also be completed.

Petitioner/applicant is cautioned to avoid submitting personal information in documents filed in a patent application that may contribute to identity theft. Personal information such as social security numbers, bank account numbers, or credit card numbers (other than a check or credit card authorization form PTO-2038 submitted for payment purposes) is never required by the USPTO to support a petition or an application. If this type of personal information is included in documents submitted to the USPTO, petitioners/applicants should consider redacting such personal information from the documents before submitting them to the USPTO. Petitioner/applicant is advised that the record of a patent application is available to the public after publication of the application (unless a non-publication request in compliance with 37 CFR 1.213(a) is made in the application) or issuance of a patent. Furthermore, the record from an abandoned application may also be available to the public if the application is referenced in a published application or an issued patent (see 37 CFR 1.14).

Further correspondence with respect to this matter should be addressed as follows:

By Mail: Mail Stop PETITION
Commissioner for Patents
P. O. Box 1450
Alexandria, VA 22313-1450

By hand: U. S. Patent and Trademark Office
Customer Service Window, Mail Stop Petitions
Randolph Building
401 Dulany Street
Alexandria, VA 22314

By FAX: (571) 273-8300

Telephone inquiries concerning this decision should be directed to the undersigned at 571-272-6735.

The application is being forwarded to the Office of Patent Application Processing for processing in its regular turn.

Diane Goodwyn
Petitions Examiner
Office of Petitions

UNITED STATES PATENT AND TRADEMARK OFFICE

Commissioner for Patents
United States Patent and Trademark Office
P.O. Box 1450
Alexandria, VA 22313-1450
www.uspto.gov

EVERETT D. ROBINSON
ECHELON IP, LLC
P.O. BOX 1047
AMERICAN FORK, UT 84003-1047

COPY MAILED

DEC 0 2 2008

OFFICE OF PETITIONS

In re Application of	:	
Garry BROWN	:	
Application No. 12/189,031	:	DECISION ON PETITION
Filed: August 8, 2008	:	TO MAKE SPECIAL UNDER
Attorney Docket No. 998969EDR	:	37 CFR 1.102(c)(1)
	:	

This is a decision on the petition under 37 CFR 1.102(c)(1), filed November 19, 2008, to make the above-identified application special based on applicant's age as set forth in M.P.E.P. § 708.02, Section IV.

The petition is **DISMISSED**.

A grantable petition to make an application special under 37 CFR 1.102(c)(1) and MPEP § 708.02, Section IV: Applicant's Age, must be accompanied by evidence showing that at least one of the applicants is 65 years of age, or more, such as a birth certificate or a statement by applicant. No fee is required.

The instant petition does not include: (1) the name, signature and registration number of the representative making the certification; and (2) the complete name of at least one inventor who is 65 years of age or more.

The application information should also be completed.

Petitioner/applicant is cautioned to avoid submitting personal information in documents filed in a patent application that may contribute to identity theft. Personal information such as social security numbers, bank account numbers, or credit card numbers (other than a check or credit card authorization form PTO-2038 submitted for payment purposes) is never required by the USPTO to support a petition or an application. If this type of personal information is included in documents submitted to the USPTO, petitioners/applicants should consider redacting such personal information from the documents before submitting them to the USPTO. Petitioner/applicant is advised that the record of a patent application is available to the public after publication of the application (unless a non-publication request in compliance with 37 CFR 1.213(a) is made in the application) or issuance of a patent. Furthermore, the record from an abandoned application may also be available to the public if the application is referenced in a published application or an issued patent (see 37 CFR 1.14).

Further correspondence with respect to this matter should be addressed as follows:

By Mail: Mail Stop PETITION
Commissioner for Patents
P. O. Box 1450
Alexandria, VA 22313-1450

By hand: U. S. Patent and Trademark Office
Customer Service Window, Mail Stop Petitions
Randolph Building
401 Dulany Street
Alexandria, VA 22314

By FAX: (571) 273-8300

Telephone inquiries concerning this decision should be directed to the undersigned at 571-272-6735.

The application is being forwarded to the Office of Patent Application Processing for processing in its regular turn.

Diane Goodwyn
Petitions Examiner
Office of Petitions

UNITED STATES PATENT AND TRADEMARK OFFICE

UNITED STATES DEPARTMENT OF COMMERCE
United States Patent and Trademark Office
Address: COMMISSIONER FOR PATENTS
P.O. Box 1450
Alexandria, Virginia 22313-1450
www.uspto.gov

FOLEY & LARDNER
555 South Flower Street
SUITE 3500
LOS ANGELES, CA 90071-2411

Mail Date: 04/21/2010

Applicant	: Rebecca Gottlieb	: DECISION ON REQUEST FOR
Patent Number	: 7634893	: RECALCULATION of PATENT
Issue Date	: 12/22/2009	: TERM ADJUSTMENT IN VIEW
Appliction No	: 12/189,077	: OF WYETH AND NOTICE OF INTENT TO
Filed	: 08/08/2008	: ISSUE CERTIFICATE OF CORRECTION
		:

The Request for Recalculation is **GRANTED** to the extent indicated.

The patent term adjustment has been determined to be **0** days. The USPTO will *sua sponte* issue a certificate of correction reflecting the amount of PTA days determined by the recalculation.

Prior to the issuance of the certificate of correction, the USPTO will afford patentee an opportunity to be heard and request reconsideration. Accordingly, patentee has **one month or thirty (30) days**, whichever is longer, to file a request for reconsideration of this patent term adjustment calculation. See 35 U.S.C. 154(b)(3)(B)(ii) and 37 CFR 1.322(a)(4). No extensions of time will be granted under 37 CFR 1.136.

Patentee should use document code PET.OP if electronically filing a request for reconsideration of this patent term adjustment calculation. The patentee must also include the information required by 37 CFR 1.705(b)(2) and the fee required by 37 CFR 1.18(e). If patentee does not file a timely request for reconsideration of this patent term adjustment calculation including the information required by 37 CFR 1.705(b)(2) and the fee required by 37 CFR 1.18(e), the USPTO will issue a certificate of correction reflecting the PTA determination noted above.

Patentee should be aware that in order to preserve the right to review in the United States District Court for the District of Columbia of the USPTO patent term adjustment determination, patentee must ensure that he or she also take the steps required under 35 U.S.C. 154(b)(4)(A) in a timely manner. Nothing in the request for recalculation should be construed as providing an alternative time frame for commencing a civil action under 35 U.S.C. 154(b)(4)(A).

Any questions concerning this decision should be directed to the Office of Patent Legal Administration at 571-272-7702.

UNITED STATES PATENT AND TRADEMARK OFFICE

UNITED STATES DEPARTMENT OF COMMERCE
United States Patent and Trademark Office
Address: COMMISSIONER FOR PATENTS
P.O. Box 1450
Alexandria, Virginia 22313-1450
www.uspto.gov

APPLICATION NO.	FILING DATE	FIRST NAMED INVENTOR	ATTORNEY DOCKET NO.	CONFIRMATION NO.
12/189,143	08/09/2008	Claudius Feger	YOR920020249US3	6399

68503 7590 04/21/2010
DAVID AKER
23 SOUTHERN ROAD
HARTSDALE, NY 10530

EXAMINER
WONG, ERIC K

ART UNIT	PAPER NUMBER
2883	

MAIL DATE	DELIVERY MODE
04/21/2010	PAPER

Please find below and/or attached an Office communication concerning this application or proceeding.

The time period for reply, if any, is set in the attached communication.

UNITED STATES PATENT AND TRADEMARK OFFICE

Commissioner for Patents
United States Patent and Trademark Office
P.O. Box 1450
Alexandria, VA 22313-1450
www.uspto.gov

DAVID AKER
23 SOUTHERN ROAD
HARTSDALE, NY 10530

In re Application of:	:	
Claudius Feger et al.	:	DECISION *SUA SPONTE*
Serial No.: 12/189,143	:	WITHDRAWING HOLDING
Filed: August 9, 2008	:	OF ABANDONMENT
Attorney Docket No.: YOR920020249US3	:	

This is a decision, *sua sponte*, withdrawing the holding of abandonment of the above-identified application.

A Non-Final Office action was mailed on May 14, 2009. A Response to the Non-Final Office action, along with a fee for a three month extension of time, was filed on November 20, 2009.

A Notice of Abandonment was mailed on December 12, 2009.

Although no petition or request to withdraw the holding of abandonment in this application has been filed, the Notice of Abandonment is hereby vacated, the holding of abandonment withdrawn and the application restored to pending status. The application is being forwarded to the examiner for consideration of the Response.

Inconvenience to the applicant is regretted.

Any inquiry regarding this decision should be directed to Mark Robinson, Supervisory Patent Examiner, at (571) 272-2319.

Richard Seidel, Director
Technology Center 2800
Semiconductors, Electrical and Optical
Systems and Components

UNITED STATES PATENT AND TRADEMARK OFFICE

UNITED STATES DEPARTMENT OF COMMERCE
United States Patent and Trademark Office
Address: COMMISSIONER FOR PATENTS
P.O. Box 1450
Alexandria, Virginia 22313-1450
www.uspto.gov

APPLICATION NO.	FILING DATE	FIRST NAMED INVENTOR	ATTORNEY DOCKET NO.	CONFIRMATION NO.
12/189,157	08/10/2008	Mohamed M. Hilali	TwinP001CIP/TCA-001-1	6479

67362 7590 03/22/2010
THE MUELLER LAW OFFICE, P.C.
12951 Harwick Lane
San Diego, CA 92130

EXAMINER
AYAD, TAMIR

ART UNIT	PAPER NUMBER
1795	

NOTIFICATION DATE	DELIVERY MODE
03/22/2010	ELECTRONIC

Please find below and/or attached an Office communication concerning this application or proceeding.

The time period for reply, if any, is set in the attached communication.

Notice of the Office communication was sent electronically on above-indicated "Notification Date" to the following e-mail address(es):

heather@themuellerlawoffice.com
contact@themuellerlawoffice.com
jack@themuellerlawoffice.com

UNITED STATES PATENT AND TRADEMARK OFFICE

Commissioner for Patents
United States Patent and Trademark Office
P.O. Box 1450
Alexandria, VA 22313-1450
www.uspto.gov

THE MUELLER LAW OFFICE, P.C.
12951 Harwick Lane
San Diego CA 92130

MAR 2 2 2010

In re Application of	:	
Hilali et al.	:	DECISION ON PETITION
Application No. 12/189,157	:	TO MAKE SPECIAL UNDER
Filed: 8/10/2008	:	THE GREEN TECHNOLOGY
Attorney Docket No. **TwinP001CIP/TCA-001-1**	:	PILOT PROGRAM

This is a decision on the petition under 37 CFR 1.102, filed 3/16/2010, to make the above-identified application special under the pilot program for applications pertaining to Green Technologies as set forth 74 Federal Register Notice 64666 (December 8, 2009).

The petition is **GRANTED**.

A grantable petition to make an application special under 37 CFR 1.102 and the pilot program as set forth in 74 FR 64666 must be directed to a nonprovisional application filed under 35 USC 111(a) or be a national stage entry under 35 USC 371, exclusive of any reissue applications and be filed prior to the date of the notice, December 8, 2009.

In order to qualify for special status, the following requirements must be met. 1) The application must be classified in one of the eligible US classifications listed in section VI of the notice. 2) The application must have no more than 3 independent claims and no more than 20 total claims. 3) The application must not contain any multiple dependent claims. 4) The petition must state the basis for seeking special status, i.e., the claimed invention either: A) materially enhances the quality of the environment or B) materially contributes to: i) the discovery or development of renewable energy resources, ii) the more efficient utilization and conservation of energy resources, or iii) greenhouse gas emission reduction. 5) If the disclosure is not clear on its face that the claimed invention materially contributes under category (A) or (B), the petition must be accompanied by a statement by the applicant, assignee, or an attorney/agent registered to practice before the Office explaining how the materiality standard is met. 6) A statement that applicant will agree to make an election without traverse in a telephonic interview if a restriction requirement is made by the examiner. 7) The petition to make special must be filed electronically. 8) The petition must be filed at least one day prior to the date that a first Office Action appears in the Patent Application Information Retrieval (PAIR) system. 9) The petition must be accompanied by a request for early publication in compliance with 37 CFR 1.219 and include the publication fee as set forth in 37 CFR 1.18(d).

The requirement for a fee for consideration of the petition to make special for applications pertaining to Green Technologies has been waived.

The instant petition complies with items 1 – 9 above. Accordingly, the above-identified application has been accorded "special" status.

Telephone inquires concerning this decision should be directed to Tom Dunn at 571-272-1171.

The application is being forwarded to the Technology Center Art Unit 1795 for action on the merits commensurate with this decision.

/Tom Dunn/

Tom Dunn
Quality Assurance Specialist
Technology Center 1700

UNITED STATES PATENT AND TRADEMARK OFFICE

UNITED STATES DEPARTMENT OF COMMERCE
United States Patent and Trademark Office
Address: COMMISSIONER FOR PATENTS
P.O. Box 1450
Alexandria, Virginia 22313-1450
www.uspto.gov

APPLICATION NO.	FILING DATE	FIRST NAMED INVENTOR	ATTORNEY DOCKET NO.	CONFIRMATION NO.
12/189,158	08/10/2008	Mohamed M. Hilali	TwinP007/TCA-007	6480

67362 7590 03/22/2010
THE MUELLER LAW OFFICE, P.C.
12951 Harwick Lane
San Diego, CA 92130

EXAMINER
AYAD, TAMIR

ART UNIT	PAPER NUMBER
1795	

NOTIFICATION DATE	DELIVERY MODE
03/22/2010	ELECTRONIC

Please find below and/or attached an Office communication concerning this application or proceeding.

The time period for reply, if any, is set in the attached communication.

Notice of the Office communication was sent electronically on above-indicated "Notification Date" to the following e-mail address(es):

heather@themuellerlawoffice.com
contact@themuellerlawoffice.com
jack@themuellerlawoffice.com

UNITED STATES PATENT AND TRADEMARK OFFICE

Commissioner for Patents
United States Patent and Trademark Office
P.O. Box 1450
Alexandria, VA 22313-1450
www.uspto.gov

THE MUELLER LAW OFFICE, P.C.
12951 Harwick Lane
San Diego CA 92130

MAR 22 2010

In re Application of	:	
Hilalie et al.	:	DECISION ON PETITION
Application No. 12/189,158	:	TO MAKE SPECIAL UNDER
Filed: 8/10/2008	:	THE GREEN TECHNOLOGY
Attorney Docket No. **TwinP007/TCA-007**	:	PILOT PROGRAM

This is a decision on the petition under 37 CFR 1.102, filed 3/16/2010, to make the above-identified application special under the pilot program for applications pertaining to Green Technologies as set forth 74 Federal Register Notice 64666 (December 8, 2009).

The petition is **GRANTED**.

A grantable petition to make an application special under 37 CFR 1.102 and the pilot program as set forth in 74 FR 64666 must be directed to a nonprovisional application filed under 35 USC 111(a) or be a national stage entry under 35 USC 371, exclusive of any reissue applications and be filed prior to the date of the notice, December 8, 2009.

In order to qualify for special status, the following requirements must be met. 1) The application must be classified in one of the eligible US classifications listed in section VI of the notice. 2) The application must have no more than 3 independent claims and no more than 20 total claims. 3) The application must not contain any multiple dependent claims. 4) The petition must state the basis for seeking special status, i.e., the claimed invention either: A) materially enhances the quality of the environment or B) materially contributes to: i) the discovery or development of renewable energy resources, ii) the more efficient utilization and conservation of energy resources, or iii) greenhouse gas emission reduction. 5) If the disclosure is not clear on its face that the claimed invention materially contributes under category (A) or (B), the petition must be accompanied by a statement by the applicant, assignee, or an attorney/agent registered to practice before the Office explaining how the materiality standard is met. 6) A statement that applicant will agree to make an election without traverse in a telephonic interview if a restriction requirement is made by the examiner. 7) The petition to make special must be filed electronically. 8) The petition must be filed at least one day prior to the date that a first Office Action appears in the Patent Application Information Retrieval (PAIR) system. 9) The petition must be accompanied by a request for early publication in compliance with 37 CFR 1.219 and include the publication fee as set forth in 37 CFR 1.18(d).

The requirement for a fee for consideration of the petition to make special for applications pertaining to Green Technologies has been waived.

The instant petition complies with items 1 – 9 above. Accordingly, the above-identified application has been accorded "special" status.

Telephone inquires concerning this decision should be directed to Tom Dunn at 571-272-1171.

The application is being forwarded to the Technology Center Art Unit 1795 for action on the merits commensurate with this decision.

/Tom Dunn/

Tom Dunn
Quality Assurance Specialist
Technology Center 1700

UNITED STATES PATENT AND TRADEMARK OFFICE

Commissioner for Patents
United States Patent and Trademark Office
P.O. Box 1450
Alexandria, VA 22313-1450
www.uspto.gov

Yen Jung Sung
21-80 38 St, #C8
Astoria NY 11105

MAILED

MAR 23 2010

OFFICE OF PETITIONS

In re Application of	:	
Hung-Tsun Lin	:	
Application No. 12/189,165	:	DECISION ON PETITION
Filed: August 10, 2008	:	
Attorney Docket No. JYO-014-430-1	:	

This is a decision on the petition under the unintentional provisions of 37 CFR 1.137(b), filed December 18, 2009, to revive the above-identified application.

The petition is **GRANTED**.

The application became abandoned for failure to reply in a timely manner to the Notice to File Missing Parts of Non-Provisional Application (Notice), mailed August 21, 2008. The Notice set a period for reply of two (2) months from the mail date of the Notice. No extensions of time under the provisions of 37 CFR 1.136(a) were obtained. Accordingly, the application became abandoned on October 22, 2008. A Notice of Abandonment was mailed April 28, 2009.

The petition satisfies the requirements of 37 CFR 1.137(b) in that petitioner has supplied (1) the reply in the form of a surcharge fee of $130, a basic filing fee of $330, a search fee of $540, and an examination fee of $220 (2) the petition fee of $1,620, and (3) a proper statement of unintentional delay. Accordingly the fees are accepted as being unintentionally delayed.

It is not apparent whether the person signing the statement of unintentional delay was in a position to have firsthand or direct knowledge of the facts and circumstances of the delay at issue. Nevertheless, such statement is being treated as having been made as the result of a reasonable inquiry into the facts and circumstances of such delay. See 37 CFR 10.18(b) and Changes to Patent Practice and Procedure; Final Rule Notice, 62 Fed. Reg. 53131, 53178 (October 10, 1997), 1203 Off. Gaz. Pat. Office 63, 103 (October 21, 1997). In the event that such an inquiry has not been made, petitioner must make such an inquiry. If such inquiry results in the discovery that it is not correct that the entire delay in filing the required reply from the due date for the reply until the filing of a grantable petition pursuant to 37 CFR 1.137(b) was unintentional, petitioner must notify the Office.

Telephone inquiries should be directed to the Kimberly Inabinet at (571) 272-4618.

This application is being referred to the Office of Patent Application Processing for appropriate action in the normal course of business on the reply received December 18, 2009.

/Kimberly Inabinet/

Kimberly Inabinet
Petitions Examiner
Office of Petitions

UNITED STATES PATENT AND TRADEMARK OFFICE

Commissioner for Patents
United States Patent and Trademark Office
P.O. Box 1450
Alexandria, VA 22313-1450
www.uspto.gov

DONALD J. ERSLER, S.C.
725 GARVENS AVENUE
BROOKFIELD, WI 53005

COPY MAILED
SEP 26 2008

In re Application of	:	
John C. Hoffman	:	
Application No. 12/189,216	:	DECISION ON PETITION
Filed: August 11, 2008	:	TO MAKE SPECIAL UNDER
Attorney Docket No. 1784	:	37 CFR 1.102(c)(1)
	:	

This is a decision on the petition under 37 CFR 1.102(c)(1), filed August 11, 2008, to make the above-identified application special based on applicant's age as set forth in M.P.E.P. § 708.02, Section IV.

The petition is **GRANTED**.

A grantable petition to make an application special under 37 CFR 1.102(c)(1) and MPEP § 708.02, Section IV: Applicant's Age must be accompanied by evidence showing that at least one of the applicants is 65 years of age, or more, such as a birth certificate or a statement by applicant. No fee is required

The instant petition includes a copy of applicant's birth certificate. Accordingly, the above-identified application has been accorded "special" status.

Telephone inquiries concerning this decision should be directed to undersigned at 571-272-1642.

All other inquiries concerning either the examination or status of the application should be directed to the Technology Center.

The application is being forwarded to the Office of Patent Application Processing for processing. This application will be accorded "special" status once pre-examination processing is done

April M. Wise
Petitions Examiner
Office of Petitions

UNITED STATES PATENT AND TRADEMARK OFFICE

Commissioner for Patents
United States Patent and Trademark Office
P.O. Box 1450
Alexandria, VA 22313-1450
www.uspto.gov

BEUSSE WOLTER SANKS MORA & MAIRE, P. A.
390 NORTH ORANGE AVENUE
SUITE 2500
ORLANDO FL 32801

MAILED

MAR 02 2009

OFFICE OF PETITIONS

In re Application of	:	
Higgs et al.	:	DECISION REFUSING STATUS
Application No. 12/189,250	:	UNDER 37 CFR 1.47(a)
Filed: August 11, 2008	:	
Attorney Docket No. 11235-002	:	

This is in response to the petition under 37 CFR 1.47(a), filed January 25, 2009.

The petition is dismissed.

Rule 47 applicant is given TWO MONTHS from the mailing date of this decision to reply, correcting the below-noted deficiencies. Any reply should be entitled "Request for Reconsideration of Petition Under 37 CFR 1.47(a)," and should only address the deficiencies noted below, except that the reply may include an oath or declaration executed by the non-signing inventor. **FAILURE TO RESPOND WILL RESULT IN ABANDONMENT OF THE APPLICATION.** Any extensions of time will be governed by 37 CFR 1.136(a).

A grantable petition under 37 CFR 1.47(a) requires: (1) proof that the non-signing inventor cannot be reached or refuses to sign the oath or declaration after having been presented with the application papers (specification, claims and drawings); (2) an acceptable oath or declaration in compliance with 35 U.S.C. §§ 115 and 116; (3) the petition fee; and (4) a statement of the last known address of the non-signing inventor. Applicant lacks item(s) (1) set forth above.

As to item (1), rule 47 applicant must demonstrate with documented evidence that an inventor refuses to join in the application after having been presented with the application papers (specification, claims, drawings and oath or declaration). There is no indication herein that joint inventors Higgs and Davis were presented with a copy of the complete application papers for this application. From the evidence of record, it only appears that the joint inventors were presented with a copy of the Declaration/Power of Attorney and Assignment documents. If the joint inventors were not presented with a copy of the application papers for this application, then the joint inventors could not attest that they have "reviewed and understand the application papers" and could not execute the declaration they were requested to sign. Did the joint inventors receive a copy of the application papers? The fact that an application may contain proprietary information does not relieve the rule 47 applicant of the responsibility to present the application papers to the joint inventors if the inventors are willing to receive the papers in order to sign the oath or declaration. Unless petitioner can show that a copy of the application papers was presented to the joint inventors, then petitioner will have to mail a copy of the complete

application papers (specification, claims and drawings) to the last known address of the joint inventors , return receipt requested. A cover letter of instructions should accompany the mailing of the application papers setting a deadline or a statement that no response will constitute a refusal. This sort of ultimatum lends support to a finding of refusal by conduct. **The proof of the pertinent events should be made by a statement of someone with firsthand knowledge of the events and should include documentary evidence, such as certified mail return receipt, cover letter of instructions, telegram, etc.** *See* MPEP 409.03(d).

Further correspondence with respect to this matter should be addressed as follows:

By mail: Mail Stop PETITIONS
Commissioner for Patents
Post Office Box 1450
Alexandria, VA 22313-1450

By hand: Customer Service Window
Mail Stop Petitions
Randolph Building
401 Dulany Street
Alexandria, VA 22314

By fax: (571) 273-8300
ATTN: Office of Petitions

Telephone inquiries should be directed to the undersigned at (571) 272-3215.

Charlema Grant

Charlema Grant
Petitions Attorney
Office of Petitions

UNITED STATES PATENT AND TRADEMARK OFFICE

Commissioner for Patents
United States Patent and Trademark Office
P.O. Box 1450
Alexandria, VA 22313-1450
www.uspto.gov

BEUSSE WOLTER SANKS MORA & MAIRE, P. A.
390 NORTH ORANGE AVENUE
SUITE 2500
ORLANDO FL 32801

MAILED

JUN 12 2009

OFFICE OF PETITIONS

In re Application of	:	
Nancy Higgs, Taylor Vaughan and Sandra B.	:	DECISION GRANTING STATUS
Davis	:	UNDER 37 CFR 1.47(a)
Application No. 12/189,250	:	
Filed: August 11, 2008	:	
Attorney Docket No. 11235-002		

This is in response to the renewed petition under 37 CFR 1.47(a), filed May 4, 2009.

The petition is **GRANTED.**

Petitioner has shown that the non-signing inventor Higgs and Davis have refused to join in the filing of the above-identified application.

The application and papers have been reviewed and found in compliance with 37 CFR 1.47(a). This application is hereby accorded Rule 1.47(a) status.

As provided in 37 CFR 1.47(c), this Office will forward notice of this application's filing to the non-signing inventor at the address given in the petition. Notice of the filing of this application will also be published in the Official Gazette.

This application is being referred to the Office of Patent Application Processing for further processing.

Telephone inquiries regarding this decision should be directed to the undersigned at (571) 272-3215.

Charlema Grant
Petitions Attorney
Office of Petitions

UNITED STATES PATENT AND TRADEMARK OFFICE

Commissioner for Patents
United States Patent and Trademark Office
P.O. Box 1450
Alexandria, VA 22313-1450
www.uspto.gov

Nancy Higgs
7860 Casuarina Drive
South Melbourne Beach, Florida 32951

MAILED

JUN 12 2009

OFFICE OF PETITIONS

In re Application of
Nancy Higgs, Taylor Vaughan and Sandra B. Davis
Application No. 12/189,250
Filed: August 11, 2008
Attorney Docket No. 11235-002
For: Method and System For The Preparation of the General Education Development Test

Dear Madam:

You are named as a joint inventor in the above-identified United States patent application, filed under the provisions of 35 U.S.C. 116 (United States Code), and 37 CFR 1.47(a), Rules of Practice in Patent Cases. Should a patent be granted on the application you will be designated therein as a joint inventor.

As a named inventor you are entitled to inspect any paper in the file wrapper of the application, order copies of all or any part thereof (at a prepaid cost per 37 CFR 1.19) or make your position of record in the application. Alternatively, you may arrange to do any of the preceding through a registered patent attorney or agent presenting written authorization from you. If you care to join the application, counsel of record (see below) would presumably assist you. Joining the application would entail the filing of an appropriate oath or declaration by you pursuant to 37 CFR 1.63.

Telephone inquiries regarding this communication should be directed to the undersigned at (571) 272-3215. Requests for information regarding your application should be directed to the File Information Unit at (703) 308-2733. Information regarding how to pay for and order a copy of the application, or a specific paper in the application, should be directed to the Certification Division at (571) 272-3150 or 1 (800) 972-6382 (outside the Washington, DC area).

Charlema Grant
Petitions Attorney
Office of Petitions

cc: BEUSSE WOLTER SANKS MORA & MAIRE, P. A.
390 NORTH ORANGE AVENUE
SUITE 2500
ORLANDO FL 32801

UNITED STATES PATENT AND TRADEMARK OFFICE

Commissioner for Patents
United States Patent and Trademark Office
P.O. Box 1450
Alexandria, VA 22313-1450
www.uspto.gov

Sandra Davis
8038 Mill Creek Run
Signal Mountain, TN 37377

MAILED

JUN 12 2009

OFFICE OF PETITIONS

In re Application of
Nancy Higgs, Taylor Vaughan and Sandra B. Davis
Application No. 12/189,250
Filed: August 11, 2008
Attorney Docket No. 11235-002
For: Method and System For The Preparation of the General Education Development Test

Dear Madam:

You are named as a joint inventor in the above-identified United States patent application, filed under the provisions of 35 U.S.C. 116 (United States Code), and 37 CFR 1.47(a), Rules of Practice in Patent Cases. Should a patent be granted on the application you will be designated therein as a joint inventor.

As a named inventor you are entitled to inspect any paper in the file wrapper of the application, order copies of all or any part thereof (at a prepaid cost per 37 CFR 1.19) or make your position of record in the application. Alternatively, you may arrange to do any of the preceding through a registered patent attorney or agent presenting written authorization from you. If you care to join the application, counsel of record (see below) would presumably assist you. Joining the application would entail the filing of an appropriate oath or declaration by you pursuant to 37 CFR 1.63.

Telephone inquiries regarding this communication should be directed to the undersigned at (571) 272-3215. Requests for information regarding your application should be directed to the File Information Unit at (703) 308-2733. Information regarding how to pay for and order a copy of the application, or a specific paper in the application, should be directed to the Certification Division at (571) 272-3150 or 1 (800) 972-6382 (outside the Washington, DC area).

Charlema Grant
Petitions Attorney
Office of Petitions

cc: BEUSSE WOLTER SANKS MORA & MAIRE, P. A.
390 NORTH ORANGE AVENUE
SUITE 2500
ORLANDO FL 32801

UNITED STATES PATENT AND TRADEMARK OFFICE

UNITED STATES DEPARTMENT OF COMMERCE
United States Patent and Trademark Office
Address: COMMISSIONER FOR PATENTS
P.O. Box 1450
Alexandria, Virginia 22313-1450
www.uspto.gov

LERNER GREENBERG STEMER LLP
P O BOX 2480
HOLLYWOOD, FL 33022-2480

Mail Date: 04/21/2010

Applicant	: Andreas Fuchs	: DECISION ON REQUEST FOR
Patent Number	: 7644507	: RECALCULATION of PATENT
Issue Date	: 01/12/2010	: TERM ADJUSTMENT IN VIEW
Appliction No	: 12/189,252	: OF WYETH AND NOTICE OF INTENT TO
Filed	: 08/11/2008	: ISSUE CERTIFICATE OF CORRECTION
		:

The Request for Recalculation is **GRANTED** to the extent indicated.

The patent term adjustment has been determined to be **0** days. The USPTO will *sua sponte* issue a certificate of correction reflecting the amount of PTA days determined by the recalculation.

Prior to the issuance of the certificate of correction, the USPTO will afford patentee an opportunity to be heard and request reconsideration. Accordingly, patentee has **one month or thirty (30) days**, whichever is longer, to file a request for reconsideration of this patent term adjustment calculation. See 35 U.S.C. 154(b)(3)(B)(ii) and 37 CFR 1.322(a)(4). No extensions of time will be granted under 37 CFR 1.136.

Patentee should use document code PET.OP if electronically filing a request for reconsideration of this patent term adjustment calculation. The patentee must also include the information required by 37 CFR 1.705(b)(2) and the fee required by 37 CFR 1.18(e). If patentee does not file a timely request for reconsideration of this patent term adjustment calculation including the information required by 37 CFR 1.705(b)(2) and the fee required by 37 CFR 1.18(e), the USPTO will issue a certificate of correction reflecting the PTA determination noted above.

Patentee should be aware that in order to preserve the right to review in the United States District Court for the District of Columbia of the USPTO patent term adjustment determination, patentee must ensure that he or she also take the steps required under 35 U.S.C. 154(b)(4)(A) in a timely manner. Nothing in the request for recalculation should be construed as providing an alternative time frame for commencing a civil action under 35 U.S.C. 154(b)(4)(A).

Any questions concerning this decision should be directed to the Office of Patent Legal Administration at 571-272-7702.

UNITED STATES PATENT AND TRADEMARK OFFICE

UNITED STATES DEPARTMENT OF COMMERCE
United States Patent and Trademark Office
Address: COMMISSIONER FOR PATENTS
P.O. Box 1450
Alexandria, Virginia 22313-1450
www.uspto.gov

APPLICATION NO.	FILING DATE	FIRST NAMED INVENTOR	ATTORNEY DOCKET NO.	CONFIRMATION NO.
12/189,304	08/11/2008	Harry I. Linzer	RPS920070201US2	6760

59369 7590 01/30/2009
CANTOR COLBURN LLP - IBM RESEARCH TRIANGLE PARK
20 Church Street
22nd Floor
Hartford, CT 06103

EXAMINER

ART UNIT	PAPER NUMBER
2117	

NOTIFICATION DATE	DELIVERY MODE
01/30/2009	ELECTRONIC

Please find below and/or attached an Office communication concerning this application or proceeding.

The time period for reply, if any, is set in the attached communication.

Notice of the Office communication was sent electronically on above-indicated "Notification Date" to the following e-mail address(es):

usptopatentmail@cantorcolburn.com

UNITED STATES PATENT AND TRADEMARK OFFICE

Commissioner for Patents
United States Patent and Trademark Office
P.O. Box 1450
Alexandria, VA 22313-1450
www.uspto.gov

01/29/09

CANTOR COLBURN LLP - IBM
RESEARCH TRIANGLE PARK
20 CHURCH STREET
22nd floor
HARTFORD, CT 06103

In re Application of: Harry I. LINZER Serial No.: 12/189,304 Filed: August 11, 2008 Docket: RPS920070201US2 Title: METHODS FOR THE SUPPORT OF JTAG FOR SOURCE SYNCHRONOUS INTERFACES	DECISION ON PETITION TO MAKE SPECIAL FOR NEW APPLICATION UNDER 37 C.F.R. § 1.102 & M.P.E.P. § 708.02

This is a decision on the petition filed on August 11, 2008 to make the above-identified application special for accelerated examination procedure under 37 C.F.R. § 1.102(d).

The petition to make the application special is **DISMISSED**.

REGULATION AND PRACTICE

A grantable petition to make special under 37 C.F.R. § 1.102(d) and pursuant to the "Change to Practice for Petitions in Patent Applications to Make Special and for Accelerated Examination" published in the Federal Register on June 26, 2006 (71 Fed. Reg. 36323), must satisfy the following conditions:

I. Conditions Regarding the Application:

1. the application must be a non-reissue utility or design application filed under 37 CFR 1.111(a);

2. the application, the petition and the required fees must be filed electronically using the USPTO's electronic filing system (EFS), or EFS-web; if not filed electronically, a statement asserting that EFS and EFS-web were not available during the normal business hours.

3. at the time of filing, the application must be complete under 37 CFR 1.51 and in condition for examination;

4. the application must contain three or fewer independent claims and twenty or fewer total claims and the claims must be directed to a single invention.

II. Conditions Regarding the Petition:

The petition must:

1. be filed with the application;

2. include a statement that applicant agrees not to separately argue the patentability of any dependent claim during any appeal in the application;

3. include a statement that applicant agrees to make an election without traverse in a telephone interview.

4. include a statement that applicant agrees to conduct such an interview when requested by the examiner.

5. include a statement, made based on a good faith belief, that a preexamination search in compliance with the following requirements, was conducted, including an identification of the field of search by United States class and subclass, where applicable, and for database searches, the search logic or chemical structure or sequence used as a query, the name of the file(s) searched and the database service, and the date of the search.

The preexamination search must:

5.1 involve U.S. patents and patent application publications, foreign patent documents, and non-patent literature, unless the applicant can justify with reasonable certainty that no references more pertinent than those already identified are likely to be found in the eliminated sources and includes such a justification with this statement;

5.2. be directed to the claimed invention and encompass all of the features of the claims, giving the claims the broadest reasonable expectation;

5.3. encompass the disclosed features that may be claimed.

6. must provide in support of the petition an accelerated examination support document. An accelerated examination support document must include:

6.1. an information disclosure statement (IDS) in compliance with 37 CFR 1.98 citing each reference deemed most closely related to the subject matter of each of the claims;

6.2. an identification of all the limitations in the claims that are disclosed by the reference specifying where the limitation is disclosed in the cited reference;

6.3. a detailed explanation of how each of the claims are patentable over the references cited with particularity required by 37 CFR 1.111(b) and (c);

6.4. a concise statement of the utility of the invention as defined in each of the independent claims (unless the application is a design application);

6.5. a showing of where each limitation of the claims finds support under 35 USC 112, first paragraph, in the written description of the specification. If applicable, the showing must also identify: (1) each means- (or step) plus-function claim element that invokes consideration under 35 USC 112, sixth paragraph; and (2) the structure, material, or acts in the specification that corresponds to each means- (or step) plus-function claim element that invokes consideration under 35 USC 112, sixth paragraph; if the application claims the benefit of one or more applications under title 35, United States Code, the showing must also include where each limitation of the claims finds support under 35 USC 112, first paragraph, in each such application in which such supports exists;

6.6. an identification of any cited references that may be disqualified under 35 USC 103(c).

REVIEW OF FACTS

The conditions I. 1-4, II. 1-4, 5, 5.1-5.3, 6.1, 6.2 & 6.6 above are considered to have been met. However, the petition fails to comply with conditions II. 6.3 - 6.5 above. Therefore, the petition fails to meet the required conditions to be accorded special status under the accelerated examination procedure.

With regard to the requirement of MPEP § 708.02(a)(I.)(I)(3) and item 6.3 above, 37 CFR § 1.111 (c) states in part "the applicant or patent owner must clearly point out the patentable novelty which he or she thinks the claims present in view of the state of the art disclosed by the references cited or the objections made." Specifically, the detailed explanation of ***how each of the claims are patentable*** over the references cited ***with particularity required by 37 CFR 1.111(b) and (c)*** [***emphasis added***] is incomplete. Note, with reference to the supplemental search performed on December 7, 2007 (and referenced in the instant petition) it was assumed that after the supplemental search was completed, new references would be found that better read on the claimed invention and would be properly analyzed in the support document included with any renewed petition. However, the instant petition fails to provide a detailed explanation of how the instant claim of the instant invention is patentable over the previously cited references (in parent application 11/939,751) to Au, et al. (U.S. patent 6,681,359) and Dubey (U.S. patent 7,284,174). As identified in the earlier decisions, Petitioner did not accurately point out the particular language that patentably distinguishes the instant claims. The instant petition fails **to either 1)** provide a detailed explanation in compliance with 37 CFR 1.111(b) and (c) of how ***each of*** the claims of the instant application (i.e. claim 1) is patentable over the references (identified above), **or 2)** to provide a explicit statement on the record that the most closely related references are only those newly cited references herein (i.e. provided with the instant petition) **<u>to the exclusion</u>** of the first two most closely related references (cited previously and noted above). Correction is required.

With regard to the requirement of MPEP § 708.02(a)(I.)(I)(4) and item 6.4 above, the concise statement of the utility provided in the instant petition (item 9D) ***must be of the invention as defined in the independent claim***. The statement provided in the instant petition references "claims 1 and 2", however only method claim 1 is pending in the instant application. Clarity is required.

With respect to the requirement of MPEP § 708.02(a)(I.)(I)(5) and item 6.5 above, Petitioner fails to identify where each limitation <u>of the</u> <u>instant</u> <u>claims</u> finds support under 35 USC 112, first paragraph, in the written description of the specification. Support for each limitation of each pending claim must be properly identified (by page, line or paragraph and/or figure). Specifically, reference is made to Petitioner's ***general*** allegation that support in the disclosure under 35 USC 112, first paragraph, is found in at least in the specification ... and at least in drawing figures. MPEP 2162 is reproduced below:

> **2162 Policy Underlying 35 U.S.C. 112, First Paragraph**
> To obtain a valid patent, a patent application must be filed that contains a full and clear disclosure of the invention in the manner prescribed by 35 U.S.C. 112, first paragraph. The requirement for an adequate disclosure ensures that the public receives something in return for the exclusionary rights that are granted to the inventor by a patent. The grant of

> a patent helps to foster and enhance the development and disclosure of new ideas and the advancement of scientific knowledge. Upon the grant of a patent in the U.S., information contained in the patent becomes a part of the information available to the public for further research and development, subject only to the patentee's right to exclude others during the life of the patent.
> In exchange for the patent rights granted, 35 U.S.C. 112, first paragraph, sets forth the minimum requirements for the quality and quantity of information that must be contained
>
> in the patent to justify the grant. As discussed in more detail below, the patentee must disclose in the patent sufficient information to put the public in possession of the invention and to enable those skilled in the art to make and use the invention. The applicant must not conceal from the public the best way of practicing the invention that was known to the patentee at the time of filing the patent application. Failure to fully comply with the disclosure requirements could result in the denial of a patent, or in a holding of invalidity of an issued patent.

The requirement of MPEP § 708.02(a)(I.)(I)(5) and item II. 6.5 above clearly states that the petitioner is required to **specifically identify corresponding elements in the figures** and **specifically identify where the corresponding written description in the cited portions of the instant specification** can find support under 35 U.S.C. § 112, first paragraph **for each limitation of claim 1**. A review of item 9E in the instant petition reveals that referenced paragraphs for support of the instant claims does not appear to be consistent with the claim language. For instance, the claim preamble and the step of "delivering output ..." appear to be supported in the specification at para. [0015] rather than "[0014]" as identified, the step of "delivering a JTAG control signal ..." appears to be supported at para. [0016] rather than at para. "[0015]" as identified, etc.

It is pointed out that the written description requirement has several policy objectives. The essential goal of the description of the invention requirement is to clearly convey the information that an applicant has invented the subject matter which is claimed. Another objective is to put the examiner in possession of what the applicant claims as the invention – the written description requirement implements the principle that a patent application must describe the technology that is sought to be patented; the requirement serves both to satisfy the inventor's obligation to disclose the technologic knowledge upon which the application is based and to demonstrate that the applicants were in possession of the invention that is claimed. Further, the written description requirement promotes the progress of expedite examination by ensuring that applicants adequately describe their inventions in sufficient detail in their applications in exchange for the right to take-up out of order of examination. Thus, a general statement that all limitations of claim(s) can be found by pointing to the specification having a verbatim of the claim language cannot be accepted to satisfy such a requirement of MPEP § 708.02(a)(I.)(I)(5) and item II. 6.5 above.

Clarification and identification of support for each limitation in the claim is required.

This application currently **Claims Priority from U.S. patent application 11/939,751, filed 11/14/2007.** In accordance with the requirements of this rule, if the application claims the benefit of one or more applications, the showing (above) item II. 6.5 **must** also include where each limitation of the claims finds support under the first paragraph of 35 USC 112 in each such application in which such support exists [**emphasis added**].

Thus, the petition does not meet the conditions II. 6.3 - 6.5 above.

DECISION

For the above-stated reasons, the petition is **DISMISSED**. The application will therefore be taken up by the examiner for action in its regular turn.

Petitioner is given a single opportunity to perfect the petition. Any request for reconsideration of this decision must be submitted within 1 (one) month or 30 (thirty) days, whichever is longer, (no extension of time under 37 CFR 1.136(a)) from the date of this decision in order to be considered timely. Any request for reconsideration must address the deficiencies indicated above.

Petitioner is reminded that, upon granting of the special status of the application on request for reconsideration, the application will be processed expeditiously. However, due to the dismissal of the instant petition, examination may not be completed within twelve months of the filing date of the application.

Any inquiry regarding this decision should be directed to Brian Johnson, Quality Assurance Specialist, at (571) 272-3595. If attempts to reach the undersigned by telephone are unsuccessful, Kakali Chaki, Quality Assurance Specialist, can be reached at (571) 272-3719.

Brian L. Johnson
Quality Assurance Specialist, WG 2110
Technology Center 2100

UNITED STATES PATENT AND TRADEMARK OFFICE

UNITED STATES DEPARTMENT OF COMMERCE
United States Patent and Trademark Office
Address: COMMISSIONER FOR PATENTS
P.O. Box 1450
Alexandria, Virginia 22313-1450
www.uspto.gov

APPLICATION NO.	FILING DATE	FIRST NAMED INVENTOR	ATTORNEY DOCKET NO.	CONFIRMATION NO.
12/189,304	08/11/2008	Harry I. Linzer	RPS920070201US2	6760

59369 7590 03/12/2009
CANTOR COLBURN LLP - IBM RESEARCH TRIANGLE PARK
20 Church Street
22nd Floor
Hartford, CT 06103

EXAMINER
BADERMAN, SCOTT T

ART UNIT	PAPER NUMBER
2114	

NOTIFICATION DATE	DELIVERY MODE
03/12/2009	ELECTRONIC

Please find below and/or attached an Office communication concerning this application or proceeding.

The time period for reply, if any, is set in the attached communication.

Notice of the Office communication was sent electronically on above-indicated "Notification Date" to the following e-mail address(es):

usptopatentmail@cantorcolburn.com

UNITED STATES PATENT AND TRADEMARK OFFICE

Commissioner for Patents
United States Patent and Trademark Office
P.O. Box 1450
Alexandria, VA 22313-1450
www.uspto.gov

11/13/2008

CANTOR COLBURN LLP-IBM
RESEARCH TRIANGLE PARK
20 CHURCH STREET
22ND FLOOR
HARTFORD, CT 06103

In re Application of: Harry I. LINZER
Serial No.: 12/189,304
Filed: August 11, 2008
Docket: RPS920070201US2

Title: METHODS FOR THE SUPPORT OF JTAG FOR SOURCE SYNCHRONOUS INTERFACES

DECISION ON PETITION TO MAKE SPECIAL FOR NEW APPLICATION UNDER 37 C.F.R. § 1.102 & M.P.E.P. § 708.02

This is a decision on the renewed petition filed on February 27, 2009 to make the above-identified application special for accelerated examination procedure under 37 C.F.R. § 1.102(d). The original petition, submitted on August 11, 2008 was dismissed in the decision mailed on January 30, 2009.

Note, in a telephone conversation on March 9, 2009 with Attorney John Sweet, it was pointed out that the instant petition lacked a showing under item II 6.5 (first para. of 35 USC 112) for priority application SN 11/939,751 filed November 14, 2007, from which the instant application is a continuation thereof. However, a showing of support under 35 USC 112, first paragraph in application SN 11/939,751 can be readily found by reference to section V. of the instant AE Support Document by merely subtracting one (-1) from the paragraphs identified herein (page 6). Therefore, this requirement (as identified in the previous petition dismissal of January 30, 2009) is considered to have been met.

Accordingly, the petition to make the application special is **GRANTED**.

The application is eligible for accelerated examination and the petition complies with the conditions for granting the application special status pursuant to the "Change to Practice for Petitions in Patent Applications to Make Special and for Accelerated Examination" published June 26, 2006, in the Federal Register. (71 Fed. Reg. 36323).

The prosecution of the instant application will be conducted expeditiously according to the following guidelines.

1. The application will be docketed to an examiner and taken up for action within two weeks of the date of this decision.

2. Restriction Practice:
   If the examiner determines that the claims are not directed to a single invention, a telephone request to elect one single invention will be made pursuant to MPEP 812.01. As a prerequisite to the grant of this petition, the applicant has agreed to make an oral election, by telephone, without traverse. If the applicant refuses to make an election without traverse, or the examiner cannot reach the applicant after a reasonable effort, the examiner will treat the first claimed invention (invention defined by claim 1) as having being constructively elected without traverse for examination.

3. Office action:
   If it is determined that, after appropriate consultation, there is a potential rejection or any other issue to be addressed, the examiner will telephone the applicant and arrange an interview to discuss and resolve the issue. An Office action, other than a Notice of Allowance and Fee(s) Due (Notice of Allowance), will not be issued unless either: 1) an interview was conducted but did not result in agreed to action that places the application in condition for allowance, or, 2) a determination is made that an interview would be unlikely to result in the application being placed in condition for allowance, and 3) an internal conference has been held to review any rejection of any claim.

4. Time for Reply:
   An Office action other than a Notice of Allowance or a final Office action will set a shortened statutory period of one month or thirty days, whichever is longer, for reply with no extension of time available under 37 CFR 1.136(a). Failure to timely file a reply within this non-extendible period for reply will result in the abandonment of the application.

5. Reply by Applicant:
   A timely reply to an Office action other than the Notice of Allowance must be submitted electronically via EFS or EFS-web and limited to addressing the rejections, objections and requirement made. Any amendment that attempts to: 1) add claims which would result in more than three pending independent claims or more than twenty pending total claims; 2) present claims not encompassed by the pre-examination search or an updated accelerated examination support document; or 3) present claims that are directed a non-elected invention or an invention other than that previously claimed and examined in the application, will be treated as not fully responsive and will not be entered.

   For any amendment to the claims (including any new claim) that is not encompassed by the accelerated examination support document, applicant must provide an updated accelerated examination support document that encompasses the amended or new claims at the time of filing of the amendment.

   To proceed expeditiously with the examination, it is recommended that a reply with amendments made to any claim or with any new claim being added be accompanied by an updated accelerated examination support document or a statement explaining how the amended or new claim is supported by the original accelerated examination support document.

6. Information Disclosure Statement (IDS):
   Any IDS filed during prosecution must be submitted electronically via EFS or EFS-web, accompanied by an updated accelerated examination support document, and be in compliance with 37 CFR 1.97 and 1.98.

7. Post-Allowance Processing:
   To expedite processing of the allowed application into a patent, the applicant must: 1) pay the required fees within one month of the date of the Notice of Allowance, and 2) not file any post allowance papers not required by the Office. In no event may the issue fee be paid and accepted later than three months from the date of the Notice of Allowance.

8. After-Final and Appeal Procedures:
   To expedite prosecution, after receiving the final Office action, applicant must: 1) promptly file a notice of appeal, an appeal brief and appeal fees; and 2) not request a pre-appeal brief conference.

   Any amendment, affidavit or other evidence filed after final Office action must comply with applicable rules and the requirements outlined in numbered paragraphs 5 and 6 above.

   On appeal, the application will proceed according to normal appeal procedures. After appeal, the application will again be treated special.

9. Proceedings Outside the Normal Examination Process:
   If the application becomes involved in a proceeding that is outside the normal examination process (e.g., a secrecy order, national security review, interference proceeding, petitions under 37 CFR 1.181, 182 or 183), the application will be treated special before and after such proceeding.

10. Final Disposition:
    The twelve-month goal of this accelerated examination procedure ends with a final disposition. The mailing of a final Office action, a Notice of Allowance, the filing of a Notice of Appeal, or the filing of a Request for Continued Examination (RCE) is the final disposition.

If, during prosecution, a paper is not filed electronically using EFS-web, a reply is filed but is not fully responsive, the application is involved in an appeal, or a proceeding outside normal examination process, the application will still be examined expeditiously, however, the final disposition may occur more than twelve months from the filing of the application. In addition, Applicant is reminded that due to the dismissal of the previous petition submission, examination may not be completed within twelve months of the filing date of the application.

Any inquiry regarding this decision should be directed to Brian Johnson, Quality Assurance Specialist, at (571) 272-3595. If attempts to reach the undersigned by telephone are unsuccessful, Kakali Chaki, Quality Assurance Specialist, can be reached at (571) 272-3719.

Brian Johnson, WQAS 2110
Technology Center 2100
Computer Architecture, Software and Information Security

UNITED STATES PATENT AND TRADEMARK OFFICE

Commissioner for Patents
United States Patent and Trademark Office
P.O. Box 1450
Alexandria, VA 22313-1450
www.uspto.gov

LYNDA L. MOYER
900 TAPADERO ROAD
BAILEY CO 80421

MAILED

JUN 29 2009

OFFICE OF PETITIONS

ON PETITION

In re Application of	:	
Lynda Moyers	:	
Application No. 12/189,322	:	
Filed: August 11, 2008	:	
Attorney Docket No. LM-Applicator	:	

This is a decision on the petition under 37 CFR 1.137(b), filed May 26, 2009, to revive the above-identified application.

The petition is **GRANTED**.

The application became abandoned for failure to reply in a timely manner to the Notice to File Corrected Application Papers, mailed August 22, 2008. The Notice set a period for reply of two (2) months from the mail date of the Notice. No extensions of time under the provisions of 37 CFR 1.136(a) were obtained. Accordingly, the application became abandoned on October 23, 2008. The Notice of Abandonment was mailed April 24, 2009.

The petition satisfies the requirements of 37 CFR 1.137(b) in that petitioner has supplied (1) the reply in the form of replacement drawings; (2) the petition fee of $810; and (3) an adequate statement of unintentional delay.

Telephone inquiries concerning this decision should be directed to Terri Williams at (571) 272-2991.

The application file is being referred to the Office of Patent Application Processing for further processing.

Chris Bottorff
Petitions Examiner
Office of Petitions

UNITED STATES PATENT AND TRADEMARK OFFICE

Commissioner for Patents
United States Patent and Trademark Office
P.O. Box 1450
Alexandria, VA 22313-1450
www.uspto.gov

Mr. Walter J. Tencza, Jr.
100 Menlo Park, Suite 210
Edison, NJ 08837

COPY MAILED

SEP 03 2008

OFFICE OF PETITIONS

In re Application of	:	
John A. Fedor	:	
Application No. 12/189,343	:	DECISION ON PETITION
Filed: August 11, 2008	:	TO MAKE SPECIAL UNDER
Attorney Docket No. Fedor-John-1	:	37 CFR 1.102(c)(1)
	:	

This is a decision on the petition under 37 CFR 1.102(c)(1), filed August 11, 2008, to make the above-identified application special based on applicant's age as set forth in M.P.E.P. § 708.02, Section IV.

The petition is **GRANTED**.

A grantable petition to make an application special under 37 CFR 1.102(c)(1) and MPEP § 708.02, Section IV: Applicant's Age must be accompanied by evidence showing that at least one of the applicants is 65 years of age, or more, such as a birth certificate or a statement by applicant. No fee is required

The instant petition includes a statement by the attorney of record and a photocopy of applicant's driver's license. Accordingly, the above-identified application has been accorded "special" status.

Telephone inquiries concerning this decision should be directed to Kimberly Inabinet at 571-272-4618.

All other inquiries concerning either the examination or status of the application should be directed to the Technology Center.

Upon completion of the pre-examination processing by the Office of Patent Application Processing, this application will be referred to Technology Center Art Unit 3724 for action on the merits commensurate with this decision.

Kimberly Inabinet
Petitions Examiner
Office of Petitions

UNITED STATES PATENT AND TRADEMARK OFFICE

UNITED STATES DEPARTMENT OF COMMERCE
United States Patent and Trademark Office
Address: COMMISSIONER FOR PATENTS
P.O. Box 1450
Alexandria, Virginia 22313-1450
www.uspto.gov

APPLICATION NO.	FILING DATE	FIRST NAMED INVENTOR	ATTORNEY DOCKET NO.	CONFIRMATION NO.
12/189,428	08/11/2008	Pun Jae CHOI	069576-0397	7014

20277 7590 04/14/2010
MCDERMOTT WILL & EMERY LLP
600 13TH STREET, N.W.
WASHINGTON, DC 20005-3096

EXAMINER
SEFER, AHMED N

ART UNIT	PAPER NUMBER
2893	

MAIL DATE	DELIVERY MODE
04/14/2010	PAPER

Please find below and/or attached an Office communication concerning this application or proceeding.

The time period for reply, if any, is set in the attached communication.

UNITED STATES PATENT AND TRADEMARK OFFICE

Commissioner for Patents
United States Patent and Trademark Office
P.O. Box 1450
Alexandria, VA 22313-1450
www.uspto.gov

MCDERMOTT WILL & EMERY LLP
600 13TH STREET, N.W.
WASHINGTON DC 20005-3096

In re Application of	
CHOI et al	
Application No.: 12/189,428	**: DECISION ON REQUEST TO**
Filed: 11 August 2008	**: PARTICIPATE IN THE PATENT**
Attorney Docket No. : 069576-0397	**: PROSECUTION HIGHWAY**
For: SEMICONDUCTOR LIGHT	**: PROGRAM AND PETITION**
EMITTING DEVICE, METHOD OF	**: TO MAKE SPECIAL UNDER**
MANUFACTURING THE SAME...	**: 37 CFR 1.102(d)**

This is a decision on the request to participate in the Patent Prosecution Highway (PPH) program and the petition under 37 CFR 1.102(d), filed 25 March 2010, to make the above-identified application special.

The request and petition are **Granted**.

Discussion

A grantable request to participate in the PPH program and petition to make special require:

1. The U.S. application is

    a. a Paris Convention application which either
        i. validly claims priority under 35 U.S.C. 119(a) and 37 CFR 1.55 to one or more applications filed in the KIPO, or
        ii. validly claims priority under 35 U.S.C. 119(a)/365(a) to a PCT application that contains no priority claims,

    or

    b. a national stage application under the PCT (an application which entered the national stage in the U.S. from a PCT international application after compliance with 35 U.S.C. 371), which PCT application
        i. validly claims priority under 35 U.S.C. 365(b) to an application filed in the KIPO, or
        ii. validly claims priority under 35 U.S.C. 365(b) to a PCT application that contains no priority claims, or
        iii. contains no priority claim,

    or

    c. a so-called bypass application filed under 35 U.S.C. 111(a) which validly claims benefit under 35 U.S.C. 120 to a PCT application, which PCT application

i. validly claims priority under 35 U.S.C. 365(b) to an application filed in the KIPO, or
ii. validly claims priority under 35 U.S.C. 365(b) to a PCT application that contains no priority claims, or
iii. contains no priority claim;

2. Applicant must submit a copy of:
   a. The allowable/patentable claim(s) from the KR application(s);
   b. An English translation of the allowable/patentable claim(s), and
   c. A statement that the English translation is accurate (if the claims were published in a language other than English);
3. Applicant must:
   a. Ensure that all the claims in the U.S. application must sufficiently correspond or be amended to sufficiently correspond to the allowable/patentable claim(s) in the KR application(s), and
   b. Submit a claims correspondence table in English;
4. Examination of the U.S. application has not begun;
5. Applicant must submit:
   a. A copy of all the office actions (which are relevant to patentability), excluding "Decision to Grant a Patent" from each of the KR application(s) containing the allowable/patentable claim(s);
   b. An English language translation of the KIPO office action; and
   c. A statement that the English translation is accurate (if the office actions are not in the English language);
6. Applicant must submit:
   a. An IDS listing the documents cited by the KIPO examiner in the KIPO office action (unless already filed in this application); and
   b. Copies of all the documents cited in the KIPO office action, except U.S. patents or U.S. patent application publications (unless already filed in this application);
7. A required petition fee under 37 CFR 1.17(h).

The request to participate in the PPH program and petition comply with the above requirements. Accordingly, the above-identified application has been accorded "special" status.

Any response must be submitted via EFS-Web.

Telephone inquiries concerning this decision should be directed to Lee W. Young at 571-272-4549.

All other inquiries concerning the examination or status of the application is accessible in the PAIR system at http://uspto.gov/ebc/index.html.

Lee W. Young
TQAS
Technology Center 2800

UNITED STATES PATENT AND TRADEMARK OFFICE

Commissioner for Patents
United States Patent and Trademark Office
P.O. Box 1450
Alexandria, VA 22313-1450
www.uspto.gov

MAILED

JUN 0 1 2010

OFFICE OF PETITIONS

LATHROP & GAGE LLP
4845 PEARL EAST CIRCLE
SUITE 201
BOULDER CO 80301

In re Application of	:	
RAJOPADHYE, Sanjay et al.	:	
Application No. 12/189,493	:	DECISION ON PETITION
Filed: August 11, 2008	:	TO WITHDRAW
Attorney Docket No. **480980**	:	FROM RECORD
	:	

This is a decision on the Request to Withdraw as attorney or agent of record under 37 C.F.R. § 1.36(b), filed April 16, 2010.

The request is **NOT APPROVED.**

The Office will no longer accept address changes to a new practitioner or law firm filed with a Request, absent the filing of a power of attorney to the new representative. The Office will either change the correspondence address of record to the most current address information provided for the assignee of the entire interest who properly became of record under 37 CFR 3.71 or, if no assignee of the entire interest has properly been made of record under 37 CFR 3.71, the most current address information provided for the first named inventor.

Accordingly, the request to withdraw from record cannot be approved because the request to change the correspondence address is not that of: (1) the first named inventor; or (2) an assignee of the entire interest under 37 C.F.R 3.71 who has properly intervened.

If an assignee has intervened in this application, then a Statement under 37 CFR 3.73(b) or a copy of the actual assignment must be submitted with a renewed request.

All future communications from the Office will continue to be directed to the above-identified address until otherwise properly notified.

Telephone inquiries concerning this decision should be directed to the undersigned at 571-272-4618.

/Tredelle D. Jackson/

Tredelle D. Jackson
Paralegal Specialist
Office of Petitions

UNITED STATES PATENT AND TRADEMARK OFFICE

Commissioner for Patents
United States Patent and Trademark Office
P.O. Box 1450
Alexandria, VA 22313-1450
www.uspto.gov

MAIL

DEC 23 2008

DIRECTOR'S OFFICE
TECHNOLOGY CENTER 2600

FOLEY & LARDNER LLP
150 EAST GILMAN STREET
P.O. BOX 1497
MADISON WI 53701-1497

In re Application of:
MYERS, THEODORE J.
Serial No.: 12/189,505
Filed: August 11, 2008
Attorney Docket number: **091721-0106**
Title: **TAG COMMUNICATIONS WITH ACCESS POINT**

DECISION ON PETITION TO MAKE SPECIAL FOR NEW APPLICATION UNDER 37 C.F.R. § 1.102 & M.P.E.P. § 708.02

This is a decision on the petition filed on August 11, 2008 to make the above-identified application special for accelerated examination procedure under 37 C.F.R. § 1.102(d).

The petition to make the application special is **DISMISSED**.

REGULATION AND PRACTICE

A grantable petition to make special under 37 C.F.R. § 1.102(d) and pursuant to the "Change to Practice for Petitions in Patent Applications to Make Special and for Accelerated Examination" published in the Federal Register on June 26, 2006 (71 Fed. Reg. 36323), must satisfy the following conditions:

I. Conditions Regarding the Application:

1. the application must be a non-reissue utility or design application filed under 37 CFR 1.111(a);
2. the application, the petition and the required fees must be filed electronically using the USPTO's electronic filing system (EFS), or EFS-web; if not filed electronically, a statement asserting that EFS and EFS-web were not available during the normal business hours.
3. at the time of filing, the application must be complete under 37 CFR 1.51 and in condition for examination;
4. the application must contain three or fewer independent claims and twenty or fewer total claims and the claims must be directed to a single invention.

II. Conditions Regarding the Petition:

The petition must:

1. be filed with the application;

2. include a statement that applicant agrees not to separately argue the patentability of any independent claim during any appeal in the application;

3. include a statement that applicant agrees to make an election without traverse in a telephone interview.

4. include a statement that applicant agrees to conduct such an interview when requested by the examiner.

5. include a statement, made based on a good faith belief, that a preexamination search in compliance with the following requirements, was conducted, including an identification of the filed of search by United States class and subclass, where applicable, and for database searches, the search logic or chemical structure or sequence used as a query, the name of the file(s) searched and the database service, and the date of the search.

The preexamination search must:

5.1 involve U.S. patents and patent application publications, foreign patent documents, and non-patent literature, unless the applicant can justify with reasonable certainty that no references more pertinent than those already identified are likely to be found in the eliminated sources and includes such a justification with this statement;

5.2. be directed to the claimed invention and encompass all of the features of the claims, giving the claims the broadest reasonable interpretation;

5.3. encompass the disclosed features that may be claimed.

6. must provide in support of the petition an accelerated examination support document.

An accelerated examination support document must include:

6.1. an information disclosure statement (IDS) in compliance with 37 CFR 1.98 citing each reference deemed most closely related to the subject matter of each of the claims;

6.2. an identification of all the limitations in the claims that are disclosed by the reference specifying where the limitation is disclosed in the cited reference;

6.3. a detailed explanation of how each of the claims are patentable over the references cited with particularity required by 37 CFR 1.111(b) and (c);

6.4. a concise statement of the utility of the invention as defined in each of the independent claims (unless the application is a design application);

6.5. a showing of where each limitation of the claims finds support under 35 USC 112, first paragraph, in the written description of the specification. If applicable, the showing must also identify: (1) each means- (or step) plus-function claim element that invokes consideration under 35 USC 112, sixth paragraph; and (2) the structure, material, or acts in the specification that corresponds to each means- (or step) plus-function claim element that invokes consideration under 35 USC 112, sixth paragraph; if the application claims the benefit of one or more applications under title 35, United States Code, the showing must also include where each limitation of the claims finds support under 35 USC 112, first paragraph, in each such application in which such supports exists;

6.6. an identification of any cited references that may be disqualified under 35 USC 103(c).

REVIEW OF FACTS

The conditions set forth under section I. above are considered to have been met. However, the petition fails to comply with conditions set forth under section II, items 5.2, 5.3, 6.3 and 6.5.

For these reasons cited above, the petition fails to meet the required conditions to be accorded special status under the accelerated examination procedure.

Regarding the requirement in items 5.2 and 5.3 above, the preexamination search document provided with the instant petition is deficient as follows:

The US field of search and database searches which are to be provided under section 8(A) are not sufficient. In addition to the search areas provided, applicant would also need to search in the following class/subclasses: 375/147, 375/148.

If any request for reconsideration is filed, an updated preexamination search must be conducted as per item 5.1 above, and the Preexamination Search Document must be amended to indicate such; a new Information Disclosure Statement should be filed to cite any newly found prior art, and the Accelerated Examination Support Document must also be amended to include the necessary reference and discussion of any newly found and cited prior art in accordance with all of items 6 through 6.6 above.

Regarding the requirement in item 6.3 above, the Accelerated Examination Support Document is deficient because the section titled "Detailed Explanation of Patentability" fails to provide a "detailed explanation of how the claim is patentable over each of the references cited with particularity required by 37 CFR 1.111(b) and (c). In Section 9(C), petitioner identifies claim limitations that all of the references fail to teach or suggest "determining where a frame starts using cyclic redundancy checking" as in claims 1, 8 or 15. However, the limitation of "... using cyclic redundancy checking..." is not recited in the claims identified, thus is unclear as to how the claim is patentable over cited references alone or in combination required by 37 CFR 1.111(b) and (c).

Regarding the requirement in item 6.5 above, the "Accelerated Examination Support Document", is deficient because section 9(F) fails to include a showing of where ***each limitation of each of the claims*** finds support under the first paragraph of 35 USC 112 in the written description of the application claims the benefit of one or more applications under title 35, United States Code, the showing must also include where each limitation of the claims finds support under 35 USC 112, first paragraph, in each such application in which such supports exists.
Petitioner claims priority to U.S. Provisional Application No. 61/037,522 without providing any indication of a showing where <u>each specific claim limitation</u> finds support in the written description of the specification for each of the claims. Therefore, an updated accelerated examination support document must be provided which shows where each limitation of the claims finds support in this benefit application.

DECISION

For the above-stated reasons, the petition is **<u>dismissed</u>**. The application will therefore be taken up by the examiner for action in its regular turn.

Petitioner is given a single opportunity to perfect the petition. Any request for reconsideration of this decision must be submitted within 1 (one) month or 30 (thirty) days, whichever is longer, (no extension of time under 37 CFR 1.136(a)) from the date of this decision in order to be considered timely. Any request for reconsideration must address the deficiencies indicated above.

Petitioner is reminded that, upon granting of the special status of the application on request for reconsideration, the application will be processed expeditiously. However, due to the dismissal of the

instant petition, examination may not be completed within twelve months of the filing date of the application.

Any inquiry regarding this decision should be directed to Ken Wieder, Quality Assurance Specialist, at (571) 272-2986.

Kenneth A. Wieder
Quality Assurance Specialist
Technology Center 2600
Communications

UNITED STATES PATENT AND TRADEMARK OFFICE

Commissioner for Patents
United States Patent and Trademark Office
P.O. Box 1450
Alexandria, VA 22313-1450
www.uspto.gov

MAIL

FEB 12 2009

DIRECTOR'S OFFICE
TECHNOLOGY CENTER 2600

FOLEY & LARDNER LLP
150 EAST GILMAN STREET
P.O. BOX 1497
MADISON WI 53701-1497

In re Application of: MYERS, THEODORE J. Serial No.: 12/189,505 Filed: August 11, 2008 Title: **TAG COMMUNICATIONS WITH ACCESS POINT**	DECISION ON PETITION TO MAKE SPECIAL FOR NEW APPLICATION UNDER 37 C.F.R. § 1.102 & M.P.E.P. § 708.02

The petition to make the application special is **GRANTED**.

The application is eligible for accelerated examination and the petition complies with the conditions for granting the application special status pursuant to the "Change to Practice for Petitions in Patent Applications to Make Special and for Accelerated Examination" published June 26, 2006, in the Federal Register. (71 Fed. Reg. 36323).

The prosecution of the instant application will be conducted expeditiously according to the following guidelines.

1. The application will be docketed to an examiner and taken up for action within two weeks of the date of this decision.

2. Restriction Practice:
   If the examiner determines that the claims are not directed to a single invention, a telephone request to elect one single invention will be made pursuant to MPEP 812.01. As a prerequisite to the grant of this petition, the applicant has agreed to make an oral election, by telephone, without traverse. If the applicant refuses to make an election without traverse, or the examiner cannot reach the applicant after a reasonable effort, the examiner will treat the first claimed invention (invention defined by claim 1) as having being constructively elected without traverse for examination.

3. Office action:
   If it is determined that, after appropriate consultation, there is a potential rejection or any other issue to be addressed, the examiner will telephone the applicant and arrange an interview to discuss and resolve the issue. An Office action, other than a Notice of

Allowance and Fee(s) Due (Notice of Allowance), will not be issued unless either: 1) an interview was conducted but did not result in agreed to action that places the application in condition for allowance, or, 2) a determination is made that an interview would be unlikely to result in the application being placed in condition for allowance, and 3) an internal conference has been held to review any rejection of any claim.

4. Time for Reply:
An Office action other than a Notice of Allowance or a final Office action will set a shortened statutory period of one month or thirty days, whichever is longer, for reply with no extension of time available under 37 CFR 1.136(a). Failure to timely file a reply within this non-extendible period for reply will result in the abandonment of the application.

5. Reply by Applicant:
A timely reply to an Office action other than the Notice of Allowance must be submitted electronically via EFS or EFS-web and limited to addressing the rejections, objections and requirement made. Any amendment that attempts to: 1) add claims which would result in more than three pending independent claims or more than twenty pending total claims; 2) present claims not encompassed by the pre-examination search or an updated accelerated examination support document; or 3) present claims that are directed a non-elected invention or an invention other than that previously claimed and examined in the application, will be treated as not fully responsive and will not be entered.

   For any amendment to the claims (including any new claim) that is not encompassed by the accelerated examination support document, applicant must provide an updated accelerated examination support document that encompasses the amended or new claims at the time of filing of the amendment.

   To proceed expeditiously with the examination, it is recommended that a reply with amendments made to any claim or with any new claim being added be accompanied by an updated accelerated examination support document or a statement explaining how the amended or new claim is supported by the original accelerated examination support document.

6. Information Disclosure Statement (IDS):
Any IDS filed during prosecution must be submitted electronically via EFS or EFS-web, accompanied by an updated accelerated examination support document, and be in compliance with 37 CFR 1.97 and 1.98.

7. Post-Allowance Processing:
To expedite processing of the allowed application into a patent, the applicant must: 1) pay the required fees within one month of the date of the Notice of Allowance, and 2) not file any post allowance papers not required by the Office. In no event may the issue fee be paid and accepted later than three months from the date of the Notice of Allowance.

8. After-Final and Appeal Procedures:

To expedite prosecution, after receiving the final Office action, applicant must: 1) promptly file a notice of appeal, an appeal brief and appeal fees; and 2) not request a pre-appeal brief conference.

Any amendment, affidavit or other evidence filed after final Office action must comply with applicable rules and the requirements outlined in numbered paragraphs 5 and 6 above.

On appeal, the application will proceed according to normal appeal procedures. After appeal, the application will again be treated special.

9. Proceedings Outside the Normal Examination Process:
   If the application becomes involved in a proceeding that is outside the normal examination process (e.g., a secrecy order, national security review, interference proceeding, petitions under 37 CFR 1.181, 182 or 183), the application will be treated special before and after such proceeding.

10. Final Disposition:
    The twelve month goal of this accelerated examination procedure ends with a final disposition. The mailing of a final Office action, a Notice of Allowance, the filing of a Notice of Appeal, or the filing of a Request for Continued Examination (RCE) is the final disposition.

If, during prosecution, a paper is not filed electronically using EFS-web, a reply is filed but is not fully responsive, the application is involved in an appeal, or a proceeding outside normal examination process, the application will still be examined expeditiously, however, the final disposition may occur more than twelve months from the filing of the application.

Any inquiry regarding this decision should be directed to Ken Wieder, Quality Assurance Specialist, at (571) 272-2986.

Kenneth A. Wieder
Quality Assurance Specialist
Technology Center 2600 Communications

UNITED STATES PATENT AND TRADEMARK OFFICE

Commissioner for Patents
United States Patent and Trademark Office
P.O. Box 1450
Alexandria, VA 22313-1450
www.uspto.gov

GREENBERG TRAURIG, LLP
2101 L Street, N.W.
Suite 1000
Washington DC 20037

COPY MAILED

APR 07 2009

OFFICE OF PETITIONS

In re Application of
Messinger, et al.
Application No.: 12/189,514
Filed: August 11, 2008
Attorney Docket No.: 104084.010101

ON PETITION

This is a decision on the petition under 37 CFR 1.47(a), filed March 23, 2009.

The petition is **DISMISSED**.

Any request for reconsideration of this decision must be submitted within TWO (2) MONTHS from the mail date of this decision. Extensions of time under 37 CFR 1.136(a) are permitted. Any response should be entitled "Request for Reconsideration of Petition Under 37 CFR 1.47(a)" and may include an oath or declaration executed by the inventor. **Failure to respond will result in abandonment of the application.**

A grantable petition under 37 CFR 1.47(a) requires:

(1) a petition including proof of the pertinent facts establishing that the joint inventor(s) refuses to join, or cannot be found or reached after diligent effort,
(2) a proper oath or Declaration executed by the available joint inventor(s),
(3) the petition fee of $200, and
(4) the last known address of the omitted inventor(s).

This petition lacks item (1) above.

As to item (1), applicant has failed to establish that the non-signing inventor, Mark Pomper, cannot be reached or has refused to sign the declaration.

The statement of facts of Richard E. Kurtz II establishes that the application and a declaration was received by an individual at Mr. Pomper's last known address on March 17, 2009. Contrary to the assertion in Mr. Kurtz' statement that the non-signing inventor had 10 days to return an executed declaration, the petition was filed on March 23, 2009, which is only 6 days after it was received at Mr. Pomper's last known address. Petitioner did not allow sufficient time for Mr.

Pomper to review the application. It is conceivable that Mr. Pomper was out of town during the short period given for review and execution of the declaration. As stated in MPEP 409.03(d), " The fact that a nonsigning inventor is on vacation or out of town and is therefore temporarily unavailable to sign the declaration is not an acceptable reason for filing under 37 CFR 1.47(a)."

Petitioner should engage in further efforts to contact Mr. Pomper (through mail or telephone) and obtain an executed declaration from him.

In order to obtain 47 status, petitioner must show Mr. Pomper's refusal, either express or constructive, to execute the declaration. When petitioner shows that Mr. Pomper either refused to sign the declaration or would not respond to the request that he sign the declaration within a reasonable amount of time, petitioner will have satisfied this requirement.

Any written refusal to sign the declaration should be included as documentary evidence in any reconsideration petition. If there is an oral refusal, the facts surrounding the refusal should be included in a declaration by a party with first hand knowledge of the refusal. If it is concluded by the 37 CFR 1.47 applicant that a non-signing inventor's conduct constitutes a refusal, all facts upon which that conclusion is based should be stated in an affidavit or declaration.

The affidavit or declaration of facts must be signed, where at all possible, by a person having *firsthand knowledge* of the facts recited therein. Statements based on hearsay will not normally be accepted. It is important that the affidavit or declaration contain statements of fact as opposed to conclusions.

Further correspondence with respect to this matter should be addressed as follows:

By mail: Mail Stop PETITION
Commissioner for Patents
Post Office Box 1450
Alexandria, VA 22313-1450

By hand: U.S. Patent and Trademark Office
Customer Service Window, Mail Stop Petition
Randolph Building
401 Dulany Street
Alexandria, VA 22314

By FAX: (571) 273-8300 - ATTN: Office of Petitions

Telephone inquiries should be directed to the undersigned at (571) 272-3230.

Shirene Willis Brantley
Senior Petitions Attorney
Office of Petitions

UNITED STATES PATENT AND TRADEMARK OFFICE

COMMISSIONER FOR PATENTS
UNITED STATES PATENT AND TRADEMARK OFFICE
P.O. BOX 1450
ALEXANDRIA, VA 22313-1450
www.uspto.gov

COPY MAILED

NOV 23 2009

OFFICE OF PETITIONS

GREENBERG TRAURIG, LLP
2101 L Street, N.W.
Suite 1000
Washington DC 20037

In re Application of	:	
Messinger, et al.	:	DECISION GRANTING
Application No.: 12/189,514	:	STATUS UNDER
Filed: August 11, 2008	:	37 CFR 1.47(a)
Attorney Docket No.: 104084.010101	:	

This is a decision on the renewed petition under 37 CFR 1.47(a), filed October 7, 2009.

The petition is **GRANTED**.

Petitioner has shown that the non-signing inventor, Mark Elliot Pomper, has constructively refused to join in the filing of the above-identified application.

The application and papers have been reviewed and found in compliance with 37 CFR 1.47(a). This application is hereby accorded Rule 1.47(a) status.

As provided in 37 CFR 1.47(c), this Office will forward notice of this application's filing to the non-signing inventor at the address given in the petition. Notice of the filing of this application will also be published in the Official Gazette.

This application is being referred to Technology Center AU 3612 for examination in due course.

Telephone inquiries should be directed to the undersigned at (571) 272-3230.

Shirene Willis Brantley
Senior Petitions Attorney
Office of Petitions

UNITED STATES PATENT AND TRADEMARK OFFICE

COMMISSIONER FOR PATENTS
UNITED STATES PATENT AND TRADEMARK OFFICE
P.O. BOX 1450
ALEXANDRIA, VA 22313-1450
www.uspto.gov

COPY MAILED

NOV 23 2009

OFFICE OF PETITIONS

MARK ELLIOT POMPER
505 W. 47TH STREET
MIAMI BEACH FL 33140

In re Application of	:	
Messinger, et al.	:	LETTER
Application No.: 12/189,514	:	
Filed: August 11, 2008	:	
Attorney Docket No.: 104084.010101	:	

Dear Mr. Pomper:

You are named as a joint inventor in the above-identified United States patent application, filed under the provisions of 35 U.S.C. 116 (United States Code), and 37 CFR 1.47(a), Rules of Practice in Patent Cases. Should a patent be granted on the application you will be designated therein as a joint inventor.

As a named inventor you are entitled to inspect any paper in the file wrapper of the application, order copies of all or any part thereof (at a prepaid cost per 37 CFR 1.19) or make your position of record in the application. Alternatively, you may arrange to do any of the preceding through a registered patent attorney or agent presenting written authorization from you. If you care to join the application, counsel of record (see below) would presumably assist you. Joining the application would entail the filing of an appropriate oath or declaration by you pursuant to 37 CFR 1.63.

Telephone inquiries regarding this communication should be directed to the undersigned at (571) 272-3230. Requests for information regarding your application should be directed to the File Information Unit at (703) 308-2733. Information regarding how to pay for and order a copy of the application, or a specific paper in the application, should be directed to the Certification Division at (571) 272-3150 or 1 (800) 972-6382 (outside the Washington, DC area).

Shirene Willis Brantley
Shirene Willis Brantley
Senior Petitions Attorney
Office of Petitions

Attorneys of Record: GREENBERG TRAURIG, LLP
2101 L Street, N.W.
Suite 1000
Washington DC 20037

UNITED STATES PATENT AND TRADEMARK OFFICE

Commissioner for Patents
United States Patent and Trademark Office
P.O. Box 1450
Alexandria, VA 22313-1450
www.uspto.gov

GRIFFIN & SZIPL, PC
SUITE PH-1
2300 NINTH STREET, SOUTH
ARLINGTON VA 22204

MAILED
JUL 06 2010
OFFICE OF PETITIONS

In re Application of	:	
TAUFIG, Ahmmed Ziah	:	
Application No. 12/189,515	:	DECISION ON PETITION
Filed: August 11, 2008	:	TO WITHDRAW
Attorney Docket No. **TERSMI0013**	:	FROM RECORD
	:	

This is a decision on the Request to Withdraw as attorney or agent of record under 37 C.F.R. § 1.36(b), filed June 10, 2010.

The request is **APPROVED**.

A grantable request to withdraw as attorney/agent of record must be signed by every attorney/agent seeking to withdraw or contain a clear indication that one attorney is signing on behalf of another/others. The Office requires the practitioner(s) requesting withdrawal to certify that he, she, or they have: (1) given reasonable notice to the client, prior to the expiration of the response period, that the practitioner(s) intends to withdraw from employment; (2) delivered to the client or a duly authorized representative of the client all papers and property (including funds) to which the client is entitled; and (3) notified the client of any responses that may be due and the time frame within which the client must respond, pursuant 37 CFR 10.40(c).

The request was signed by Joerg-Uwe Szipl on behalf of all attorneys of record who are associated with customer No. 24203. All attorneys/agents associated have been withdrawn. Applicant is reminded that there is no attorney of record at this time.

All future correspondence will be directed to the first named inventor Joerg-Uwe Szipl at the address indicated below.

There are no outstanding office actions at this time.

Telephone inquiries concerning this decision should be directed to the undersigned at 571-272-4231.

Michelle R. Eason
Paralegal Specialist
Office of Petitions

cc: **AHMMED ZIAH TAUFIG**
TURINER STR. 2
KOLN 50668 DE GERMANY

UNITED STATES PATENT AND TRADEMARK OFFICE

Commissioner for Patents
United States Patent and Trademark Office
P.O. Box 1450
Alexandria, VA 22313-1450
www.uspto.gov

MAIL

FEB 12 2009

DIRECTOR'S OFFICE
TECHNOLOGY CENTER 2600

FOLEY & LARDNER LLP
150 EAST GILMAN STREET
P.O. BOX 1497
MADISON WI 53701-1497

In re Application of: MYERS, THEODORE J. Serial No.: 12/189,533 Filed: August 11, 2008 Attorney Docket No.: 091721-0105 Title: **DESPREADING SPREAD SPECTRUM DATA**	DECISION ON PETITION TO MAKE SPECIAL FOR NEW APPLICATION UNDER 37 C.F.R. § 1.102 & M.P.E.P. § 708.02

This is a decision on the petition filed on August 11, 2008 to make the above-identified application special for accelerated examination procedure under 37 C.F.R. § 1.102(d).

The petition to make the application special is **DISMISSED**.

REGULATION AND PRACTICE

A grantable petition to make special under 37 C.F.R. § 1.102(d) and pursuant to the "Change to Practice for Petitions in Patent Applications to Make Special and for Accelerated Examination" published in the Federal Register on June 26, 2006 (71 Fed. Reg. 36323), must satisfy the following conditions:

I. Conditions Regarding the Application:

1. the application must be a non-reissue utility or design application filed under 37 CFR 1.111(a);

2. the application, the petition and the required fees must be filed electronically using the USPTO's electronic filing system (EFS), or EFS-web; if not filed electronically, a statement asserting that EFS and EFS-web were not available during the normal business hours.

3. at the time of filing, the application must be complete under 37 CFR 1.51 and in condition for examination;

4. the application must contain three or fewer independent claims and twenty or fewer total claims and the claims must be directed to a single invention.

II. Conditions Regarding the Petition:

The petition must:

1. be filed with the application;

2. include a statement that applicant agrees not to separately argue the patentability of any independent claim during any appeal in the application;

3. include a statement that applicant agrees to make an election without traverse in a telephone interview.

4. include a statement that applicant agrees to conduct such an interview when requested by the examiner.

5. include a statement, made based on a good faith belief, that a preexamination search in compliance with the following requirements, was conducted, including an identification of the filed of search by United States class and subclass, where applicable, and for database searches, the search logic or chemical structure or sequence used as a query, the name of the file(s) searched and the database service, and the date of the search.

The preexamination search must:

5.1 involve U.S. patents and patent application publications, foreign patent documents, and non-patent literature, unless the applicant can justify with reasonable certainty that no references more pertinent than those already identified are likely to be found in the eliminated sources and includes such a justification with this statement;

5.2. be directed to the claimed invention and encompass all of the features of the claims, giving the claims the broadest reasonable interpretation;

5.3. encompass the disclosed features that may be claimed.

6. must provide in support of the petition an accelerated examination support document.

An accelerated examination support document must include:

6.1. an information disclosure statement (IDS) in compliance with 37 CFR 1.98 citing each reference deemed most closely related to the subject matter of each of the claims;

6.2. an identification of all the limitations in the claims that are disclosed by the reference specifying where the limitation is disclosed in the cited reference;

6.3. a detailed explanation of how each of the claims are patentable over the references cited with particularity required by 37 CFR 1.111(b) and (c);

6.4. a concise statement of the utility of the invention as defined in each of the independent claims (unless the application is a design application);

6.5. a showing of where each limitation of the claims finds support under 35 USC 112, first paragraph, in the written description of the specification. If applicable, the showing must also identify: (1) each means- (or step) plus-function claim element that invokes consideration under 35 USC 112, sixth paragraph; and (2) the structure, material, or acts in the specification that corresponds to each means- (or step) plus-function claim element that invokes consideration under 35 USC 112, sixth paragraph; if the application claims the benefit of one or more applications under title 35, United States Code, the showing must also include where each limitation of the claims finds support under 35 USC 112, first paragraph, in each such application in which such supports exists;

6.6. an identification of any cited references that may be disqualified under 35 USC 103(c).

REVIEW OF FACTS

The conditions set forth under section I. above are considered to have been met. However, the petition fails to comply with conditions set forth under section II, items 5.2, 5.3, 6.1, 6.3 and 6.5.

For these reasons cited above, the petition fails to meet the required conditions to be accorded special status under the accelerated examination procedure.

Regarding the requirement in item 5.2 and 5.3 above, the preexamination search document provided with the instant petition is deficient as follows: The US field of search and database searches which are to be provided under section 8(A) are not sufficient. In addition to the search areas provided, applicant would also need to search the following class/subclasses:
375/141,145,147,149.

If any request for reconsideration is filed, an updated preexamination search must be conducted as per item 5.1 above, and the Preexamination Search Document must be amended to indicate such; a new Information Disclosure Statement should be filed to cite any newly found prior art, and the Accelerated Examination Support Document must also be amended to include the necessary reference and discussion of any newly found and cited prior art in accordance with all of items 6 through 6.6 above.

Regarding the requirement in item 6.1 above, the accelerated examination support document only discuss some of the references deemed most closely related to the subject matter of the claims. However, the IDS lists several additional references. All references (all of the references cited in the IDS) deemed most closely related to the subject matter of the claims must be discussed in the accelerated examination support document. *Therefore, any request for reconsideration must provide a detailed explanation in regard to the claims with respect to the other cited references as set forth in items 6.2 and 6.3 above or an explanation of why the references are no longer deemed most closely related.*

Regarding the requirement in item 6.3 above, the Accelerated Examination Support Document is deficient because the section titled "Detailed Explanation of Patentability" fails to provide a "detailed explanation of how *each* of the claims is patentable over *each* of the references cited with particularity required by 37 CFR 1.111(b) and (c)". In section 9(B) of the Accelerated Examination Support Document, petitioner identifies claim limitations that are taught by each reference individually without clearly identifying which limitations are specifically not taught by each reference. In Section 9(C), petitioner identifies claim limitations that all of the references fail to teach or suggest. However, the limitations identified in items 9(B) and 9(C) noted above are in some instances different from reference to reference, thus leading to confusion as to how the claims are patentable over *each* of the references cited with particularity required by 37 CFR 1.111(b) and (c). Furthermore, it fails to provide how each of the claims is patentable over the *combination* of the cited references. The petition merely repeats the claimed limitations and explains that the claims are patentably distinguished over each or combination of references cited. Clarification is required.

Regarding the requirement in item 6.5 above, the "Accelerated Examination Support Document", is deficient because section 9(F) fails to include a showing of where ***each limitation of each of the claims*** finds support under the first paragraph of 35 USC 112 in the written description of the application, but broadly describes support for the disclosure. Furthermore, the "Accelerated Examination Support Document", is deficient because section 9(F) fails to include a showing of where ***each limitation of each of the claims*** finds support under the first paragraph of 35 USC 112 in the written description of the U.S. Provisional Application No. 61/037,522. Therefore, an updated accelerated examination support document must be provided which shows where each limitation of each of the claims finds support in this application and in U.S. Provisional Application No. 61/037,522.

DECISION

For the above-stated reasons, the petition is **dismissed**. The application will therefore be taken up by the examiner for action in its regular turn.

Petitioner is given a single opportunity to perfect the petition. Any request for reconsideration of this decision must be submitted within 1 (one) month or 30 (thirty) days, whichever is longer, (no extension of time under 37 CFR 1.136(a)) from the date of this decision in order to be considered timely. Any request for reconsideration must address the deficiencies indicated above.

Petitioner is reminded that, upon granting of the special status of the application on request for reconsideration, the application will be processed expeditiously. However, due to the dismissal of the instant petition, examination may not be completed within twelve months of the filing date of the application.

Any inquiry regarding this decision should be directed to Ken Wieder, Quality Assurance Specialist, at (571) 272-2986.

Kenneth A. Wieder
Quality Assurance Specialist
Technology Center 2600
Communications

547 UNITED STATES PATENT AND TRADEMARK OFFICE

Commissioner for Patents
United States Patent and Trademark Office
P.O. Box 1450
Alexandria, VA 22313-1450
www.uspto.gov

MAIL

MAR 20 2009
DIRECTOR'S OFFICE
TECHNOLOGY CENTER 2600

FOLEY & LARDNER LLP
150 EAST GILMAN STREET
P.O. BOX 1497
MADISON WI 53701-1497

In re Application of: MYERS, THEODORE J. Serial No.: 12/189,533 Filed: August 11, 2008 Title: DESPREADING SPREAD SPECTRUM DATA	DECISION ON PETITION TO MAKE SPECIAL FOR NEW APPLICATION UNDER 37 C.F.R. § 1.102 & M.P.E.P. § 708.02

The petition to make the application special is **GRANTED**.

The application is eligible for accelerated examination and the petition complies with the conditions for granting the application special status pursuant to the "Change to Practice for Petitions in Patent Applications to Make Special and for Accelerated Examination" published June 26, 2006, in the Federal Register. (71 Fed. Reg. 36323).

The prosecution of the instant application will be conducted expeditiously according to the following guidelines.

1. The application will be docketed to an examiner and taken up for action within two weeks of the date of this decision.

2. Restriction Practice:
   If the examiner determines that the claims are not directed to a single invention, a telephone request to elect one single invention will be made pursuant to MPEP 812.01. As a prerequisite to the grant of this petition, the applicant has agreed to make an oral election, by telephone, without traverse. If the applicant refuses to make an election without traverse, or the examiner cannot reach the applicant after a reasonable effort, the examiner will treat the first claimed invention (invention defined by claim 1) as having being constructively elected without traverse for examination.

3. Office action:
   If it is determined that, after appropriate consultation, there is a potential rejection or any other issue to be addressed, the examiner will telephone the applicant and arrange an interview to discuss and resolve the issue. An Office action, other than a Notice of

Allowance and Fee(s) Due (Notice of Allowance), will not be issued unless either: 1) an interview was conducted but did not result in agreed to action that places the application in condition for allowance, or, 2) a determination is made that an interview would be unlikely to result in the application being placed in condition for allowance, and 3) an internal conference has been held to review any rejection of any claim.

4. Time for Reply:
An Office action other than a Notice of Allowance or a final Office action will set a shortened statutory period of one month or thirty days, whichever is longer, for reply with no extension of time available under 37 CFR 1.136(a). Failure to timely file a reply within this non-extendible period for reply will result in the abandonment of the application.

5. Reply by Applicant:
A timely reply to an Office action other than the Notice of Allowance must be submitted electronically via EFS or EFS-web and limited to addressing the rejections, objections and requirement made. Any amendment that attempts to: 1) add claims which would result in more than three pending independent claims or more than twenty pending total claims; 2) present claims not encompassed by the pre-examination search or an updated accelerated examination support document; or 3) present claims that are directed a non-elected invention or an invention other than that previously claimed and examined in the application, will be treated as not fully responsive and will not be entered.

   For any amendment to the claims (including any new claim) that is not encompassed by the accelerated examination support document, applicant must provide an updated accelerated examination support document that encompasses the amended or new claims at the time of filing of the amendment.

   To proceed expeditiously with the examination, it is recommended that a reply with amendments made to any claim or with any new claim being added be accompanied by an updated accelerated examination support document or a statement explaining how the amended or new claim is supported by the original accelerated examination support document.

6. Information Disclosure Statement (IDS):
Any IDS filed during prosecution must be submitted electronically via EFS or EFS-web, accompanied by an updated accelerated examination support document, and be in compliance with 37 CFR 1.97 and 1.98.

7. Post-Allowance Processing:
To expedite processing of the allowed application into a patent, the applicant must: 1) pay the required fees within one month of the date of the Notice of Allowance, and 2) not file any post allowance papers not required by the Office. In no event may the issue fee be paid and accepted later than three months from the date of the Notice of Allowance.

8. After-Final and Appeal Procedures:

To expedite prosecution, after receiving the final Office action, applicant must: 1) promptly file a notice of appeal, an appeal brief and appeal fees; and 2) not request a pre-appeal brief conference.

Any amendment, affidavit or other evidence filed after final Office action must comply with applicable rules and the requirements outlined in numbered paragraphs 5 and 6 above.

On appeal, the application will proceed according to normal appeal procedures. After appeal, the application will again be treated special.

9. Proceedings Outside the Normal Examination Process:
   If the application becomes involved in a proceeding that is outside the normal examination process (e.g., a secrecy order, national security review, interference proceeding, petitions under 37 CFR 1.181, 182 or 183), the application will be treated special before and after such proceeding.

10. Final Disposition:
    The twelve month goal of this accelerated examination procedure ends with a final disposition. The mailing of a final Office action, a Notice of Allowance, the filing of a Notice of Appeal, or the filing of a Request for Continued Examination (RCE) is the final disposition.

If, during prosecution, a paper is not filed electronically using EFS-web, a reply is filed but is not fully responsive, the application is involved in an appeal, or a proceeding outside normal examination process, the application will still be examined expeditiously, however, the final disposition may occur more than twelve months from the filing of the application.

Any inquiry regarding this decision should be directed to Ken Wieder, Quality Assurance Specialist, at (571) 272-2986.

Kenneth A. Wieder
Quality Assurance Specialist
Technology Center 2600 Communications

UNITED STATES PATENT AND TRADEMARK OFFICE

UNITED STATES DEPARTMENT OF COMMERCE
United States Patent and Trademark Office
Address: COMMISSIONER FOR PATENTS
P.O. Box 1450
Alexandria, Virginia 22313-1450
www.uspto.gov

APPLICATION NO.	FILING DATE	FIRST NAMED INVENTOR	ATTORNEY DOCKET NO.	CONFIRMATION NO.
12/189,539	08/11/2008	Hiroshi Hayashi	3712174-1401	7209

7590 10/08/2009

K&L Gates LLP
P. O. BOX 1135
CHICAGO, IL 60690

EXAMINER
NELMS, DAVID C

ART UNIT	PAPER NUMBER
2871	

NOTIFICATION DATE	DELIVERY MODE
10/08/2009	ELECTRONIC

DECISION GRANTING PETITION UNDER 37 CFR 1.138(d)

The declaration of express abandonment is recognized

This is in response to the petition under 37 CFR 1.138(d), requesting for a refund of any previously paid search fee and excess claims fee in the above-identified application.

The petition is granted.

The express abandonment is recognized. Any previously paid search fee and excess claims fee are hereby refunded.

Telephone inquiries should be directed to the Office of Data Management at (571) 272-4200.

Nioni Farmer

Patent Publication Branch
Office of Data Management

Adjustment date: 10/08/2009 NFARMER
08/12/2008 INTEFSW 00002157 021818 12189539
02 FC:1111 510.00 CR
04 FC:1201 210.00 CR

FORM PET651G (Rev. 08/07)

UNITED STATES PATENT AND TRADEMARK OFFICE

Commissioner for Patents
United States Patent and Trademark Office
P.O. Box 1450
Alexandria, VA 22313-1450
www.uspto.gov

PAUL, HASTINGS, JANOFSKY & WALKER LLP
875 15th Street, NW
Washington DC 20005

MAILED

MAR 0 2 2009

OFFICE OF PETITIONS

In re Application of	:	
MATHAI, Tom J. et. al.	:	
Application No. 12/189,540	:	DECISION ON PETITION
Filed: August 11, 2008	:	TO WITHDRAW
Attorney Docket No. **58729.00003.DIV2**	:	FROM RECORD

This is a decision on the Request to Withdraw as attorney or agent of record under 37 C.F.R. § 1.36(b), filed January 20, 2009.

The request is **APPROVED**.

A grantable request to withdraw as attorney/agent of record must be signed by every attorney/agent seeking to withdraw or contain a clear indication that one attorney is signing on behalf of another/others. The Office requires the practitioner(s) requesting withdrawal to certify that he, she, or they have: (1) given reasonable notice to the client, prior to the expiration of the response period, that the practitioner(s) intends to withdraw from employment; (2) delivered to the client or a duly authorized representative of the client all papers and property (including funds) to which the client is entitled; and (3) notified the client of any responses that may be due and the time frame within which the client must respond, pursuant 37 CFR 10.40(c).

The request was signed by Martin R. Bader on behalf of all attorneys of record who are associated with customer No. 36183. All attorneys/agents associated have been withdrawn. Applicant is reminded that there is no attorney of record at this time.

The correspondence address of record has been changed and the new correspondence address is the address indicated below.

There are no outstanding office actions at this time.

Telephone inquiries concerning this decision should be directed to Michelle R. Eason at 571-272-4231.

Michelle R. Eason
Paralegal Specialist
Office of Petitions

cc: **STREETSPACE, INC.**
TREVOR CODDINGTON, ESQ.
3510 CALLE HIDALGO
CARLSBAD, CA 92009

UNITED STATES PATENT AND TRADEMARK OFFICE

UNITED STATES DEPARTMENT OF COMMERCE
United States Patent and Trademark Office
Address: COMMISSIONER FOR PATENTS
P.O. Box 1450
Alexandria, Virginia 22313-1450
www.uspto.gov

WELLS ST. JOHN P.S.
601 W. FIRST AVENUE, SUITE 1300
SPOKANE, WA 99201

Mail Date: 04/21/2010

Applicant	: Allen McTeer	: DECISION ON REQUEST FOR
Patent Number	: 7632702	: RECALCULATION of PATENT
Issue Date	: 12/15/2009	: TERM ADJUSTMENT IN VIEW
Appliction No	: 12/189,543	: OF WYETH AND NOTICE OF INTENT TO
Filed	: 08/11/2008	: ISSUE CERTIFICATE OF CORRECTION
		:

The Request for Recalculation is **GRANTED** to the extent indicated.

The patent term adjustment has been determined to be **0** days. The USPTO will *sua sponte* issue a certificate of correction reflecting the amount of PTA days determined by the recalculation.

Prior to the issuance of the certificate of correction, the USPTO will afford patentee an opportunity to be heard and request reconsideration. Accordingly, patentee has **one month or thirty (30) days**, whichever is longer, to file a request for reconsideration of this patent term adjustment calculation. See 35 U.S.C. 154(b)(3)(B)(ii) and 37 CFR 1.322(a)(4). No extensions of time will be granted under 37 CFR 1.136.

Patentee should use document code PET.OP if electronically filing a request for reconsideration of this patent term adjustment calculation. The patentee must also include the information required by 37 CFR 1.705(b)(2) and the fee required by 37 CFR 1.18(e). If patentee does not file a timely request for reconsideration of this patent term adjustment calculation including the information required by 37 CFR 1.705(b)(2) and the fee required by 37 CFR 1.18(e), the USPTO will issue a certificate of correction reflecting the PTA determination noted above.

Patentee should be aware that in order to preserve the right to review in the United States District Court for the District of Columbia of the USPTO patent term adjustment determination, patentee must ensure that he or she also take the steps required under 35 U.S.C. 154(b)(4)(A) in a timely manner. Nothing in the request for recalculation should be construed as providing an alternative time frame for commencing a civil action under 35 U.S.C. 154(b)(4)(A).

Any questions concerning this decision should be directed to the Office of Patent Legal Administration at 571-272-7702.

UNITED STATES PATENT AND TRADEMARK OFFICE

Commissioner for Patents
United States Patent and Trademark Office
P.O. Box 1450
Alexandria, VA 22313-1450
www.uspto.gov

HARMAN-BRINKS HOFER CHICAGO
Brinks Hofer Gilson & Lione
P.O. Box 10395
Chicago, IL 60610

MAILED

JUL 29 2009

OFFICE OF PETITIONS

In re Application of	:	
Markus Buck, et al.	:	
Application No. 12/189,545	:	DECISION ON PETITION
Filed: August 11, 2008	:	TO WITHDRAW
Attorney Docket No. 11336/1909	:	FROM RECORD
	:	

This is a decision on the Request to Withdraw as attorney or agent of record under 37 C.F.R. § 1.36(b), filed June 15, 2009.

The request is **APPROVED.**

A grantable request to withdraw as attorney/agent of record must be signed by every attorney/agent seeking to withdraw or contain a clear indication that one attorney is signing on behalf of another/others. A request to withdraw will not be approved unless at least 30 (thirty) days would remain between the date of approval and the later of the expiration date of a time to file a response or the expiration date of the maximum time period which can be extended under 37 C.F.R. § 1.136(a).

The request was signed by John F. Nethery on behalf of all attorneys of record. All attorneys/agents have been withdrawn. Applicant is reminded that there is no attorney of record at this time.

The request to change the correspondence of record is not acceptable as the requested correspondence address is not that of: (1) the first named signing inventor; or (2) an intervening assignee of the entire interest under 37 C.F.R 3.71. All future communications from the Office will be directed to the first named signing inventor at the first copied address below until otherwise properly notified by the applicant.

Telephone inquiries concerning this decision should be directed to Terri Williams at 571-272-2991.

Terri Williams

Terri Williams
Petitions Examiner
Office of Petitions

cc: **Markus Buck**
Geschwister-Rommer-Weg 4
Biberach, 88400
Germany

cc: **Robert P. Hart, Esq.**
Harman International Industries, Inc.
8500 Balboa Boulevard
Northridge, CA 91329

UNITED STATES PATENT AND TRADEMARK OFFICE

UNITED STATES DEPARTMENT OF COMMERCE
United States Patent and Trademark Office
Address: COMMISSIONER FOR PATENTS
P.O. Box 1450
Alexandria, Virginia 22313-1450
www.uspto.gov

APPLICATION NUMBER	FILING OR 371(C) DATE	FIRST NAMED APPLICANT	ATTY. DOCKET NO./TITLE
12/189,545	08/11/2008	Markus Buck	11336/1909

CONFIRMATION NO. 7222

POWER OF ATTORNEY NOTICE

81166
HARMAN - BRINKS HOFER CHICAGO
Brinks Hofer Gilson & Lione
P.O. Box 10395
Chicago, IL 60610

OC000000037132961

Date Mailed: 07/29/2009

NOTICE REGARDING CHANGE OF POWER OF ATTORNEY

This is in response to the Power of Attorney filed 06/15/2009.

- The withdrawal as attorney in this application has been accepted. Future correspondence will be mailed to the new address of record. 37 CFR 1.33.

/tswilliams/

Office of Data Management, Application Assistance Unit (571) 272-4000, or (571) 272-4200, or 1-888-786-0101

UNITED STATES PATENT AND TRADEMARK OFFICE

UNITED STATES DEPARTMENT OF COMMERCE
United States Patent and Trademark Office
Address: COMMISSIONER FOR PATENTS
P.O. Box 1450
Alexandria, Virginia 22313-1450
www.uspto.gov

APPLICATION NO.	FILING DATE	FIRST NAMED INVENTOR	ATTORNEY DOCKET NO.	CONFIRMATION NO.
12/189,546	08/11/2008	Rene Theodorus Petrus COMPEN	1857.6140003	7223

7590 11/05/2009
STERNE, KESSLER, GOLDSTEIN & FOX P.L.L.C.
1100 NEW YORK AVENUE, N.W.
WASHINGTON, DC 20005

EXAMINER
GLICK, EDWARD J

ART UNIT	PAPER NUMBER
2882	

MAIL DATE	DELIVERY MODE
11/05/2009	PAPER

DECISION GRANTING PETITION UNDER 37 CFR 1.138(d)

The declaration of express abandonment is recognized

This is in response to the petition under 37 CFR 1.138(d), requesting for a refund of any previously paid search fee and excess claims fee in the above-identified application.

The petition is granted.

The express abandonment is recognized. Any previously paid search fee and excess claims fee are hereby refunded.

Telephone inquiries should be directed to the Office of Data Management at (571) 272-4200.

Nioni Farmer

Patent Publication Branch
Office of Data Management

Refund Ref:
11/05/2009 0032373503

Credit Card Refund Total: $2594.00

Acc Exp..: XXXXXXXXXXX1005

Adjustment date: 11/06/2009 NFARMER
12/10/2008 INTEFSW 00002826 12189546
02 FC:1111 -540.00 OP
04 FC:1202 -1664.00 OP
05 FC:1203 -390.00 OP

FORM PET651G (Rev. 08/07)

UNITED STATES PATENT AND TRADEMARK OFFICE

Commissioner for Patents
United States Patent and Trademark Office
P.O. Box 1450
Alexandria, VA 22313-1450
www.uspto.gov

MAIL

APR 22 2009

DIRECTOR'S OFFICE
TECHNOLOGY CENTER 2600

LEE, HONG, DEGERMAN, KANG & WAIMEY
660 S. FIGUEROA STREET
Suite 2300
LOS ANGELES CA 90017

In re Application of FISCHER, PATRICK Application No. 12/189,559 Filed: August 11, 2008 Attorney Docket No. **2101-3552**	: : : : : : :	DECISION ON REQUEST TO PARTICIPATE IN PATENT PROSECUTION HIGHWAY PILOT PROGRAM AND PETITION TO MAKE SPECIAL UNDER 37 CFR 1.102(d)

This is a decision on the request to participate in the Patent Prosecution Highway (PPH) pilot program and the petition under 37 CFR 1.102(d), filed April 9, 2009, to make the above-identified application special.

The request and petition are **DISMISSED**.

A grantable request to participate in the PPH pilot program and petition to make special require:

(1) The U.S. application must validly claim priority under 35 U.S.C. 119(a) to one or more applications filed in the EPO;
(2) Applicant must submit a copy of the allowable/patentable claim(s) from the EPO application(s);
(3) All the claims in the U.S. application must sufficiently correspond or be amended to sufficiently correspond to the allowable/patentable claim(s) in the EPO application(s);
(4) Examination of the U.S. application has not begun;
(5) Applicant must submit a copy of all the office actions from each of the EPO application(s) containing the allowable/patentable claim(s);
(6) Applicant must submit an IDS listing the documents cited by the EPO examiner in the EPO office action along with copies of documents except U.S. patents or U.S. patent application publications; and
(7) The required petition fee under 37 CFR 1.17(h).

The request to participate in the PPH pilot program and petition is deficient as follows:

Petitioner has not complied with item 1 above in that the petition fails to include a valid priority claim under 35 U.S.C. 119(a) to EPO/PCT application number 08159464.0.

Applicant is given a time period of **ONE MONTH or THIRTY DAYS**, whichever is longer, from the mailing date of this decision to correct the deficiencies. **NO EXTENSION OF TIME UNDER 37 CFR 1.136 IS PERMITTED.** If the deficiencies are not corrected with the time period given, the application will await action in its regular turn.

Any Response must be submitted by EFS web.

Telephone inquiries concerning this decision should be directed to Michael Horabik at 571-272-3068.

All other inquiries concerning the examination or status of the application should be directed to Patent Application Information Retrieval (PAIR) system.

Michael Horabik
Quality Assurance Specialist
Technology Center 2600
Communications

UNITED STATES PATENT AND TRADEMARK OFFICE

Commissioner for Patents
United States Patent and Trademark Office
P.O. Box 1450
Alexandria, VA 22313-1450
www.uspto.gov

LEE, HONG, DEGERMAN, KANG & WAIMEY
660 S. FIGUEROA STREET
Suite 2300
LOS ANGELES CA 90017

MAIL

JUN 0 3 2009

DIRECTOR'S OFFICE
TECHNOLOGY CENTER 2600

In re Application of	:	
FISCHER, PATRICK	:	DECISION ON REQUEST TO
Application No. 12/189,559	:	PARTICIPATE IN PATENT
Filed: August 11, 2008	:	PROSECUTION HIGHWAY PILOT
Attorney Docket No. 2101-3552	:	PROGRAM AND PETITION
	:	TO MAKE SPECIAL UNDER
	:	37 CFR 1.102(d)

This is a decision on the renewed request to participate in the Patent Prosecution Highway (PPH) pilot program and the petition under 37 CFR 1.102(d), filed April 29, 2009 to make the above-identified application special.

The request and petition are **GRANTED**.

A grantable request to participate in the PPH pilot program and petition to make special require:

(1) The U.S. application must validly claim priority under 35 U.S.C. 119(a) to one or more applications filed in the EPO;
(2) Applicant must submit a copy of the allowable/patentable claim(s) from the EPO application(s);
(3) All the claims in the U.S. application must sufficiently correspond or be amended to sufficiently correspond to the allowable/patentable claim(s) in the EPO application(s);
(4) Examination of the U.S. application has not begun;
(5) Applicant must submit a copy of all the office actions from each of the EPO application(s) containing the allowable/patentable claim(s);
(6) Applicant must submit an IDS listing the documents cited by the EPO examiner in the EPO office action along with copies of documents except U.S. patents or U.S. patent application publications; and
(7) The required petition fee under 37 CFR 1.17(h).

The request to participate in the PPH pilot program and petition now comply with the above requirements. Accordingly, the above-identified application has been accorded "special" status.

Telephone inquiries concerning this decision should be directed to Michael Horabik at 571-272-3068.

All other inquiries concerning the examination or status of the application should be directed to Patent Application Information Retrieval (PAIR) system.

The application is being forwarded to the examiner for action on the merits commensurate with this decision.

Michael Horabik
Quality Assurance Specialist
Technology Center 2600
Communications

UNITED STATES PATENT AND TRADEMARK OFFICE

Commissioner for Patents
United States Patent and Trademark Office
P.O. Box 1450
Alexandria, VA 22313-1450
www.uspto.gov

PAUL, HASTINGS, JANOFSKY & WALKER LLP
875 15TH STREET, NW
WASHINGTON, DC 20005

COPY MAILED

MAR 02 2009

OFFICE OF PETITIONS

In re Application of	:	
Tom J. Mathai, et al.	:	
Application No. 12/189,596	:	DECISION ON PETITION
Filed: August 11, 2008	:	TO WITHDRAW
Attorney Docket No. 58729.00003.CON1	:	FROM RECORD
	:	

This is a decision on the Request to Withdraw as attorney or agent of record under 37 C.F.R. § 1.36(b), filed January 20, 2009.

The request is **DISMISSED** as moot.

A review of the file record indicates that the power of attorney to Paul, Hastings, Janofsky & Walker, LLP has been revoked by the assignee of the patent application on September 23, 2008. Accordingly, the request to withdraw under 37 C.F.R. § 1.36(b) is moot.

All future communications from the Office will continue to be directed to the below-listed address until otherwise notified by applicant.

Telephone inquires concerning this decision should be directed to undersigned at 571-272-1642.

/AMW/
April M. Wise
Petitions Examiner
Office of Petitions

cc: STREETSPACE, INC.
TREVOR CODDINGTON, ESQ.
3510 CALLE HIDALGO
CARLSBAD, CA 92009

UNITED STATES PATENT AND TRADEMARK OFFICE

Commissioner for Patents
United States Patent and Trademark Office
P.O. Box 1450
Alexandria, VA 22313-1450
www.uspto.gov

MAIL

JAN 26 2009

DIRECTOR'S OFFICE
TECHNOLOGY CENTER 2600

MAIL

JAN 24 2009

DIRECTOR'S OFFICE
TECHNOLOGY CENTER 2600

FOLEY & LARDNER LLP
150 EAST GILMAN STREET
P.O. BOX 1497
MADISON WI 53701-1497

In re Application of:
MYERS, THEODORE J.
Serial No.: 12/189,609
Filed: August 11, 2008
Attorney Docket number: **091721-0103**
Title: **RANDOM PHASE MULTIPLE ACCESS COMMUNICATION INTERFACE SYSTEM AND METHOD**

DECISION ON PETITION TO MAKE SPECIAL FOR NEW APPLICATION UNDER 37 C.F.R. § 1.102 & M.P.E.P. § 708.02

This is a decision on the petition filed on August 11, 2008 to make the above-identified application special for accelerated examination procedure under 37 C.F.R. § 1.102(d).

The petition to make the application special is **DISMISSED**.

REGULATION AND PRACTICE

A grantable petition to make special under 37 C.F.R. § 1.102(d) and pursuant to the "Change to Practice for Petitions in Patent Applications to Make Special and for Accelerated Examination" published in the Federal Register on June 26, 2006 (71 Fed. Reg. 36323), must satisfy the following conditions:

I. Conditions Regarding the Application:

1. the application must be a non-reissue utility or design application filed under 37 CFR 1.111(a);
2. the application, the petition and the required fees must be filed electronically using the USPTO's electronic filing system (EFS), or EFS-web; if not filed electronically, a statement asserting that EFS and EFS-web were not available during the normal business hours.
3. at the time of filing, the application must be complete under 37 CFR 1.51 and in condition for examination;
4. the application must contain three or fewer independent claims and twenty or fewer total claims and the claims must be directed to a single invention.

II. Conditions Regarding the Petition:

The petition must:

1. be filed with the application;

2. include a statement that applicant agrees not to separately argue the patentability of any independent claim during any appeal in the application;

3. include a statement that applicant agrees to make an election without traverse in a telephone interview.

4. include a statement that applicant agrees to conduct such an interview when requested by the examiner.

5. include a statement, made based on a good faith belief, that a preexamination search in compliance with the following requirements, was conducted, including an identification of the filed of search by United States class and subclass, where applicable, and for database searches, the search logic or chemical structure or sequence used as a query, the name of the file(s) searched and the database service, and the date of the search.

The preexamination search must:

5.1 involve U.S. patents and patent application publications, foreign patent documents, and non-patent literature, unless the applicant can justify with reasonable certainty that no references more pertinent than those already identified are likely to be found in the eliminated sources and includes such a justification with this statement;

5.2. be directed to the claimed invention and encompass all of the features of the claims, giving the claims the broadest reasonable interpretation;

5.3. encompass the disclosed features that may be claimed.

6. must provide in support of the petition an accelerated examination support document.

An accelerated examination support document must include:

6.1. an information disclosure statement (IDS) in compliance with 37 CFR 1.98 citing each reference deemed most closely related to the subject matter of each of the claims;

6.2. an identification of all the limitations in the claims that are disclosed by the reference specifying where the limitation is disclosed in the cited reference;

6.3. a detailed explanation of how each of the claims are patentable over the references cited with particularity required by 37 CFR 1.111(b) and (c);

6.4. a concise statement of the utility of the invention as defined in each of the independent claims (unless the application is a design application);

6.5. a showing of where each limitation of the claims finds support under 35 USC 112, first paragraph, in the written description of the specification. If applicable, the showing must also identify: (1) each means- (or step) plus-function claim element that invokes consideration under 35 USC 112, sixth paragraph; and (2) the structure, material, or acts in the specification that corresponds to each means- (or step) plus-function claim element that invokes consideration under 35 USC 112, sixth paragraph; if the application claims the benefit of one or more applications under title 35, United States Code, the showing must also include where each limitation of the claims finds support under 35 USC 112, first paragraph, in each such application in which such supports exists;

6.6. an identification of any cited references that may be disqualified under 35 USC 103(c).

REVIEW OF FACTS

The conditions set forth under section I. above are considered to have been met. However, the petition fails to comply with conditions set forth under section II, items 5.2, 5.3, 6.3 and 6.5.

For these reasons cited above, the petition fails to meet the required conditions to be accorded special status under the accelerated examination procedure.

Regarding the requirement in item 5.2 and 5.3 above, the preexamination search document provided with the instant petition is deficient as follows: The US field of search and database searches which are to be provided under section 8(A) are not sufficient. In addition to the search areas provided, applicant would also need to search the following class/subclasses:
370/335,441,479,515; 375/140,145,149,367
Also regarding the search, keywords used are too narrow without using alternate search terms such as: "phase offset" in place of "chip offset", and "spreading" as an alternate search term of "PN".

If any request for reconsideration is filed, an updated preexamination search must be conducted as per item 5.1 above, and the Preexamination Search Document must be amended to indicate such; a new Information Disclosure Statement should be filed to cite any newly found prior art, and the Accelerated Examination Support Document must also be amended to include the necessary reference and discussion of any newly found and cited prior art in accordance with all of items 6 through 6.6 above.

Regarding the requirement in item 6.3 above, the Accelerated Examination Support Document is deficient because the section titled "Detailed Explanation of Patentability" fails to provide a "detailed explanation of how *each* of the claims is patentable over *each* of the references cited with particularity required by 37 CFR 1.111(b) and (c)". In section 9(B) of the Accelerated Examination Support Document, petitioner identifies claim limitations that are not taught by each reference individually without clearly identifying which limitations are specifically taught by each reference. In Section 9(C), petitioner identifies for only claim 1 of limitations that all of the references fail to teach or suggest. However, the limitations identified in item 9(B) and 9(C) noted above are in some instances different from reference to reference, thus leading to confusion as to how the claim is patentable over *each* of the references cited with particularity required by 37 CFR 1.111(b) and (c). Furthermore, it fails to provide how each of the claims is patentable over the *combination* of the cited references. The petition merely repeats the claimed limitations and explains that the claim is patentably distinguished over each or combination of references cited. Clarification is required.

Regarding the requirement in item 6.5 above, the "Accelerated Examination Support Document", is deficient because section 9(F) fails to include a showing of where ***each limitation of each of the claims*** finds support under the first paragraph of 35 USC 112 in the written description of the application claims the benefit of one or more applications under title 35, United States Code, the showing must also include where each limitation of the claims finds support under 35 USC 112, first paragraph, in each such application in which such supports exists. Petitioner claims priority to U.S. Provisional Application No. 61/037,522 without providing any indication of a showing where each specific claim limitation finds support in the written description of the specification for each of the claims. Therefore, an updated accelerated examination support document must be provided which shows where each limitation of the claims finds support in this benefit application.

DECISION

For the above-stated reasons, the petition is **dismissed**. The application will therefore be taken up by the examiner for action in its regular turn.

Petitioner is given a single opportunity to perfect the petition. Any request for reconsideration of this decision must be submitted within 1 (one) month or 30 (thirty) days, whichever is longer, (no extension

of time under 37 CFR 1.136(a)) from the date of this decision in order to be considered timely. Any request for reconsideration must address the deficiencies indicated above.

Petitioner is reminded that, upon granting of the special status of the application on request for reconsideration, the application will be processed expeditiously. However, due to the dismissal of the instant petition, examination may not be completed within twelve months of the filing date of the application.

Any inquiry regarding this decision should be directed to Ken Wieder, Quality Assurance Specialist, at (571) 272-2986.

Kenneth A. Wieder
Quality Assurance Specialist
Technology Center 2600
Communications

547 UNITED STATES PATENT AND TRADEMARK OFFICE

Commissioner for Patents
United States Patent and Trademark Office
P.O. Box 1450
Alexandria, VA 22313-1450
www.uspto.gov

MAIL

MAR 20 2009
DIRECTOR'S OFFICE
TECHNOLOGY CENTER 2600

FOLEY & LARDNER LLP
150 EAST GILMAN STREET
P.O. BOX 1497
MADISON WI 53701-1497

In re Application of:
MYERS, THEODORE J.
Serial No.: 12/189,609
Filed: August 11, 2008
Title: RANDOM PHASE MULTIPLE ACCESS COMMUNICATION INTERFACE SYSTEM AND METHOD

DECISION ON PETITION TO MAKE SPECIAL FOR NEW APPLICATION UNDER 37 C.F.R. § 1.102 & M.P.E.P. § 708.02

The petition to make the application special is **GRANTED**.

The application is eligible for accelerated examination and the petition complies with the conditions for granting the application special status pursuant to the "Change to Practice for Petitions in Patent Applications to Make Special and for Accelerated Examination" published June 26, 2006, in the Federal Register. (71 Fed. Reg. 36323).

The prosecution of the instant application will be conducted expeditiously according to the following guidelines.

1. The application will be docketed to an examiner and taken up for action within two weeks of the date of this decision.

2. Restriction Practice:
   If the examiner determines that the claims are not directed to a single invention, a telephone request to elect one single invention will be made pursuant to MPEP 812.01. As a prerequisite to the grant of this petition, the applicant has agreed to make an oral election, by telephone, without traverse. If the applicant refuses to make an election without traverse, or the examiner cannot reach the applicant after a reasonable effort, the examiner will treat the first claimed invention (invention defined by claim 1) as having being constructively elected without traverse for examination.

3. Office action:
   If it is determined that, after appropriate consultation, there is a potential rejection or any other issue to be addressed, the examiner will telephone the applicant and arrange an interview to discuss and resolve the issue. An Office action, other than a Notice of

Allowance and Fee(s) Due (Notice of Allowance), will not be issued unless either: 1) an interview was conducted but did not result in agreed to action that places the application in condition for allowance, or, 2) a determination is made that an interview would be unlikely to result in the application being placed in condition for allowance, and 3) an internal conference has been held to review any rejection of any claim.

4. Time for Reply:
An Office action other than a Notice of Allowance or a final Office action will set a shortened statutory period of one month or thirty days, whichever is longer, for reply with no extension of time available under 37 CFR 1.136(a). Failure to timely file a reply within this non-extendible period for reply will result in the abandonment of the application.

5. Reply by Applicant:
A timely reply to an Office action other than the Notice of Allowance must be submitted electronically via EFS or EFS-web and limited to addressing the rejections, objections and requirement made. Any amendment that attempts to: 1) add claims which would result in more than three pending independent claims or more than twenty pending total claims; 2) present claims not encompassed by the pre-examination search or an updated accelerated examination support document; or 3) present claims that are directed a non-elected invention or an invention other than that previously claimed and examined in the application, will be treated as not fully responsive and will not be entered.

   For any amendment to the claims (including any new claim) that is not encompassed by the accelerated examination support document, applicant must provide an updated accelerated examination support document that encompasses the amended or new claims at the time of filing of the amendment.

   To proceed expeditiously with the examination, it is recommended that a reply with amendments made to any claim or with any new claim being added be accompanied by an updated accelerated examination support document or a statement explaining how the amended or new claim is supported by the original accelerated examination support document.

6. Information Disclosure Statement (IDS):
Any IDS filed during prosecution must be submitted electronically via EFS or EFS-web, accompanied by an updated accelerated examination support document, and be in compliance with 37 CFR 1.97 and 1.98.

7. Post-Allowance Processing:
To expedite processing of the allowed application into a patent, the applicant must: 1) pay the required fees within one month of the date of the Notice of Allowance, and 2) not file any post allowance papers not required by the Office. In no event may the issue fee be paid and accepted later than three months from the date of the Notice of Allowance.

8. After-Final and Appeal Procedures:

To expedite prosecution, after receiving the final Office action, applicant must: 1) promptly file a notice of appeal, an appeal brief and appeal fees; and 2) not request a pre-appeal brief conference.

Any amendment, affidavit or other evidence filed after final Office action must comply with applicable rules and the requirements outlined in numbered paragraphs 5 and 6 above.

On appeal, the application will proceed according to normal appeal procedures. After appeal, the application will again be treated special.

9. Proceedings Outside the Normal Examination Process:
   If the application becomes involved in a proceeding that is outside the normal examination process (e.g., a secrecy order, national security review, interference proceeding, petitions under 37 CFR 1.181, 182 or 183), the application will be treated special before and after such proceeding.

10. Final Disposition:
    The twelve month goal of this accelerated examination procedure ends with a final disposition. The mailing of a final Office action, a Notice of Allowance, the filing of a Notice of Appeal, or the filing of a Request for Continued Examination (RCE) is the final disposition.

If, during prosecution, a paper is not filed electronically using EFS-web, a reply is filed but is not fully responsive, the application is involved in an appeal, or a proceeding outside normal examination process, the application will still be examined expeditiously, however, the final disposition may occur more than twelve months from the filing of the application.

Any inquiry regarding this decision should be directed to Ken Wieder, Quality Assurance Specialist, at (571) 272-2986.

Kenneth A. Wieder
Quality Assurance Specialist
Technology Center 2600 Communications

UNITED STATES PATENT AND TRADEMARK OFFICE

Commissioner for Patents
United States Patent and Trademark Office
P.O. Box 1450
Alexandria, VA 22313-1450
www.uspto.gov

THE NATH LAW GROUP
112 South West Street
Alexandria, VA 22314

MAILED

MAY 24 2010

OFFICE OF PETITIONS

In re Application of
Il Doo Kim
Application No. 12/189,612
Filed: August 11, 2008
Attorney Docket No. 31109-10

DECISION ON PETITION TO WITHDRAW FROM RECORD

This is a decision on the Request to Withdraw as attorney or agent under 37 CFR § 1.36(b) or 37 CFR § 10.40 filed January 29, 2010.

The request is **APPROVED**.

A review of the file record indicates that Joshua B. Goldberg and the attorneys/agents associated with Customer Number 20529: (1) does not have power of attorney in this patent application; but (2) have been employed or otherwise engaged in the proceedings in this patent application. In view of the present decision, Joshua B. Goldberg and the attorneys/agents associated with Customer Number 20529 have been withdrawn from the present application and may not prepare or submit papers under 37 CFR § 1.34, or correspond in any manner in this application unless appointed in an acceptable power of attorney under 37 CFR § 1.32(b).

The request to change the correspondence of record is not acceptable as the requested correspondence address is not that of: (1) the first named signing inventor; or (2) the intervening assignee of the entire interest. Therefore, all future communications from the Office will continue to be directed to the above address below until otherwise properly notified by the applicant.

Applicant is reminded that there are no attorneys/agents of record at this time.

This application file is being referred to Technology Center Art Unit 2831 for examination in due course.

Telephone inquires concerning this decision should be directed to the undersigned at (571) 272-3226.

Andrea Smith
Petitions Examiner
Office of Petitions

cc: Korea Institute of Science and Technology
c/o William E. Beaumont
627 South Asaph Street
Alexandria, VA 22314

UNITED STATES PATENT AND TRADEMARK OFFICE

Commissioner for Patents
United States Patent and Trademark Office
P.O. Box 1450
Alexandria, VA 22313-1450
www.uspto.gov

FOLEY & LARDNER LLP
150 EAST GILMAN STREET
P.O. BOX 1497
MADISON WI 53701-1497

DEC 0 8 2008

In re Application of:
Jun Liang et al.
Serial No.: 12/189,619
Filed: August 11, 2008
Docket: 091721-0104
Title: UPLINK TRANSMITTER IN A RANDOM PHASE MULTIPLE ACCESS COMMUNICATION SYSTEM

DECISION ON PETITION TO MAKE SPECIAL FOR NEW APPLICATION UNDER 37 C.F.R. § 1.102 & M.P.E.P. § 708.02

This is a decision on the petition filed on August 11, 2008 to make the above-identified application special for accelerated examination procedure under 37 C.F.R. § 1.102(d).

The petition to make the application special is **DISMISSED**.

REGULATION AND PRACTICE

A grantable petition to make special under 37 C.F.R. § 1.102(d) and pursuant to the "Change to Practice for Petitions in Patent Applications to Make Special and for Accelerated Examination" published in the Federal Register on June 26, 2006 (71 Fed. Reg. 36323), must satisfy the following conditions:

I. Conditions Regarding the Application:

1. the application must be a non-reissue utility or design application filed under 37 CFR 1.111(a);
2. the application, the petition and the required fees must be filed electronically using the USPTO's electronic filing system (EFS), or EFS-web; if not filed electronically, a statement asserting that EFS and EFS-web were not available during the normal business hours.
3. at the time of filing, the application must be complete under 37 CFR 1.51 and in condition for examination;
4. the application must contain three or fewer independent claims and twenty or fewer total claims and the claims must be directed to a single invention.

II. Conditions Regarding the Petition:

The petition must:

1. be filed with the application;

2. include a statement that applicant agrees not to separately argue the patentability of any independent claim during any appeal in the application;

3. include a statement that applicant agrees to make an election without traverse in a telephone interview.

4. include a statement that applicant agrees to conduct such an interview when requested by the examiner.

5. include a statement, made based on a good faith belief, that a preexamination search in compliance with the following requirements, was conducted, including an identification of the filed of search by United States class and subclass, where applicable, and for database searches, the search logic or chemical structure or sequence used as a query, the name of the file(s) searched and the database service, and the date of the search.

The preexamination search must:

5.1 involve U.S. patents and patent application publications, foreign patent documents, and non-patent literature, unless the applicant can justify with reasonable certainty that no references more pertinent than those already identified are likely to be found in the eliminated sources and includes such a justification with this statement;

5.2. be directed to the claimed invention and encompass all of the features of the claims, giving the claims the broadest reasonable interpretation;

5.3. encompass the disclosed features that may be claimed.

6. must provide in support of the petition an accelerated examination support document. An accelerated examination support document must include:

6.1. an information disclosure statement (IDS) in compliance with 37 CFR 1.98 citing each reference deemed most closely related to the subject matter of each of the claims;

6.2. an identification of all the limitations in the claims that are disclosed by the reference specifying where the limitation is disclosed in the cited reference;

6.3. a detailed explanation of how each of the claims is patentable over the references cited with particularity required by 37 CFR 1.111(b) and (c);

6.4. a concise statement of the utility of the invention as defined in each of the independent claims (unless the application is a design application);

6.5. a showing of where each limitation of the claims finds support under 35 USC 112, first paragraph, in the written description of the specification. If applicable, the showing must also identify: (1) each means- (or step) plus-function claim element that invokes consideration under 35 USC 112, sixth paragraph; and (2) the structure, material, or acts in the specification that corresponds to each means- (or step) plus-function claim element that invokes consideration under 35 USC 112, sixth paragraph; if the application claims the benefit of one or more applications under title 35, United States Code, the showing must also include where each limitation of the claims finds support under 35 USC 112, first paragraph, in each such application in which such supports exists;

6.6. an identification of any cited references that may be disqualified under 35 USC 103(c).

REVIEW OF FACTS

The conditions I.1 – I.4, II.1 – II.4, II5.1, II.5.3, II.6.1 – II.6.4 and II.6.6 above are considered to have been met. However, the petition fails to comply with conditions II.5.2 and II.6.5 above. Therefore, the petition fails to meet the required conditions to be accorded special status under the accelerated examination procedure.

Regarding the requirement of MPEP § 708.02(a)(I.)(H)[1] and items II.5 and 5.2 above, the preexamination search must be directed to the (instant) claimed invention and encompass all of the features of the claims, giving the claims the broadest reasonable interpretation.

With respect to item II.5.2 above, claim limitations some of which have been identified as patentable features distinguishing the claimed invention from the cited prior art (such as "timing offset" or "time offset", "pn code" or "spreading code" or "gold code" and "time slot" in claim 1 and all limitations recited in claims 2-20) or any search terms covering these limitations do not appear to have been included in the search in a database that includes US Patents and US PG Pubs. Petitioner should review all claim limitations, especially those asserted as patentable distinctions from the cited references to ensure the search covered these concepts, and update the search and/or provide any clarifications if deemed necessary. Finally, based upon the claimed subject matter of the instant application, a search in the following classes and subclasses is recommended in order to provide full coverage of where the most pertinent references are most likely to be found: Class 370 subclasses 320, 338, 347, 508 and class 375 subclasses 145 and 146 to cover subject matter recited in claims 1-20. This additional search area was confirmed with a Primary examiner in the pertinent art area (Class 370).

Finally, with respect to the requirement of MPEP § 708.02(a)(I.)(I)(5) and item 6.5 above, the Accelerated Examination Support Document only identifies specific figures and portions of text in the specification as providing support under 35 U.S.C. 112, First paragraph, but fails to provide a proper showing of the support for each and every claim limitation and the corresponding support in the cited portions of specification. Clarification and specific identification of support is required. Similar clarification and identification of support is required for each claim limitation in Provisional application 61/037522, from which the instant application claims benefit under 35 U.S.C. 120.

DECISION

For the above-stated reasons, the petition is **DISMISSED**. The application will therefore be taken up by the examiner for action in its regular turn.

Petitioner is given a single opportunity to perfect the petition. Any request for reconsideration of this decision must be submitted within 1 (one) month or 30 (thirty) days, whichever is longer, (no extension of time under 37 CFR 1.136(a)) from the date of this decision in order to be

[1] MPEP 8th ed. rev 7 July 2008

considered timely. Any request for reconsideration must address the deficiencies indicated above.

Petitioner is reminded that, upon granting of the special status of the application on request for reconsideration, the application will be processed expeditiously. However, due to the dismissal of the instant petition, examination may not be completed within twelve months of the filing date of the application.

Any inquiry regarding this decision should be directed to Chau Nguyen at (571) 272-3126.

Chau T. Nguyen

Chau T. Nguyen
Workgroup Quality Assurance Specialist
Technology Center 2400
Network, Multiplexing, Cable and Security

UNITED STATES PATENT AND TRADEMARK OFFICE

Commissioner for Patents
United States Patent and Trademark Office
P.O. Box 1450
Alexandria, VA 22313-1450
www.uspto.gov

FOLEY & LARDNER LLP
150 EAST GILMAN STREET
P.O. BOX 1497
MADISON WI 53701-1497

MAIL

FEB 24 2009

DIRECTOR OFFICE
TECHNOLOGY CENTER 2600

In re Application of:
MYERS, THEODORE J.
Serial No.: 12/189,619
Filed: August 11, 2008

Title: **UPLINK TRANSMITTER IN A RANDOM PHASE MULTIPLE ACCESS COMMUNICATION SYSTEM**

DECISION ON PETITION TO MAKE SPECIAL FOR NEW APPLICATION UNDER 37 C.F.R. § 1.102 & M.P.E.P. § 708.02

This is a decision on the petition filed on January 7, 2009 requesting reconsideration that the above-identified application be made special for accelerated examination procedure under 37 C.F.R. § 1.102(d). The original petition, submitted on August 11, 2008 was dismissed in the decision mailed on December 8, 2008.

The renewed petition to make the application special is **GRANTED** as the supplemental search along with the orginal search now meets the requirements of condition II. 5 and 5.2.

The application is eligible for accelerated examination and the petition complies with the conditions for granting the application special status pursuant to the "Change to Practice for Petitions in Patent Applications to Make Special and for Accelerated Examination" published June 26, 2006, in the Federal Register. (71 Fed. Reg. 36323).

The prosecution of the instant application will be conducted expeditiously according to the following guidelines.

1. The application will be docketed to an examiner and taken up for action within two weeks of the date of this decision.

2. Restriction Practice:
   If the examiner determines that the claims are not directed to a single invention, a telephone request to elect one single invention will be made pursuant to MPEP 812.01. As a prerequisite to the grant of this petition, the applicant has agreed to make an oral

election, by telephone, without traverse. If the applicant refuses to make an election without traverse, or the examiner cannot reach the applicant after a reasonable effort, the examiner will treat the first claimed invention (invention defined by claim 1) as having being constructively elected without traverse for examination.

3. Office action:
If it is determined that, after appropriate consultation, there is a potential rejection or any other issue to be addressed, the examiner will telephone the applicant and arrange an interview to discuss and resolve the issue. An Office action, other than a Notice of Allowance and Fee(s) Due (Notice of Allowance), will not be issued unless either: 1) an interview was conducted but did not result in agreed to action that places the application in condition for allowance, or, 2) a determination is made that an interview would be unlikely to result in the application being placed in condition for allowance, and 3) an internal conference has been held to review any rejection of any claim.

4. Time for Reply:
An Office action other than a Notice of Allowance or a final Office action will set a shortened statutory period of one month or thirty days, whichever is longer, for reply with no extension of time available under 37 CFR 1.136(a). Failure to timely file a reply within this non-extendible period for reply will result in the abandonment of the application.

5. Reply by Applicant:
A timely reply to an Office action other than the Notice of Allowance must be submitted electronically via EFS or EFS-web and limited to addressing the rejections, objections and requirement made. Any amendment that attempts to: 1) add claims which would result in more than three pending independent claims or more than twenty pending total claims; 2) present claims not encompassed by the pre-examination search or an updated accelerated examination support document; or 3) present claims that are directed a non-elected invention or an invention other than that previously claimed and examined in the application, will be treated as not fully responsive and will not be entered.

   For any amendment to the claims (including any new claim) that is not encompassed by the accelerated examination support document, applicant must provide an updated accelerated examination support document that encompasses the amended or new claims at the time of filing of the amendment.

   To proceed expeditiously with the examination, it is recommended that a reply with amendments made to any claim or with any new claim being added be accompanied by an updated accelerated examination support document or a statement explaining how the amended or new claim is supported by the original accelerated examination support document.

6. Information Disclosure Statement (IDS):

Any IDS filed during prosecution must be submitted electronically via EFS or EFS-web, accompanied by an updated accelerated examination support document, and be in compliance with 37 CFR 1.97 and 1.98.

7. Post-Allowance Processing:
   To expedite processing of the allowed application into a patent, the applicant must: 1) pay the required fees within one month of the date of the Notice of Allowance, and 2) not file any post allowance papers not required by the Office. In no event may the issue fee be paid and accepted later than three months from the date of the Notice of Allowance.

8. After-Final and Appeal Procedures:
   To expedite prosecution, after receiving the final Office action, applicant must: 1) promptly file a notice of appeal, an appeal brief and appeal fees; and 2) not request a pre-appeal brief conference.

   Any amendment, affidavit or other evidence filed after final Office action must comply with applicable rules and the requirements outlined in numbered paragraphs 5 and 6 above.

   On appeal, the application will proceed according to normal appeal procedures. After appeal, the application will again be treated special.

9. Proceedings Outside the Normal Examination Process:
   If the application becomes involved in a proceeding that is outside the normal examination process (e.g., a secrecy order, national security review, interference proceeding, petitions under 37 CFR 1.181, 182 or 183), the application will be treated special before and after such proceeding.

10. Final Disposition:
    The twelve month goal of this accelerated examination procedure ends with a final disposition. The mailing of a final Office action, a Notice of Allowance, the filing of a Notice of Appeal, or the filing of a Request for Continued Examination (RCE) is the final disposition.

If, during prosecution, a paper is not filed electronically using EFS-web, a reply is filed but is not fully responsive, the application is involved in an appeal, or a proceeding outside normal examination process, the application will still be examined expeditiously, however, the final disposition may occur more than twelve months from the filing of the application.

Any inquiry regarding this decision should be directed to Chau Nguyen, at (571) 272-3126.

Chau T. Nguyen

Chau Nguyen
Quality Assurance Specialist
Technology Center 2400

UNITED STATES PATENT AND TRADEMARK OFFICE

Commissioner for Patents
United States Patent and Trademark Office
P.O. Box 1450
Alexandria, VA 22313-1450
www.uspto.gov

HAYES SOLOWAY P.C.
3450 E. SUNRISE DRIVE, SUITE 140
TUCSON AZ 85718

MAILED

APR 13 2010

OFFICE OF PETITIONS

In re Application of	:	
James C. Withers et al.	:	
Application No. 12/189,658	:	DECISION ON PETITION
Filed: August 11, 2008	:	TO MAKE SPECIAL UNDER
Attorney Docket No. **MER 07.04**	:	37 CFR 1.102(c)(1)
	:	

This is a decision on the petition under 37 CFR 1.102(c)(1), filed January 7, 2010, to make the above-identified application special based on applicant's age as set forth in MPEP § 708.02, Section IV.

The petition is **GRANTED**.

A grantable petition to make an application special under 37 CFR 1.102(c)(1) and MPEP § 708.02, Section IV: Applicant's Age must be accompanied by evidence showing that at least one of the applicants is 65 years of age, or more, such as a birth certificate or a statement by applicant. No fee is required

The instant petition includes a statement by the inventor. Accordingly, the above-identified application has been accorded "special" status.

Telephone inquiries concerning this decision should be directed to JoAnne Burke at 571-272-4584.

All other inquiries concerning either the examination or status of the application should be directed to the Technology Center.

The application is being forwarded to the Technology Center Art Unit 1715 for action on the merits commensurate with this decision.

JoAnne Burke
Petitions Examiner
Office of Petitions

UNITED STATES PATENT AND TRADEMARK OFFICE

Commissioner for Patents
United States Patent and Trademark Office
P.O. Box 1450
Alexandria, VA 22313-1450
www.uspto.gov

Paul, Hastings, Janofsky & Walker, LLP
875 15th Street, NW
Washington, DC 20005

MAILED

MAR 12 2009

OFFICE OF PETITIONS

In re Application of	:	
Thomas J. Mathai et al.	:	
Application No. 12/189,693	:	DECISION ON PETITION
Filed: August 11, 2008	:	TO WITHDRAW
Attorney Docket No. 58724.00003.DIV1	:	FROM RECORD
	:	

This is a decision on the Request to Withdraw as attorney or agent of record under 37 C.F.R. § 1.36(b), filed January 16, 2009.

The request is **APPROVED**.

A grantable request to withdraw as attorney/agent of record must be signed by every attorney/agent seeking to withdraw or contain a clear indication that one attorney is signing on behalf of another/others. A request to withdraw will not be approved unless at least 30 (thirty) days would remain between the date of approval and the later of the expiration date of a time to file a response or the expiration date of the maximum time period which can be extended under 37 C.F.R. § 1.136(a).

The request was signed by Martin R. Bader on behalf of all attorneys/agents associated with customer number 36183. All attorneys/agents associated with customer number 36183 have been withdrawn.

Applicant is reminded that there is no attorney of record at this time.

The request to change the correspondence of record is not acceptable as the requested correspondence address is not that of (1) the first named signing inventor; or (2) an intervening assignee of the entire interest under 37 C.F.R. 3.71. Accordingly, all correspondence will be mailed to address of the assignee at the first copied address below. A courtesy copy of this decision will be mailed to the address noted on the request. If this person(s) desire to receive future correspondence regarding this application, the proper power of attorney documents must be submitted.

Telephone inquiries concerning this decision should be directed to Kimberly Inabinet at 571-272-4618.

Kimberly Inabinet
Petitions Examiner
Office of Petitions

cc: Xanthia Global , Ltd.
701 Level 7, Uptown 2, No. 2
Jalan SS 21/37, Damanasara Uptown
Petaling Jaya, Selangor, Malaysia

cc: Thomas Mathai
Trevor Coddington, Esq.
3510 Calle Hidalgo
Carlsbad, CA 92009

UNITED STATES PATENT AND TRADEMARK OFFICE

UNITED STATES DEPARTMENT OF COMMERCE
United States Patent and Trademark Office
Address: COMMISSIONER FOR PATENTS
P.O. Box 1450
Alexandria, Virginia 22313-1450
www.uspto.gov

APPLICATION NUMBER	FILING OR 371(C) DATE	FIRST NAMED APPLICANT	ATTY. DOCKET NO./TITLE
12/189,693	08/11/2008	Thomas J. Mathai	58724.00003.DIV1

CONFIRMATION NO. 7473

POWER OF ATTORNEY NOTICE

36183
PAUL, HASTINGS, JANOFSKY & WALKER LLP
875 15th Street, NW
Washington, DC 20005

OC000000034960258

Date Mailed: 03/12/2009

NOTICE REGARDING CHANGE OF POWER OF ATTORNEY

This is in response to the Power of Attorney filed 01/16/2009.

- The withdrawal as attorney in this application has been accepted. Future correspondence will be mailed to the new address of record. 37 CFR 1.33.

/kainabinet/

Office of Data Management, Application Assistance Unit (571) 272-4000, or (571) 272-4200, or 1-888-786-0101

UNITED STATES PATENT AND TRADEMARK OFFICE

UNITED STATES DEPARTMENT OF COMMERCE
United States Patent and Trademark Office
Address: COMMISSIONER FOR PATENTS
P.O. Box 1450
Alexandria, Virginia 22313-1450
www.uspto.gov

APPLICATION NO.	FILING DATE	FIRST NAMED INVENTOR	ATTORNEY DOCKET NO.	CONFIRMATION NO.
12/189,839	08/12/2008	Harold John Hovel	DE920080035US1	7733

82531 7590 03/16/2010
Lieberman & Brandsdorfer, LLC
802 Still Creek Lane
Gaithersburg, MD 20878

EXAMINER
BERDICHEVSKY, MIRIAM

ART UNIT	PAPER NUMBER
1795	

MAIL DATE	DELIVERY MODE
03/16/2010	PAPER

Please find below and/or attached an Office communication concerning this application or proceeding.

The time period for reply, if any, is set in the attached communication.

UNITED STATES PATENT AND TRADEMARK OFFICE

Commissioner for Patents
United States Patent and Trademark Office
P.O. Box 1450
Alexandria, VA 22313-1450
www.uspto.gov

Lieberman & Brandsdorfer, LLC
802 Still Creek Lane
Gaithersburg MD 20878

MAR 16 2010

In re Application of	:	
Hovel et al.	:	DECISION ON PETITION
Application No. 12/189,839	:	TO MAKE SPECIAL UNDER
Filed: 8/12/2008	:	THE GREEN TECHNOLOGY
Attorney Docket No. **DE920080035US1**	:	PILOT PROGRAM

This is a decision on the petition under 37 CFR 1.102, filed 2/25/2010, to make the above-identified application special under the pilot program for applications pertaining to Green Technologies as set forth 74 Federal Register Notice 64666 (December 8, 2009).

The petition is **GRANTED**.

A grantable petition to make an application special under 37 CFR 1.102 and the pilot program as set forth in 74 FR 64666 must be directed to a nonprovisional application filed under 35 USC 111(a) or be a national stage entry under 35 USC 371, exclusive of any reissue applications and be filed prior to the date of the notice, December 8, 2009.

In order to qualify for special status, the following requirements must be met. 1) The application must be classified in one of the eligible US classifications listed in section VI of the notice. 2) The application must have no more than 3 independent claims and no more than 20 total claims. 3) The application must not contain any multiple dependent claims. 4) The petition must state the basis for seeking special status, i.e., the claimed invention either: A) materially enhances the quality of the environment or B) materially contributes to: i) the discovery or development of renewable energy resources, ii) the more efficient utilization and conservation of energy resources, or iii) greenhouse gas emission reduction. 5) If the disclosure is not clear on its face that the claimed invention materially contributes under category (A) or (B), the petition must be accompanied by a statement by the applicant, assignee, or an attorney/agent registered to practice before the Office explaining how the materiality standard is met. 6) A statement that applicant will agree to make an election without traverse in a telephonic interview if a restriction requirement is made by the examiner. 7) The petition to make special must be filed electronically. 8) The petition must be filed at least one day prior to the date that a first Office Action appears in the Patent Application Information Retrieval (PAIR) system. 9) The petition must be accompanied by a request for early publication in compliance with 37 CFR 1.219 and include the publication fee as set forth in 37 CFR 1.18(d).

The requirement for a fee for consideration of the petition to make special for applications pertaining to Green Technologies has been waived.

The instant petition complies with items 1 – 9 above. Accordingly, the above-identified application has been accorded "special" status.

Telephone inquires concerning this decision should be directed to Tom Dunn at 571-272-1171.

The application is being forwarded to the Technology Center Art Unit 1795 for action on the merits commensurate with this decision.

/Tom Dunn/

Tom Dunn
Quality Assurance Specialist
Technology Center 1700

UNITED STATES PATENT AND TRADEMARK OFFICE

Commissioner for Patents
United States Patent and Trademark Office
P.O. Box 1450
Alexandria, VA 22313-1450
www.uspto.gov

Pearne & Gordon LLP
1801 East 9th Street
Suite 1200
Cleveland OH 44114-3108

SEP 12 2008

In re Application of: Ganz
Serial No.: 12/189,907
Filed: August 12, 2008
Title: SYSYTEM AND METHOD FOR TOY ADOPTION AND MARKETING

DECISION ON PETITION TO MAKE SPECIAL FOR NEW APPLICATION UNDER 37 C.F.R. § 1.102 & M.P.E.P. § 708.02

This is a decision on the petition filed on August 12, 2008 to make the above-identified application special for accelerated examination procedure under 37 C.F.R. § 1.102(d).

The petition to make the application special is **DENIED**.

REGULATION AND PRACTICE

To be eligible for accelerated examination under 37 C.F.R. § 1.102(d) and pursuant to the "Change to Practice for Petitions in Patent Applications to Make Special and for Accelerated Examination" published in the Federal Register on June 26, 2006 (71 Fed. Reg. 36323), the following conditions must be satisfied:

1. The application must be a non-reissue utility or design application filed under 37 CFR 1.111(a);
2. The application, the petition and the required fees must be filed electronically using the USPTO's electronic filing system (EFS), or EFS-web; if not filed electronically, a statement asserting that EFS and EFS-web were not available during the normal business hours;
3. The application, at the time of filing, must be complete under 37 CFR 1.51 and in condition for examination;
4. The application must contain three or fewer independent claims and twenty or fewer total claims and the claims must be directed to a single invention.
5. The petition must be filed with the application.

The application as filed is not eligible for the accelerated examination under 37 C.F.R. § 1.102(d) because the application the application, at the time of filing, was not complete under 37 CFR 1.51 and in condition for examination, as evidenced by the mailing of the Notice to File Corrected Application Papers on August 15, 2008. See 71 Fed. Reg. 36323 notice, section VIII, Conditions for Examination. The opportunity to perfect a petition does not apply to applications that are not in condition for examination on filing. In particular, it is expected the drawings at filing to be in compliance with 37 CFR 1.84: notice, section VIII (F).

As noted in the policy statement referenced above, any petition to make special filed on or after the effective date must meet the new requirements set forth in the 71 Fed. Reg. 36323 notice.

For the above-stated reasons, the petition for Accelerated Examination, as set forth in MPEP 708.02(a) is **DENIED**. The application has been granted "special" status based upon applicant's age. The application is being forwarded to Technology Center Art Unit 3748 for assignment to an examiner and examination commensurate with MPEP 708.02, IV.

Any inquiry regarding this decision should be directed to J. Harrison, TC 3700 Special Program Examiner, at (571) 272-4449.

J. Harrison
Special Program Examiner
Technology Center 3700

UNITED STATES PATENT AND TRADEMARK OFFICE

Commissioner for Patents
United States Patent and Trademark Office
P.O. Box 1450
Alexandria, VA 22313-1450
www.uspto.gov

Pearne & Gordon LLP
1801 East 9th Street
Suite 1200
Cleveland OH 44114-3108

SEP 18 2008

In re Application of: Ganz
Serial No.: 12/189,907
Filed: August 12, 2008
Title: SYSYTEM AND METHOD FOR TOY ADOPTION AND MARKETING

DECISION ON PETITION TO MAKE SPECIAL FOR NEW APPLICATION UNDER 37 C.F.R. § 1.102 & M.P.E.P. § 708.02

This is a decision on the petition filed on August 12, 2008 to make the above-identified application special for accelerated examination procedure under 37 C.F.R. § 1.102(d). This decision supersedes the prior decision mailed September 12, 2008 which indicated the application had been made special due to age. That language was in error: this application remains in regular status.

The petition to make the application special is **DENIED**.

REGULATION AND PRACTICE

To be eligible for accelerated examination under 37 C.F.R. § 1.102(d) and pursuant to the "Change to Practice for Petitions in Patent Applications to Make Special and for Accelerated Examination" published in the Federal Register on June 26, 2006 (71 Fed. Reg. 36323), the following conditions must be satisfied:

1. The application must be a non-reissue utility or design application filed under 37 CFR 1.111(a);
2. The application, the petition and the required fees must be filed electronically using the USPTO's electronic filing system (EFS), or EFS-web; if not filed electronically, a statement asserting that EFS and EFS-web were not available during the normal business hours;
3. The application, at the time of filing, must be complete under 37 CFR 1.51 and in condition for examination;
4. The application must contain three or fewer independent claims and twenty or fewer total claims and the claims must be directed to a single invention.
5. The petition must be filed with the application.

The application as filed is not eligible for the accelerated examination under 37 C.F.R. § 1.102(d) because the application the application, at the time of filing, was not complete under 37 CFR 1.51 and in condition for examination, as evidenced by the mailing of the Notice to File Corrected Application Papers on August 15, 2008. See 71 Fed. Reg. 36323 notice, section VIII, Conditions for Examination. The opportunity to perfect a petition does not apply to applications that are not in condition for examination on filing. In particular, it is expected the drawings at filing to be in compliance with 37 CFR 1.84: notice, section VIII (F).

As noted in the policy statement referenced above, any petition to make special filed on or after the effective date must meet the new requirements set forth in the 71 Fed. Reg. 36323 notice.

For the above-stated reasons, the petition for Accelerated Examination, as set forth in MPEP 708.02(a) is **DENIED**.

Any inquiry regarding this decision should be directed to J. Harrison, TC 3700 Special Program Examiner, at (571) 272-4449.

J. Harrison
Special Program Examiner
Technology Center 3700

UNITED STATES PATENT AND TRADEMARK OFFICE

UNITED STATES DEPARTMENT OF COMMERCE
United States Patent and Trademark Office
Address: COMMISSIONER FOR PATENTS
P.O. Box 1450
Alexandria, Virginia 22313-1450
www.uspto.gov

APPLICATION NO.	FILING DATE	FIRST NAMED INVENTOR	ATTORNEY DOCKET NO.	CONFIRMATION NO.
12/189,907	08/12/2008	Howard Ganz	GANZ-36219US16	7845

7590 07/13/2009

Pearne & Gordon LLP
1801 East 9th Street
Suite 1200
Cleveland, OH 44114-3108

EXAMINER
AHMED, MASUD

ART UNIT	PAPER NUMBER
3714	

NOTIFICATION DATE	DELIVERY MODE
07/13/2009	ELECTRONIC

DECISION GRANTING PETITION UNDER 37 CFR 1.138(d)

The declaration of express abandonment is recognized

This is in response to the petition under 37 CFR 1.138(d), requesting for a refund of any previously paid search fee and excess claims fee in the above-identified application.

The petition is granted.

The express abandonment is recognized. Any previously paid search fee and excess claims fee are hereby refunded.

Telephone inquiries should be directed to the Office of Data Management at (571) 272-4200.

Nioni Farmer

Patent Publication Branch
Office of Data Management

Adjustment date: 07/13/2009 NFARMER
08/12/2008 INTEFSW 00005193 160820 12189907
02 FC:1111 510.00 CR

FORM PET651G (Rev. 08/07)

UNITED STATES PATENT AND TRADEMARK OFFICE

UNITED STATES DEPARTMENT OF COMMERCE
United States Patent and Trademark Office
Address: COMMISSIONER FOR PATENTS
P.O. Box 1450
Alexandria, Virginia 22313-1450
www.uspto.gov

APPLICATION NO.	FILING DATE	FIRST NAMED INVENTOR	ATTORNEY DOCKET NO.	CONFIRMATION NO.
12/189,911	08/12/2008	Hans-Juergen Eickelmann	DE920080020US1	7849

82531 7590 04/23/2010
Lieberman & Brandsdorfer, LLC
802 Still Creek Lane
Gaithersburg, MD 20878

EXAMINER
TOBERGTE, NICHOLAS J

ART UNIT	PAPER NUMBER
2823	

MAIL DATE	DELIVERY MODE
04/23/2010	PAPER

Please find below and/or attached an Office communication concerning this application or proceeding.

The time period for reply, if any, is set in the attached communication.

UNITED STATES PATENT AND TRADEMARK OFFICE

Commissioner for Patents
United States Patent and Trademark Office
P.O. Box 1450
Alexandria, VA 22313-1450
www.uspto.gov

Lieberman & Brandsdorfer, LLC
802 Still Creek Lane
Gaithersburg MD 20878

In re Application of	:	
EICKELMANN et al.	:	DECISION ON PETITION
Application No. 12/189,911	:	TO MAKE SPECIAL UNDER
Filed: 12 August 2008	:	THE GREEN TECHNOLOGY
Attorney Docket No. DE920080020US1	:	PILOT PROGRAM

This is a decision on the petition under 37 CFR 1.102, filed 20 April 2010, to make the above-identified application special under the pilot program for applications pertaining to Green Technologies as set forth 74 Federal Register Notice 64666 (December 8, 2009).

The petition is **GRANTED**.

A grantable petition to make an application special under 37 CFR 1.102 and the pilot program as set forth in 74 FR 64666 must be directed to a nonprovisional application filed under 35 USC 111(a) or be a national stage entry under 35 USC 371, exclusive of any reissue applications and be filed prior to the date of the notice, December 8, 2009.

In order to qualify for special status, the following requirements must be met. 1) The application must be classified in one of the eligible US classifications listed in section VI of the notice. 2) The application must have no more than 3 independent claims and no more than 20 total claims. 3) The application must not contain any multiple dependent claims. 4) The petition must state the basis for seeking special status, i.e., the claimed invention either: A) materially enhances the quality of the environment or B) materially contributes to: i) the discovery or development of renewable energy resources, ii) the more efficient utilization and conservation of energy resources, or iii) greenhouse gas emission reduction. 5) If the disclosure is not clear on its face that the claimed invention materially contributes under category (A) or (B), the petition must be accompanied by a statement by the applicant, assignee, or an attorney/agent registered to practice before the Office explaining how the materiality standard is met. 6) A statement that applicant will agree to make an election without traverse in a telephonic interview if a restriction requirement is made by the examiner. 7) The petition to make special must be filed electronically. 8) The petition must be filed at least one day prior to the date that a first Office Action appears in the Patent Application Information Retrieval (PAIR) system. 9) The petition must be accompanied by a request for early publication in compliance with 37 CFR 1.219 and include the publication fee as set forth in 37 CFR 1.18(d).

The requirement for a fee for consideration of the petition to make special for applications pertaining to Green Technologies has been waived.

The instant petition complies with items 1 – 9 above. Accordingly, the above-identified application has been accorded "special" status.

Telephone inquires concerning this decision should be directed to Lee W. Young at 571-272-4549.

The application is being forwarded to the Technology Center Art Unit 2823 for action on the merits commensurate with this decision.

Lee W. Young
Quality Assurance Specialist
Technology Center 2800

United States Patent and Trademark Office

~~Commissioner for Patents~~
United States Patent and Trademark Office
P.O. Box 1450
Alexandria, VA 22313-1450
www.uspto.gov

MAIL

SEP 17 2008
DIRECTOR'S OFFICE
TECHNOLOGY CENTER 2600

CANTOR COLBURN LLP - IBM RESEARCH TRIANGLE PARK
20 Church Street
22nd Floor
Hartford CT 06103

In re Application of:
KANGAS, PAUL D. et al
Serial No.: 12/189,944
Filed: August 12, 2008

Title: **RFID WIRELESS COMPUTER MOUSE**

DECISION ON PETITION TO MAKE SPECIAL FOR NEW APPLICATION UNDER 37 C.F.R. § 1.102 & M.P.E.P. § 708.02

This is a decision on the petition filed on August 12, 2008 to make the above-identified application special for accelerated examination procedure under 37 C.F.R. § 1.102(d).

The petition to make the application special is **GRANTED**.

The application is eligible for accelerated examination and the petition complies with the conditions for granting the application special status pursuant to the "Change to Practice for Petitions in Patent Applications to Make Special and for Accelerated Examination" published June 26, 2006, in the Federal Register. (71 Fed. Reg. 36323).

The prosecution of the instant application will be conducted expeditiously according to the following guidelines.

1. The application will be docketed to an examiner and taken up for action within two weeks of the date of this decision.

2. Restriction Practice:
   If the examiner determines that the claims are not directed to a single invention, a telephone request to elect one single invention will be made pursuant to MPEP 812.01. As a prerequisite to the grant of this petition, the applicant has agreed to make an oral election, by telephone, without traverse. If the applicant refuses to make an election without traverse, or the examiner cannot reach the applicant after a reasonable effort, the examiner will treat the first claimed invention (invention defined by claim 1) as having being constructively elected without traverse for examination.

3. Office action:

If it is determined that, after appropriate consultation, there is a potential rejection or any other issue to be addressed, the examiner will telephone the applicant and arrange an interview to discuss and resolve the issue. An Office action, other than a Notice of Allowance and Fee(s) Due (Notice of Allowance), will not be issued unless either: 1) an interview was conducted but did not result in agreed to action that places the application in condition for allowance, or, 2) a determination is made that an interview would be unlikely to result in the application being placed in condition for allowance, and 3) an internal conference has been held to review any rejection of any claim.

4. Time for Reply:
An Office action other than a Notice of Allowance or a final Office action will set a shortened statutory period of one month or thirty days, whichever is longer, for reply with no extension of time available under 37 CFR 1.136(a). Failure to timely file a reply within this non-extendible period for reply will result in the abandonment of the application.

5. Reply by Applicant:
A timely reply to an Office action other than the Notice of Allowance must be submitted electronically via EFS or EFS-web and limited to addressing the rejections, objections and requirement made. Any amendment that attempts to: 1) add claims which would result in more than three pending independent claims or more than twenty pending total claims; 2) present claims not encompassed by the pre-examination search or an updated accelerated examination support document; or 3) present claims that are directed a non-elected invention or an invention other than that previously claimed and examined in the application, will be treated as not fully responsive and will not be entered.

   For any amendment to the claims (including any new claim) that is not encompassed by the accelerated examination support document, applicant must provide an updated accelerated examination support document that encompasses the amended or new claims at the time of filing of the amendment.

   To proceed expeditiously with the examination, it is recommended that a reply with amendments made to any claim or with any new claim being added be accompanied by an updated accelerated examination support document or a statement explaining how the amended or new claim is supported by the original accelerated examination support document.

6. Information Disclosure Statement (IDS):
Any IDS filed during prosecution must be submitted electronically via EFS or EFS-web, accompanied by an updated accelerated examination support document, and be in compliance with 37 CFR 1.97 and 1.98.

7. Post-Allowance Processing:
To expedite processing of the allowed application into a patent, the applicant must: 1) pay the required fees within one month of the date of the Notice of Allowance, and 2) not file any post allowance papers not required by the Office. In no event may the issue fee be paid and accepted later than three months from the date of the Notice of Allowance.

8. After-Final and Appeal Procedures:
   To expedite prosecution, after receiving the final Office action, applicant must: 1) promptly file a notice of appeal, an appeal brief and appeal fees; and 2) not request a pre-appeal brief conference.

   Any amendment, affidavit or other evidence filed after final Office action must comply with applicable rules and the requirements outlined in numbered paragraphs 5 and 6 above.

   On appeal, the application will proceed according to normal appeal procedures. After appeal, the application will again be treated special.

9. Proceedings Outside the Normal Examination Process:
   If the application becomes involved in a proceeding that is outside the normal examination process (e.g., a secrecy order, national security review, interference proceeding, petitions under 37 CFR 1.181, 182 or 183), the application will be treated special before and after such proceeding.

10. Final Disposition:
    The twelve month goal of this accelerated examination procedure ends with a final disposition. The mailing of a final Office action, a Notice of Allowance, the filing of a Notice of Appeal, or the filing of a Request for Continued Examination (RCE) is the final disposition.

If, during prosecution, a paper is not filed electronically using EFS-web, a reply is filed but is not fully responsive, the application is involved in an appeal, or a proceeding outside normal examination process, the application will still be examined expeditiously, however, the final disposition may occur more than twelve months from the filing of the application.

Any inquiry regarding this decision should be directed to Michael Horabik, Quality Assurance Specialist, at (571) 272-3068.

Michael Horabik
Quality Assurance Specialist
Technology Center 2600
Communications

UNITED STATES PATENT AND TRADEMARK OFFICE

Commissioner for Patents
United States Patent and Trademark Office
P.O. Box 1450
Alexandria, VA 22313-1450
www.uspto.gov

MAILED

APR 12 2010

OFFICE OF PETITIONS

THE NATH LAW GROUP
112 South West Street
Alexandria VA 22314

In re Application of	:	
Moon Suk Kim	:	
Application No. 12/189,951	:	DECISION ON PETITION
Filed: August 12, 2008	:	TO WITHDRAW
Attorney Docket No. 31109-11	:	FROM RECORD
	:	

This is a decision on the Request to Withdraw as attorney or agent under 37 C.F.R. § 1.36(b) filed January 29, 2010.

The request is **NOT APPROVED**.

The Office will no longer approve requests from practitioners to withdraw from applications where the requesting practitioner is acting, or has acted, in a representative capacity pursuant to 37 CFR 1.34. In these situations, the practitioner is responsible for the correspondence the practitioner files in the application while acting in a representative capacity. As such, there is no need for the practitioner to obtain the Office's permission to withdraw from representation.. However, practitioners acting in a representative capacity, like practitioners who have a power of attorney in the application, remain responsible for noncompliance with 37 CFR 1.56, as well as 37 CFR 10.18, with respect to documents they file.

A review of the file record indicates that Joshua B. Goldberg does not have power of attorney in this patent application. See 37 C.F.R. § 10.40. Accordingly, the request to withdraw under 37 C.F.R. § 1.36(b) is not applicable.

All future communications from the Office will continue to be directed to the above-identified address until otherwise properly notified by the applicant.

Telephone inquires concerning this decision should be directed to the undersigned at 571-272-4618

/Kimberly Inabinet/
Kimberly Inabinet
Petitions Examiner
Office of Petitions

UNITED STATES PATENT AND TRADEMARK OFFICE

UNITED STATES DEPARTMENT OF COMMERCE
United States Patent and Trademark Office
Address: COMMISSIONER FOR PATENTS
P.O. Box 1450
Alexandria, Virginia 22313-1450
www.uspto.gov

APPLICATION NO.	FILING DATE	FIRST NAMED INVENTOR	ATTORNEY DOCKET NO.	CONFIRMATION NO.
12/189,960	08/12/2008	Christian Becker	DE920080021US1	7949

82531 7590 03/16/2010
Lieberman & Brandsdorfer, LLC
802 Still Creek Lane
Gaithersburg, MD 20878

EXAMINER
BERDICHEVSKY, MIRIAM

ART UNIT	PAPER NUMBER
1795	

MAIL DATE	DELIVERY MODE
03/16/2010	PAPER

Please find below and/or attached an Office communication concerning this application or proceeding.

The time period for reply, if any, is set in the attached communication.

UNITED STATES PATENT AND TRADEMARK OFFICE

Commissioner for Patents
United States Patent and Trademark Office
P.O. Box 1450
Alexandria, VA 22313-1450
www.uspto.gov

Lieberman & Brandsdorfer, LLC
802 Still Creek Lane
Gaithersburg MD 20878

MAR 16 2010

In re Application of	:	
Becker et al.	:	DECISION ON PETITION
Application No. 12/189,960	:	TO MAKE SPECIAL UNDER
Filed: 8/12/2008	:	THE GREEN TECHNOLOGY
Attorney Docket No. **DE920080021US1**	:	PILOT PROGRAM

This is a decision on the petition under 37 CFR 1.102, filed 2/25/2010, to make the above-identified application special under the pilot program for applications pertaining to Green Technologies as set forth 74 Federal Register Notice 64666 (December 8, 2009).

The petition is **GRANTED**.

A grantable petition to make an application special under 37 CFR 1.102 and the pilot program as set forth in 74 FR 64666 must be directed to a nonprovisional application filed under 35 USC 111(a) or be a national stage entry under 35 USC 371, exclusive of any reissue applications and be filed prior to the date of the notice, December 8, 2009.

In order to qualify for special status, the following requirements must be met. 1) The application must be classified in one of the eligible US classifications listed in section VI of the notice. 2) The application must have no more than 3 independent claims and no more than 20 total claims. 3) The application must not contain any multiple dependent claims. 4) The petition must state the basis for seeking special status, i.e., the claimed invention either: A) materially enhances the quality of the environment or B) materially contributes to: i) the discovery or development of renewable energy resources, ii) the more efficient utilization and conservation of energy resources, or iii) greenhouse gas emission reduction. 5) If the disclosure is not clear on its face that the claimed invention materially contributes under category (A) or (B), the petition must be accompanied by a statement by the applicant, assignee, or an attorney/agent registered to practice before the Office explaining how the materiality standard is met. 6) A statement that applicant will agree to make an election without traverse in a telephonic interview if a restriction requirement is made by the examiner. 7) The petition to make special must be filed electronically. 8) The petition must be filed at least one day prior to the date that a first Office Action appears in the Patent Application Information Retrieval (PAIR) system. 9) The petition must be accompanied by a request for early publication in compliance with 37 CFR 1.219 and include the publication fee as set forth in 37 CFR 1.18(d).

The requirement for a fee for consideration of the petition to make special for applications pertaining to Green Technologies has been waived.

The instant petition complies with items 1 – 9 above. Accordingly, the above-identified application has been accorded "special" status.

Telephone inquires concerning this decision should be directed to Tom Dunn at 571-272-1171.

The application is being forwarded to the Technology Center Art Unit 1795 for action on the merits commensurate with this decision.

/Tom Dunn/

Tom Dunn
Quality Assurance Specialist
Technology Center 1700

UNITED STATES PATENT AND TRADEMARK OFFICE

Commissioner for Patents
United States Patent and Trademark Office
P.O. Box 1450
Alexandria, VA 22313-1450
www.uspto.gov

In re Application of
Ronald J. French

Application No. 12189996

Filed: August 12,2008

Attorney Docket No. A08148US (25310.6)

:DECISION ON PETITION TO MAKE SPECIAL
:UNDER 37 CFR 1.102(c)(1)

This is a decision on the electronic petition under 37 CFR 1.102 (c)(1), filed 20-JAN-2009 to make the above-identified application special based on applicant's age as set forth in MPEP § 708.02, Section IV.

The petition is **GRANTED**.

A grantable petition to make an application special under 37 CFR 1.102(c)(1), MPEP § 708.02, Section IV: Applicant's Age must include a statement by applicant or a registered practitioner having evidence that applicant is at least 65 years of age. No fee is required.

Accordingly, the above-identified application has been accorded "special" status and will be taken up for action by the examiner upon the completion of all pre-examination processing.

Telephone inquiries concerning this electronic decision should be directed to the Electronic Business Center at 866-217-9197.

All other inquiries concerning either the examination or status of the application should be directed to the Technology Center.

UNITED STATES PATENT AND TRADEMARK OFFICE

Commissioner for Patents
United States Patent and Trademark Office
P.O. Box 1450
Alexandria, VA 22313-1450
www.uspto.gov

TERADYNE, INC.
C/O FOLEY & LARDNER LLP
111 HUNTINGTON AVENUE
26TH FLOOR
BOSTON, MA 02199-7610

MAILED

JUN 09 2010

OFFICE OF PETITIONS

In re Application of	:	
Srinivasan et al.	:	DECISION ON PETITION
Application No. 12/190,035	:	TO WITHDRAW
Filed: August 12, 2008	:	FROM RECORD
Attorney Docket No. T0529.70095US00	:	

This is a decision on the Request to Withdraw as attorney or agent of record under 37 C.F.R. § 1.36(b), filed April 23, 2010.

The request is **NOT APPROVED** because it is moot.

A review of the file record indicates that on April 26, 2010 the power of attorney to Foley and Lardner LLP was revoked by the assignee of the patent application. Accordingly, the request to withdraw under 37 C.F.R. § 1.36(b) is moot.

All future communications from the Office will be directed to the below-listed address until otherwise notified by applicant.

Telephone inquires concerning this decision should be directed to the undersigned at 571-272-7751. All other inquires concerning either the examination or status of the application should be directed to the Technology Center.

Joan Olszewski
Petitions Examiner
Office of Petitions

cc: TERADYNE, INC.
c/o WOLF, GREENFIELD & SACKS, P.C.
600 ATLANTIC AVENUE
BOSTON MA 02210-2206

UNITED STATES PATENT AND TRADEMARK OFFICE

UNITED STATES DEPARTMENT OF COMMERCE
United States Patent and Trademark Office
Address: COMMISSIONER FOR PATENTS
P.O. Box 1450
Alexandria, Virginia 22313-1450
www.uspto.gov

APPLICATION NO.	FILING DATE	FIRST NAMED INVENTOR	ATTORNEY DOCKET NO.	CONFIRMATION NO.
12/190,098	08/12/2008	Reto Josef Hermann	CH920080023US1	8183

78675 7590 10/21/2008
DUKE W. YEE
YEE & ASSOCIATES, P.C.
P.O. BOX 802333
DALLAS, TX 75380

EXAMINER

ART UNIT	PAPER NUMBER
2131	

NOTIFICATION DATE	DELIVERY MODE
10/21/2008	ELECTRONIC

Please find below and/or attached an Office communication concerning this application or proceeding.

The time period for reply, if any, is set in the attached communication.

Notice of the Office communication was sent electronically on above-indicated "Notification Date" to the following e-mail address(es):

ptonotifs@yeeiplaw.com

UNITED STATES PATENT AND TRADEMARK OFFICE

Commissioner for Patents
United States Patent and Trademark Office
P.O. Box 1450
Alexandria, VA 22313-1450
www.uspto.gov

MAILED

OCT 2 0 2008

TECHNOLOGY CENTER 2100

Duke W Yee
Yee, Yee & Associates P.C.
P. O. Box 802333
Dallas TX 75380

In re Application of:
Hermann et el.
Serial No.: 12190,098
Filed: August 12, 2008
Docket: CH920080023US1
Title: Kinematic Based Authentication

DECISION ON PETITION TO MAKE SPECIAL FOR NEW APPLICATION UNDER 37 C.F.R. § 1.102 & M.P.E.P. § 708.02

This is a decision on the petition filed on August 12, 2008 to make the above-identified application special for accelerated examination procedure under 37 C.F.R. § 1.102(d).

The petition to make the application special is **DENIED**.

REGULATION AND PRACTICE

To be eligible for accelerated examination under 37 C.F.R. § 1.102(d) and pursuant to the "Change to Practice for Petitions in Patent Applications to Make Special and for Accelerated Examination" published in the Federal Register on June 26, 2006 (71 Fed. Reg. 36323), the following conditions must be satisfied:

1. The application must be a non-reissue utility or design application filed under 37 CFR 1.111(a);
2. The application, the petition and the required fees must be filed electronically using the USPTO's electronic filing system (EFS), or EFS-web; if not filed electronically, a statement asserting that EFS and EFS-web were not available during the normal business hours;
3. The application, at the time of filing, must be complete under 37 CFR 1.51 and in condition for examination;
4. The application must contain three or fewer independent claims and twenty or fewer total claims and the claims must be directed to a single invention;
5. The petition must be filed with the application.

The application as filed is not eligible for the accelerated examination under 37 C.F.R. § 1.102(d) because it is a utility application filed under 37 CFR 1.111(a) and was not complete.

The Notice of omitted materials mailed on August 21, 2008 is evidence that the application was not complete and in condition for examination at the time of filing.

For the above-stated reasons, the petition is denied. The application will therefore be taken up by the examiner for action in its regular turn.

Any inquiry regarding this decision should be directed to the undersigned at (571) 272-3612. If attempts to reach the undersigned are unsuccessful, Kim Huynh., Quality Assurance Specialist can be reached at (571) 272-4147.

/Tod Swann/

Quality Assurance Specialist

Technology Center 2400

UNITED STATES PATENT AND TRADEMARK OFFICE

Commissioner for Patents
United States Patent and Trademark Office
P.O. Box 1450
Alexandria, VA 22313-1450
www.uspto.gov

FRISHAUF, HOLTZ, GOODMAN & CHICK, PC
220 Fifth Avenue
16TH Floor
NEW YORK NY 10001-7708

MAILED

APR 12 2010

OFFICE OF PETITIONS

In re Patent No. 7,585,698	:	
Issue Date: September 8, 2009	:	
Application No. 12/190,102	:	DECISION ON PETITION
Filed: August 12, 2008	:	
Attorney Docket No. **06396D/LH**	:	

This is a decision on the petition January 25, 2010, requesting issuance of a duplicate Letters Patent for the above-identified patent that is being considered under 37 CFR 1.182.

The petition under 37 CFR 1.182 is **GRANTED**.

The Office of Data Management is directed to issue duplicate Letters Patent.

As authorized, the $400 fee for the petition under 37 CFR 1.182 has been assessed to petitioner's deposit account.

A copy of this decision is being forwarded to the Office of Data Management for issuance of the duplicate Letters Patent.

Any questions concerning this matter may be directed to the undersigned at (571) 272-4584. Any questions concerning issuance of the duplicate Letters Patent should be directed to Niomi Farmer at (703)756-1556.

JoAnne Burke
Petitions Examiner
Office of Petitions

cc: Niomi Farmer, P/ODM, Randolph Square Building, 9th Floor, 09/D30-B
FAX No. (571) 270-9753

UNITED STATES PATENT AND TRADEMARK OFFICE

Commissioner for Patents
United States Patent and Trademark Office
P.O. Box 1450
Alexandria, VA 22313-1450
www.uspto.gov

LEXYOUME IP GROUP, LLC
5180 PARKSTONE DRIVE, SUITE 175
CHANTILLY VA 20151

COPY MAILED
SEP 30 2008
OFFICE OF PETITIONS

In re Application of :
Moon, et al. :
Application No. 12/190,124 : ON PETITION
Filed: August 12, 2008 :
Attorney Docket No. LPP080156US :

This decision is in response to the "PETITION AND AMENDMENT UNDER 37 CFR 1.57(a), filed September 19, 2008, requesting that the above-referenced application be accorded a filing date of August 12, 2008. This petition is being treated pursuant to 37 CFR 1.53(e)(2)[1].

Application papers in the above-identified application were deposited on August 12, 2008. However, on September 3, 2008, the Office of Data Management mailed applicants a "Notice of Incomplete Nonprovisional Application," notifying applicants that the application papers had not been accorded a filing date because the application was deposited without drawings. In response, applicants timely filed this petition. Applicants request that the application be amended to include the inadvertently omitted drawings on the basis that the application as filed contained a prior benefit claim under 37 CFR 1.55 or 1.78.

Petitioner's arguments and evidence have been considered. However, a review of the application confirms that, as filed, the application contained at least one composition claim. MPEP 601.01(f) provides that:

> It has been USPTO practice to treat an application that contains at least one process or method claim as an application for which a drawing is not necessary for an understanding of the invention under 35 U.S.C. 113 (first sentence).

The same practice has been followed in composition applications.

Thus, pursuant to § 601.01(f), a drawing is not considered essential for a filing date. The instant application is entitled to a filing date without drawings present in the application.

Accordingly, the Office should have granted the application a filing date and mailed a Notice of Omitted Items instead of a Notice of Incomplete Nonprovisional Application. As stated in

[1] Any request for review of a notification pursuant to paragraph (e)(1) of this section, or a notification that the original application papers lack a portion of the specification or drawing(s), must be by way of a petition pursuant to this paragraph accompanied by the fee set forth in § 1.17(f). In the absence of a timely (§ 1.181(f)) petition pursuant to this paragraph, the filing date of an application in which the applicant was notified of a filing error pursuant to paragraph (e)(1) of this section will be the date the filing error is corrected.

MPEP 601.01(g) under the section entitled, "Application Entitled to a Filing Date," applicant may submit an amendment to include the inadvertently omitted portion of the drawing(s) pursuant to 37 CFR 1.57(a):

> [i]f an application was filed on or after September 21, 2004, and contains a claim under 37 CFR 1.55 for priority of a prior-filed foreign application, or a claim under 37 CFR 1.78 for the benefit of a prior-filed provisional, nonprovisional, or international application that was present on the filing date of the application, and the omitted portion of the drawing(s) was inadvertently omitted from the application and is completely contained in the prior-filed application[.]

Please note that no petition is required and that the amendment must comply with 37 CFR 1.57(a) and 37 CFR 1.121. See MPEP § 201.17. Any amendment to include the inadvertently omitted drawing(s) will be considered by the examiner.

To the extent the instant petition requests a filing date of August 12, 2008 with no drawings present in the application, the petition is **GRANTED**.

Given the basis for granting this petition, the petition fee is being refunded.

Pursuant to this decision, the application will be referred to Office of Patent Application Processing for:

- **correction of the filing date to August 12, 2008**;
- **for indication in Office records, as appropriate, that "0" sheets of drawings were present on filing** and
- **for issuance of a filing receipt.**

Entry of the amendment filed September 19, 2008 will be determined by the examiner.

Telephone inquiries concerning this matter may be directed to Petitions Attorney Alesia M. Brown at (571) 272-3205.

Anthony Knight
Supervisor
Office of Petitions

UNITED STATES PATENT AND TRADEMARK OFFICE

UNITED STATES DEPARTMENT OF COMMERCE
United States Patent and Trademark Office
Address: COMMISSIONER FOR PATENTS
P.O. Box 1450
Alexandria, Virginia 22313-1450
www.uspto.gov

RIDOUT & MAYBEE LLP
225 KING STREET WEST
10TH FLOOR
TORONTO, ON M5V 3M2
CANADA

Mail Date: 05/14/2010

Applicant	: Hamid Ould-Brahim	: DECISION ON REQUEST FOR
Patent Number	: 7646732	: RECALCULATION of PATENT
Issue Date	: 01/12/2010	: TERM ADJUSTMENT IN VIEW
Application No	: 12/190,146	: OF WYETH AND NOTICE OF INTENT TO
Filed	: 08/12/2008	: ISSUE CERTIFICATE OF CORRECTION
		:

The Request for Recalculation is **GRANTED** to the extent indicated.

The patent term adjustment has been determined to be **0** days. The USPTO will *sua sponte* issue a certificate of correction reflecting the amount of PTA days determined by the recalculation.

Prior to the issuance of the certificate of correction, the USPTO will afford patentee an opportunity to be heard and request reconsideration. Accordingly, patentee has **one month or thirty (30) days**, whichever is longer, to file a request for reconsideration of this patent term adjustment calculation. See 35 U.S.C. 154(b)(3)(B)(ii) and 37 CFR 1.322(a)(4). No extensions of time will be granted under 37 CFR 1.136.

Patentee should use document code PET.OP if electronically filing a request for reconsideration of this patent term adjustment calculation. The patentee must also include the information required by 37 CFR 1.705(b)(2) and the fee required by 37 CFR 1.18(e). If patentee does not file a timely request for reconsideration of this patent term adjustment calculation including the information required by 37 CFR 1.705(b)(2) and the fee required by 37 CFR 1.18(e), the USPTO will issue a certificate of correction reflecting the PTA determination noted above.

Patentee should be aware that in order to preserve the right to review in the United States District Court for the District of Columbia of the USPTO patent term adjustment determination, patentee must ensure that he or she also take the steps required under 35 U.S.C. 154(b)(4)(A) in a timely manner. Nothing in the request for recalculation should be construed as providing an alternative time frame for commencing a civil action under 35 U.S.C. 154(b)(4)(A).

Any questions concerning this decision should be directed to the Office of Patent Legal Administration at 571-272-7702.

UNITED STATES PATENT AND TRADEMARK OFFICE

Commissioner for Patents
United States Patent and Trademark Office
P.O. Box 1450
Alexandria, VA 22313-1450
www.uspto.gov

EDWARD Y. LIN
SNELL & WILMER L.L.P.
SUITE 1400
600 ANTON BOULEVARD
COSTA MESA CA 92626

MAILED

APR 27 2009

OFFICE OF PETITIONS

In re Application of

COOPER, John
Application No. 12/190,154
Filed: August 12, 2008
Attorney Docket No. **53579-0100**

DECISION ON PETITION
TO WITHDRAW
FROM RECORD

This is a decision on the Request to Withdraw as attorney or agent of record under 37 C.F.R. § 1.36(b), filed March 27, 2009.

The request is **NOT APPROVED**.

The Office has revised its change in procedure for request to withdraw from representation applies to requests filed on or after May 12, 2008.

A grantable request to withdraw as attorney/agent of record must be signed by every attorney/agent seeking to withdraw or contain a clear indication that one attorney is signing on behalf of another/others. The Office requires the practitioner(s) requesting withdrawal to certify that he, she, or they have: (1) given reasonable notice to the client, prior to the expiration of the response period, that the practitioner(s) intends to withdraw from employment; (2) delivered to the client or a duly authorized representative of the client all papers and property (including funds) to which the client is entitled; and (3) notified the client of any responses that may be due and the time frame within which the client must respond, pursuant 37 CFR 10.40(c).

The request cannot be approved because there is no indication that act (3) noted in the above-identified certifications have been performed.

All future communications from the Office will continue to be directed to the above-listed address until otherwise notified by applicant.

Telephone inquiries concerning this decision should be directed to Tredelle Jackson at 571-272- 2783.

Tredelle D. Jackson
Paralegal Specialist
Office of Petitions

cc: **JOHN COOPER**
4651 RHAPSODY DRIVE
HUNTINGTON BEACH CA 92649

UNITED STATES PATENT AND TRADEMARK OFFICE

Commissioner for Patents
United States Patent and Trademark Office
P.O. Box 1450
Alexandria, VA 22313-1450
www.uspto.gov

COPY MAILED

MAY 26 2009

OFFICE OF PETITIONS

SNELL & WILMER LLP (OC)
600 ANTON BOULEVARD
SUITE 1400
COSTA MESA, CA 92626

In re Application of

John COOPER
Application No. 12/190,154
Filed: August 12, 2008
Attorney Docket No. **53579-0100**

DECISION ON PETITION
TO WITHDRAW
FROM RECORD

This is a decision on the Request to Withdraw as attorney or agent of record under 37 C.F.R. § 1.36(b), filed May 01, 2009.

The request is **APPROVED**.

A grantable request to withdraw as attorney/agent of record must be signed by every attorney/agent seeking to withdraw or contain a clear indication that one attorney is signing on behalf of another/others. The Office requires the practitioner(s) requesting withdrawal to certify that he, she, or they have: (1) given reasonable notice to the client, prior to the expiration of the response period, that the practitioner(s) intends to withdraw from employment; (2) delivered to the client or a duly authorized representative of the client all papers and property (including funds) to which the client is entitled; and (3) notified the client of any responses that may be due and the time frame within which the client must respond, pursuant 37 CFR 10.40(c).

The request was signed by Edward Lin on behalf of all attorneys of record who are associated with customer No. 21611. All attorneys/agents associated with the Customer Number 21611 have been withdrawn. Applicant is reminded that there is no attorney of record at this time.

All future correspondence will be directed to the inventor John Cooper at the address indicated below.

Telephone inquiries concerning this decision should be directed to Tredelle Jackson at 571-272-2783.

Tredelle D. Jackson
Paralegal Specialist
Office of Petitions

cc: **JOHN COOPER**
4651 RHAPSODY DRIVE
HUNTINGTON BEACH CA 92649

UNITED STATES PATENT AND TRADEMARK OFFICE

UNITED STATES DEPARTMENT OF COMMERCE
United States Patent and Trademark Office
Address: COMMISSIONER FOR PATENTS
P.O. Box 1450
Alexandria, Virginia 22313-1450
www.uspto.gov

APPLICATION NO.	FILING DATE	FIRST NAMED INVENTOR	ATTORNEY DOCKET NO.	CONFIRMATION NO.
12/190,180	08/12/2008	Denise L. Conrad	1041.014	8336

79464 7590 12/01/2008
Weitzman Law Offices LLC
425 Eagle Rock Avenue
Suite 102
Roseland, NJ 07068

EXAMINER
TRAMMELL, JAMES P

ART UNIT	PAPER NUMBER
3694	

MAIL DATE	DELIVERY MODE
12/01/2008	PAPER

Please find below and/or attached an Office communication concerning this application or proceeding.

The time period for reply, if any, is set in the attached communication.

UNITED STATES PATENT AND TRADEMARK OFFICE

Commissioner for Patents
United States Patent and Trademark Office
P.O. Box 1450
Alexandria, VA 22313-1450
www.uspto.gov

Weitzman Law Offices LLC
425 Eagle Rock Avenue
Suite 102
Roseland NJ 07068

In re application of	:	**DECISION ON PETITION**
Conrad et al.	:	**TO MAKE SPECIAL FOR**
Application No. 12/190,180	:	**NEW APPLICATION**
Filed: August 12, 2008	:	**UNDER 37 CFR 1.102**

For: METHOD AND SYSTEM FOR OBTAINING AN INVOICE OUTSOURCING AGREEMENT

This is a decision on the petition filed on August 12, 2008 to make the above-identified application special for accelerated examination procedure under 37 C.F.R. § 1.102(d).

The petition to make the application special is **DISMISSED**.

REGULATION AND PRACTICE

A grantable petition to make special under 37 C.F.R. § 1.102(d) and pursuant to the "Change to Practice for Petitions in Patent Applications to Make Special and for Accelerated Examination" published in the Federal Register on June 26, 2006 (71 Fed. Reg. 36323), must satisfy the following conditions:

I. Conditions Regarding the Application:

1. the application must be a non-reissue utility or design application filed under 37 CFR 1.111(a);
2. the application, the petition and the required fees must be filed electronically using the USPTO's electronic filing system (EFS), or EFS-web; if not filed electronically, a statement asserting that EFS and EFS-web were not available during the normal business hours.
3. at the time of filing, the application must be complete under 37 CFR 1.51 and in condition for examination;
4. the application must contain three or fewer independent claims and twenty or fewer total claims and the claims must be directed to a single invention.

II. Conditions Regarding the Petition:

The petition must:

1. be filed with the application;

2. include a statement that applicant agrees not to separately argue the patentability of any independent claim during any appeal in the application;

3. include a statement that applicant agrees to make an election without traverse in a telephone interview.

4. include a statement that applicant agrees to conduct such an interview when requested by the examiner.

5. include a statement, made based on a good faith belief, that a preexamination search in compliance with the following requirements, was conducted, including an identification of the field of search by United States class and subclass, where applicable, and for database searches, the search logic or chemical structure or sequence used as a query, the name of the file(s) searched and the database service, and the date of the search.

The preexamination search must:

5.1 involve U.S. patents and patent application publications, foreign patent documents, and non-patent literature, unless the applicant can justify with reasonable certainty that no references more pertinent than those already identified are likely to be found in the eliminated sources and includes such a justification with this statement;

5.2. be directed to the claimed invention and encompass all of the features of the claims, giving the claims the broadest reasonable interpretation;

5.3. encompass the disclosed features that may be claimed.

6. must provide in support of the petition an accelerated examination support document.

An accelerated examination support document must include:

6.1. an information disclosure statement (IDS) in compliance with 37 CFR 1.98 citing each reference deemed most closely related to the subject matter of each of the claims;

6.2. an identification of all the limitations in the claims that are disclosed by the reference specifying where the limitation is disclosed in the cited reference;

6.3. a detailed explanation of how each of the claims is patentable over the references cited with particularity required by 37 CFR 1.111(b) and (c);

6.4. a concise statement of the utility of the invention as defined in each of the independent claims (unless the application is a design application);

6.5. a showing of where each limitation of the claims finds support under 35 USC 112, first paragraph, in the written description of the specification. If applicable, the showing must also identify: (1) each means- (or step) plus-function claim element that invokes consideration under 35 USC 112, sixth paragraph; and (2) the structure, material, or acts in the specification that corresponds to each means- (or step) plus-function claim element that invokes consideration under 35 USC 112, sixth paragraph; if the application claims the benefit of one or more applications

under title 35, United States Code, the showing must also include where each limitation of the claims finds support under 35 USC 112, first paragraph, in each such application in which such supports exists;

6.6. an identification of any cited references that may be disqualified under 35 USC 103(c).

REVIEW OF FACTS

The petition in this case fails to comply with conditions II.5, II.5.1 and II.5.2.

Regarding Condition II.5, it is required that Applicant include a statement, made based on a good faith belief, that a preexamination search in compliance with the following requirements, was conducted, including an identification of the field of search by United States class and subclass, where applicable, and for database searches, the search logic or chemical structure or sequence used as a query, the name of the file(s) searched and the database service, and the date of the search. Page 2 of the preexamination search document indicates that the FAMPAT database service was searched, but does not include which specific database files were searched. Similarly, page 3 of the preexamination search document indicates that the Google Patent Search database service was searched, but does not include which specific database files were searched (e.g., US patents or patent application publications or both).

Regarding Condition II.5.1, it is required that Applicant's search involve U.S. patents and patent application publications, foreign patent documents, and non-patent literature, unless the applicant can justify with reasonable certainty that no references more pertinent than those already identified are likely to be found in the eliminated sources and includes such a justification with this statement. As a result of the deficiencies found regarding condition II.5, it's not clear from the preexamination search document if U.S. patents and patent application publications and foreign patent documents (e.g., EPO, JPO, WIPO databases) were text searched.

As per Condition II.5.2, the preexamination search must be directed to the claimed invention and encompass all of the features of the claims, giving the claims the broadest reasonable interpretation. While Applicant conducted searches giving the claims the broadest reasonable interpretation, Applicant did not search all of the claimed features. In particular, Applicant did not search the features he indicated as patentable in section 9(C) of the support document such as: "associating a set of suppliers with a user," "configuring a country-to-country relationship database table to identify purchasing tax country and tax country relationships that require the agreement authorizing a digital signature prior to invoicing," "querying the country-to-country relationship database table for any combination of purchasing tax country and tax country from the lists of purchasing tax countries and tax countries that requires the agreement

authorizing a digital signature prior to invoicing," "electronically presenting the user with the agreement if any combination of purchasing tax country and tax country from the lists of purchasing tax countries and tax countries requires the agreement authorizing a digital signature prior to invoicing" and "confirming that the user has accepted the agreement before an invoice is created involving a purchasing tax country and tax country relationship that requires the agreement authorizing a digital signature prior to invoicing." It is important that Applicant more thoroughly search these features in all of the suggested databases (e.g., U.S. patents and patent application publications, foreign patent documents, and non-patent literature) in order to make a patentability determination with greater confidence.

A recommended search query for the feature, "confirming that the user has accepted the agreement before an invoice is created involving a purchasing tax country and tax country relationship that requires the agreement authorizing a digital signature prior to invoicing," that may be executed in all databases of East is as follows:

> L1 ((approv$3 or accept$4 or endors$5 or confirm$6) near5 (contract$1 or agreement$1)) and ((before or prior) near5 (invoic$3 or bill$3)) and tax$6 and ((digital$2 or electronic$4) near5 sign$6)

Please keep in mind that this is a non-limiting search suggestion and is only meant to serve as a possible starting point for Applicant's preexamination search for the specific feature of "confirming that the user has accepted the agreement before an invoice is created involving a purchasing tax country and tax country relationship that requires the agreement authorizing a digital signature prior to invoicing." Merely copying and pasting the suggested search will not satisfy the requirement. Additional searches for the remaining features Applicant asserted as patentable are also required. Additional guidance regarding the proper manner of performing and documenting a preexamination search may be found on the following web site: http://www.uspto.gov/web/patents/accelerated/ Applicant is expected to perform more supplemental searches than the sample search query listed above.

Additionally with regard to Condition II.5.2, it appears that Applicant has overly narrowed some of the searches by limiting text searches with a particular classification (see FAMPAT search logic on page 2 of the search document). Applicant can avoid inadvertently overly narrowing search results by conducting text searching without including any classification limitations.

The petition fails to meet the required conditions to be accorded special status under the accelerated examination procedure.

DECISION

For the above stated reasons, the petition is **DISMISSED**. The application will therefore be taken up by the examiner for action in its regular turn.

Petitioner is given a single opportunity to perfect the petition. Any request for reconsideration of this decision must be submitted within one (1) month or thirty (30) days, whichever is longer, from the date of this decision. No extensions of time will be granted under 37 CFR 1.136(a) if the request is to be considered timely. Any request for reconsideration must address the deficiencies indicated above.

Petitioner is reminded that, upon granting of the special status of the application on request for reconsideration, the application will be processed expeditiously. However, due to the dismissal of the instant petition, examination may not be completed within twelve months of the filing date of the application.

Any inquiry regarding this decision should be directed to Robert Weinhardt at (571) 272-6633, or C. Michelle Tarae at (571) 272-6727, both Business Practice Specialists.

C. Michelle Tarae

C. Michelle Tarae
Business Practice Specialist
Technology Center 3600

CMT/RW/11/21/08

UNITED STATES PATENT AND TRADEMARK OFFICE

Commissioner for Patents
United States Patent and Trademark Office
P.O. Box 1450
Alexandria, VA 22313-1450
www.uspto.gov

MAIL

SEP 25 2008

DIRECTOR'S OFFICE
TECHNOLOGY CENTER 2600

IBM CORPORATION (SWP)
C/O SUITER SWANTZ PC LLO
14301 FNB PARKWAY, SUITE 220
OMAHA NE 68154-5299

In re Application of:
GRAIG MCMILLAN
Serial No.: 12/190,248
Filed: August, 12th 2008
Attorney Docket number: **CA920080051US1**
Title: **BIOMETRIC IDENTIFICATION ASSURANCE METHOD AND TOKEN RETRIEVAL**

DECISION ON PETITION TO MAKE SPECIAL FOR NEW APPLICATION UNDER 37 C.F.R. § 1.102 & M.P.E.P. § 708.02

This is a decision on the petition filed on August, 12th 2008 to make the above-identified application special for accelerated examination procedure under 37 C.F.R. § 1.102(d).

The petition to make the application special is **DISMISSED**.

REGULATION AND PRACTICE

A grantable petition to make special under 37 C.F.R. § 1.102(d) and pursuant to the "Change to Practice for Petitions in Patent Applications to Make Special and for Accelerated Examination" published in the Federal Register on June 26, 2006 (71 Fed. Reg. 36323), must satisfy the following conditions:

I. Conditions Regarding the Application:

1. the application must be a non-reissue utility or design application filed under 37 CFR 1.111(a);
2. the application, the petition and the required fees must be filed electronically using the USPTO's electronic filing system (EFS), or EFS-web; if not filed electronically, a statement asserting that EFS and EFS-web were not available during the normal business hours.
3. at the time of filing, the application must be complete under 37 CFR 1.51 and in condition for examination;

4. the application must contain three or fewer independent claims and twenty or fewer total claims and the claims must be directed to a single invention.

II. Conditions Regarding the Petition:

The petition must:

1. be filed with the application;

2. include a statement that applicant agrees not to separately argue the patentability of any independent claim during any appeal in the application;

3. include a statement that applicant agrees to make an election without traverse in a telephone interview.

4. include a statement that applicant agrees to conduct such an interview when requested by the examiner.

5. include a statement, made based on a good faith belief, that a preexamination search in compliance with the following requirements, was conducted, including an identification of the filed of search by United States class and subclass, where applicable, and for database searches, the search logic or chemical structure or sequence used as a query, the name of the file(s) searched and the database service, and the date of the search.

The preexamination search must:

5.1 involve U.S. patents and patent application publications, foreign patent documents, and non-patent literature, unless the applicant can justify with reasonable certainty that no references more pertinent than those already identified are likely to be found in the eliminated sources and includes such a justification with this statement;

5.2. be directed to the claimed invention and encompass all of the features of the claims, giving the claims the broadest reasonable interpretation;

5.3. encompass the disclosed features that may be claimed.

6. must provide in support of the petition an accelerated examination support document. An accelerated examination support document must include:

6.1. an information disclosure statement (IDS) in compliance with 37 CFR 1.98 citing each reference deemed most closely related to the subject matter of each of the claims;

6.2. an identification of all the limitations in the claims that are disclosed by the reference specifying where the limitation is disclosed in the cited reference;

6.3. a detailed explanation of how each of the claims are patentable over the references cited with particularity required by 37 CFR 1.111(b) and (c);

6.4. a concise statement of the utility of the invention as defined in each of the independent claims (unless the application is a design application);

6.5. a showing of where each limitation of the claims finds support under 35 USC 112, first paragraph, in the written description of the specification. If applicable, the showing must also identify: (1) each means- (or step) plus-function claim element that invokes consideration under 35 USC 112, sixth paragraph; and (2) the structure, material, or acts in the specification that corresponds to each means- (or step) plus-function claim element that invokes consideration under 35 USC 112, sixth paragraph; if the application claims the benefit of one or more applications under title 35, United States Code, the showing must also include where each limitation of the claims finds support under 35 USC 112, first paragraph, in each such application in which such supports exists;

6.6. an identification of any cited references that may be disqualified under 35 USC 103(c).

REVIEW OF FACTS

The conditions set forth under section I. above are considered to have been met. However, the petition fails to comply with conditions set forth under section II, items 5.1-5.3.

For these reasons cited above, the petition fails to meet the required conditions to be accorded special status under the accelerated examination procedure.

Regarding the requirement in items 5.1-5.3 above, the preexamination search document provided with the instant petition is deficient as follows: The US field of search and database searches which are to be provided under section 8(A) are not sufficient.

The search logic is restrictive and too narrow. The Applicant uses a search string looking for three elements in the same paragraph. While said search is representative of the inventive concept, a broader search is required. The Applicant is provided with the below suggested search terms:

Relevant search terms include:

1) (biometric*) AND (scan* OR detect* OR read* OR identify* OR authenticat* OR test*) AND (multi OR multiple OR (multi NEAR modal) OR combine OR combined OR combination OR combining OR random*)

2) (biometric*) AND (identify* OR identification OR authenticat*) AND (security) AND (personal)

3) (biometric*) SAME (identify* OR identification OR authenticat*) SAME (security) SAME (personal)

Furthermore, in the last element (multi...) of each search query there should be the term "additional" or "additionally" along with some of the disclosed examples, i.e. voice, iris, name, address, phone etc.

If any request for reconsideration is filed, an updated preexamination search must be conducted as per item 5.1 above, and the Preexamination Search Document must be amended to indicate such; a new Information Disclosure Statement should be filed to cite any newly found prior art, and the Accelerated Examination Support Document must also be amended to include the necessary reference and discussion of any newly found and cited prior art in accordance with all of items 6 through 6.6 above.

For the reason cited above, the petition fails to meet the required conditions to be accorded special status under the accelerated examination procedure.

DECISION

For the above-stated reasons, the petition is **dismissed**. The application will therefore be taken up by the examiner for action in its regular turn.

Petitioner is given a single opportunity to perfect the petition. Any request for reconsideration of this decision must be submitted within 1 (one) month or 30 (thirty) days, whichever is longer, (no extension of time under 37 CFR 1.136(a)) from the date of this decision in order to be considered timely. Any request for reconsideration must address the deficiencies indicated above.

Petitioner is reminded that, upon granting of the special status of the application on request for reconsideration, the application will be processed expeditiously. However, due to the dismissal of the instant petition, examination may not be completed within twelve months of the filing date of the application.

Any inquiry regarding this decision should be directed to Michael Horabik, Quality Assurance Specialist, at (571) 272-3068.

/Michael Horabik/

Michael Horabik
Quality Assurance Specialist
Technology Center 2600

UNITED STATES PATENT AND TRADEMARK OFFICE

Commissioner for Patents
United States Patent and Trademark Office
P.O. Box 1450
Alexandria, VA 22313-1450
www.uspto.gov

MAIL

DEC 17 2008

DIRECTOR'S OFFICE
TECHNOLOGY CENTER 2600

IBM CORPORATION (ACCSP)
c/o Suiter Swantz pc llo
14301 FNB Parkway, Suite 220
Omaha NE 68154

In re Application of: CRAIG MCMILLAN
Serial No.: 12/190,248
Filed: August 12, 2008
Attorney Docket No.: **CA920080051US1**
Title: **BIOMETRIC IDENTIFICATION ASSURANCE METHOD AND TOKEN RETRIEVAL**

DECISION ON PETITION TO MAKE SPECIAL FOR NEW APPLICATION UNDER 37 C.F.R. § 1.102 & M.P.E.P. § 708.02

This is a decision on the petition filed on October 27, 2008 requesting reconsideration to make the above-identified application special for accelerated examination procedure under 37 C.F.R. § 1.102(d).

All of the requirements to correct the deficiencies outlined in the petition decision mailed September 25, 2008 have been met.

The petition to make the application special is **GRANTED**.

The application is eligible for accelerated examination and the petition complies with the conditions for granting the application special status pursuant to the "Change to Practice for Petitions in Patent Applications to Make Special and for Accelerated Examination" published June 26, 2006, in the Federal Register. (71 Fed. Reg. 36323).

The prosecution of the instant application will be conducted expeditiously according to the following guidelines.

1. The application will be docketed to an examiner and taken up for action within two weeks of the date of this decision.

2. Restriction Practice:
   If the examiner determines that the claims are not directed to a single invention, a telephone request to elect one single invention will be made pursuant to MPEP 812.01. As a prerequisite to the grant of this petition, the applicant has agreed to make an oral election, by telephone, without traverse. If the applicant refuses to make an election without traverse, or the examiner cannot reach the applicant after a reasonable effort, the

examiner will treat the first claimed invention (invention defined by claim 1) as having being constructively elected without traverse for examination.

3. Office action:
If it is determined that, after appropriate consultation, there is a potential rejection or any other issue to be addressed, the examiner will telephone the applicant and arrange an interview to discuss and resolve the issue. An Office action, other than a Notice of Allowance and Fee(s) Due (Notice of Allowance), will not be issued unless either: 1) an interview was conducted but did not result in agreed to action that places the application in condition for allowance, or, 2) a determination is made that an interview would be unlikely to result in the application being placed in condition for allowance, and 3) an internal conference has been held to review any rejection of any claim.

4. Time for Reply:
An Office action other than a Notice of Allowance or a final Office action will set a shortened statutory period of one month or thirty days, whichever is longer, for reply with no extension of time available under 37 CFR 1.136(a). Failure to timely file a reply within this non-extendible period for reply will result in the abandonment of the application.

5. Reply by Applicant:
A timely reply to an Office action other than the Notice of Allowance must be submitted electronically via EFS or EFS-web and limited to addressing the rejections, objections and requirement made. Any amendment that attempts to: 1) add claims which would result in more than three pending independent claims or more than twenty pending total claims; 2) present claims not encompassed by the pre-examination search or an updated accelerated examination support document; or 3) present claims that are directed a non-elected invention or an invention other than that previously claimed and examined in the application, will be treated as not fully responsive and will not be entered.

   For any amendment to the claims (including any new claim) that is not encompassed by the accelerated examination support document, applicant must provide an updated accelerated examination support document that encompasses the amended or new claims at the time of filing of the amendment.

   To proceed expeditiously with the examination, it is recommended that a reply with amendments made to any claim or with any new claim being added be accompanied by an updated accelerated examination support document or a statement explaining how the amended or new claim is supported by the original accelerated examination support document.

6. Information Disclosure Statement (IDS):
Any IDS filed during prosecution must be submitted electronically via EFS or EFS-web, accompanied by an updated accelerated examination support document, and be in compliance with 37 CFR 1.97 and 1.98.

7. Post-Allowance Processing:
To expedite processing of the allowed application into a patent, the applicant must: 1) pay the required fees within one month of the date of the Notice of Allowance, and 2) not

file any post allowance papers not required by the Office. In no event may the issue fee be paid and accepted later than three months from the date of the Notice of Allowance.

8. After-Final and Appeal Procedures:
   To expedite prosecution, after receiving the final Office action, applicant must: 1) promptly file a notice of appeal, an appeal brief and appeal fees; and 2) not request a pre-appeal brief conference.

   Any amendment, affidavit or other evidence filed after final Office action must comply with applicable rules and the requirements outlined in numbered paragraphs 5 and 6 above.

   On appeal, the application will proceed according to normal appeal procedures. After appeal, the application will again be treated special.

9. Proceedings Outside the Normal Examination Process:
   If the application becomes involved in a proceeding that is outside the normal examination process (e.g., a secrecy order, national security review, interference proceeding, petitions under 37 CFR 1.181, 182 or 183), the application will be treated special before and after such proceeding.

10. Final Disposition:
    The twelve month goal of this accelerated examination procedure ends with a final disposition. The mailing of a final Office action, a Notice of Allowance, the filing of a Notice of Appeal, or the filing of a Request for Continued Examination (RCE) is the final disposition.

If, during prosecution, a paper is not filed electronically using EFS-web, a reply is filed but is not fully responsive, the application is involved in an appeal, or a proceeding outside normal examination process, the application will still be examined expeditiously, however, the final disposition may occur more than twelve months from the filing of the application.

Any inquiry regarding this decision should be directed to Michael Horabik, Quality Assurance Specialist, at (571) 272-3068.

/Michael Horabik/

Michael Horabik
Quality Assurance Specialist
Technology Center 2600
Communications

UNITED STATES PATENT AND TRADEMARK OFFICE

Commissioner for Patents
United States Patent and Trademark Office
P.O. Box 1450
Alexandria, VA 22313-1450
www.uspto.gov

COPY MAILED

OCT 2 8 2009

OFFICE OF PETITIONS

GRAHAM CURTIN, P.A.
4 Headquarters Plaza
P.O. Box 1991
Morristown NJ 07962-1991

In re Application of	:	
Ran Zou, et al.	:	
Application No. 12/190,263	:	DECISION ON PETITION
Filed: August 12, 2008	:	
Attorney Docket No. **5775-2 (1568A)**	:	

This is a decision on the petition under the unintentional provisions of 37 CFR 1.137(b), filed August 26, 2009, to revive the above-identified application.

The petition is **GRANTED**.

The application became abandoned for failure to reply in a timely manner to the Notice to File Corrected Application Papers (Notice), mailed August 27, 2008. The Notice set a period for reply of two (2) months from the mail date of the Notice. No extensions of time under the provisions of 37 CFR 1.136(a) was obtained. Accordingly, the application became abandoned on October 28, 2008. The Notice of Abandonment was mailed April 28, 2009.

The petition satisfies the requirements of 37 CFR 1.137(b) in that petitioner has supplied (1) the reply in the form of replacement drawings, (2) the petition fee of $810, and (3) a proper statement of unintentional delay.

Telephone inquiries concerning this decision should be directed to Terri Johnson at (571) 272-2991.

This application is being referred to the Office of Patent Application Processing for appropriate action on the reply received

Terri Johnson

Terri Johnson
Petitions Examiner
Office of Petitions

UNITED STATES PATENT AND TRADEMARK OFFICE

UNITED STATES DEPARTMENT OF COMMERCE
United States Patent and Trademark Office
Address: COMMISSIONER FOR PATENTS
P.O. Box 1450
Alexandria, Virginia 22313-1450
www.uspto.gov

AUTOMOTIVE COMPONENTS HOLDINGS LLC
C/O MACMILLAN, SOBANSKI & TODD, LLC
ONE MARITIME PLAZA, FIFTH FLOOR
720 WATER STREET
TOLEDO, OH 43604-1853

Mail Date: 04/21/2010

Applicant	: Raymond E. Kalisz	: DECISION ON REQUEST FOR
Patent Number	: 7631890	: RECALCULATION of PATENT
Issue Date	: 12/15/2009	: TERM ADJUSTMENT IN VIEW
Appliction No	: 12/190,266	: OF WYETH AND NOTICE OF INTENT TO
Filed	: 08/12/2008	: ISSUE CERTIFICATE OF CORRECTION
		:

The Request for Recalculation is **GRANTED** to the extent indicated.

The patent term adjustment has been determined to be **0** days. The USPTO will *sua sponte* issue a certificate of correction reflecting the amount of PTA days determined by the recalculation.

Prior to the issuance of the certificate of correction, the USPTO will afford patentee an opportunity to be heard and request reconsideration. Accordingly, patentee has **one month or thirty (30) days**, whichever is longer, to file a request for reconsideration of this patent term adjustment calculation. See 35 U.S.C. 154(b)(3)(B)(ii) and 37 CFR 1.322(a)(4). No extensions of time will be granted under 37 CFR 1.136.

Patentee should use document code PET.OP if electronically filing a request for reconsideration of this patent term adjustment calculation. The patentee must also include the information required by 37 CFR 1.705(b)(2) and the fee required by 37 CFR 1.18(e). If patentee does not file a timely request for reconsideration of this patent term adjustment calculation including the information required by 37 CFR 1.705(b)(2) and the fee required by 37 CFR 1.18(e), the USPTO will issue a certificate of correction reflecting the PTA determination noted above.

Patentee should be aware that in order to preserve the right to review in the United States District Court for the District of Columbia of the USPTO patent term adjustment determination, patentee must ensure that he or she also take the steps required under 35 U.S.C. 154(b)(4)(A) in a timely manner. Nothing in the request for recalculation should be construed as providing an alternative time frame for commencing a civil action under 35 U.S.C. 154(b)(4)(A).

Any questions concerning this decision should be directed to the Office of Patent Legal Administration at 571-272-7702.

UNITED STATES PATENT AND TRADEMARK OFFICE

Commissioner for Patents
United States Patent and Trademark Office
P.O. Box 1450
Alexandria, VA 22313-1450
www.uspto.gov

MAILED

FEB 02 2009

TECHNOLOGY CENTER 2100

DILLON & YUDELL LLP
8911 NORTH CAPITAL OF TEXAS HWY
SUITE 2110
AUSTIN TX 78759

In re Application of: BLUM, Daniel et. al.
Serial No.: 12/190,297
Filed: August 12, 2008
Docket: DE920080011US1
Title: METHOD OF AND SYSTEM FOR HANDLING COOKIES

DECISION ON PETITION TO MAKE SPECIAL FOR NEW APPLICATION UNDER 37 C.F.R. § 1.102 & M.P.E.P. § 708.02

This is a decision on the petition filed on August 12, 2008 to make the above-identified application special for accelerated examination procedure under 37 C.F.R. § 1.102(d).

Two Supplemental IDS filed January 05, 2009 meet requirement of MPEP 708.02(a) (I) (1) and condition II. 6.1, which state that an accelerated examination support document must include an information disclosure statement (IDS) in compliance with 37 CFR 1.98 citing each reference deemed most closely related to the subject matter of each of the claims. Information disclosure statements (IDS) are in compliance with 37 CFR 1.98 citing each reference deemed ***most closely related*** to the subject matter of each of the claims and references deemed ***not closely related*** to the subject matter of the claims, separately. These separate IDS(es) have been properly identified as one IDS *in support of the petition* to make special under accelerated examination and another IDS *not in support of the petition* to make special under accelerated examination.

The petition to make the application special is **GRANTED**.

The application is eligible for accelerated examination and the petition complies with the conditions for granting the application special status pursuant to the "Change to Practice for Petitions in Patent Applications to Make Special and for Accelerated Examination" published June 26, 2006, in the Federal Register. (71 Fed. Reg. 36323).

The prosecution of the instant application will be conducted expeditiously according to the following guidelines.

1. The application will be docketed to an examiner and taken up for action within two weeks of the date of this decision.

2. Restriction Practice:
If the examiner determines that the claims are not directed to a single invention, a telephone request to elect one single invention will be made pursuant to MPEP 812.01. As a prerequisite to the grant of this petition, the applicant has agreed to make an oral election, by telephone, without traverse. If the applicant refuses to make an election without traverse, or the examiner cannot reach the applicant after a reasonable effort, the examiner will treat the first claimed invention (invention defined by claim 1) as having being constructively elected without traverse for examination.

3. Office action:
If it is determined that, after appropriate consultation, there is a potential rejection or any other issue to be addressed, the examiner will telephone the applicant and arrange an interview to discuss and resolve the issue. An Office action, other than a Notice of Allowance and Fee(s) Due (Notice of Allowance), will not be issued unless either: 1) an interview was conducted but did not result in agreed to action that places the application in condition for allowance, or, 2) a determination is made that an interview would be unlikely to result in the application being placed in condition for allowance, and 3) an internal conference has been held to review any rejection of any claim.

4. Time for Reply:
An Office action other than a Notice of Allowance or a final Office action will set a shortened statutory period of one month or thirty days, whichever is longer, for reply with no extension of time available under 37 CFR 1.136(a). Failure to timely file a reply within this non-extendible period for reply will result in the abandonment of the application.

5. Reply by Applicant:
A timely reply to an Office action other than the Notice of Allowance must be submitted electronically via EFS or EFS-web and limited to addressing the rejections, objections and requirement made. Any amendment that attempts to: 1) add claims which would result in more than three pending independent claims or more than twenty pending total claims; 2) present claims not encompassed by the pre-examination search or an updated accelerated examination support document; or 3) present claims that are directed a non-elected invention or an invention other than that previously claimed and examined in the application, will be treated as not fully responsive and will not be entered.

For any amendment to the claims (including any new claim) that is not encompassed by the accelerated examination support document, applicant must provide an updated accelerated examination support document that encompasses the amended or new claims at the time of filing of the amendment.

To proceed expeditiously with the examination, it is recommended that a reply with amendments made to any claim or with any new claim being added be accompanied by an updated accelerated examination support document or a

statement explaining how the amended or new claim is supported by the original accelerated examination support document.

6. Information Disclosure Statement (IDS):
   Any IDS filed during prosecution must be submitted electronically via EFS or EFS-web, accompanied by an updated accelerated examination support document, and be in compliance with 37 CFR 1.97 and 1.98.

7. Post-Allowance Processing:
   To expedite processing of the allowed application into a patent, the applicant must: 1) pay the required fees within one month of the date of the Notice of Allowance, and 2) not file any post allowance papers not required by the Office. In no event may the issue fee be paid and accepted later than three months from the date of the Notice of Allowance.

8. After-Final and Appeal Procedures:
   To expedite prosecution, after receiving the final Office action, applicant must: 1) promptly file a notice of appeal, an appeal brief and appeal fees; and 2) not request a pre-appeal brief conference.

   Any amendment, affidavit or other evidence filed after final Office action must comply with applicable rules and the requirements outlined in numbered paragraphs 5 and 6 above.

   On appeal, the application will proceed according to normal appeal procedures. After appeal, the application will again be treated special.

9. Proceedings Outside the Normal Examination Process:
   If the application becomes involved in a proceeding that is outside the normal examination process (e.g., a secrecy order, national security review, interference proceeding, petitions under 37 CFR 1.181, 182 or 183), the application will be treated special before and after such proceeding.

10. Final Disposition:
    The twelve-month goal of this accelerated examination procedure ends with a final disposition. The mailing of a final Office action, a Notice of Allowance, the filing of a Notice of Appeal, or the filing of a Request for Continued Examination (RCE) is the final disposition.

If, during prosecution, a paper is not filed electronically using EFS-web, a reply is filed but is not fully responsive, the application is involved in an appeal, or a proceeding outside normal examination process, the application will still be examined expeditiously, however, the final disposition may occur more than twelve months from the filing of the application. In addition, Applicant is reminded that due to the dismissal of the previous

petition submission, examination may not be completed within twelve months of the filing date of the application.

Any inquiry regarding this decision should be directed the undersigned whose telephone number is (571) 272-4147.

/bp/

Kim Huynh, Quality Assurance Specialist
Technology Center 2400,
Network, Multiplexing, Cable and Security

UNITED STATES PATENT AND TRADEMARK OFFICE

UNITED STATES DEPARTMENT OF COMMERCE
United States Patent and Trademark Office
Address: COMMISSIONER FOR PATENTS
P.O. Box 1450
Alexandria, Virginia 22313-1450
www.uspto.gov

APPLICATION NO.	FILING DATE	FIRST NAMED INVENTOR	ATTORNEY DOCKET NO.	CONFIRMATION NO.
12/190,297	08/12/2008	Daniel Blum	DE920080011US1	8535

42640 7590 02/02/2009
DILLON & YUDELL LLP
8911 NORTH CAPITAL OF TEXAS HWY
SUITE 2110
AUSTIN, TX 78759

EXAMINER
CALDWELL, ANDREW T

ART UNIT	PAPER NUMBER
2442	

MAIL DATE	DELIVERY MODE
02/02/2009	PAPER

Please find below and/or attached an Office communication concerning this application or proceeding.

The time period for reply, if any, is set in the attached communication.

UNITED STATES PATENT AND TRADEMARK OFFICE

Commissioner for Patents
United States Patent and Trademark Office
P.O. Box 1450
Alexandria, VA 22313-1450
www.uspto.gov

FOX ROTHSCHILD LLP
2000 MARKET STREET
10TH FLOOR
PHILADELPHIA PA 19103

COPY MAILED

JUN 09 2009

OFFICE OF PETITIONS

In re Application of	:	
Kish et al.	:	
Application No. 12/190,372	:	DECISION ON PETITION
Filed: August 12, 2008	:	
Attorney Docket No. P19966-H USA	:	

This is a decision on the petition under the unintentional provisions of 37 CFR 1.137(b), filed April 22, 2009, to revive the above-identified application.

The petition is **GRANTED**.

The application became abandoned for failure to reply in a timely manner to the Notice to File Missing Parts of Nonprovisional Application (Notice), mailed August 26, 2008. The Notice set a period for reply of two (2) months from the mail date of the Notice. No extensions of time under the provisions of 37 CFR 1.136(a) were obtained. Accordingly, the application became abandoned on October 27, 2008.

The petition satisfies the requirements of 37 CFR 1.137(b) in that petitioner has supplied (1) the reply in the form of Substitute Specification, the Statutory basic filing fee of $330.00, the Search fee of $540.00 and $130.00 surcharge, and the Examination fee of $220.00, (2) the petition fee of $1,620.00, and (3) a proper statement of unintentional delay.

It is not apparent whether the person signing the instant petition was ever given a power of attorney or authorization of agent to prosecute this patent. In accordance with 37 CFR 1.34(a), the signature appearing on the petition shall constitute a representation to the United States Patent and Trademark Office that he/she is authorized to represent the particular party in whose behalf he/she acts.

Telephone inquiries concerning this decision should be directed to Joan Olszewski at (571) 272-7751.

This application is being referred to the Office of Patent Application Processing for further processing in accordance with this decision on petition.

/Liana Walsh/
Liana Walsh
Petitioner Examiner
Office of Petitions

Best Available Copy

UNITED STATES PATENT AND TRADEMARK OFFICE

Commissioner for Patents
United States Patent and Trademark Office
P.O. Box 1450
Alexandria, VA 22313-1450
www.uspto.gov

FOX ROTHSCHILD LLP
997 Lenox Drive, Bldg. #3
Lawrenceville NJ 08648

MAILED

MAY 10 2010

OFFICE OF PETITIONS

In re Application of
Fred A. Kish et al.
Application No. 12/190,372
Filed: August 12, 2008
Attorney Docket No. **P19966-H USA**

DECISION ON PETITION

This is a decision on the petition under the unintentional provisions of 37 CFR 1.137(b), filed February 15, 2010, to revive the above-identified application.

The petition is **GRANTED**.

The application became abandoned for failure to reply in a timely manner to the non-final Office action mailed, July 27, 2009, which set a shortened statutory period for reply of three (3) months. No extensions of time under the provisions of 37 CFR 1.136(a) were obtained. Accordingly, the application became abandoned on October 28, 2009.

The petition satisfies the requirements of 37 CFR 1.137(b) in that petitioner has supplied (1) the reply in the form of an amendment, (2) the petition fee of $1,620, and (3) a proper statement of unintentional delay.

It is not apparent whether the person signing the statement of unintentional delay was in a position to have firsthand or direct knowledge of the facts and circumstances of the delay at issue. Nevertheless, such statement is being treated as having been made as the result of a reasonable inquiry into the facts and circumstances of such delay. See 37 CFR 10.18(b) and Changes to Patent Practice and Procedure; Final Rule Notice, 62 Fed. Reg. 53131, 53178 (October 10, 1997), 1203 Off. Gaz. Pat. Office 63, 103 (October 21, 1997). In the event that such an inquiry has not been made, petitioner must make such an inquiry. If such inquiry results in the discovery that it is not correct that the entire delay in filing the required reply from the due date for the reply until the filing of a grantable petition pursuant to 37 CFR 1.137(b) was unintentional, petitioner must notify the Office.

There is no indication that the person signing the petition was ever given a power of attorney to prosecute the application. If the person signing the petition desires to receive future correspondence regarding this application, the appropriate power of attorney document must be submitted. While a courtesy copy of this decision is being mailed to the person signing the petition, all future correspondence will be directed to the address currently of record until appropriate instructions are received.

Telephone inquiries concerning this decision should be directed to JoAnne Burke at (571) 272-4584.

This application is being referred to Technology Center AU 1796 for appropriate action by the Examiner in the normal course of business on the reply received.

/JoAnne Burke/
JoAnne Burke
Petitions Examiner
Office of Petitions

cc: Joseph F. Posillico
Fox Rothschild LLP
2000 market Street
Philadelphia, PA 19103

UNITED STATES PATENT AND TRADEMARK OFFICE

UNITED STATES DEPARTMENT OF COMMERCE
United States Patent and Trademark Office
Address: COMMISSIONER FOR PATENTS
P.O. Box 1450
Alexandria, Virginia 22313-1450
www.uspto.gov

APPLICATION NO.	FILING DATE	FIRST NAMED INVENTOR	ATTORNEY DOCKET NO.	CONFIRMATION NO.
12/190,395	08/12/2008	Corey Elizabeth Yearous	ROC920080361US1	8732

77062 7590 09/29/2008
The Law Firm of Andrea Hence Evans, LLC
14625 Baltimore Ave., #853
Laurel, MD 20707

EXAMINER

ART UNIT	PAPER NUMBER
2812	

MAIL DATE	DELIVERY MODE
09/29/2008	PAPER

Please find below and/or attached an Office communication concerning this application or proceeding.

The time period for reply, if any, is set in the attached communication.

UNITED STATES PATENT AND TRADEMARK OFFICE

Commissioner for Patents
United States Patent and Trademark Office
P.O. Box 1450
Alexandria, VA 22313-1450
www.uspto.gov

The Law Firm of Andrea Hence Evans, LLC
14625 Baltimore Ave., #853
Laurel, MD 20707

In re Application of:	:	
Corey Elizabeth Yearous et al.	:	
Serial No.: 12/190,395	:	DECISION ON PETITION TO
Filed: August 12, 2008	:	MAKE SPECIAL FOR NEW
Attorney Docket No.: ROC920080361US1	:	APPLICATION UNDER 37
Title: ALIGNING STACKED CHIPS USING	:	C.F.R. § 1.102 & M.P.E.P. § 708.2
RESISTANCE ASSISTANCE	:	

This is a decision on the petition filed on August 12, 2008 to make the above-identified application special for accelerated examination procedure under 37 C.F.R. §1.102(d).

The petition to make the application special is GRANTED.

The application is eligible for accelerated examination and the petition complies with the conditions for granting the application special status pursuant to the "Change to Practice for Petitions in Patent Applications to Make Special and for Accelerated Examination" published June 26, 2006, in the Federal Register. (71 Fed. Reg. 36323).

The prosecution of the instant application will be conducted expeditiously according to the following guidelines.

1. The application will be docketed to an examiner and taken up for action within two weeks of the date of this decision.

2. Restriction Practice:
   If the examiner determines that the claims are not directed to a single invention, a telephone request to elect one single invention will be made pursuant to MPEP 812.01. As a prerequisite to the grant of this petition, the applicant has agreed to make an oral election, by telephone, without traverse. If the applicant refuses to make an election without traverse, or the examiner cannot reach the applicant after a reasonable effort, the examiner will treat the first claimed invention (invention defined by claim 1) as having being constructively elected without traverse for examination.

3. Office action:
   If it is determined that, after appropriate consultation, there is a potential rejection or any other issue to be addressed, the examiner will telephone the applicant and arrange an interview to discuss and resolve the issue. An Office action, other than a Notice of Allowance and Fee(s) Due (Notice of Allowance), will not be issued unless either: 1) an interview was conducted but did not result in agreed to action that places the application in condition for allowance, or, 2) a determination is made that an interview would be unlikely to result in the application being placed in condition for allowance, and 3) an internal conference has been held to review any rejection of any claim.

4. Time for Reply:
   An Office action other than a Notice of Allowance or a final Office action will set a shortened statutory period of one month or thirty days, whichever is longer, for reply with no extension of time available under 37 C.F.R. §1.136(a). Failure to timely file a reply within this non-extendible period for reply will result in the abandonment of the application.

5. Reply by Applicant:
   A timely reply to an Office action other than the Notice of Allowance must be submitted electronically via EFS or EFS-web and limited to addressing the rejections, objections and requirement made. Any amendment that attempts to: 1) add claims which would result in more than three pending independent claims or more than twenty pending total claims; 2) present claims not encompassed by the pre-examination search or an updated accelerated examination support document; or 3) present claims that are directed a non-elected invention or an invention other than that previously claimed and examined in the application, will be treated as not fully responsive and will not be entered.

   For any amendment to the claims (including any new claim) that is not encompassed by the accelerated examination support document, applicant must provide an updated accelerated examination support document that encompasses the amended or new claims at the time of filing of the amendment.

   To proceed expeditiously with the examination, it is recommended that a reply with amendments made to any claim or with any new claim being added be accompanied by an updated accelerated examination support document or a statement explaining how the amended or new claim is supported by the original accelerated examination support document.

6. Information Disclosure Statement (IDS):
   Any IDS filed during prosecution must be submitted electronically via EFS or EFS-web, accompanied by an updated accelerated examination support document, and be in compliance with 37 C.F.R. §1.97 and §1.98. mpliance with 37 C.F.R. §1.97 and §1.98.

7. Post-Allowance Processing:
   To expedite processing of the allowed application into a patent, the applicant must: 1) pay the required fees within one month of the date of the Notice of Allowance, and 2) not file any post allowance papers not required by the Office. In no event may the issue fee be paid and accepted later than three months from the date of the Notice of Allowance.

8. After-Final and Appeal Procedures:
   To expedite prosecution, after receiving the final Office action, applicant must: 1) promptly file a notice of appeal, an appeal brief and appeal fees; and 2) not request a pre-appeal brief conference.

   Any amendment, affidavit or other evidence filed after final Office action must comply with applicable rules and the requirements outlined in numbered paragraphs 5 and 6 above.

   On appeal, the application will proceed according to normal appeal procedures. After appeal, the application will again be treated special.

9. Proceedings Outside the Normal Examination Process:
   If the application becomes involved in a proceeding that is outside the normal examination process (e.g., a secrecy order, national security review, interference proceeding, petitions under 37 C.F.R. §1.181, §1.182 or §1.183), the application will be treated special before and after such proceeding.

10. Final Disposition:
    The twelve-month goal of this accelerated examination procedure ends with a final disposition. The mailing of a final Office action, a Notice of Allowance, the filing of a Notice of Appeal, or the filing of a Request for Continued Examination (RCE) is the final disposition.

If, during prosecution, a paper is not filed electronically using EFS-web, a reply is filed but is not fully responsive, the application is involved in an appeal, or a proceeding outside normal examination process, the application will still be examined expeditiously, however, the final disposition may occur more than twelve months from the filing of the application.

Any inquiry regarding this decision should be directed to the undersigned at (571) 272-1638.

Edward Westin

Edward Westin, Quality Assurance Specialist
Technology Center 2800
Semiconductors, Electrical and Optical
Systems and Components

UNITED STATES PATENT AND TRADEMARK OFFICE

UNITED STATES DEPARTMENT OF COMMERCE
United States Patent and Trademark Office
Address: COMMISSIONER FOR PATENTS
P.O. Box 1450
Alexandria, Virginia 22313-1450
www.uspto.gov

BIRCH STEWART KOLASCH & BIRCH
PO BOX 747
FALLS CHURCH, VA 22040-0747

Mail Date: 04/20/2010

Applicant	: Yushi INOUE	: DECISION ON REQUEST FOR
Patent Number	: 7615459	: RECALCULATION of PATENT
Issue Date	: 11/10/2009	: TERM ADJUSTMENT IN VIEW
Appliction No	: 12/190,398	: OF WYETH AND NOTICE OF INTENT TO
Filed	: 08/12/2008	: ISSUE CERTIFICATE OF CORRECTION
		:

The Request for Recalculation is **GRANTED** to the extent indicated.

The patent term adjustment has been determined to be **0** days. The USPTO will *sua sponte* issue a certificate of correction reflecting the amount of PTA days determined by the recalculation.

Prior to the issuance of the certificate of correction, the USPTO will afford patentee an opportunity to be heard and request reconsideration. Accordingly, patentee has **one month or thirty (30) days**, whichever is longer, to file a request for reconsideration of this patent term adjustment calculation. See 35 U.S.C. 154(b)(3)(B)(ii) and 37 CFR 1.322(a)(4). No extensions of time will be granted under 37 CFR 1.136.

Patentee should use document code PET.OP if electronically filing a request for reconsideration of this patent term adjustment calculation. The patentee must also include the information required by 37 CFR 1.705(b)(2) and the fee required by 37 CFR 1.18(e). If patentee does not file a timely request for reconsideration of this patent term adjustment calculation including the information required by 37 CFR 1.705(b)(2) and the fee required by 37 CFR 1.18(e), the USPTO will issue a certificate of correction reflecting the PTA determination noted above.

Patentee should be aware that in order to preserve the right to review in the United States District Court for the District of Columbia of the USPTO patent term adjustment determination, patentee must ensure that he or she also take the steps required under 35 U.S.C. 154(b)(4)(A) in a timely manner. Nothing in the request for recalculation should be construed as providing an alternative time frame for commencing a civil action under 35 U.S.C. 154(b)(4)(A).

Any questions concerning this decision should be directed to the Office of Patent Legal Administration at 571-272-7702.

UNITED STATES PATENT AND TRADEMARK OFFICE

UNITED STATES DEPARTMENT OF COMMERCE
United States Patent and Trademark Office
Address: COMMISSIONER FOR PATENTS
P.O. Box 1450
Alexandria, Virginia 22313-1450
www.uspto.gov

APPLICATION NO.	FILING DATE	FIRST NAMED INVENTOR	ATTORNEY DOCKET NO.	CONFIRMATION NO.
12/190,485	08/12/2008	Steve Gutz	CA920080069US1	8903

79452 7590 05/27/2009
IBM - SPP
SHIMOKAJI & ASSOCIATES, P.C.
8911 Research Drive
Irvine, CA 92618

EXAMINER

ART UNIT	PAPER NUMBER
2192	

NOTIFICATION DATE	DELIVERY MODE
05/27/2009	ELECTRONIC

Please find below and/or attached an Office communication concerning this application or proceeding.

The time period for reply, if any, is set in the attached communication.

Notice of the Office communication was sent electronically on above-indicated "Notification Date" to the following e-mail address(es):

patents@shimokaji.com

UNITED STATES PATENT AND TRADEMARK OFFICE

Commissioner for Patents
United States Patent and Trademark Office
P.O. Box 1450
Alexandria, VA 22313-1450
www.uspto.gov

IBM - SPP
SHIMOKAJI & ASSOCIATES, P.C.
8911 Research Drive
Irvine CA 92618

In re Application of: Steve Gutz, et al. Serial No.:12/190,485 Filed: August 12, 2008 Docket: CA920080069US1 Title: BUILD OPTIMIZATION WITH APPLIED STATIC ANALYSIS	DECISION ON PETITION TO MAKE SPECIAL FOR NEW APPLICATION UNDER 37 C.F.R. § 1.102 & M.P.E.P. § 708.02

This is a decision on the petition filed on August 12, 2008 to make the above-identified application special for accelerated examination procedure under 37 C.F.R. § 1.102(d).

The petition to make the application special is **DENIED**.

REGULATION AND PRACTICE

To be eligible for accelerated examination under 37 C.F.R. § 1.102(d) and pursuant to the "Change to Practice for Petitions in Patent Applications to Make Special and for Accelerated Examination" published in the Federal Register on June 26, 2006 (71 Fed. Reg. 36323), the following conditions must be satisfied:

II. Conditions Regarding the Petition:

The petition must:

....

....

5. include a statement, made based on a good faith belief, that a preexamination search in compliance with the following requirements, was conducted, including an identification of the field of search by United States class and subclass, where applicable, and for database searches, the search logic or chemical structure or sequence used as a query, the name of the file(s) searched and the database service, and the date of the search.

The preexamination search must:

5.1 involve U.S. patents and patent application publications, foreign patent documents, and non-patent literature, unless the applicant can justify with reasonable certainty that no references more pertinent than those already identified are likely to be found in the eliminated sources and includes such a justification with this statement;

5.2. be directed to the claimed invention and encompass all of the features of the claims, giving the claims the broadest reasonable interpretation;

5.3. encompass the disclosed features that may be claimed.

6. must provide in support of the petition an accelerated examination support document. An accelerated examination support document must include:

6.1. an information disclosure statement (IDS) in compliance with 37 CFR 1.98 citing each reference deemed most closely related to the subject matter of each of the claims;

6.2. an identification of all the limitations in the claims that are disclosed by the reference specifying where the limitation is disclosed in the cited reference;

6.3. a detailed explanation of how each of the claims are patentable over the references cited with particularity required by 37 CFR 1.111(b) and (c);

6.4. a concise statement of the utility of the invention as defined in each of the independent claims (unless the application is a design application);

6.5. a showing of where each limitation of the claims finds support under 35 USC 112, first paragraph, in the written description of the specification. If applicable, the showing must also identify: (1) each means- (or step) plus-function claim element that invokes consideration under 35 UDC 112, sixth paragraph; and (2) the structure, material, or acts in the specification that corresponds to each means- (or step) plus-function claim element that invokes consideration under 35 UDC 112, sixth paragraph; if the application claims the benefit of one or more applications under title 35, United States Code, the showing must also include where each limitation of the claims finds support under 35 USC 112, first paragraph, in each such application in which such supports exists;

6.6. an identification of any cited references that may be disqualified under 35 USC 103(c).

While the petition as filed includes the following statement : "With this petition, applicant is providing: a preexamination search statement, in compliance with the requirements set forth in item 8 of the instruction sheet, and an "accelerated examination support document"", a review of the Application file record indicates that the statement is not accompanied by items 5.1-5.3 above, nor is there an accelerated examination support document including items 6.1-6.6 above. Therefore the petition filed with the application does not comply with the requirements 5 and 6 above.

For the above-stated reasons, the petition is denied. The application will therefore be taken up by the examiner for action in its regular turn.

Any inquiry regarding this decision should be directed to Kakali Chaki, at (571) 272-3719.

/Kakali Chaki/

Kakali Chaki, Quality Assurance Specialist
Technology Center 2100

UNITED STATES PATENT AND TRADEMARK OFFICE

UNITED STATES DEPARTMENT OF COMMERCE
United States Patent and Trademark Office
Address: COMMISSIONER FOR PATENTS
P.O. Box 1450
Alexandria, Virginia 22313-1450
www.uspto.gov

MCANDREWS HELD & MALLOY, LTD
500 WEST MADISON STREET
SUITE 3400
CHICAGO, IL 60661

Mail Date: 04/21/2010

Applicant	: Pieter van Rooyen	: DECISION ON REQUEST FOR
Patent Number	: 7605755	: RECALCULATION of PATENT
Issue Date	: 10/20/2009	: TERM ADJUSTMENT IN VIEW
Appliction No	: 12/190,553	: OF WYETH AND NOTICE OF INTENT TO
Filed	: 08/12/2008	: ISSUE CERTIFICATE OF CORRECTION
		:

The Request for Recalculation is **GRANTED** to the extent indicated.

The patent term adjustment has been determined to be **0** days. The USPTO will *sua sponte* issue a certificate of correction reflecting the amount of PTA days determined by the recalculation.

Prior to the issuance of the certificate of correction, the USPTO will afford patentee an opportunity to be heard and request reconsideration. Accordingly, patentee has **one month or thirty (30) days**, whichever is longer, to file a request for reconsideration of this patent term adjustment calculation. See 35 U.S.C. 154(b)(3)(B)(ii) and 37 CFR 1.322(a)(4). No extensions of time will be granted under 37 CFR 1.136.

Patentee should use document code PET.OP if electronically filing a request for reconsideration of this patent term adjustment calculation. The patentee must also include the information required by 37 CFR 1.705(b)(2) and the fee required by 37 CFR 1.18(e). If patentee does not file a timely request for reconsideration of this patent term adjustment calculation including the information required by 37 CFR 1.705(b)(2) and the fee required by 37 CFR 1.18(e), the USPTO will issue a certificate of correction reflecting the PTA determination noted above.

Patentee should be aware that in order to preserve the right to review in the United States District Court for the District of Columbia of the USPTO patent term adjustment determination, patentee must ensure that he or she also take the steps required under 35 U.S.C. 154(b)(4)(A) in a timely manner. Nothing in the request for recalculation should be construed as providing an alternative time frame for commencing a civil action under 35 U.S.C. 154(b)(4)(A).

Any questions concerning this decision should be directed to the Office of Patent Legal Administration at 571-272-7702.

UNITED STATES PATENT AND TRADEMARK OFFICE

UNITED STATES DEPARTMENT OF COMMERCE
United States Patent and Trademark Office
Address: COMMISSIONER FOR PATENTS
P.O. Box 1450
Alexandria, Virginia 22313-1450
www.uspto.gov

APPLICATION NO.	FILING DATE	FIRST NAMED INVENTOR	ATTORNEY DOCKET NO.	CONFIRMATION NO.
12/190,665	08/13/2008	COLIN L. BIRD	GB920080037US1	9233

53792 7590 03/04/2009
DILLON & YUDELL LLP
8911 N. CAPITAL OF TEXAS HWY.
SUITE 2110
AUSTIN, TX 78759

EXAMINER
DAM, TUAN QUANG

ART UNIT	PAPER NUMBER
2192	

MAIL DATE	DELIVERY MODE
03/04/2009	PAPER

Please find below and/or attached an Office communication concerning this application or proceeding.

The time period for reply, if any, is set in the attached communication.

UNITED STATES PATENT AND TRADEMARK OFFICE

Commissioner for Patents
United States Patent and Trademark Office
P.O. Box 1450
Alexandria, VA 22313-1450
www.uspto.gov

March 2, 2009

EUSTACE P. ISIDORE
DILLON & YUDELL, LLP
8911 N CAPITAL OF TEXAS HWY
SUITE 2110
AUSTIN TX 78759

In re Application of: Colin L. Bird et al.
Serial No: 12/190,665
Filed: August 13, 2008
Docket: GB920080037US1
Title: Template Model for Metadata Capture

DECISION ON PETITION TO MAKE SPECIAL FOR NEW APPLICATION UNDER 37 C.F.R. § 1.102 & M.P.E.P. § 708.02

This is a decision on the petition filed on August 13, 2008 to make the above-identified application special for accelerated examination procedure under 37 C.F.R. § 1.102(d).

The petition to make the application special is **DENIED**.

REGULATION AND PRACTICE

MPEP 708.02(a) sets forth the requirements that a petition to make special 37 C.F.R. § 1.102(d) and pursuant to the "Change to Practice for Petitions in Patent Applications to Make Special and for Accelerated Examination" published in the Federal Register on June 26, 2006 (71 Fed. Reg. 36323), must satisfy in order to be grantable:

> 708.02(a) [R-5] Accelerated Examination
>
> All petitions to make special, except those based on applicants health or age or the Patent Prosecution Highway (PPH) pilot program, filed on or after August 25, 2006 must meet the requirements set forth in subsection I below. See MPEP § 708.02 subsection III or IV (where appropriate) for the requirements for filing a petition to make special based on applicants health or age.
>
> Applications filed prior to August 25, 2006 are not eligible for the accelerated examination program set forth below. A petition to make special filed on or after August 25, 2006 will only be granted if it is based upon applicants health or age or is under the PPH pilot program, or if it complies with the requirements set forth below.
>
> I. REQUIREMENTS FOR PETITIONS TO MAKE SPECIAL UNDER ACCELERATED EXAMINATION
>
> A new application may be granted accelerated examination status under the following conditions:
>
> (A) The application must be filed with a petition to make special under the accelerated examination program accompanied by either the fee set forth in 37 CFR 1.17(h) or a statement that the claimed subject matter is

directed to environmental quality, the development or conservation of energy resources, or countering terrorism. See 37 CFR 1.102(c)(2). Applicant should use form PTO/SB/28 for filing the petition.

(B) The application must be a non-reissue utility or design application filed under 35 U.S.C. 111(a).

(C) The application, petition, and required fees must be filed electronically using the USPTOs electronic filing system (EFS), or EFS-Web. If the USPTOs EFS and EFS-Web are not available to the public during the normal business hours for these systems at the time of filing the application, applicant may file the application, other papers and fees by mail accompanied by a statement that EFS and EFS-Web were not available during the normal business hours, but the final disposition of the application may occur later than twelve months from the filing of the application. See subsection VIII.F. below for more information.

(D) At the time of filing, the application must be complete under 37 CFR 1.51 and in condition for examination. For example, the application must be filed together with the basic filing fee, search fee, examination fee, and application size fee (if applicable), and an executed oath or declaration under 37 CFR 1.63. See subsection VIII.C. below for more information.

(E) The application must contain three or fewer independent claims and twenty or fewer total claims. The application must also not contain any multiple dependent claims. By filing a petition to make special under the accelerated examination program the applicant is agreeing not to separately argue the patentability of any dependent claim during any appeal in the application. Specifically, the applicant is agreeing that the dependent claims will be grouped together with and not argued separately from the independent claim from which they depend in any appeal brief filed in the application (37 CFR 41.37(c)(1)(vii)). The petition must include a statement that applicant will agree not to separately argue the patentability of any dependent claim during any appeal in the application. See form PTO/SB/28.

(F) The claims must be directed to a single invention. If the USPTO determines that all the claims presented are not directed to a single invention, applicant must make an election without traverse in a telephonic interview. The petition must include a statement that applicant will agree to make an election without traverse in a telephonic interview. See form PTO/SB/28.

(G) The applicant must be willing to have an interview (including an interview before a first Office action) to discuss the prior art and any potential rejections or objections with the intention of clarifying and possibly resolving all issues with respect to patentability at that time. The petition must include a statement that applicant will agree to have such an interview when requested by the examiner. See form PTO/SB/28.

(H) At the time of filing, applicant must provide a statement that a preexamination search was conducted, including an identification of the field of search by United States class and subclass and the date of the search, where applicable, and for database searches, the search logic or chemical structure or sequence used as a query, the name of the file or files searched and the database service, and the date of the search.

(1) This preexamination search must involve U.S. patents and patent application publications, foreign patent documents, and non-patent literature, unless the applicant can justify with reasonable certainty that no references more pertinent than those already identified are likely to be found in the eliminated source and includes such a justification with this statement.

(2) This preexamination search must be directed to the claimed invention and encompass all of the features of the claims, giving the claims the broadest reasonable interpretation.

(3) The preexamination search must also encompass the disclosed features that may be claimed. An amendment to the claims (including any new claim) that is not encompassed by the preexamination search or an updated accelerated examination support document (see item I) will be treated as not fully responsive and will not be entered. See subsection IV below for more information.

(4) A search report from a foreign patent office will not satisfy this preexamination search requirement unless the search report satisfies the requirements for a preexamination search.

(5) Any statement in support of a petition to make special must be based on a good faith belief that the preexamination search was conducted in compliance with these requirements. See 37 CFR 1.56 and 10.18.

(I) At the time of filing, applicant must provide in support of the petition an accelerated examination support document.

(1) An accelerated examination support document must include an information disclosure statement (IDS) in compliance with 37 CFR 1.98 citing each reference deemed most closely related to the subject matter of each of the claims.

(2) For each reference cited, the accelerated examination support document must include an identification of all the limitations in the claims that are disclosed by the reference specifying where the limitation is disclosed in the cited reference.

(3) The accelerated examination support document must include a detailed explanation of how each of the claims are patentable over the references cited with the particularity required by 37 CFR 1.111(b) and (c).

(4) The accelerated examination support document must include a concise statement of the utility of the invention as defined in each of the independent claims (unless the application is a design application).

(5) The accelerated examination support document must include a showing of where each limitation of the claims finds support under the first paragraph of 35 U.S.C. 112 in the written description of the specification. If applicable, the showing must also identify:

(i) each means- (or step-) plus-function claim element that invokes consideration under 35 U.S.C. 112, paragraph 6; and

(ii) the structure, material, or acts in the specification that correspond to each means- (or step-) plus-function claim element that invokes consideration under 35 U.S.C. 112, paragraph 6. If the application claims the benefit of one or more applications under title 35, United States Code, the showing must also include where each limitation of the claims finds support under the first paragraph of 35 U.S.C. 112 in each such application in which such support exists.

(6) The accelerated examination support document must identify any cited references that may be disqualified as prior art under 35 U.S.C. 103(c).

REVIEW OF FACTS

The application as filed fails to comply with the conditions of MPEP 708.02(a)(I)(D) above because the application as filed is incomplete. The declaration filed with the application is defective due to containing undated alterations to the text of the declaration thereby failing to comply with 37 CFR 1.52 (c) (1).

37 CFR 1.52 (c) (1) requires:

Any interlineation, erasure, cancellation or other alteration of the application papers filed must be made before the signing of any accompanying oath or declaration pursuant to § 1.63 referring to those application papers and should be dated and initialed or signed by the applicant on the same sheet of paper. Application papers containing alterations made after the signing of an oath or declaration referring to those application papers must be supported by a supplemental oath or declaration under § 1.67. In either situation, a substitute specification (§ 1.125) is required if the application papers do not comply with paragraphs (a) and (b) of this section.

Applicant Kamorudeen Larry Yusuf made an alteration to page 2 of the oath, and while initialing the alteration, failed to separately date the alteration in compliance with 37 CFR 1.52 (c) (1). Of note is the requirement by § 1.52 (c) (1) that "Any ... alteration ... must be made **before** the signing of any accompanying ... declaration". By failing to independently date the alteration made to the oath, it is impossible to determine when the alteration was made, and therefore it is impossible to conclude with absolute certainty that the alteration was made before signing the declaration as required by § 1.52 (c) (1).

Therefore, because the application was filed with a defective oath, the application was not complete under 37 CFR 1.51 and therefore the petition for accelerated examination must be denied.

Petitioner is reminded of this sentence from M.P.E.P. 708.02(a):

> This opportunity to perfect a petition does not apply to applications that are not in condition for examination on filing.

DECISION

For the above-stated reasons, the petition is **Denied**. The application will therefore be taken up by the examiner for action in its regular turn.

Any inquiry regarding this decision should be directed Gail Hayes, Quality Assurance Specialist, at (571) 272-3591.

_____/Gail Hayes_____
Gail Hayes, Quality Assurance Specialist
Technology Center 2100

RLE

UNITED STATES PATENT AND TRADEMARK OFFICE

Commissioner for Patents
United States Patent and Trademark Office
P.O. Box 1450
Alexandria, VA 22313-1450
www.uspto.gov

ARTHROCARE CORPORATION
ATTN: Matthew Scheele
7500 Rialto Boulevard
Building Two, Suite 100
Austin TX 78735-8532

MAILED

OCT 26 2009

OFFICE OF PETITIONS

In re Application of	:	
Bigley et al.	:	
Application No.: 12/190752	:	ON PETITION
Filing or 371(c) Date: 08/13/2008	:	
Attorney Docket Number: A-25	:	

This is a decision on the "Petition Under 37 C.F.R. § 1.182 to Change the Order of the Inventors Names," filed on September 15, 2009.

The petition is **granted**.

The order of the names of the inventors has been be changed as follows:

1 Robert Bigley
2. Duane W. Marion

A Replacement Filing Receipt is enclosed reflecting the change is enclosed herewith.

This application is being referred to Technology Center Art Unit 3739 for examination in the normal course of business.

Telephone inquiries concerning this decision should be directed to the undersigned at (571) 272-3232.

/Derek L. Woods/
Derek L. Woods
Attorney
Office of Petitions

Enclosure: Replacement Filing Receipt

UNITED STATES PATENT AND TRADEMARK OFFICE

UNITED STATES DEPARTMENT OF COMMERCE
United States Patent and Trademark Office
Address: COMMISSIONER FOR PATENTS
P.O. Box 1450
Alexandria, Virginia 22313-1450
www.uspto.gov

APPLICATION NUMBER	FILING or 371(c) DATE	GRP ART UNIT	FIL FEE REC'D	ATTY.DOCKET.NO	TOT CLAIMS	IND CLAIMS
12/190,752	08/13/2008	3739	1590	A-25	27	4

CONFIRMATION NO. 9412

REPLACEMENT FILING RECEIPT

OC000000038394551

21394
ARTHROCARE CORPORATION
ATTN: Matthew Scheele
7500 Rialto Boulevard
Building Two, Suite 100
Austin, TX 78735-8532

Date Mailed: 10/22/2009

Receipt is acknowledged of this non-provisional patent application. The application will be taken up for examination in due course. Applicant will be notified as to the results of the examination. Any correspondence concerning the application must include the following identification information: the U.S. APPLICATION NUMBER, FILING DATE, NAME OF APPLICANT, and TITLE OF INVENTION. Fees transmitted by check or draft are subject to collection. Please verify the accuracy of the data presented on this receipt. **If an error is noted on this Filing Receipt, please submit a written request for a Filing Receipt Correction. Please provide a copy of this Filing Receipt with the changes noted thereon. If you received a "Notice to File Missing Parts" for this application, please submit any corrections to this Filing Receipt with your reply to the Notice. When the USPTO processes the reply to the Notice, the USPTO will generate another Filing Receipt incorporating the requested corrections**

Applicant(s)

Robert Bigley, Redwood City, CA;
Duane W. Marion, Santa Clara, CA;

Power of Attorney: The patent practitioners associated with Customer Number 21394

Domestic Priority data as claimed by applicant

Foreign Applications

If Required, Foreign Filing License Granted: 08/22/2008

The country code and number of your priority application, to be used for filing abroad under the Paris Convention, is **US 12/190,752**

Projected Publication Date: 02/18/2010

Non-Publication Request: No

Early Publication Request: No

Title

SYSTEMS AND METHODS FOR SCREEN ELECTRODE SECUREMENT

Preliminary Class

606

PROTECTING YOUR INVENTION OUTSIDE THE UNITED STATES

Since the rights granted by a U.S. patent extend only throughout the territory of the United States and have no effect in a foreign country, an inventor who wishes patent protection in another country must apply for a patent in a specific country or in regional patent offices. Applicants may wish to consider the filing of an international application under the Patent Cooperation Treaty (PCT). An international (PCT) application generally has the same effect as a regular national patent application in each PCT-member country. The PCT process **simplifies** the filing of patent applications on the same invention in member countries, but **does not result** in a grant of "an international patent" and does not eliminate the need of applicants to file additional documents and fees in countries where patent protection is desired.

Almost every country has its own patent law, and a person desiring a patent in a particular country must make an application for patent in that country in accordance with its particular laws. Since the laws of many countries differ in various respects from the patent law of the United States, applicants are advised to seek guidance from specific foreign countries to ensure that patent rights are not lost prematurely.

Applicants also are advised that in the case of inventions made in the United States, the Director of the USPTO must issue a license before applicants can apply for a patent in a foreign country. The filing of a U.S. patent application serves as a request for a foreign filing license. The application's filing receipt contains further information and guidance as to the status of applicant's license for foreign filing.

Applicants may wish to consult the USPTO booklet, "General Information Concerning Patents" (specifically, the section entitled "Treaties and Foreign Patents") for more information on timeframes and deadlines for filing foreign patent applications. The guide is available either by contacting the USPTO Contact Center at 800-786-9199, or it can be viewed on the USPTO website at http://www.uspto.gov/web/offices/pac/doc/general/index.html.

For information on preventing theft of your intellectual property (patents, trademarks and copyrights), you may wish to consult the U.S. Government website, http://www.stopfakes.gov. Part of a Department of Commerce initiative, this website includes self-help "toolkits" giving innovators guidance on how to protect intellectual property in specific countries such as China, Korea and Mexico. For questions regarding patent enforcement issues, applicants may call the U.S. Government hotline at 1-866-999-HALT (1-866-999-4158).

LICENSE FOR FOREIGN FILING UNDER

Title 35, United States Code, Section 184

Title 37, Code of Federal Regulations, 5.11 & 5.15

GRANTED

The applicant has been granted a license under 35 U.S.C. 184, if the phrase "IF REQUIRED, FOREIGN FILING LICENSE GRANTED" followed by a date appears on this form. Such licenses are issued in all applications where the conditions for issuance of a license have been met, regardless of whether or not a license may be required as

set forth in 37 CFR 5.15. The scope and limitations of this license are set forth in 37 CFR 5.15(a) unless an earlier license has been issued under 37 CFR 5.15(b). The license is subject to revocation upon written notification. The date indicated is the effective date of the license, unless an earlier license of similar scope has been granted under 37 CFR 5.13 or 5.14.

This license is to be retained by the licensee and may be used at any time on or after the effective date thereof unless it is revoked. This license is automatically transferred to any related applications(s) filed under 37 CFR 1.53(d). This license is not retroactive.

The grant of a license does not in any way lessen the responsibility of a licensee for the security of the subject matter as imposed by any Government contract or the provisions of existing laws relating to espionage and the national security or the export of technical data. Licensees should apprise themselves of current regulations especially with respect to certain countries, of other agencies, particularly the Office of Defense Trade Controls, Department of State (with respect to Arms, Munitions and Implements of War (22 CFR 121-128)); the Bureau of Industry and Security, Department of Commerce (15 CFR parts 730-774); the Office of Foreign AssetsControl, Department of Treasury (31 CFR Parts 500+) and the Department of Energy.

NOT GRANTED

No license under 35 U.S.C. 184 has been granted at this time, if the phrase "IF REQUIRED, FOREIGN FILING LICENSE GRANTED" DOES NOT appear on this form. Applicant may still petition for a license under 37 CFR 5.12, if a license is desired before the expiration of 6 months from the filing date of the application. If 6 months has lapsed from the filing date of this application and the licensee has not received any indication of a secrecy order under 35 U.S.C. 181, the licensee may foreign file the application pursuant to 37 CFR 5.15(b).

UNITED STATES PATENT AND TRADEMARK OFFICE

UNITED STATES DEPARTMENT OF COMMERCE
United States Patent and Trademark Office
Address: COMMISSIONER FOR PATENTS
P.O. Box 1450
Alexandria, Virginia 22313-1450
www.uspto.gov

APPLICATION NO.	FILING DATE	FIRST NAMED INVENTOR	ATTORNEY DOCKET NO.	CONFIRMATION NO.
12/190,758	08/13/2008	Christopher Harris	GB920070233US2	9424

77062 7590 09/17/2008
The Law Firm of Andrea Hence Evans, LLC
14625 Baltimore Ave., #853
Laurel, MD 20707

EXAMINER

ART UNIT	PAPER NUMBER
3629	

MAIL DATE	DELIVERY MODE
09/17/2008	PAPER

Please find below and/or attached an Office communication concerning this application or proceeding.

The time period for reply, if any, is set in the attached communication.

UNITED STATES PATENT AND TRADEMARK OFFICE

Commissioner for Patents
United States Patent and Trademark Office
P.O. Box 1450
Alexandria, VA 22313-1450
www.uspto.gov

MAILED FROM DIRECTORS OFFICE
SEP 17 2008
TECHNOLOGY CENTER 3600

The Law Firm of Andrea Hence Evans, LLC
14625 Baltimore Ave., #853
Laurel MD 20707

In re application of	:	DECISION ON PETITION
Harris et al	:	TO MAKE SPECIAL FOR
Application 12/190,758	:	NEW APPLICATION
Filed: August 13, 2008	:	UNDER 37 CFR 1.102
For: PROGRAMMABLE RFID POSTAGE STAMP		

This is a decision on the petition filed on August 13, 2008, to make the above-identified application special for accelerated examination procedure under 37 C.F.R. § 1.102(d).

The petition to make the application special is DISMISSED.

REGULATION AND PRACTICE

A grantable petition to make special under 37 C.F.R. § 1.102(d) and pursuant to the "Change to Practice for Petitions in Patent Applications to Make Special and for Accelerated Examination" published in the Federal Register on June 26, 2006 (71 Fed. Reg. 36323), must satisfy the following conditions:

I. Conditions Regarding the Application:

1. the application must be a non-reissue utility or design application filed under 37 CFR 1.111(a);

2. the application, the petition and the required fees must be filed electronically using the USPTO's electronic filing system (EFS), or EFS-web; if not filed electronically, a statement asserting that EFS and EFS-web were not available during the normal business hours.

3. at the time of filing, the application must be complete under 37 CFR 1.51 and in condition for examination;

4. the application must contain three or fewer independent claims and twenty or fewer total claims and the claims must be directed to a single invention.

II. Conditions Regarding the Petition:

The petition must:

1. be filed with the application;

2. include a statement that applicant agrees not to separately argue the patentability of any independent claim during any appeal in the application;

3. include a statement that applicant agrees to make an election without traverse in a telephone interview.

4. include a statement that applicant agrees to conduct such an interview when requested by the examiner.

5. include a statement, made based on a good faith belief, that a preexamination search in compliance with the following requirements, was conducted, including an identification of the field of search by United States class and subclass, where applicable, and for database searches, the search logic or chemical structure or sequence used as a query, the name of the file(s) searched and the database service, and the date of the search.

The preexamination search must:

5.1 involve U.S. patents and patent application publications, foreign patent documents, and non-patent literature, unless the applicant can justify with reasonable certainty that no references more pertinent than those already identified are likely to be found in the eliminated sources and includes such a justification with this statement;

5.2. be directed to the claimed invention and encompass all of the features of the claims, giving the claims the broadest reasonable interpretation;

5.3. encompass the disclosed features that may be claimed.

6. must provide in support of the petition an accelerated examination support document.

An accelerated examination support document must include:

6.1. an information disclosure statement (IDS) in compliance with 37 CFR 1.98 citing each reference deemed most closely related to the subject matter of each of the claims;

6.2. an identification of all the limitations in the claims that are disclosed by the reference specifying where the limitation is disclosed in the cited reference;

6.3. a detailed explanation of how each of the claims is patentable over the references cited with particularity required by 37 CFR 1.111(b) and (c);

6.4. a concise statement of the utility of the invention as defined in each of the independent claims (unless the application is a design application);

6.5. a showing of where each limitation of the claims finds support under 35 USC 112, first paragraph, in the written description of the specification. If applicable, the showing must also identify: (1) each means- (or step) plus-function claim element that invokes consideration under 35 USC 112, sixth paragraph; and (2) the structure, material, or acts in the specification that corresponds to each means- (or step) plus-function claim element that invokes consideration under 35 USC 112, sixth paragraph; if the application claims the benefit of one or more applications under title 35, United States Code, the showing must also include where each limitation of the claims finds support under 35 USC 112, first paragraph, in each such application in which such supports exists;

6.6. an identification of any cited references that may be disqualified under 35 USC 103(c).

REVIEW OF FACTS

The petition in this case fails to comply with conditions II.5.2 and II.6.5

As per Condition 11.5.2, the preexamination search must be directed to the claimed invention and encompass all of the features of the claims, giving the claims the broadest reasonable interpretation. Applicant's searches do not incorporate synonyms for the searched terms; therefore, the search queries are deemed to be overly narrow in relation to the scope of the claimed invention. For example, more synonyms should be used to search the rfid/radio frequency concept. Such synonyms might include rfid or (radio adj frequency) or wireless$2 or transponder$1 or ((passive$2 or active$2 or semi-passive$2 or semi-passive$2) near4 (tag$1 or device$1)). Analogous concepts, including other types of wireless networks and devices should be considered as well. More synonyms for reus$4 should also be utilized. Such synonyms might include reus$4 or recycle$3 or multi-use or ((multi$3 or again or repeat$4) near2 (use$1 or usable)) or lifetime or lifelong or forever or indefinite$2 or restamp$3 or re-stamp$3.

The aforementioned concepts should be searched in the postal environment, which may be focused on using the search terms postal or postage or stamp$1 or mail$3 or frank$3.

Applicant emphasizes in section 9(C) (Detailed Explanation of Patentability) that the references fail to teach "A digital electronic paper apparatus comprising: a stamp without a predetermined postage affixed to an article to be mailed, wherein the stamp comprises a top layer having an adhesive layer, and a swiped mart card for encoding the affixed stamp with a unique payment identifier issued by a payment authority and valid for a single payment, and other information such that the visual automatically updates to show a representation of the encoded information and the adhesive is altered through electrostatic manipulation to allow the removal of the affixed stamp so that the stamp may be reused" contributing to the patentability of the claimed invention; therefore, it is important that these limitations be thoroughly searched in order to more confidently make a patentability determination.

A recommended search might be executed in all databases of **West** with the following search queries:

L1 : rfid or (radio adj frequency) or wireless$2 or transponder$1 or ((passive$2 or active$2 or semi adj passive$2 or semi-passive$2) near3 (tag$1 or device$ 1))

L2: ((reus$4 or recycl$3 or multi-use or (multi$3 or again or repeat$4)) near2 ((use$1 or usable) or lifetime or lifelong or forever or indefinite$2 or restamp$3 or re-stamp$3) same (postal or postage or stamp$1 or mail$3 or frank$3) and ((smart or integrated) adj card$ or IC))

L3: L1 and L2

L4: (Layer or level$ or plate$1 or skin$1 or overlay$ or overlaid or top or bottom or middle or between or underneath$ or cover$3) same (postal or postage or stamp$1 or mail$ or frank$3)

L5: L3 and L4

Please keep in mind that these are non-limiting search suggestions and they are only meant to serve as a possible starting point for Applicant's preexamination search. Additional guidance regarding the proper manner of performing and documenting a preexamination search may be found on the following web site: http://www.uspto.gov/web/patents/accelarated/. Applicant is expected to perform more supplemental searches than the sample search queries listed above.

Condition II6.5 requires a showing of where each limitation of the claims finds support under 35 USC 112, first paragraph, in the written description of the specification. Support (if any) for the claimed invention must additionally be shown in the parent application upon which priority is claimed under 35 USC 120. Specifically, for parent application 12/036,563, a listing of where the limitations of the claims find support is necessary.

The petition fails to meet the required conditions to be accorded special status under the accelerated examination procedure.

DECISION

For the above stated reasons, the petition is DISMISSED. The application will therefore be taken up by the examiner for action in its regular turn.

Petitioner is given a single opportunity to perfect the petition. Any request for reconsideration of this decision must be submitted within one (1) month or thirty (30) days, whichever is longer, from the date of this decision. No extensions of time will be granted under 37 CFR 1.136(a) if the request is to be considered timely. Any request for reconsideration must address the deficiencies indicated above.

Petitioner is reminded that, upon granting of the special status of the application on request for reconsideration, the application will be processed expeditiously. However, due to the dismissal of the instant petition, examination may not be completed within twelve months of the filing date of the application.

Any inquiry regarding this decision should be directed to Robert Weinhardt, Business Practice Specialist, at (571) 272-6633, or Romain Jeanty, Primary Examiner, at (571) 272-6732.

C. Michelle Tarver for

Robert A. Weinhardt,
Business Practice Specialist
Technology Center 3600

RW/RJ/ 9/12/08

UNITED STATES PATENT AND TRADEMARK OFFICE

UNITED STATES DEPARTMENT OF COMMERCE
United States Patent and Trademark Office
Address: COMMISSIONER FOR PATENTS
P.O. Box 1450
Alexandria, Virginia 22313-1450
www.uspto.gov

APPLICATION NO.	FILING DATE	FIRST NAMED INVENTOR	ATTORNEY DOCKET NO.	CONFIRMATION NO.
12/190,758	08/13/2008	Christopher Harris	GB920070233US2	9424

77062 7590 11/18/2008
The Law Firm of Andrea Hence Evans, LLC
14625 Baltimore Ave., #853
Laurel, MD 20707

EXAMINER
JABR, FADEY S

ART UNIT	PAPER NUMBER
3628	

MAIL DATE	DELIVERY MODE
11/18/2008	PAPER

Please find below and/or attached an Office communication concerning this application or proceeding.

The time period for reply, if any, is set in the attached communication.

UNITED STATES PATENT AND TRADEMARK OFFICE

Commissioner for Patents
United States Patent and Trademark Office
P.O. Box 1450
Alexandria, VA 22313-1450
www.uspto.gov

The Law Firm of Andrea Hence Evans, LLC
14625 Baltimore Ave., #853
Laurel MD 20707

In re application of	:	**DECISION ON PETITION**
Harris et al.	:	**TO MAKE SPECIAL FOR**
Application No. 12/190,758	:	**NEW APPLICATION**
Filed: August 13, 2008	:	**UNDER 37 CFR 1.102**

For: PROGRAMMABLE RFID POSTAGE STAMPS

This is a decision on the petition filed on August 13, 2008 to make the above-identified application special for accelerated examination procedure under 37 C.F.R. § 1.102(d).

The petition to make the application special is **GRANTED**.

The application is eligible for accelerated examination and the petition complies with the conditions for granting the application special status pursuant to the "Change to Practice for Petitions in Patent Applications to Make Special and for Accelerated Examination" published June 26, 2006, in the Federal Register. (71 Fed. Reg. 36323).

The prosecution of the instant application will be conducted expeditiously according to the following guidelines.

1. The application will be docketed to an examiner and taken up for action within two weeks of the date of this decision.

2. Restriction Practice:
   If the examiner determines that the claims are not directed to a single invention, a telephone request to elect one single invention will be made pursuant to MPEP 812.01. As a prerequisite to the grant of this petition, the applicant has agreed to make an oral election, by telephone, without traverse. If the applicant refuses to make an election without traverse, or the examiner cannot reach the applicant after a reasonable effort, the examiner will treat the first claimed invention (invention defined by claim 1) as having being constructively elected without traverse for examination.

3. Office action:
   If it is determined that, after appropriate consultation, there is a potential rejection or any other issue to be addressed, the examiner will telephone the applicant and arrange an interview to discuss and resolve the issue. An Office action, other than a Notice of Allowance and Fee(s) Due (Notice of Allowance), will not be issued unless either: 1) an interview was conducted but did not result in agreed to action that places the application in condition for allowance, or, 2) a determination is made that an interview would be unlikely to result in the application being placed in condition for allowance, and 3) an internal conference has been held to review any rejection of any claim.

4. Time for Reply:
   An Office action other than a Notice of Allowance or a final Office action will set a shortened statutory period of one month or thirty days, whichever is longer, for reply with no extension of time available under 37 CFR 1.136(a). Failure to timely file a reply within this non-extendible period for reply will result in the abandonment of the application.

5. Reply by Applicant:
   A timely reply to an Office action other than the Notice of Allowance must be submitted electronically via EFS or EFS-web and limited to addressing the rejections, objections and requirement made. Any amendment that attempts to: 1) add claims which would result in more than three pending independent claims or more than twenty pending total claims; 2) present claims not encompassed by the pre-examination search or an updated accelerated examination support document; or 3) present claims that are directed to a non-elected invention or an invention other than that previously claimed and examined in the application, will be treated as not fully responsive and will not be entered.

   For any amendment to the claims (including any new claim) that is not encompassed by the accelerated examination support document, applicant must provide an updated accelerated examination support document that encompasses the amended or new claims at the time of filing of the amendment.

   To proceed expeditiously with the examination, it is recommended that a reply with amendments made to any claim or with any new claim being added be accompanied by an updated accelerated examination support document or a statement explaining how the amended or new claim is supported by the original accelerated examination support document.

6. Information Disclosure Statement (IDS):
   Any IDS filed during prosecution must be submitted electronically via EFS or EFS-web, accompanied by an updated accelerated examination support document, and be in compliance with 37 CFR 1.97 and 1.98.

7. Post-Allowance Processing:
   To expedite processing of the allowed application into a patent, the applicant must: 1) pay the required fees within one month of the date of the Notice of Allowance, and 2) not file any post allowance papers not required by the Office. In no event may the issue fee be paid and accepted later than three months from the date of the Notice of Allowance.

8. After-Final and Appeal Procedures:
   To expedite prosecution, after receiving the final Office action, applicant must: 1) promptly file a notice of appeal, an appeal brief and appeal fees; and 2) not request a pre-appeal brief conference.

   Any amendment, affidavit or other evidence filed after final Office action must comply with applicable rules and the requirements outlined in numbered paragraphs 5 and 6 above.

   On appeal, the application will proceed according to normal appeal procedures. After appeal, the application will again be treated special.

9. Proceedings Outside the Normal Examination Process:
   If the application becomes involved in a proceeding that is outside the normal examination process (e.g., a secrecy order, national security review, interference proceeding, petitions under 37 CFR 1.181, 182 or 183), the application will be treated special before and after such proceeding.

10. Final Disposition:
    The twelve month goal of this accelerated examination procedure ends with a final disposition. The mailing of a final Office action, a Notice of Allowance, the filing of a Notice of Appeal, or the filing of a Request for Continued Examination (RCE) is the final disposition.

    If, during prosecution, a paper is not filed electronically using EFS-web, a reply is filed but is not fully responsive, the application is involved in an appeal, or a proceeding outside normal examination process, the application will still be examined expeditiously,

however, the final disposition may occur more than twelve months from the filing of the application.

Any inquiry regarding this decision should be directed to C. Michelle Tarae at (571) 272-6727, or Robert Weinhardt at (571) 272-6633, both Business Practice Specialists.

C. Michelle Tarae

C. Michelle Tarae
Business Practice Specialist
Technology Center 3600

CMT/RW/11/14/08

UNITED STATES PATENT AND TRADEMARK OFFICE

UNITED STATES DEPARTMENT OF COMMERCE
United States Patent and Trademark Office
Address: COMMISSIONER FOR PATENTS
P.O. Box 1450
Alexandria, Virginia 22313-1450
www.uspto.gov

APPLICATION NO.	FILING DATE	FIRST NAMED INVENTOR	ATTORNEY DOCKET NO.	CONFIRMATION NO.
12/190,839	08/13/2008	Daisuke Kamiyama	JP920080089US1(1963-8045)	9596

85785 7590 04/28/2009
Locke Lord Bissell & Liddell LLP
Attn: IP Docketing
Three World Financial Center
New York, NY 10281-2101

EXAMINER
RODRIGUEZ, PAUL L

ART UNIT	PAPER NUMBER
2123	

NOTIFICATION DATE	DELIVERY MODE
04/28/2009	ELECTRONIC

Please find below and/or attached an Office communication concerning this application or proceeding.

The time period for reply, if any, is set in the attached communication.

Notice of the Office communication was sent electronically on above-indicated "Notification Date" to the following e-mail address(es):

ptopatentcommunication@lockelord.com

UNITED STATES PATENT AND TRADEMARK OFFICE

Commissioner for Patents
United States Patent and Trademark Office
P.O. Box 1450
Alexandria, VA 22313-1450
www.uspto.gov

Locke Lord Bissell & Liddell LLP
Attn: IP Docketing
Three World Financial Center
New York NY 10281-2101

In re Application of: Daisuke Kamiyama et al. Serial No.: 12/190,839 Filed: August 13, 2008 Docket: JP920080089US1(1963-8045) Title: METHOD FOR CAD KNOWLEDGE MANAGEMENT	DECISION ON PETITION TO MAKE SPECIAL FOR NEW APPLICATION UNDER 37 C.F.R. § 1.102 & M.P.E.P. § 708.02

This is a decision on the petition filed on August 13, 2008 to make the above- identified application special for accelerated examination procedure under 37 C.F.R. § 1.102(d).

The petition to make the application special is GRANTED.

The application is eligible for accelerated examination and the petition complies with the conditions for granting the application special status pursuant to the "Change to Practice for Petitions in Patent Applications to Make Special and for Accelerated Examination" published June 26, 2006, in the Federal Register. (71 Fed. Reg. 36323).

The prosecution of the instant application will be conducted expeditiously according to the following guidelines.

1. The application will be docketed to an examiner and taken up for action within two weeks of the date of this decision.

2. Restriction Practice:
   If the examiner determines that the claims are not directed to a single invention, a telephone request to elect one single invention will be made pursuant to MPEP 812.01. As a prerequisite to the grant of this petition, the applicant has agreed to make an oral election, by telephone, without traverse. If the applicant refuses to make an election without traverse, or the examiner cannot reach the applicant after a reasonable effort, the

examiner will treat the first claimed invention (invention defined by claim 1) as having being constructively elected without traverse for examination.

3. Office action:
If it is determined that, after appropriate consultation, there is a potential rejection or any other issue to be addressed, the examiner will telephone the applicant and arrange an interview to discuss and resolve the issue. An Office action, other than a Notice of Allowance and Fee(s) Due (Notice of Allowance), will not be issued unless either: 1) an interview was conducted but did not result in agreed to action that places the application in condition for allowance, or, 2) a determination is made that an interview would be unlikely to result in the application being placed in condition for allowance, and 3) an internal conference has been held to review any rejection of any claim.

4. Time for Reply:
An Office action other than a Notice of Allowance or a final Office action will set a shortened statutory period of one month or thirty days, whichever is longer, for reply with no extension of time available under 37 CFR 1.136(a). Failure to timely file a reply within this non-extendible period for reply will result in the abandonment of the application.

5. Reply by Applicant:
A timely reply to an Office action other than the Notice of Allowance must be submitted electronically via EFS or EFS-web and limited to addressing the rejections, objections and requirement made. Any amendment that attempts to: 1) add claims which would result in more than three pending independent claims or more than twenty pending total claims; 2) present claims not encompassed by the pre-examination search or an updated accelerated examination support document; or 3) present claims that are directed a non-elected invention or an invention other than that previously claimed and examined in the application, will be treated as not fully responsive and will not be entered.

   For any amendment to the claims (including any new claim) that is not encompassed by the accelerated examination support document, applicant must provide an updated accelerated examination support document that encompasses the amended or new claims at the time of filing of the amendment.

   To proceed expeditiously with the examination, it is recommended that a reply with amendments made to any claim or with any new claim being added be accompanied by an updated accelerated examination support document or a statement explaining how the amended or new claim is supported by the original accelerated examination support document.

6. Information Disclosure Statement (IDS):
Any IDS filed during prosecution must be submitted electronically via EFS or EFS-web, accompanied by an updated accelerated examination support document; and be in compliance with 37 CFR 1.97 and 1.98.

7. Post-Allowance Processing:
   To expedite processing of the allowed application into a patent, the applicant must: 1) pay the required fees within one month of the date of the Notice of Allowance, and 2) not file any post allowance papers not required by the Office. In no event may the issue fee be paid and accepted later than three months from the date of the Notice of Allowance.

8. After-Final and Appeal Procedures:
   To expedite prosecution, after receiving the final Office action, applicant must: 1) promptly file a notice of appeal, an appeal brief and appeal fees; and 2) not request a pre-appeal brief conference.

   Any amendment, affidavit or other evidence filed after final Office action must comply with applicable rules and the requirements outlined in numbered paragraphs 5 and 6 above.

   On appeal, the application will proceed according to normal appeal procedures. After appeal, the application will again be treated special.

9. Proceedings Outside the Normal Examination Process:
   If the application becomes involved in a proceeding that is outside the normal examination process (e.g., a secrecy order, national security review, interference proceeding, petitions under 37 CFR 1.181, 182 or 183), the application will be treated special before and after such proceeding.

10. Final Disposition:
    The twelve month goal of this accelerated examination procedure ends with a final disposition. The mailing of a final Office action, a Notice of Allowance, the filing of a Notice of Appeal, or the filing of a Request for Continued Examination (RCE) is the final disposition.

If, during prosecution, a paper is not filed electronically using EFS-web, a reply is filed but is not fully responsive, the application is involved in an appeal, or a proceeding outside normal examination process, the application will still be examined expeditiously, however, the final disposition may occur more than twelve months from the filing of the application.

Any inquiry regarding this decision should be directed to Kakali Chaki, Quality Assurance Specialist, at (571) 272-3719.

/Kakali Chaki/

Kakali Chaki, Quality Assurance Specialist
Technology Center 2100

UNITED STATES PATENT AND TRADEMARK OFFICE

UNITED STATES DEPARTMENT OF COMMERCE
United States Patent and Trademark Office
Address: COMMISSIONER FOR PATENTS
P.O. Box 1450
Alexandria, Virginia 22313-1450
www.uspto.gov

APPLICATION NO.	FILING DATE	FIRST NAMED INVENTOR	ATTORNEY DOCKET NO.	CONFIRMATION NO.
12/190,909	08/13/2008	Kazuyoshi Saito	KAS-6597	9735

86636 7590 07/14/2010
BRUNDIDGE & STANGER, P.C.
2318 MILL ROAD, SUITE 1020
ALEXANDRIA, VA 22314

EXAMINER
WELLS, NIKITA

ART UNIT	PAPER NUMBER
2881	

MAIL DATE	DELIVERY MODE
07/14/2010	PAPER

Please find below and/or attached an Office communication concerning this application or proceeding.

The time period for reply, if any, is set in the attached communication.

UNITED STATES PATENT AND TRADEMARK OFFICE

Commissioner for Patents
United States Patent and Trademark Office
P.O. Box 1450
Alexandria, VA 22313-1450
www.uspto.gov

BRUNDIDGE & STANGER, P.C.
2318 MILL ROAD, SUITE 1020
ALEXANDRIA VA 22314

In re Application of	
SAITO et al.	**: DECISION ON REQUEST TO**
Application No.: 12/190,909	**: PARTICIPATE IN THE PATENT**
Filed: 13 August 2008	**: PROSECUTION HIGHWAY**
Attorney Docket No.: KAS-6597	**: PROGRAM AND PETITION**
For: PARTICLE BEAM THERAPY	**: TO MAKE SPECIAL UNDER**
SYSTEM	**: 37 CFR 1.102(d)**

This is a decision on the request to participate in the Patent Prosecution Highway (PPH) program and the petition under 37 CFR 1.102(d), filed 31 July 2009, to make the above-identified application special.

The request and petition are **GRANTED**.

Discussion

A grantable request to participate in the PPH pilot program and petition to make special require:

1. The U.S. application is

    a. a Paris Convention application which either
        i. validly claims priority under 35 U.S.C. 119(a) and 37 CFR 1.55 to one or more applications filed in the JPO, or
        ii. validly claims priority to a PCT application that contains no priority claims, or

    b. a national stage application under the PCT (an application which entered the national stage in the U.S. from a PCT international application after compliance with 35 U.S.C. 371), which PCT application
        i. validly claims priority to an application filed in the JPO, or
        ii. validly claims priority to a PCT application that contains no priority claims, or
        iii. contains no priority claim, or

    c. a so-called bypass application filed under 35 U.S.C. 111(a) which validly claims benefit under 35 U.S.C. 120 to a PCT application, which PCT application
        i. validly claims priority to an application filed in the JPO, or
        ii. validly claims priority to a PCT application that contains no priority claims, or

iii. contains no priority claim;

2. Applicant must submit a copy of:
   a. The allowable/patentable claim(s) from the JPO application(s);
   b. An English translation of the allowable/patentable claim(s) and
   c. A statement that the English translation is accurate;
3. Applicant must:
   a. Ensure all the claims in the U.S. application must sufficiently correspond or be amended to sufficiently correspond to the allowable/patentable claim(s) in the JPO application(s) and
   b. Submit a claims correspondence table in English;
4. Examination of the U.S. application has <u>not</u> begun;
5. Applicant must submit:
   a. Documentation of prior office action:
      i. a copy of the office action(s) just prior to the "Decision to Grant a Patent" from each of the JPO application(s) containing the allowable/patentable claim(s) or
      ii. if the allowable/patentable claims(s) are from a "Notification of Reasons for Refusal" then the Notification of Reasons for Refusal or
      iii. if the JPO application is a first action allowance then no office action from the JPO is necessary should be indicated on the request/petition form;
   b. An English language translation of the JPO Office action from (5)(a)(i)-(ii) above
   c. A statement that the English translation is accurate;
6. Applicant must submit:
   a. An IDS listing the documents cited by the JPO examiner in the JPO office action (unless already submitted in this application)
   b. Copies of the documents except U.S. patents or U.S. patent application publications (unless already submitted in this application);
7. The required petition fee under 37 CFR 1.17(h).

The request to participate in the PPH pilot program and petition comply with the above requirements. Accordingly, the above-identified application has been accorded "special" status.

Inquiries concerning this decision should be directed to Lee W. Young at 571-272-4549.

All other inquiries concerning the examination or status of the application is accessible in the PAIR system at http://www.uspto.gov/ebc.index.html.

This application will be forwarded to the examiner for action on the merits commensurate with this decision.

Lee W. Young
TQAS
Technology Center 2800

UNITED STATES PATENT AND TRADEMARK OFFICE

UNITED STATES DEPARTMENT OF COMMERCE
United States Patent and Trademark Office
Address: COMMISSIONER FOR PATENTS
P.O. Box 1450
Alexandria, Virginia 22313-1450
www.uspto.gov

APPLICATION NO.	FILING DATE	FIRST NAMED INVENTOR	ATTORNEY DOCKET NO.	CONFIRMATION NO.
12/190,936	08/13/2008	Hitoshi IWAI	330578US2	9793

7590 03/25/2010
OBLON, SPIVAK, MCCLELLAND MAIER & NEUSTADT, L.L.P.
1940 DUKE STREET
ALEXANDRIA, VA 22314

EXAMINER
ELLIS, KEVIN L

ART UNIT	PAPER NUMBER
2117	

NOTIFICATION DATE	DELIVERY MODE
03/25/2010	ELECTRONIC

DECISION GRANTING PETITION UNDER 37 CFR 1.138(d)

The declaration of express abandonment is recognized

This is in response to the petition under 37 CFR 1.138(d), requesting for a refund of any previously paid search fee and excess claims fee in the above-identified application.

The petition is granted.

The express abandonment is recognized. Any previously paid search fee and excess claims fee are hereby refunded.

Telephone inquiries should be directed to the Office of Data Management at (571) 272-4200.

Patent Publication Branch
Office of Data Management

Refund Ref:
[illegible]

Credit Card Refund Total: $512.00

[illegible]

Adjustment date: 03/24/2010 [illegible]
08/14/2008 INTEFSU 00001244 12190936
02 FC:1111 -510.00 OP

FORM PET651G (Rev. 08/07)

UNITED STATES PATENT AND TRADEMARK OFFICE

Commissioner for Patents
United States Patent and Trademark Office
P.O. Box 1450
Alexandria, VA 22313-1450
www.uspto.gov

Patent No. :7671099
Serial No. : 12/191130
Inventor(s) :Ruela Talingting PABALAN, Gary WOODWARD, Manilal DHANAYAKE, Herve ADAM
Issued : 03/02/2010
Title : METHOD FOR SEPARATING CRUDE OIL EMULSIONS
Docket No. : RD 07006

Re: Request for Certificate of Correction

Consideration has been given your request for the issuance of a certificate of correction for the above-identified patent under the provisions of Rule(s) 1.322.

Inventors names and addresses is printed in a patent, are based *solely* on information supplied in the appropriate space in the Application Data Sheet 37 CFR 1.76 Dated Nov. 30, 2009.
As per your request dated March 24, 2010 about the citizenship, This office does not issue Certificate of Correction for citizenship, but the Supplemental Application Data Sheet under 37 CFR 1.41(b) will be attached to the file.

In view of the foregoing, your request, in this matter, is hereby denied.

A Certificate of Correction will be issued to correct the remaining errors noted in your request.

Tasneem Siddiqui
For Mary Diggs
Decisions & Certificates
of Correction Branch
(703) 756-1593 or (703) 756-1814
April 14, 2010

Jericho B. Pacho
8 Cedar Brook Drive / CN 7500
Cranbury, New Jersey 08512

ts/md

UNITED STATES PATENT AND TRADEMARK OFFICE

Commissioner for Patents
United States Patent and Trademark Office
P.O. Box 1450
Alexandria, VA 22313-1450
www.uspto.gov

In re Application of :
George Fernandez Lewis :

Application No. 12191162 :DECISION ON PETITION TO MAKE SPECIAL
Filed: :UNDER 37 CFR 1.102(c)(1)
:

Attorney Docket No.

This is a decision on the electronic petition under 37 CFR 1.102 (c)(1) ,filed 13-AUG-2008 to make the above-identified application special based on applicant's age as set forth in MPEP § 708.02, Section IV.

The petition is **GRANTED**.

A grantable petition to make an application special under 37 CFR 1.102(c)(1), MPEP § 708.02, Section IV: Applicant's Age must include a statement by applicant or a registered practitioner having evidence that applicant is at least 65 years of age. No fee is required.

Accordingly, the above-identified application has been accorded “special” status and will be taken up for action by the examiner upon the completion of all pre-examination processing.

Telephone inquires concerning this electronic decision should be directed to the Electronic Business Center at 866-217-9197.

All other inquires concerning either the examination or status of the application should be directed to the Technology Center.

UNITED STATES PATENT AND TRADEMARK OFFICE

Commissioner for Patents
United States Patent and Trademark Office
P.O. Box 1450
Alexandria, VA 22313-1450
www.uspto.gov

SQUIRE, SANDERS & DEMPSEY LLP
1 MARITIME PLAZA
SUITE 300
SAN FRANCISCO CA 94111

COPY MAILED

APR 21 2009

OFFICE OF PETITIONS

In re Application of	:	
Cheng et al.	:	
Application No. 12/191,209	:	Decision Refusing to Accord
Filed: August 13, 2008	:	Status Under 37 CFR 1.47(a)
Attorney Docket No. 050623.00595	:	

This is a decision on the petition under 37 CFR 1.47(a) filed January 22, 2009.

The petition is **DISMISSED**.

Any request for reconsideration of this decision must be submitted within TWO (2) MONTHS from the mail date of this decision. Extensions of time under 37 CFR 1.136(a) are permitted. No further petition fee is required for the request. Any response should be entitled "Request for Reconsideration of Petition Under 37 CFR 1.47(a)" and may include an oath or declaration executed by the current non-signing inventor(s). **Failure to respond will result in abandonment of the application.**

A grantable petition under 37 CFR 1.47(a) requires

(1) proof that the non-signing inventor cannot be found or reached after diligent effort or that the inventor refused to sign the declaration after having been presented with the application papers (specification, claims, and drawings),
(2) a proper oath or declaration executed by the available joint inventor(s),
(3) the fee of $200 as specified in 37 CFR 1.17(g), and
(4) the last known address of the non-signing inventor(s).

The instant petition fails to satisfy item (1) above.

Petitioner has been unable to locate non-signing inventor Nancy Kirsten. Petitioner has taken some steps to try to locate the Kirsten. Petitioner contacted her last known employer. The employer provided petitioner with the last address and telephone number the employer had for her. Petitioner attempted to contact Kirsten at the address and the telephone number. Mail sent by petitioner was returned because Kirsten no longer lived at the address. The telephone number was disconnected. Petitioner contacted directory assistance to request a telephone number for a Nancy Kirsten in San Carlos. However, directory assistance stated no listing existed for a Nancy Kirsten in San Carlos.

Although petitioner has taken some steps to locate Kirsten, the record fails to show petitioner has made a "diligent effort" to locate the inventor.

Two primary methods to locate an inventor in the United States include contacting directory assistance and internet searches. In this case, petitioner did contact directory assistance but limited the inquiry to San Carlos. However, the inventor may well have moved to a close location that is not in San Carlos. The Office notes San Carlos is near two major cities. Specifically, San Carlos is located about 25 miles away from San Franciso, CA, and about 28 miles away from San Jose, CA.

Petitioner does not state any internet searches were conducted. However, the internet is a simple way to locate many, but certainly not all, individuals. For example, telephone listings for the entire state of California, or the entire country, can be easily searched at sites such as "http://www.whitepages.com/".

The Office notes a internet search conducted by the undersigned located information indicating a "Nancy Kirsten," who previously lived at the last known address listed in the petition, now resides at 9219 E Lakeside Ct, Tucson, AZ 85749. The information also indicates the individual's current telephone number is 520-207-6199. The Office supplies this information as a courtesy and hopes the information assists petitioner in locating the inventor. Please note the Office has not verified that the information is correct and the fact the Agency has supplied the information, should it turn out to be inaccurate, does not release petitioner from the obligation to exercise diligent effort to find the non-signing inventor.

If Nancy Kirsten cannot be contacted at the address or telephone number above, petitioner should feel free to call the undersigned with any questions concerning what steps would, or would not, be sufficient to constitute diligent effort to find the inventor.

Unless filed by EFS Web, further correspondence with respect to this matter should be addressed as follows:

By mail: Mail Stop Petition
Commissioner for Patents
P.O. Box 1450
Alexandria, VA 22313-1450

By facsimile: (571) 273-8300
Attn: Office of Petitions

By hand: U.S. Patent and Trademark Office
Customer Service Window
Randolph Building
401 Dulany Street
Alexandria, VA 22314

Telephone inquiries regarding this communication should be directed to Petitions Attorney Steven Brantley at (571) 272-3203.

Charles Steven Brantley
Senior Petitions Attorney
Office of Petitions

UNITED STATES PATENT AND TRADEMARK OFFICE

Commissioner for Patents
United States Patent and Trademark Office
P.O. Box 1450
Alexandria, VA 22313-1450
www.uspto.gov

Finnegan, Henderson, Farabow, Garrett & Dunner, LLP
901 New York Avenue, NW
Washington, DC 20001-4413

MAILED

AUG 3 1 2009

OFFICE OF PETITIONS

In re Application of	:	
John Smolka	:	
Application No. 12/191,222	:	DECISION ON PETITION
Filed: August 13, 2008	:	TO WITHDRAW
Attorney Docket No. 9145.0053-00	:	FROM RECORD
	:	

This is a decision on the Request to Withdraw as attorney or agent of record under 37 C.F.R. § 1.36(b), filed July 17, 2009.

The request is **NOT APPROVED.**

A grantable request to withdraw as attorney/agent of record must be signed by every attorney/agent seeking to withdraw or contain a clear indication that one attorney is signing on behalf of another/others. The Office requires the practitioner(s) requesting withdrawal to certify that he, she, or they have: (1) given reasonable notice to the client, prior to the expiration of the response period, that the practitioner(s) intends to withdraw from employment; (2) delivered to the client or a duly authorized representative of the client all papers and property (including funds) to which the client is entitled; and (3) notified the client of any responses that may be due and the time frame within which the client must respond, pursuant 37 CFR 10.40(c).

The request cannot be approved because there is no indication that the acts noted in the above-identified certifications have been performed. Refer to Form No. PTO/SB/83 (Updated 4/2008).

All future communications from the Office will continue to be directed to the above-listed address until otherwise notified by applicant.

Telephone inquiries concerning this decision should be directed to the undersigned at 571-272-6735.

/Kimberly A. Inabinet/

Kimberly Inabinet
Petitions Examiner
Office of Petitions

cc: Haynes and Boone, LLP
IP Section
2323 Victory Avenue
Suite 700
Dallas, TX 75219

UNITED STATES PATENT AND TRADEMARK OFFICE

Commissioner for Patents
United States Patent and Trademark Office
P.O. Box 1450
Alexandria, VA 22313-1450
www.uspto.gov

COPY MAILED

OCT 29 2009

OFFICE OF PETITIONS

Finnegan, Henderson, Farabow, Garrett & Dunner, LLP
901 New York Avenue, NW
Washington, DC 20001-4413

In re Application of	:	
John Smolka	:	
Application No. 12/191,222	:	DECISION ON PETITION
Filed: August 13, 2008	:	TO WITHDRAW
Attorney Docket No. 70107.99 (IDT-2376)	:	FROM RECORD
	:	

This is a decision on the renewed Request to Withdraw as attorney or agent of record under 37 C.F.R. § 1.36(b), filed October 6, 2009.

The request is **NOT APPROVED.**

The Office will no longer accept address changes to a new practitioner or law firm filed with a Request, absent the filing of a power of attorney to the new representative. The Office will either change the correspondence address of record to the most current address information provided for the assignee of the entire interest who properly became of record under 37 CFR 3.71 or, if no assignee of the entire interest has properly been made of record under 37 CFR 3.71, the most current address information provided for the first named inventor.

Accordingly, the request to withdraw from record cannot be approved because the request to change the correspondence address does not include a proper power of attorney nor is the address that of: (1) the first named inventor; or (2) an assignee of the entire interest under 37 C.F.R 3.71.

All future communications from the Office will continue to be directed to the above-identified address until otherwise properly notified.

Telephone inquiries concerning this decision should be directed to the undersigned at 571-272-4618.

/Kimberly Inabinet/

Kimberly Inabinet
Petitions Examiner
Office of Petitions

cc: Haynes and Boone, LLP
IP Section
2323 Victory Avenue
Suite 700
Dallas, TX 75213

UNITED STATES PATENT AND TRADEMARK OFFICE

UNITED STATES DEPARTMENT OF COMMERCE
United States Patent and Trademark Office
Address: COMMISSIONER FOR PATENTS
P.O. Box 1450
Alexandria, Virginia 22313-1450
www.uspto.gov

APPLICATION NO.	FILING DATE	FIRST NAMED INVENTOR	ATTORNEY DOCKET NO.	CONFIRMATION NO.
12/191,224		HAJIME NAKAMURA	JP920060120US2	1378

27431 7590 11/05/2008
SHIMOKAJI & ASSOCIATES, P.C.
8911 RESEARCH DRIVE
IRVINE, CA 92618

EXAMINER

ART UNIT	PAPER NUMBER
1794	

MAIL DATE	DELIVERY MODE
11/05/2008	PAPER

Please find below and/or attached an Office communication concerning this application or proceeding.

The time period for reply, if any, is set in the attached communication.

UNITED STATES PATENT AND TRADEMARK OFFICE

Commissioner for Patents
United States Patent and Trademark Office
P.O. Box 1450
Alexandria, VA 22313-1450
www.uspto.gov

SHIMOKAJI & ASSOCIATES, P.C.
8911 RESEARCH DRIVE
IRVINE CA 92618

In re Application of: Hajime NAKAMURA
Application No. 12/191,224
Filed: August 13, 2008
For: METHOD OF AND SYSTEM FOR SIMULATING A LIGHT-EMITTING DEVICE

DECISION ON REQUEST TO PARTICIPATE IN PATENT PROSECUTION HIGHWAY PILOT PROGRAM AND PETITION TO MAKE SPECIAL UNDER 37 CFR 1.102(d)

This is a decision on the request to participate in the Patent Prosecution Highway (PPH) pilot program and the petition under 37 CFR 1.102(d), filed August 13, 2008, to make the above-identified application special.

The petition is **GRANTED.**

A grantable request to participate in the PPH pilot program and petition to make special require:

(1) The U.S. application must validly claim priority under 35 U.S.C. 119(a) to one or more applications filed in the JPO;

(2) Applicant must submit a copy of the allowable/patentable claim(s) from the JPO application(s) along with an English translation thereof and a statement that the English translation is accurate;

(3) All the claims in the U.S. application must sufficiently correspond or be amended to sufficiently correspond to the allowable/patentable claim(s) in the JPO application(s);

(4) Examination of the U.S. application has not begun;

(5) Applicant must submit a copy of all the office actions from each of the JPO application(s) containing the allowable/patentable claim(s) along with an English translation thereof and a statement that the English translation is accurate;

(6) Applicant must submit an IDS listing the documents cited by the JPO examiner in the JPO office action along with copies of documents except U.S. patents or U.S. patent application publications; and

(7) The required petition fee under 37 CFR 1.17(h).

The request to participate in the PPH pilot program and petition are found to comply with the above requirements. Accordingly, the above-identified application has been accorded "special" status.

Telephone inquiries concerning this decision should be directed to Mano Padmanabhan at 571-272-4210.

All other inquiries concerning the examination or status of the application is accessible in the PAIR system at http://www.uspto.gov/ebc/index.html.

The application is being forwarded to the examiner for action on the merits commensurate with this decision.

/Mano Padmanabhan/

Mano Padmanabhan
Quality Assurance Specialist, Technology Center 2100, Workgroup 2180
571-272-4210

UNITED STATES PATENT AND TRADEMARK OFFICE

UNITED STATES DEPARTMENT OF COMMERCE
United States Patent and Trademark Office
Address: COMMISSIONER FOR PATENTS
P.O. Box 1450
Alexandria, Virginia 22313-1450
www.uspto.gov

VIERRA MAGEN/SANDISK CORPORATION
575 MARKET STREET
SUITE 2500
SAN FRANCISCO, CA 94105

Mail Date: 04/21/2010

Applicant	: Tavi Salomon	: DECISION ON REQUEST FOR
Patent Number	: 7666035	: RECALCULATION of PATENT
Issue Date	: 02/23/2010	: TERM ADJUSTMENT IN VIEW
Appliction No	: 12/191,353	: OF WYETH
Filed	: 08/14/2008	:
		:

The Patentee's Request for Recalculation is **DISMISSED.**

This Request is deemed ineligible for consideration for one or more of the following reasons:

(A). The patent for which PTA recalculation is requested is either a design or reissue application or is a reexamination proceeding;

(B). The patent for which PTA recalculation is requested resulted from a utility or plant application filed under 35 USC 111(a) before May 29, 2000 and no CPA filed in the application on/after May 29, 2000;

(C). The patent for which PTA recalculation is requested resulted from an international application in which the international filing date was before May 29, 2000 and no CPA filed in the application on/after May 29, 2000;

(D). The patent for which PTA recalculation is requested issued on/after March 2, 2010;

(E). The Request for Recalculation was filed more than 180 days after the grant date of the patent and the request was not filed within two months of a dismissal of a request for reconsideration of the of the patent term under 37 CFR 1.705(d);

(F). The Request for Recalculation is not solely limited to USPTO pre-Wyeth interpretation of 35 U.S.C. 154(b)(2)(A);

or

(G). A civil action was filed pursuant to 35 U.S.C. 154(b)(4)(A)concerning the same patent at issue in this request.

Patentee may file a reply to this decision dismissing the Request for Recalculation. Patentee must file such reply within one month or thirty days, whichever is longer, of the mail date of the decision dismissing the Request for Recalculation. No fee is required if patentee is asserting in the reply that the dismissal for ineligibility is improper.

Patentee should use document code PET.OP if electronically filing a reply to this dismissal. If the USPTO finds that the request was improperly deemed ineligible, the USPTO will mail applicant a recalculation determination.

Patentee should be aware that in order to preserve the right to review in the United States District Court for the District of Columbia of the USPTO patent term adjustment determination, patentee must ensure that he or she also take the steps required under 35 U.S.C. 154(b)(4)(A). Nothing in the request for recalculation should be construed as providing an alternative time frame for commencing a civil action under 35 U.S.C. 154 (b)(4)(A).

Any questions concerning this decision should be directed to the Office of Patent Legal Administration at 571-272-7702.

UNITED STATES PATENT AND TRADEMARK OFFICE

Commissioner for Patents
United States Patent and Trademark Office
P.O. Box 1450
Alexandria, VA 22313-1450
www.uspto.gov

ZIOLKOWSKI PATENT SOLUTIONS GROUP, SC (ITW)
136 S WISCONSIN ST
PORT WASHINGTON WI 53074

COPY MAILED
JUL 20 2009
OFFICE OF PETITIONS

In re Application of	:	
Salsich et al.	:	DECISION ON PETITION
Application No. 12/191,423	:	TO WITHDRAW
Filed: August 14, 2008	:	FROM RECORD
Attorney Docket No. ITW7510.205	:	

This is a decision on the request to withdraw as attorney of record under 37 C.F.R. § 1.36, filed June 18, 2009.

The request is **NOT APPROVED**.

The Office will only accept correspondence address changes to the most current address information provided for the assignee of the entire interest *who properly became of record under 37 CFR 3.71,* or, if no assignee of the entire interest has properly been made of record, the most current address information provided for the first named inventor. 37 CFR 3.71(c) states:

> *An assignee becomes of record either in a national patent application or a reexamination proceeding by filing a statement in compliance with § 3.73(b) that is signed by a party who is authorized to act on behalf of the assignee.*

Therefore, as there is currently no Statement under 37 CFR 3.73(b) currently of record in the instant application, the Office cannot change the correspondence address to the address on the Request to Withdraw.

All future communications from the Office will continue to be directed to the above-listed address until otherwise notified by applicant.

Currently, there is no outstanding Office action that requires a reply.

Telephone inquires concerning this decision should be directed to Petitions Examiner Joan Olszewski at (571) 272-7751. All other inquires concerning either the examination or status of the application should be directed to the Technology Center.

/Liana Walsh/
Liana Walsh
Petitions Examiner
Office of Petitions

UNITED STATES PATENT AND TRADEMARK OFFICE

Commissioner for Patents
United States Patent and Trademark Office
P.O. Box 1450
Alexandria, VA 22313-1450
www.uspto.gov

ZIOLKOWSKI PATENT SOLUTIONS GROUP, SC (ITW)
136 S WISCONSIN ST
PORT WASHINGTON WI 53074

MAILED

JUL 20 2009

OFFICE OF PETITIONS

In re Application of	:	
Salsich et a.	:	DECISION ON PETITION
Application No. 12/191,440	:	TO WITHDRAW
Filed: August 14, 2008	:	FROM RECORD
Attorney Docket No. ITW7510.206	:	

This is a decision on the request to withdraw as attorney of record under 37 C.F.R. § 1.36, filed June 18, 2009.

The request is **NOT APPROVED**.

The Office will only accept correspondence address changes to the most current address information provided for the assignee of the entire interest *who properly became of record under 37 CFR 3.71,* or, if no assignee of the entire interest has properly been made of record, the most current address information provided for the first named inventor. 37 CFR 3.71(c) states:

> *An assignee becomes of record either in a national patent application or a reexamination proceeding by filing a statement in compliance with § 3.73(b) that is signed by a party who is authorized to act on behalf of the assignee.*

Further, a review of current USPTO records does not list any recorded assignment concerning the above-identified application. Therefore, as there is currently no Statement under 37 CFR 3.73(b) currently of record in the instant application, the Office cannot change the correspondence address to the address on the Request to Withdraw.

All future communications from the Office will continue to be directed to the above-listed address until otherwise notified by applicant.

Telephone inquires concerning this decision should be directed to Joan Olszewski at 571-272-7751.

/Liana Walsh/
Liana Walsh
Petitions Examiner
Office of Petitions

UNITED STATES PATENT AND TRADEMARK OFFICE

UNITED STATES DEPARTMENT OF COMMERCE
United States Patent and Trademark Office
Address: COMMISSIONER FOR PATENTS
P.O. Box 1450
Alexandria, Virginia 22313-1450
www.uspto.gov

APPLICATION NO.	FILING DATE	FIRST NAMED INVENTOR	ATTORNEY DOCKET NO.	CONFIRMATION NO.
12/191,489	08/14/2008	Frits Herlaar	1458-017	1943

32905 7590 12/02/2009
JONDLE & ASSOCIATES P.C.
858 HAPPY CANYON ROAD SUITE 230
CASTLE ROCK, CO 80108

EXAMINER
BUI, PHUONG T

ART UNIT	PAPER NUMBER
1638	

MAIL DATE	DELIVERY MODE
12/02/2009	PAPER

Please find below and/or attached an Office communication concerning this application or proceeding.

The time period for reply, if any, is set in the attached communication.

UNITED STATES PATENT AND TRADEMARK OFFICE

Commissioner for Patents
United States Patent and Trademark Office
P.O. Box 1450
Alexandria, VA 22313-1450
www.uspto.gov

JONDLE & ASSOCIATES P.C.
858 HAPPY CANYON ROAD SUITE 230
CASTLE ROCK CO 80108

DEC 0 2 2009

In re Application of:
Frits Herlaar
Serial No.: 12/191,489
Filed: August 14, 2008
Attorney Docket No.: **1458-017**

: PETITION DECISION

This is in response to the petition under 37 CFR § 1.59(b), filed November 19, 2009, to expunge information from the above identified application. This application has not been allowed.

Petitioner requests that the Reply to Request for Information under 37 CFR 1.105, and attachment thereto, submitted to the Patent Office on November 19, 2009, be expunged from the record. Petitioner states either: (A) that the information contains trade secret material, proprietary material and/or material that is subject to a protective order which has not been made public; or (B) that the information submitted was unintentionally submitted and the failure to obtain its return would cause irreparable harm to the party who submitted the information or to the party in interest on whose behalf the information was submitted, and the information has not otherwise been made public. The petition fee set forth in 37 CFR § 1.17(g) has been paid.

This is an examined application which is currently under non-final rejection. As such the information provided has been reviewed, in part, but proceedings in the application have not been terminated. As stated in M.P.E.P. 724, upon allowance or other action closing prosecution in an application, petition may be made for return of Proprietary information. The information cannot be expunged at this time.

The petition is **DISMISSED**. Petitioner may resubmit the petition subsequent to a Notice of Allowability or *ex parte Quayle* action being mailed in the application. No additional petition fee will be required at that time.

Should there be any questions about this decision please contact Marianne C. Seidel by letter addressed to Director, TC 1600, at the address listed above, or by telephone at 571-272-0584 or by facsimile sent to the general Office facsimile number, 703-872-9306.

Marianne C. Seidel
Quality Assurance Specialist
Technology Center 1600

UNITED STATES PATENT AND TRADEMARK OFFICE

Commissioner for Patents
United States Patent and Trademark Office
P.O. Box 1450
Alexandria, VA 22313-1450
www.uspto.gov

GREENBERG TRAURIG, LLP
200 PARK AVE.
P.O. BOX 677
FLORHAM PARK, NJ 07932

COPY MAILED

DEC 03 2009

OFFICE OF PETITIONS

In re Application of	:	
Gordana Vunjak-Novakovic, et al.	:	
Application No. 12/191,490	:	DECISION ON PETITION
Filed: August 14, 2008	:	TO MAKE SPECIAL UNDER
Attorney Docket No. 103248-010519	:	37 CFR 1.102(c)(1)
	:	

This is a decision on the petition under 37 CFR 1.102(c)(1), filed October 6, 2009, to make the above-identified application special based on applicant's age as set forth in M.P.E.P. § 708.02, Section IV.

The petition is **GRANTED**.

A grantable petition to make an application special under 37 CFR 1.102(c)(1) and MPEP § 708.02, Section IV: Applicant's Age must be accompanied by evidence showing that at least one of the applicants is 65 years of age, or more, such as a birth certificate or a statement by applicant. No fee is required

The instant petition includes a statement from applicant's representative that he is in possession of proof that applicant Arthur A. Gertzman's age. Accordingly, the above-identified application has been accorded "special" status.

Telephone inquiries concerning this decision should be directed to undersigned at 571-272-1642. All other inquiries concerning either the examination or status of the application should be directed to the Technology Center.

The application is being forwarded to the Technology Center Art Unit 1657 for action on the merits commensurate with this decision.

/AMW/
April M. Wise
Petitions Examiner
Office of Petitions

UNITED STATES PATENT AND TRADEMARK OFFICE

Commissioner for Patents
United States Patent and Trademark Office
P.O. Box 1450
Alexandria, VA 22313-1450
www.uspto.gov

PATENT GROUP 2N
JONES DAY
NORTH POINT
901 LAKESIDE AVENUE
CLEVELAND, OH 44114

MAILED

JAN 07 2010

OFFICE OF PETITIONS

In re Application of	:	
Douglas B. Noyes et al	:	
Application No. 12/191,504	:	DECISION ON PETITION
Filed: August 14, 2008	:	TO WITHDRAW
Attorney Docket No. 455967-100019	:	FROM RECORD
	:	

This is a decision on the Request to Withdraw as attorney or agent of record under 37 C.F.R. § 1.36(b), filed November 4, 2009.

The request is **APPROVED**.

The request was signed by Joseph M. Sauer on behalf of all the practitioners of record.

Applicant is reminded that there is no attorney of record at this time.

The request to change the correspondence of record is not acceptable as the requested correspondence address is not that of: (1) the first named signing inventor; or (2) an intervening assignee of the entire interest under 37 C.F.R 3.71. All future communications from the Office will be directed to the first named signing inventor or the assignee of the entire interest at the first copied address below until otherwise properly notified by the applicant.

Telephone inquiries concerning this decision should be directed to Irvin Dingle at (571) 272-3210.

/Irvin Dingle/
Irvin Dingle
Petitions Examiner
Office of Petitions

cc: Douglas B. Noyes
2254 North Second Avenue
Upland, CA 91784

cc: Michael A. Tomasulo
Dickstein Shapiro LLP
2049 Century Park East
Suite 700
Los Angeles, CA 90067

UNITED STATES PATENT AND TRADEMARK OFFICE

UNITED STATES DEPARTMENT OF COMMERCE
United States Patent and Trademark Office
Address: COMMISSIONER FOR PATENTS
P.O. Box 1450
Alexandria, Virginia 22313-1450
www.uspto.gov

APPLICATION NUMBER	FILING OR 371(C) DATE	FIRST NAMED APPLICANT	ATTY. DOCKET NO./TITLE
12/191,504	08/14/2008	Douglas B. Noyes	455967-100019

CONFIRMATION NO. 1978

POWER OF ATTORNEY NOTICE

24325
PATENT GROUP 2N
JONES DAY
NORTH POINT
901 LAKESIDE AVENUE
CLEVELAND, OH 44114

OC000000039468063

Date Mailed: 01/06/2010

NOTICE REGARDING CHANGE OF POWER OF ATTORNEY

This is in response to the Power of Attorney filed 11/04/2009.

- The withdrawal as attorney in this application has been accepted. Future correspondence will be mailed to the new address of record. 37 CFR 1.33.

/idingle/

Office of Data Management, Application Assistance Unit (571) 272-4000, or (571) 272-4200, or 1-888-786-0101

UNITED STATES PATENT AND TRADEMARK OFFICE

UNITED STATES DEPARTMENT OF COMMERCE
United States Patent and Trademark Office
Address: COMMISSIONER FOR PATENTS
P.O. Box 1450
Alexandria, Virginia 22313-1450
www.uspto.gov

APPLICATION NUMBER	FILING OR 371(C) DATE	FIRST NAMED APPLICANT	ATTY. DOCKET NO./TITLE
12/191,504	08/14/2008	Douglas B. Noyes	455967-100019

CONFIRMATION NO. 1978

POA ACCEPTANCE LETTER

Douglas B. Noyes
2254 North Second Avenue
Upland, CA 91784

OC000000039468094

Date Mailed: 01/06/2010

NOTICE OF ACCEPTANCE OF POWER OF ATTORNEY

This is in response to the Power of Attorney filed 11/04/2009.

The Power of Attorney in this application is accepted. Correspondence in this application will be mailed to the above address as provided by 37 CFR 1.33.

/idingle/

Office of Data Management, Application Assistance Unit (571) 272-4000, or (571) 272-4200, or 1-888-786-0101

UNITED STATES PATENT AND TRADEMARK OFFICE

Commissioner for Patents
United States Patent and Trademark Office
P.O. Box 1450
Alexandria, VA 22313-1450
www.uspto.gov

In re Application of :
Craig W. Roddy :

Application No. 12191529 :DECISION ON PETITION TO MAKE SPECIAL
Filed: :UNDER 37 CFR 1.102(c)(1)
:

Attorney Docket No. HES 2008-IP-008229U1

This is a decision on the electronic petition under 37 CFR 1.102 (c)(1) ,filed 14-AUG-2008 to make the above-identified application special based on applicant's age as set forth in MPEP § 708.02, Section IV.

The petition is **GRANTED**.

A grantable petition to make an application special under 37 CFR 1.102(c)(1), MPEP § 708.02, Section IV: Applicant's Age must include a statement by applicant or a registered practitioner having evidence that applicant is at least 65 years of age. No fee is required.

Accordingly, the above-identified application has been accorded “special” status and will be taken up for action by the examiner upon the completion of all pre-examination processing.

Telephone inquires concerning this electronic decision should be directed to the Electronic Business Center at 866-217-9197.

All other inquires concerning either the examination or status of the application should be directed to the Technology Center.

UNITED STATES PATENT AND TRADEMARK OFFICE

Commissioner for Patents
United States Patent and Trademark Office
P.O. Box 1450
Alexandria, VA 22313-1450
www.uspto.gov
DIW Oct-08

MCANDREWS HELD & MALLOY, LTD
500 WEST MADISON STREET
SUITE 3400
CHICAGO IL 60661

COPY MAILED

OCT 22 2008

OFFICE OF PETITIONS

In re Application of	:	
Rofougaran et al.	:	DECISION ON PETITION
Application Number: 12/191553	:	
Filing Date: 08/14/2008	:	
Attorney Docket Number:	:	
19153US02	:	

This is a decision in response to the "PETITION FOR ERRONEOUSLY FILED SPECIFICATION," filed on August 14, 2008, which is being treated as a petition under 37 CFR 1.183 requesting waiver of 1.59(a) in that the specification as filed be expunged.

The petition is **DISMISSED.**

Petitioners assert "[t]he above utility application was filed on August 14, 2008 and assigned Application No. 12/191,553. We ask that you expunge EFS ID 3780927 specification and replace it with EFS ID 3783525.

37 C.F.R. § 1.59 sets forth:

§ 1.59 Expungement of information or copy of papers in application file.
(a)
(1) Information in an application will not be expunged, except as provided in paragraph (b) of this section.
(2) Information forming part of the original disclosure (i.e., written specification including the claims, drawings, and any preliminary amendment specifically incorporated into an executed oath or declaration under §§ 1.63 and 1.175) will not be expunged from the application file.
(b) An applicant may request that the Office expunge information, other than what is excluded by paragraph (a)(2) of this section, by filing a petition under this paragraph. Any petition to expunge information from an application must include the fee set forth in § 1.17(h) and establish to the satisfaction of the Director that the expungement of the information is appropriate in which case a notice granting the petition for expungement will be provided.
(c) Upon request by an applicant and payment of the fee specified in § 1.19(b), the Office will furnish copies of an application, unless the

application has been disposed of (see §§ 1.53(e), (f) and (g)). The Office cannot provide or certify copies of an application that has been disposed of.

[48 FR 2710, Jan. 20, 1983, effective Feb. 27, 1983; 49 FR 554, Jan. 4, 1984, effective Apr. 1, 1984; 49 FR 48416, Dec. 12, 1984, effective Feb. 11, 1985; 50 FR 23123, May 31, 1985, effective Feb. 11, 1985; revised, 60 FR 20195, Apr. 25, 1995, effective June 8, 1995; revised, 62 FR 53131, Oct. 10, 1997, effective Dec. 1, 1997; para. (b) revised, 65 FR 54604, Sept. 8, 2000, effective Nov. 7, 2000; para. (b) revised, 68 FR 14332, Mar. 25, 2003, effective May 1, 2003; revised, 68 FR 38611, June 30, 2003, effective July 30, 2003]

37 CFR § 1.183 sets forth:

§ 1.183 Suspension of rules.
In an extraordinary situation, when justice re-quires, any requirement of the regulations in this part which is not a requirement of the statutes may be suspended or waived by the Director or the Director's designee, sua sponte, or on petition of the interested party, subject to such other requirements as may be imposed. Any petition under this section must be accompanied by the petition fee set forth in § 1.17(f).

[47 FR 41278, Sept. 17, 1982, effective Oct. 1, 1982; revised, 68 FR 14332, Mar. 25, 2003, effective May 1, 2003; revised, 69 FR 56481, Sept. 21, 2004, effective Nov. 22, 2004]

MPEP 724.05(IV) states:

> A petition to expunge a part of the original disclosure must be filed under 37 CFR 1.183, since such a request requires a waiver of the requirements of 37 CFR 1.59(a). Petitions under 37 CFR 1.183 should be directed to the Office of Petitions. The petition must explain why justice requires waiver of the rules to permit the requested material to be expunged. It should be noted that petitions to expunge information which is a part of the original disclosure, such as the specification and drawings, will ordinarily not be favorably entertained. The original disclosures of applications are scanned for record keeping purposes. Accordingly, the grant of a petition to expunge information which is part of the original disclosure would require that the USPTO record of the originally filed application be changed, which may not be possible.

As such, the present petition is considered under 37 CFR 1.183. As stated above, a petition to expunge a portion of the original

disclosure, such as the specification and drawings, will ordinarily not be favorably entertained.

It is noted that the application as filed contains two specifications, each received with a different electronic Acknowledgement Receipt bearing one of the two EFS ID numbers identified in the petition. However, petitioners have not explained why expungement of a portion of the application papers is appropriate.

In particular, petitioners must explain, in any renewed petition, the existence of an extraordinary situation such that justice requires waiver of the rules in that the desired portion of the application be expunged.

As the required showing has not been made, the petition must be dismissed.

If petitioners wish to avoid publication of this application with the incorrect specification, petitioners may wish to consider filing a continuation or divisional application, claiming benefit of the subject application and containing the desired specification, and subsequently file a Petition for Express Abandonment to Avoid Publication under 37 CFR 1.138(c) in this application.

A fee of $400.00 is due for consideration of a petition under 37 CFR 1.183. The fee will be charged to counsel's deposit account, as authorized in the subject petition.

Further correspondence with respect to this matter should be addressed as follows:

By mail: Mail Stop Petition
Commissioner for Patents
P.O. Box 1450
Alexandria, VA 22313-1450

By FAX: (571) 273-8300
Attn: Office of Petitions

By hand: Customer Service Window
Mail Stop Petition
Randolph Building
401 Dulany Street
Alexandria, VA 22314

The application is being referred to the Office of Patent Application Processing for further processing.

Telephone inquiries related to this decision only should be directed to Senior Petitions Attorney Douglas I. Wood at (571) 272-3231.

Anthony Knight
Supervisor
Office of Petitions

UNITED STATES PATENT AND TRADEMARK OFFICE

Commissioner for Patents
United States Patent and Trademark Office
P.O. Box 1450
Alexandria, VA 22313-1450
www.uspto.gov

MAIL

DEC 23 2008

DIRECTOR'S OFFICE
TECHNOLOGY CENTER 2600

IBM - SPP
SHIMOKAJI & ASSOCIATES, P.C.
8911 Research Drive
Irvine CA 92618

In re Application of:
POMERANTZ, ORI
Serial No.: 12/191,617
Filed: August 14, 2008
Attorney Docket number: **AUS920080613US1**
Title: **AUTO SHUTOFF FOR PORTABLE AUDIO DEVICES**

DECISION ON PETITION TO MAKE SPECIAL FOR NEW APPLICATION UNDER 37 C.F.R. § 1.102 & M.P.E.P. § 708.02

This is a decision on the petition filed on August 14, 2008 to make the above-identified application special for accelerated examination procedure under 37 C.F.R. § 1.102(d).

The petition to make the application special is **DISMISSED**.

REGULATION AND PRACTICE

A grantable petition to make special under 37 C.F.R. § 1.102(d) and pursuant to the "Change to Practice for Petitions in Patent Applications to Make Special and for Accelerated Examination" published in the Federal Register on June 26, 2006 (71 Fed. Reg. 36323), must satisfy the following conditions:

I. Conditions Regarding the Application:

1. the application must be a non-reissue utility or design application filed under 37 CFR 1.111(a);
2. the application, the petition and the required fees must be filed electronically using the USPTO's electronic filing system (EFS), or EFS-web; if not filed electronically, a statement asserting that EFS and EFS-web were not available during the normal business hours.
3. at the time of filing, the application must be complete under 37 CFR 1.51 and in condition for examination;
4. the application must contain three or fewer independent claims and twenty or fewer total claims and the claims must be directed to a single invention.

II. Conditions Regarding the Petition:

The petition must:

1. be filed with the application;

2. include a statement that applicant agrees not to separately argue the patentability of any independent claim during any appeal in the application;

3. include a statement that applicant agrees to make an election without traverse in a telephone interview.

4. include a statement that applicant agrees to conduct such an interview when requested by the examiner.

5. include a statement, made based on a good faith belief, that a preexamination search in compliance with the following requirements, was conducted, including an identification of the filed of search by United States class and subclass, where applicable, and for database searches, the search logic or chemical structure or sequence used as a query, the name of the file(s) searched and the database service, and the date of the search.

The preexamination search must:

5.1 involve U.S. patents and patent application publications, foreign patent documents, and non-patent literature, unless the applicant can justify with reasonable certainty that no references more pertinent than those already identified are likely to be found in the eliminated sources and includes such a justification with this statement;

5.2. be directed to the claimed invention and encompass all of the features of the claims, giving the claims the broadest reasonable interpretation;

5.3. encompass the disclosed features that may be claimed.

6. must provide in support of the petition an accelerated examination support document.

An accelerated examination support document must include:

6.1. an information disclosure statement (IDS) in compliance with 37 CFR 1.98 citing each reference deemed most closely related to the subject matter of each of the claims;

6.2. an identification of all the limitations in the claims that are disclosed by the reference specifying where the limitation is disclosed in the cited reference;

6.3. a detailed explanation of how each of the claims are patentable over the references cited with particularity required by 37 CFR 1.111(b) and (c);

6.4. a concise statement of the utility of the invention as defined in each of the independent claims (unless the application is a design application);

6.5. a showing of where each limitation of the claims finds support under 35 USC 112, first paragraph, in the written description of the specification. If applicable, the showing must also identify: (1) each means- (or step) plus-function claim element that invokes consideration under 35 USC 112, sixth paragraph; and (2) the structure, material, or acts in the specification that corresponds to each means- (or step) plus-function claim element that invokes consideration under 35 USC 112, sixth paragraph; if the application claims the benefit of one or more applications under title 35, United States Code, the showing must also include where each limitation of the claims finds support under 35 USC 112, first paragraph, in each such application in which such supports exists;

6.6. an identification of any cited references that may be disqualified under 35 USC 103(c).

REVIEW OF FACTS

The conditions set forth under section I. above are considered to have been met. However, the petition fails to comply with conditions set forth under section II, items 5.2, 5.3, 6.2, and 6.3.

For these reasons cited above, the petition fails to meet the required conditions to be accorded special status under the accelerated examination procedure.

Regarding the requirement in items 5.2 and 5.3 above, the preexamination search document provided with the instant petition is deficient as follows:

The US field of search and database searches which are to be provided under section 8(A) are not sufficient. In addition to the search areas provided, applicant would also need to search in the following class/subclasses:
381/55-59,77,81,85,122,334.

If any request for reconsideration is filed, an updated preexamination search must be conducted as per item 5.1 above, and the Preexamination Search Document must be amended to indicate such; a new Information Disclosure Statement should be filed to cite any newly found prior art, and the Accelerated Examination Support Document must also be amended to include the necessary reference and discussion of any newly found and cited prior art in accordance with all of items 6 through 6.6 above.

Regarding the requirement in item 6.2 above, the Accelerated Examination Support Document is deficient because section 9(B) titled "Identification of Limitations Disclosed by References" provides only a broad general description of the Kim et al. (U.S. Patent No. 5,636,077) reference. The petition fails to identify which claimed limitations are disclosed by the reference and specifying where the limitations are disclosed in the cited reference.

Regarding the requirement in item 6.3 above, the Accelerated Examination Support Document is deficient because the section titled "Detailed Explanation of Patentability of the Claims over the Cited References" fails to provide a "detailed explanation of how the claim is patentable over ***each*** of the references cited with particularity required by 37 CFR 1.111(b) and (c)" (emphasis added). In section 9(B) of the Accelerated Examination Support Document, petitioner identifies claim limitations that are not taught by each reference individually without clearly identifying which limitations are specifically taught by each reference. In Section 9(C), petitioner identifies claim limitations that all of the references fail to teach or suggest. However, the limitations identified in item 9(B) and 9(C) noted above are in some instances different from reference to reference, thus leading to confusion as to how the claim is patentable over ***each*** of the references cited with particularity required by 37 CFR 1.111(b) and (c). Furthermore, it fails to provide how the claim is patentable over the ***combination*** of the cited references. The petition merely repeats the claimed limitations and explains that the claim is patentably distinguished over each or combination of references cited. Clarification is required.

DECISION

For the above-stated reasons, the petition is **dismissed**. The application will therefore be taken up by the examiner for action in its regular turn.

Petitioner is given a single opportunity to perfect the petition. Any request for reconsideration of this decision must be submitted within 1 (one) month or 30 (thirty) days, whichever is longer, (no extension of time under 37 CFR 1.136(a)) from the date of this decision in order to be considered timely. Any request for reconsideration must address the deficiencies indicated above.

Petitioner is reminded that, upon granting of the special status of the application on request for reconsideration, the application will be processed expeditiously. However, due to the dismissal of the instant petition, examination may not be completed within twelve months of the filing date of the application.

Any inquiry regarding this decision should be directed to Ken Wieder, Quality Assurance Specialist, at (571) 272-2986.

Kenneth A. Wieder
Quality Assurance Specialist
Technology Center 2600
Communications

UNITED STATES PATENT AND TRADEMARK OFFICE

Commissioner for Patents
United States Patent and Trademark Office
P.O. Box 1450
Alexandria, VA 22313-1450
www.uspto.gov

MAIL

FEB 12 2009

DIRECTOR'S OFFICE
TECHNOLOGY CENTER 2600

IBM - SPP
SHIMOKAJI & ASSOCIATES, P.C.
8911 Research Drive
Irvine CA 92618

In re Application of: POMERANTZ, ORI Serial No.: 12/191,617 Filed: August 14, 2008 Title: **AUTO SHUTOFF FOR PORTABLE AUDIO DEVICES**	DECISION ON PETITION TO MAKE SPECIAL FOR NEW APPLICATION UNDER 37 C.F.R. § 1.102 & M.P.E.P. § 708.02

The petition to make the application special is **GRANTED**.

The application is eligible for accelerated examination and the petition complies with the conditions for granting the application special status pursuant to the "Change to Practice for Petitions in Patent Applications to Make Special and for Accelerated Examination" published June 26, 2006, in the Federal Register. (71 Fed. Reg. 36323).

The prosecution of the instant application will be conducted expeditiously according to the following guidelines.

1. The application will be docketed to an examiner and taken up for action within two weeks of the date of this decision.

2. Restriction Practice:
   If the examiner determines that the claims are not directed to a single invention, a telephone request to elect one single invention will be made pursuant to MPEP 812.01. As a prerequisite to the grant of this petition, the applicant has agreed to make an oral election, by telephone, without traverse. If the applicant refuses to make an election without traverse, or the examiner cannot reach the applicant after a reasonable effort, the examiner will treat the first claimed invention (invention defined by claim 1) as having being constructively elected without traverse for examination.

3. Office action:
   If it is determined that, after appropriate consultation, there is a potential rejection or any other issue to be addressed, the examiner will telephone the applicant and arrange an interview to discuss and resolve the issue. An Office action, other than a Notice of

Allowance and Fee(s) Due (Notice of Allowance), will not be issued unless either: 1) an interview was conducted but did not result in agreed to action that places the application in condition for allowance, or, 2) a determination is made that an interview would be unlikely to result in the application being placed in condition for allowance, and 3) an internal conference has been held to review any rejection of any claim.

4. Time for Reply:
An Office action other than a Notice of Allowance or a final Office action will set a shortened statutory period of one month or thirty days, whichever is longer, for reply with no extension of time available under 37 CFR 1.136(a). Failure to timely file a reply within this non-extendible period for reply will result in the abandonment of the application.

5. Reply by Applicant:
A timely reply to an Office action other than the Notice of Allowance must be submitted electronically via EFS or EFS-web and limited to addressing the rejections, objections and requirement made. Any amendment that attempts to: 1) add claims which would result in more than three pending independent claims or more than twenty pending total claims; 2) present claims not encompassed by the pre-examination search or an updated accelerated examination support document; or 3) present claims that are directed a non-elected invention or an invention other than that previously claimed and examined in the application, will be treated as not fully responsive and will not be entered.

   For any amendment to the claims (including any new claim) that is not encompassed by the accelerated examination support document, applicant must provide an updated accelerated examination support document that encompasses the amended or new claims at the time of filing of the amendment.

   To proceed expeditiously with the examination, it is recommended that a reply with amendments made to any claim or with any new claim being added be accompanied by an updated accelerated examination support document or a statement explaining how the amended or new claim is supported by the original accelerated examination support document.

6. Information Disclosure Statement (IDS):
Any IDS filed during prosecution must be submitted electronically via EFS or EFS-web, accompanied by an updated accelerated examination support document, and be in compliance with 37 CFR 1.97 and 1.98.

7. Post-Allowance Processing:
To expedite processing of the allowed application into a patent, the applicant must: 1) pay the required fees within one month of the date of the Notice of Allowance, and 2) not file any post allowance papers not required by the Office. In no event may the issue fee be paid and accepted later than three months from the date of the Notice of Allowance.

8. After-Final and Appeal Procedures:

To expedite prosecution, after receiving the final Office action, applicant must: 1) promptly file a notice of appeal, an appeal brief and appeal fees; and 2) not request a pre-appeal brief conference.

Any amendment, affidavit or other evidence filed after final Office action must comply with applicable rules and the requirements outlined in numbered paragraphs 5 and 6 above.

On appeal, the application will proceed according to normal appeal procedures. After appeal, the application will again be treated special.

9. Proceedings Outside the Normal Examination Process:
   If the application becomes involved in a proceeding that is outside the normal examination process (e.g., a secrecy order, national security review, interference proceeding, petitions under 37 CFR 1.181, 182 or 183), the application will be treated special before and after such proceeding.

10. Final Disposition:
    The twelve month goal of this accelerated examination procedure ends with a final disposition. The mailing of a final Office action, a Notice of Allowance, the filing of a Notice of Appeal, or the filing of a Request for Continued Examination (RCE) is the final disposition.

If, during prosecution, a paper is not filed electronically using EFS-web, a reply is filed but is not fully responsive, the application is involved in an appeal, or a proceeding outside normal examination process, the application will still be examined expeditiously, however, the final disposition may occur more than twelve months from the filing of the application.

Any inquiry regarding this decision should be directed to Ken Wieder, Quality Assurance Specialist, at (571) 272-2986.

Kenneth A. Wieder
Quality Assurance Specialist
Technology Center 2600 Communications

UNITED STATES PATENT AND TRADEMARK OFFICE

UNITED STATES DEPARTMENT OF COMMERCE
United States Patent and Trademark Office
Address: COMMISSIONER FOR PATENTS
P.O. Box 1450
Alexandria, Virginia 22313-1450
www.uspto.gov

APPLICATION NO.	FILING DATE	FIRST NAMED INVENTOR	ATTORNEY DOCKET NO.	CONFIRMATION NO.
12/191,628	08/14/2008	Jen-Chang Yang	Sean-1-N	1190

69107 7590 09/10/2008
AGNEW INTERNATIONAL
PATENT & TRADEMARK LAW FIRM
1300 BRISTOL STREET NORTH
SUITE 100
NEWPORT BEACH, CA 92660

EXAMINER

ART UNIT	PAPER NUMBER
1614	

MAIL DATE	DELIVERY MODE
09/10/2008	PAPER

Please find below and/or attached an Office communication concerning this application or proceeding.

The time period for reply, if any, is set in the attached communication.

UNITED STATES PATENT AND TRADEMARK OFFICE

Commissioner for Patents
United States Patent and Trademark Office
P.O. Box 1450
Alexandria, VA 22313-1450
www.uspto.gov

69107
Agnew International
Patent & Trademark Law Firm
1300 Bristol Street North
Suite 100
Newport Beach, CA 92660

SEP 1 0 2008

In re Application of	:
Jen-Chang Yang	: DECISION ON PETITION TO MAKE
Serial No.: 12/191,628	: SPECIAL FOR NEW APPLICATION
Filed: August 14, 2008	: UNDER 37 C.F.R. § 1.102 & M.P.E.P.
Attorney Docket No.: Sean-1-N	: § 708.02

This is a supplemental decision on the petition filed August 14, 2008, to make the above-identified application special for accelerated examination procedure under 37 C.F.R. § 1.102(d). This decision supersedes the previous decision mailed on April 2nd 2008.

The petition to make the application special is **DENIED**.

REGULATION AND PRACTICE

A grantable petition to make special under 37 C.F.R. § 1.102(d) and pursuant to the "Change to Practice for Petitions in Patent Applications to Make Special and for Accelerated Examination" published in the Federal Register on June 26, 2006 (71 Fed. Reg. 36323), must satisfy the following conditions:

I. Conditions Regarding the Application:

1. the application must be a non-reissue utility or design application filed under 37 CFR 1.111(a);

2. the application, the petition and the required fees must be filed electronically using the USPTO's electronic filing system (EFS), or EFS-web; if not filed electronically, a statement asserting that EFS and EFS-web were not available during the normal business hours.

3. at the time of filing, the application must be complete under 37 CFR 1.51 and in condition for examination;

4. the application must contain three or fewer independent claims and twenty or fewer total claims and the claims must be directed to a single invention.

II. Conditions Regarding the Petition:

The petition must:

1. be filed with the application;

2. include a statement that applicant agrees not to separately argue the patentability of any dependent claim during any appeal in the application;

3. include a statement that applicant agrees to make an election without traverse in a telephone interview.

4. include a statement that applicant agrees to conduct such an interview when requested by the examiner.

5. include a statement, made based on a good faith belief, that a preexamination search in compliance with the following requirements, was conducted, including an identification of the field of search by United States class and subclass, where applicable, and for database searches, the search logic or chemical structure or sequence used as a query, the name of the file(s) searched and the database service, and the date of the search.

The preexamination search must:

5.1 involve U.S. patents and patent application publications, foreign patent documents, and non-patent literature, unless the applicant can justify with reasonable certainty that no references more pertinent than those already identified are likely to be found in the eliminated sources and includes such a justification with this statement;

5.2. be directed to the claimed invention and encompass all of the features of the claims, giving the claims the broadest reasonable expectation;

5.3. encompass the disclosed features that may be claimed.

6. must provide in support of the petition an accelerated examination support document. An accelerated examination support document must include:

6.1. an information disclosure statement (IDS) in compliance with 37 CFR 1.98 citing each reference deemed most closely related to the subject matter of each of the claims;

6.2. an identification of all the limitations in the claims that are disclosed by the reference specifying where the limitation is disclosed in the cited reference;

6.3. a detailed explanation of how each of the claims is patentable over the references cited with particularity required by 37 CFR 1.111(b) and (c);

6.4. a concise statement of the utility of the invention as defined in each of the independent claims (unless the application is a design application);

6.5. a showing of where each limitation of the claims finds support under 35 U.S.C. 112, first paragraph, in the written description of the specification. If applicable, the showing must also identify: (1) each means- (or step) plus-function claim element that invokes consideration under 35 U.S.C. 112, sixth paragraph; and (2) the structure, material, or acts in the specification that corresponds to each means- (or step) plus-function claim element that invokes consideration under 35 U.S.C. 112, sixth paragraph; if the application claims the benefit of one or more applications under title 35, United States Code, the showing must also include where each limitation of the claims finds support under 35 U.S.C. 112, first paragraph, in each such application in which such supports exists;

6.6. an identification of any cited references that may be disqualified under 35 U.S.C. 103(c).

REVIEW OF FACTS

The petition fails to comply with conditions I.3. as indicated above. Therefore, the petition fails to meet the required conditions to be accorded special status under the accelerated examination procedure.

A Notice to File Missing Parts was mailed on August 25, 2008.

The application as filed is not eligible for the accelerated examination under 37 C.F.R. § 1.102(d) because it was not complete under 37 CFR 1.51 and in condition for examination at the time of filing. The mailing of a Notice to File Missing Parts or a Notice of Incomplete Application is evidence that the application was not complete and in condition for examination at the time of filing.

For the above-stated reasons, the petition is **denied.** The application will therefore be taken up by the examiner for action in its regular turn.

Petitioner is given a single opportunity to perfect the petition. Any request for reconsideration of this decision must be submitted within 1 (one) month or 30 (thirty) days, whichever is longer, from the date of this decision in order to be considered timely. Any request for reconsideration must address the deficiencies indicated above.

Petitioner is reminded that, upon granting of the special status of the application on request for reconsideration, the application will be processed expeditiously. However, due to the dismissal of the instant petition, examination may not be completed within twelve months of the filing date of the application.

Any inquiry regarding this decision should be directed to Dave Nguyen, TQAS TC 1600, at (571) 272-0731.

Dave T Nguyen
TC Quality Assurance Specialist
Technology Center 1600

Patent Number Information

Application Number: 10/529438
Assignments

Examiner Number: **77898 / ALI, MOHAMMAD**

Filing or 371(c) Date: **11/28/2005** eDan

Group Art Unit: **3744** IFW Madras

Effective Date: **03/25/2005**

Class/Subclass: **062/494.000**

Application Received: **03/25/2005**

Lost Case: **NO**

Pat. Num./Pub. Num: **7398656/20060144078**

Interference Number:

Issue Date: **07/15/2008**

Unmatched Petition: **NO**

Date of Abandonment: **00/00/0000**

L&R Code: Secrecy Code:**1**

Attorney Docket Number: **052333**

Third Level Review: **NO**

Secrecy Order: **NO**

Status: **150 / PATENTED CASE**

Status Date: **06/25/2008**

Confirmation Number: **2520**

Oral Hearing: **NO**

Title of Invention: **ABSORPTION REFRIGERATING MACHINE**

Appln Info Contents | Petition Info | Atty/Agent Info | Continuity/Reexam | Foreign Data

Search Another: Application # Search

or Patent# Search

PCT / / Search

or PG PUBS # Search

Attorney Docket # Search

Bar Code # Search

To go back, right click here and select Back. To go forward, right click here and select Forward. To refresh, right click here and select Refresh.

Back to OASIS | Home page

UNITED STATES PATENT AND TRADEMARK OFFICE

COMMISSIONER FOR PATENTS
UNITED STATES PATENT AND TRADEMARK OFFICE
P.O. BOX 1450
ALEXANDRIA, VA 22313-1450

SUMMA, ADDITON & ASHE, P.A.
11610 NORTH COMMUNITY HOUSE ROAD
SUITE 200
CHARLOTTE NC 28277

MAILED

NOV 09 2009

OFFICE OF PETITIONS

Applicant: Lee et al.
Appl. No.: 12/191,689
Filing Date: August 14, 2008
Title: POLYMER ELECTROLYTE MEMBRANE FOR FUEL CELL AND MEMBRANE-ELECTRODE ASSEMBLY AND FUEL CELL INCLUDING THE SAME
Attorney Docket No.: 1224.026
Pub. No.: US 2008/0305379 A1
Pub. Date: December 11, 2008

This is a decision on the request for a corrected patent application publication under 37 CFR 1.221(b), received on February 10, 2009, for the above-identified application.

Applicant requests that the application be republished because the patent application publication contains material error in optical character recognition errors, for example, CF_8 rather than CF_3.

The request is DISMISSED.

37 CFR 1.221 (b) is applicable "only when the Office makes a **material mistake** which is apparent from Office records.... Any request for a corrected publication or revised patent application publication other than provided as provided in paragraph (a) of this section must be filed within two months from the date of the patent application publication. This period is not extendable." (Emphasis added) A material mistake must affect the public's ability to appreciate the technical disclosure of the patent application publication, to determine the scope of the patent application publication, or to determine the scope of the provisional rights that an applicant may seek to enforce upon issuance of a patent.[1]

The errors due to faulty optical character recognition are, in this case, not Office error. The errors are due to the quality and size of the text, which makes it difficult to electronically reproduce by digital imaging and optical character recognition. See 37 CFR 1.52(a)(1)(v), which states that all papers that are to become a permanent part of Office records must be presented "in a form having sufficient clarity and contrast between the paper and the writing to permit . . . electronic capture by use of digital imaging and optical character recognition." As set forth at MPEP 1121, "applications with poor quality text, which may be acceptable for scanning and examination purposes, may lead to errors in the patent application publication. Correction of

[1] Changes to Implement Eighteen-Month Publication of Patent Applications, 65 FR 57023, 57038 (Sept. 20, 2000), 1239, Off. Gaz. Pat. Office Notices 63, 75 (Oct. 10, 2000) (final rule).

these errors and inclusion of any desired amendments into the text of the originally-filed specification and drawings will only occur if applicant files a request for republication under 37 CFR 1.221(a). They will not be corrected by the Office in a corrected publication under 37 CFR 1.221(b)."

Furthermore, the errors are not material errors, since the misprints do not alter the meaning of the text in such a manner to affect the public's ability to appreciate the technical disclosure of the patent application publication, to determine the scope of the patent application publication, or to determine the scope of the provisional rights that an applicant may seek to enforce upon issuance of a patent. The meaning is clear from the context; the misprinted pendant groups are identifiable on their face as being chemically improper.

The applicant is advised that a "request for republication of an application previously published" may be filed under 37 CFR 1.221 (a). Such a request for republication "must include a copy of the application compliance with the Office's electronic filing system requirements and be accompanied by the publication fee set forth in § 1.18 (d) and the processing fee set forth in § 1.17 (i)." If the request for republication does not comply with the electronic filing system requirements, the republication will not take place and the publication fee set forth in § 1.18 (d) will be refunded. The processing fee will be retained.

Any request for republication under 37 CFR 1.221(a), must be submitted via the EFS system, as a "Pre-Grant Publication" and questions or request for reconsideration of the decision, should be addressed as follows:

By mail to: Mail Stop PGPUB
Commissioner for Patents
P.O. Box 1450
Alexandria, Va. 22313-1450

A guide for filing a request for a Pre-Grant Publication, such as a request for republication, may be found on the link below:

http://www.uspto.gov/ebc/portal/tutorials.htm

Inquiries relating to this matter may be directed to Michael Cygan, Legal Advisor, at (571) 272-7700, or the undersigned at (571) 272-7709.

Mark Polutta
Senior Legal Advisor
Office of Patent Legal Administration
Office of the Deputy Commissioner
for Patent Examination Policy

UNITED STATES PATENT AND TRADEMARK OFFICE

Commissioner for Patents
United States Patent and Trademark Office
P.O. Box 1450
Alexandria, VA 22313-1450
www.uspto.gov

FITZPATRICK CELLA HARPER & SCINTO
1290 AVENUE OF THE AMERICAS
NEW YORK NY 10104-3800

MAILED

JUN 14 2010

OFFICE OF PETITIONS

In re Application of	:	
Haag et al.	:	DECISION ON PETITION
Application No. 12/191,825	:	TO WITHDRAW
Filed: August 14, 2008	:	FROM RECORD
Attorney Docket No. 03875.001300.1	:	

This is a decision on the request to withdraw as attorney of record under 37 C.F.R. § 1.36, filed May 3, 2010.

The request is **NOT APPROVED**.

The Office will only accept correspondence address changes to the most current address information provided for the assignee of the entire interest *who properly became of record under 37 CFR 3.71,* or, if no assignee of the entire interest has properly been made of record, the most current address information provided for the first named inventor. 37 CFR 3.71(c) states:

> *An assignee becomes of record either in a national patent application or a reexamination proceeding by filing a statement in compliance with § 3.73(b) that is signed by a party who is authorized to act on behalf of the assignee.*

According to a review of current USPTO records petitioner has not requested the address be changed to a properly recorded assignee or the first listed inventor. T-Ink, LLC is neither the first named inventor nor the assignee who properly became of record under 37 CFR 3.71. As such, all future communications from the Office will continue to be directed to the above-listed address until otherwise notified by applicant.

Currently, there is no outstanding Office action that requires a reply.

Telephone inquires concerning this decision should be directed to the undersigned at 571-272-7751.

Joan Olszewski

Joan Olszewski
Petitions Examiner
Office of Petitions

UNITED STATES PATENT AND TRADEMARK OFFICE

Commissioner for Patents
United States Patent and Trademark Office
P.O. Box 1450
Alexandria, VA 22313-1450
www.uspto.gov

FITZPATRICK CELLA HARPER & SCINTO
1290 AVENUE OF THE AMERICAS
NEW YORK NY 10104-3800

MAILED

JUL 22 2010

OFFICE OF PETITIONS

In re Application of	:	
Haag et al.	:	DECISION ON PETITION
Application No. 12/191,825	:	TO WITHDRAW
Filed: August 14, 2008	:	FROM RECORD
Attorney Docket No. 03875.001300.1	:	

This is a decision on the renewed Request to Withdraw as attorney or agent of record under 37 C.F.R. § 1.36(b), filed July 2, 2010.

The request is **APPROVED**.

A grantable request to withdraw as attorney/agent of record must be signed by every attorney/agent seeking to withdraw or contain a clear indication that one attorney is signing on behalf of another/others. The Office will require the practitioner(s) to certify that he, she or they have: (1) given reasonable notice to the client, prior to the expiration of the reply period, which the practitioner(s) intends to withdraw from employment; (2) delivered to the client or a duly authorized representative of the client all papers and property (including funds) to which the client is entitled; and (3) notified the client of any replies that may be due and the time frame within which the client must respond, pursuant to 37 CFR 10.40 (c).

The request was signed by Douglas Sharrott on behalf of all attorneys of record who are associated with Customer No. 05514.

All attorneys/agents associated with Customer Number 05514 have been withdrawn. Applicants are reminded that there is no attorney of record at this time.

All future correspondence will be directed to the first named inventor at the address indicated below.

Currently, there is no outstanding Office action that requires a reply.

Telephone inquires concerning this decision should be directed to the undersigned at (571) 272-7751. All other inquires concerning either the examination or status of the application should be directed to the Technology Center.

Joan Olszewski
Petitions Examiner
Office of Petitions

cc: Ronald H. Haag
1891 North Mill Court
Lake Orion, MI 48360

UNITED STATES PATENT AND TRADEMARK OFFICE

UNITED STATES DEPARTMENT OF COMMERCE
United States Patent and Trademark Office
Address: COMMISSIONER FOR PATENTS
P.O. Box 1450
Alexandria, Virginia 22313-1450
www.uspto.gov

TEXAS INSTRUMENTS INCORPORATED
P O BOX 655474, M/S 3999
DALLAS, TX 75265

Mail Date: 08/03/2010

Applicant	: Indumini Ranmuthu	: DECISION ON REQUEST FOR
Patent Number	: 7642819	: RECALCULATION of PATENT
Issue Date	: 01/05/2010	: TERM ADJUSTMENT IN VIEW
Application No	: 12/191,885	: OF WYETH AND NOTICE OF INTENT TO
Filed	: 08/14/2008	: ISSUE CERTIFICATE OF CORRECTION
		:

The Request for Recalculation is **GRANTED** to the extent indicated.

The patent term adjustment has been determined to be **0** days. The USPTO will *sua sponte* issue a certificate of correction reflecting the amount of PTA days determined by the recalculation.

Prior to the issuance of the certificate of correction, the USPTO will afford patentee an opportunity to be heard and request reconsideration. Accordingly, patentee has **one month or thirty (30) days**, whichever is longer, to file a request for reconsideration of this patent term adjustment calculation. See 35 U.S.C. 154(b)(3)(B)(ii) and 37 CFR 1.322(a)(4). No extensions of time will be granted under 37 CFR 1.136.

Patentee should use document code PET.OP if electronically filing a request for reconsideration of this patent term adjustment calculation. The patentee must also include the information required by 37 CFR 1.705(b)(2) and the fee required by 37 CFR 1.18(e). If patentee does not file a timely request for reconsideration of this patent term adjustment calculation including the information required by 37 CFR 1.705(b)(2) and the fee required by 37 CFR 1.18(e), the USPTO will issue a certificate of correction reflecting the PTA determination noted above.

Patentee should be aware that in order to preserve the right to review in the United States District Court for the District of Columbia of the USPTO patent term adjustment determination, patentee must ensure that he or she also take the steps required under 35 U.S.C. 154(b)(4)(A) in a timely manner. Nothing in the request for recalculation should be construed as providing an alternative time frame for commencing a civil action under 35 U.S.C. 154(b)(4)(A).

Any questions concerning this decision should be directed to the Office of Patent Legal Administration at 571-272-7702.

UNITED STATES PATENT AND TRADEMARK OFFICE

UNITED STATES DEPARTMENT OF COMMERCE
United States Patent and Trademark Office
Address: COMMISSIONER FOR PATENTS
P.O. Box 1450
Alexandria, Virginia 22313-1450
www.uspto.gov

TEXAS INSTRUMENTS INCORPORATED
P O BOX 655474, M/S 3999
DALLAS, TX 75265

Mail Date: 07/14/2010

Applicant	: Priscilla E. Escobar-Bowser	: DECISION ON REQUEST FOR
Patent Number	: 7646219	: RECALCULATION of PATENT
Issue Date	: 01/12/2010	: TERM ADJUSTMENT IN VIEW
Application No	: 12/191,910	: OF WYETH AND NOTICE OF INTENT TO
Filed	: 08/14/2008	: ISSUE CERTIFICATE OF CORRECTION
		:

The Request for Recalculation is **GRANTED** to the extent indicated.

The patent term adjustment has been determined to be **0** days. The USPTO will *sua sponte* issue a certificate of correction reflecting the amount of PTA days determined by the recalculation.

Prior to the issuance of the certificate of correction, the USPTO will afford patentee an opportunity to be heard and request reconsideration. Accordingly, patentee has **one month or thirty (30) days**, whichever is longer, to file a request for reconsideration of this patent term adjustment calculation. See 35 U.S.C. 154(b)(3)(B)(ii) and 37 CFR 1.322(a)(4). No extensions of time will be granted under 37 CFR 1.136.

Patentee should use document code PET.OP if electronically filing a request for reconsideration of this patent term adjustment calculation. The patentee must also include the information required by 37 CFR 1.705(b)(2) and the fee required by 37 CFR 1.18(e). If patentee does not file a timely request for reconsideration of this patent term adjustment calculation including the information required by 37 CFR 1.705(b)(2) and the fee required by 37 CFR 1.18(e), the USPTO will issue a certificate of correction reflecting the PTA determination noted above.

Patentee should be aware that in order to preserve the right to review in the United States District Court for the District of Columbia of the USPTO patent term adjustment determination, patentee must ensure that he or she also take the steps required under 35 U.S.C. 154(b)(4)(A) in a timely manner. Nothing in the request for recalculation should be construed as providing an alternative time frame for commencing a civil action under 35 U.S.C. 154(b)(4)(A).

Any questions concerning this decision should be directed to the Office of Patent Legal Administration at 571-272-7702.

UNITED STATES PATENT AND TRADEMARK OFFICE

UNITED STATES DEPARTMENT OF COMMERCE
United States Patent and Trademark Office
Address: COMMISSIONER FOR PATENTS
P.O. Box 1450
Alexandria, Virginia 22313-1450
www.uspto.gov

APPLICATION NO.	FILING DATE	FIRST NAMED INVENTOR	ATTORNEY DOCKET NO.	CONFIRMATION NO.
12/191,998	08/14/2008	Min-Gwan Hyun	ABS-2360-2D US	1911

7590 04/09/2009

Haynes and Boone, LLP
IP Section
2323 Victory Avenue
SUITE 700
Dallas, TX 75219

EXAMINER

ART UNIT	PAPER NUMBER
2833	

MAIL DATE	DELIVERY MODE
04/09/2009	PAPER

DECISION GRANTING PETITION UNDER 37 CFR 1.138(d)

The declaration of express abandonment is recognized

This is in response to the petition under 37 CFR 1.138(d), requesting for a refund of any previously paid search fee and excess claims fee in the above-identified application.

The petition is granted.

The express abandonment is recognized. Any previously paid search fee and excess claims fee are hereby refunded.

Telephone inquiries should be directed to the Office of Data Management at (571) 272-4200.

Tom Farmer

Patent Publication Branch
Office of Data Management

Adjustment date: 04/10/2009 NFARMER
08/15/2008 INTEFSW 00003778 502257 12191998
02 FC:1111 510.00 CR

FORM PET651G (Rev. 08/07)

UNITED STATES PATENT AND TRADEMARK OFFICE

Commissioner for Patents
United States Patent and Trademark Office
P.O. Box 1450
Alexandria, VA 22313-1450
www.uspto.gov

FISH & RICHARDSON, PC
P.O. BOX 1022
MINNEAPOLIS, MN 55440-1022

MAILED

APR 09 2010

OFFICE OF PETITIONS

In re Application of
Patrick Hogue
Application No. 12/192,004
Filed: August 14, 2008
Attorney Docket No. 17026-0004001

DECISION ON PETITION
TO WITHDRAW
FROM RECORD

This is a decision on the Request to Withdraw as attorney or agent of record under 37 C.F.R. § 1.36(b), filed February 8, 2010.

The request is **APPROVED**.

A grantable request to withdraw as attorney/agent of record must be signed by every attorney/agent seeking to withdraw or contain a clear indication that one attorney is signing on behalf of another/others

The request was signed by John C. Phillips on behalf of all attorneys of record who are associated with this application. All attorneys/agents associated with this application have been withdrawn. Applicant is reminded that there is no attorney of record at this time.

The request to change the correspondence of record is not acceptable as the requested correspondence address is not that of: (1) the first named signing inventor; or (2) an intervening assignee of the entire interest under 37 C.F.R 3.71. All future communications from the Office will be directed to the first named signing inventor at the first copied address below until otherwise properly notified by the applicant.

In order to request or take action in a patent matter, the assignee must establish its ownership of the patent to the satisfaction of the Director. In this regard, a Statement under 37 CFR 3.73(b) must have either: (i) documentary evidence of a chain of title from the original owner to the assignee (*e.g.*, copy of an executed assignment), and a statement affirming that the documentary evidence of the chain of title from the original owner to the assignee was or concurrently is being submitted for recordation pursuant to § 3.11; or (ii) a statement specifying where documentary evidence of a chain of title from the original owner to the assignee is recorded in the assignment records of the Office (*e.g.*, reel and frame number).

There is an outstanding Office action mailed February 8, 2010 that requires a reply from the applicant.

Telephone inquiries concerning this decision should be directed to undersigned at 571-272-1642. All other inquiries concerning the examination or status of this application should be directed to the Technology Center.

/AMW/
April M. Wise
Petitions Examiner
Office of Petitions

cc: PATRICK HOGUE
2100 LAKE WASHINGTON BLVD. N. H407
RENTON, WA 98056

cc: PLASMADRIVE, INC.
10500 NE 8TH STREET
SUITE 1776
BELLEVUE, WA 98004

UNITED STATES PATENT AND TRADEMARK OFFICE

UNITED STATES DEPARTMENT OF COMMERCE
United States Patent and Trademark Office
Address: COMMISSIONER FOR PATENTS
P.O. Box 1450
Alexandria, Virginia 22313-1450
www.uspto.gov

APPLICATION NUMBER	FILING OR 371(C) DATE	FIRST NAMED APPLICANT	ATTY. DOCKET NO./TITLE
12/192,004	08/14/2008	Patrick Hogue	17026-0004001

CONFIRMATION NO. 1921

POWER OF ATTORNEY NOTICE

20985
FISH & RICHARDSON, PC
P.O. BOX 1022
MINNEAPOLIS, MN 55440-1022

OC000000041007460

Date Mailed: 04/07/2010

NOTICE REGARDING CHANGE OF POWER OF ATTORNEY

This is in response to the Power of Attorney filed 02/08/2010.

- The withdrawal as attorney in this application has been accepted. Future correspondence will be mailed to the new address of record. 37 CFR 1.33.

/amwise/

Office of Data Management, Application Assistance Unit (571) 272-4000, or (571) 272-4200, or 1-888-786-0101

UNITED STATES PATENT AND TRADEMARK OFFICE

Commissioner for Patents
United States Patent and Trademark Office
P.O. Box 1450
Alexandria, VA 22313-1450
www.uspto.gov

In re Application of
Larry D. Best

Application No. 12192022

Filed: August 14,2008

Attorney Docket No. LBST-28127US

:DECISION ON PETITION TO MAKE SPECIAL
:UNDER 37 CFR 1.102(c)(1)

This is a decision on the electronic petition under 37 CFR 1.102 (c)(1), filed 06-JUL-2009 to make the above-identified application special based on applicant's age as set forth in MPEP § 708.02, Section IV.

The petition is **GRANTED**.

A grantable petition to make an application special under 37 CFR 1.102(c)(1), MPEP § 708.02, Section IV: Applicant's Age must include a statement by applicant or a registered practitioner having evidence that applicant is at least 65 years of age. No fee is required.

Accordingly, the above-identified application has been accorded "special" status and will be taken up for action by the examiner upon the completion of all pre-examination processing.

Telephone inquiries concerning this electronic decision should be directed to the Electronic Business Center at 866-217-9197.

All other inquiries concerning either the examination or status of the application should be directed to the Technology Center.

UNITED STATES PATENT AND TRADEMARK OFFICE

Commissioner for Patents
United States Patent and Trademark Office
P.O. Box 1450
Alexandria, VA 22313-1450
www.uspto.gov

ALLEMAN HALL MCCOY RUSSELL & TUTTLE LLP
806 SW BROADWAY
SUITE 600
PORTLAND, OR 97205-3335

COPY MAILED
SEP 26 2008

In re Application of	:	
Donald Blackmon, et al.	:	
Application No. 12/192,026	:	DECISION ON PETITION
Filed: August 14, 2008	:	TO MAKE SPECIAL UNDER
Attorney Docket No. ENR302DIV	:	37 CFR 1.102(c)(1)
	:	

This is a decision on the petition under 37 CFR 1.102(c)(1), filed August 20, 2008, to make the above-identified application special based on applicant's age as set forth in M.P.E.P. § 708.02, Section IV.

The petition is **GRANTED**.

A grantable petition to make an application special under 37 CFR 1.102(c)(1) and MPEP § 708.02, Section IV: Applicant's Age must be accompanied by evidence showing that at least one of the applicants is 65 years of age, or more, such as a birth certificate or a statement by applicant. No fee is required

The instant petition includes a statement by applicant's attorney that he is in possession of evidence showing applicant's age. Accordingly, the above-identified application has been accorded "special" status.

Telephone inquiries concerning this decision should be directed to undersigned at 571-272-1642.

All other inquiries concerning either the examination or status of the application should be directed to the Technology Center.

The application is being forwarded to the Technology Center Art Unit 1796 for action on the merits commensurate with this decision.

April M. Wise
Petitions Examiner
Office of Petitions

UNITED STATES PATENT AND TRADEMARK OFFICE

Commissioner for Patents
United States Patent and Trademark Office
P.O. Box 1450
Alexandria, VA 22313-1450
www.uspto.gov

In re Application of
Philip M. Hoyt

Application No. 12192030

Filed: August 14,2008

Attorney Docket No. 2105

:DECISION ON PETITION TO MAKE SPECIAL
:UNDER 37 CFR 1.102(c)(1)

This is a decision on the electronic petition under 37 CFR 1.102 (c)(1), filed 09-SEP-2008 to make the above-identified application special based on applicant's age as set forth in MPEP § 708.02, Section IV.

The petition is **GRANTED**.

A grantable petition to make an application special under 37 CFR 1.102(c)(1), MPEP § 708.02, Section IV: Applicant's Age must include a statement by applicant or a registered practitioner having evidence that applicant is at least 65 years of age. No fee is required.

Accordingly, the above-identified application has been accorded "special" status and will be taken up for action by the examiner upon the completion of all pre-examination processing.

Telephone inquiries concerning this electronic decision should be directed to the Electronic Business Center at 866-217-9197.

All other inquiries concerning either the examination or status of the application should be directed to the Technology Center.

UNITED STATES PATENT AND TRADEMARK OFFICE

UNITED STATES DEPARTMENT OF COMMERCE
United States Patent and Trademark Office
Address: COMMISSIONER FOR PATENTS
P.O. Box 1450
Alexandria, Virginia 22313-1450
www.uspto.gov

APPLICATION NO.	FILING DATE	FIRST NAMED INVENTOR	ATTORNEY DOCKET NO.	CONFIRMATION NO.
12/192,030	08/14/2008	Philip M. Hoyt	3558-2-1	1972

7590 03/30/2010

Warren M Pate
WARREN M. PATE, LLC
P.O. Box 9758
Salt Lake City, UT 84109

EXAMINER
DEVITO, ALEX T

ART UNIT	PAPER NUMBER
2856	

NOTIFICATION DATE	DELIVERY MODE
03/30/2010	ELECTRONIC

DECISION GRANTING PETITION UNDER 37 CFR 1.138(d)

The declaration of express abandonment is recognized

This is in response to the petition under 37 CFR 1.138(d), requesting for a refund of any previously paid search fee and excess claims fee in the above-identified application.

The petition is granted.

The express abandonment is recognized. Any previously paid search fee and excess claims fee are hereby refunded.

Telephone inquiries should be directed to the Office of Data Management at (571) 272-4200.

Nimi Farmer

Patent Publication Branch
Office of Data Management

FORM PET651G (Rev. 08/07)

UNITED STATES PATENT AND TRADEMARK OFFICE

Commissioner for Patents
United States Patent and Trademark Office
P.O. Box 1450
Alexandria, VA 22313-1450
www.uspto.gov

MAYER & WILLIAMS PC
251 NORTH AVENUE WEST
2ND FLOOR
WESTFIELD NJ 07090

MAILED

JUL 14 2009

OFFICE OF PETITIONS

In re Application of	:	
Mike Magers	:	DECISION ON PETITION
Application No. 12/192,045	:	TO WITHDRAW
Filed: August 14, 2008	:	FROM RECORD
Attorney Docket No. 2050/80	:	

This is a decision on the request to withdraw as attorney of record under 37 C.F.R. § 1.36, filed June 4, 2009.

The request is **APPROVED**.

A grantable request to withdraw as attorney/agent of record must be signed by every attorney/agent seeking to withdraw or contain a clear indication that one attorney is signing on behalf of another/others. The Office will require the practitioner(s) to certify that he, she or they have: (1) given reasonable notice to the client, prior to the expiration of the reply period, which the practitioner(s) intends to withdraw from employment; (2) delivered to the client or a duly authorized representative of the client all papers and property (including funds) to which the client is entitled; and (3) notified the client of any replies that may be due and the time frame within which the client must respond, pursuant to 37 CFR 10.40 (c).

The request was signed by Mark E. Wieczorek on behalf of all attorneys of record who are associated with Customer No. 27774.

All attorneys/agents associated with Customer Number 27774 have been withdrawn. Applicant is reminded that there is no attorney of record at this time.

All future correspondence will be directed to the assignee at the address indicated below.

Currently, there is no outstanding Office action that requires a reply.

Telephone inquires concerning this decision should be directed to Petitions Examiner Joan Olszewski at (571) 272-7751. All other inquires concerning either the examination or status of the application should be directed to the Technology Center.

/Liana Walsh/
Liana Walsh
Petitions Examiner
Office of Petitions

cc: Innercool Therapies, Inc.
6740 Top Gun Street
San Diego CA 92121

UNITED STATES PATENT AND TRADEMARK OFFICE

Commissioner for Patents
United States Patent and Trademark Office
P.O. Box 1450
Alexandria, VA 22313-1450
www.uspto.gov

LAW OFFICE OF ROBERT E. KASODY,
PROFESSIONAL CORPORATION
6601 CENTER DRIVE WEST, SUITE #500
LOS ANGELES CA 90045

MAILED

JUL 26 2010

OFFICE OF PETITIONS

In re Application of	:	
Gat et al.	:	DECISION ON PETITION
Application No. 12/192,069	:	TO WITHDRAW
Filed: August 14, 2008	:	FROM RECORD
Attorney Docket No. OKSI.11379CP1	:	

This is a decision on the Request to Withdraw as attorney or agent of record under 37 C.F.R. § 1.36(b), filed July 1, 2010.

The request is **APPROVED**.

A grantable request to withdraw as attorney/agent of record must be signed by every attorney/agent seeking to withdraw or contain a clear indication that one attorney is signing on behalf of another/others. The Office will require the practitioner(s) to certify that he, she or they have: (1) given reasonable notice to the client, prior to the expiration of the reply period, which the practitioner(s) intends to withdraw from employment; (2) delivered to the client or a duly authorized representative of the client all papers and property (including funds) to which the client is entitled; and (3) notified the client of any replies that may be due and the time frame within which the client must respond, pursuant to 37 CFR 10.40 (c).

The request was signed by Robert E. Kasody on behalf of all attorneys of record who are associated with Customer No. 70515.

All attorneys/agents associated with Customer Number 70515 have been withdrawn. Applicants are reminded that there is no attorney of record at this time.

All future correspondence will be directed to the first named inventor at the address indicated below.

Currently, there is no outstanding Office that requires a reply.

Telephone inquires concerning this decision should be directed to the undersigned at (571) 272-7751. All other inquires concerning either the examination or status of the application should be directed to the Technology Center.

Joan Olszewski

Joan Olszewski
Petitions Examiner
Office of Petitions

cc: Nahum Gat
19805 Hamilton Ave
Torrance, CA 90502-1341

UNITED STATES PATENT AND TRADEMARK OFFICE

Commissioner for Patents
United States Patent and Trademark Office
P.O. Box 1450
Alexandria, VA 22313-1450
www.uspto.gov

PCE INDUSTRY, INC.
ATT. STEVEN REISS
288 SOUTH MAYO AVENUE
CITY OF INDUSTRY, CA 91789

MAILED

APR 14 2010

OFFICE OF PETITIONS

In re Application of Ying-Cheng Wu et al Application No. 12/192,084 Filed: August 14, 2008 Attorney Docket No. US20158	DECISION DISMISSING PETITION UNDER 37 CFR 1.313(c)(2)

This is a decision on the petition under 37 CFR 1.313(c)(2), filed April 12, 2010, to withdraw the above-identified application from issue after payment of the issue fee.

The petition is **DISMISSED AS MOOT.**

Unfortunately, the petition was not referred to the appropriate deciding official for decision until after the issuance of this application into a patent. However, petitioner's attention is directed to 37 CFR 1.313(d), which states:

> A petition under this section will not be effective to withdraw the application from issue unless it is actually received and granted by the appropriate officials before the date of issue.

In this case, the issue date was April 13, 2010. The petition was not received in the Office of Petitions for consideration until April 13, 2010. Therefore, as the case has now issued, the petition to withdraw from issue cannot be granted.

The request for continued examination (RCE) filed concurrently with the petition is improper in view of the issuance of this application into a patent and will not be processed. Accordingly, the $810 filing fee and the $130 petition fee submitted are unnecessary and will be refunded in due course.

The Information Disclosure Statement has been made of record in the file of the above-identified application without further consideration. See 37 CFR 1.97(i).

Petitioner is advised that while petitions to withdraw from issue may be mailed to the Commissioner for Patents, applicants are cautioned to hand carry or fax petitions to withdraw from issue directly to the Office of Petitions. See MPEP § 1308.

Telephone inquiries should be directed to Irvin Dingle at (571) 272-3210.

/Irvin Dingle/
Irvin Dingle
Petitions Examiner
Office of Petitions

UNITED STATES PATENT & TRADEMARK OFFICE
Washington, D.C. 20231

REQUEST FOR PATENT FEE REFUND

1 Date of Request: 04/13/10

2 Serial/Patent # 12/192,084

	3 Please refund the following fee(s):	4 PAPER NUMBER	5 DATE FILED	6 AMOUNT
	Filing			$
	Amendment			$
	Extension of Time			$
	Notice of Appeal/Appeal			$
X	Petition 1464		04/12/10	$ 130.00
	Issue			$
	Cert of Correction/Terminal Disc.			$
	Maintenance			$
	Assignment			$
X	Other 1801 (RCE)		04/12/10	$ 810.00

7 TOTAL AMOUNT OF REFUND $ 940.00

8 TO BE REFUNDED BY:

	Treasury Check
X	Credit Deposit A/C #:

9 5 0 -- 5 1 4 2

10 REASON:

	Overpayment
	Duplicate Payment
X	No Fee Due (Explanation):

The petition to withdraw from issue was received too late. The case has issued.

11 REFUND REQUESTED BY:

TYPED/PRINTED NAME: Irvin Dingle TITLE: Paralegal

SIGNATURE: /Irvin Dingle/ PHONE: 2-3210

OFFICE: Petitions

****

THIS SPACE RESERVED FOR FINANCE USE ONLY:

APPROVED: KD DATE: 4/15/10

Instructions for completion of this form appear on the back. After completion, attach white and yellow copies to the official file and mail or hand-carry to:

Office of Finance
Refund Branch
Crystal Park One, Room 802B

FORM PTO 1577
(01/90)

PTO/SB/17p (07-09)
Approved for use through 07/31/2012. OMB 0651-0031
U.S. Patent and Trademark Office; U.S. DEPARTMENT OF COMMERCE
Under the Paperwork Reduction Act of 1995, no persons are required to respond to a collection of information unless it displays a valid OMB control number.

PETITION FEE
Under 37 CFR 1.17(f), (g) & (h)
TRANSMITTAL
(Fees are subject to annual revision)

Send completed form to: Commissioner for Patents
P.O. Box 1450, Alexandria, VA 22313-1450

Application Number	12/192,084
Filing Date	August 14, 2008
First Named Inventor	Ying-Cheng Wu
Art Unit	2878
Examiner Name	Sohn, Seung C
Attorney Docket Number	US20158

Enclosed is a petition filed under 37 CFR 1.313 **that requires a processing fee (37 CFR 1.17(f), (g), or (h)). Payment of $** 130 **is enclosed.**

This form should be included with the above-mentioned petition and faxed or mailed to the Office using the appropriate Mail Stop (e.g., Mail Stop Petition), if applicable. *For transmittal of processing fees under 37 CFR 1.17(i), see form PTO/SB/17i.*

Payment of Fees (small entity amounts are NOT available for the petition fees)

☑ The Commissioner is hereby authorized to charge the following fees to Deposit Account No. 50-5142 :
☑ petition fee under 37 CFR 1.17(f), (g) or (h) ☐ any deficiency of fees and credit of any overpayments

☐ Check in the amount of $_____ is enclosed.

☐ Payment by credit card (Form PTO-2038 or equivalent enclosed). Do not provide credit card information on this form.

Petition Fees under 37 CFR 1.17(f): Fee $400 Fee Code 1462
For petitions filed under:
§ 1.36(a) - for revocation of a power of attorney by fewer than all applicants
§ 1.53(e) - to accord a filing date.
§ 1.57(a) - to accord a filing date.
§ 1.182 - for decision on a question not specifically provided for.
§ 1.183 - to suspend the rules.
§ 1.378(e) - for reconsideration of decision on petition refusing to accept delayed payment of maintenance fee in an expired patent.
§ 1.741(b) - to accord a filing date to an application under § 1.740 for extension of a patent term.

Petition Fees under 37 CFR 1.17(g): Fee $200 Fee Code 1463
For petitions filed under:
§ 1.12 - for access to an assignment record.
§ 1.14 - for access to an application.
§ 1.47 - for filing by other than all the inventors or a person not the inventor.
§ 1.59 - for expungement of information.
§ 1.103(a) - to suspend action in an application.
§ 1.136(b) - for review of a request for extension of time when the provisions of section 1.136(a) are not available.
§ 1.295 - for review of refusal to publish a statutory invention registration.
§ 1.296 - to withdraw a request for publication of a statutory invention registration filed on or after the date the notice of intent to publish issued.
§ 1.377 - for review of decision refusing to accept and record payment of a maintenance fee filed prior to expiration of a patent.
§ 1.550(c) - for patent owner requests for extension of time in ex parte reexamination proceedings.
§ 1.956 - for patent owner requests for extension of time in inter partes reexamination proceedings
§ 5.12 - for expedited handling of a foreign filing license.
§ 5.15 - for changing the scope of a license.
§ 5.25 - for retroactive license.

Petition Fees under 37 CFR 1.17(h): Fee $130 Fee Code 1464
For petitions filed under:
§ 1.19(g) - to request documents in a form other than that provided in this part
§ 1.84 - for accepting color drawings or photographs.
§ 1.91 - for entry of a model or exhibit.
§ 1.102(d) - to make an application special.
§ 1.138(c) - to expressly abandon an application to avoid publication.
§ 1.313 - to withdraw an application from issue.
§ 1.314 - to defer issuance of a patent.

/Zhigang Ma/
Signature

Zhigang Ma
Typed or printed name

2010-4-6
Registration No., if applicable

Adjustment date: 04/15/2010 LDIEP1
04/13/2010 DHEFSW 00006095 505142 12192084
01 FC:1467 130.00 CR
02 FC:1807 410.00 CR

This collection of information is required by 37 CFR 1.17. The information is required to obtain or retain a benefit by the public which is to file (and by the USPTO to process) an application. Confidentiality is governed by 35 U.S.C. 122 and 37 CFR 1.11 and 1.14. This collection is estimated to take 5 minutes to complete, including gathering, preparing, and submitting the completed application form to the USPTO. Time will vary depending upon the individual case. Any comments on the amount of time you require to complete this form and/or suggestions for reducing this burden, should be sent to the Chief Information Officer, U.S. Patent and Trademark Office, U.S. Department of Commerce, P.O. Box 1450, Alexandria, VA 22313-1450. DO NOT SEND FEES OR COMPLETED FORMS TO THIS ADDRESS. **SEND TO: Commissioner for Patents, P.O. Box 1450, Alexandria, VA 22313-1450.**

If you need assistance in completing the form, call 1-800-PTO-9199 and select option 2.

UNITED STATES PATENT AND TRADEMARK OFFICE

Commissioner for Patents
United States Patent and Trademark Office
P.O. Box 1450
Alexandria, VA 22313-1450
www.uspto.gov

MAILED

JUN 0 8 2010

OFFICE OF PETITIONS

BINGHAM MCHALE LLP
2700 MARKET TOWER
10 WEST MARKET STREET
INDIANAPOLIS IN 46204-4900

In re Application of	:	
Yadav et al.	:	
Application No. 12/192,097	:	DECISION ON PETITION
Filed: August 14, 2008	:	UNDER 37 CFR 1.78(a)(3)
Attorney Docket No. 11162-57452	:	

This is a decision on the petition under 37 CFR 1.78(a)(3), filed January 25, 2010 to accept an unintentionally delayed claim under 35 U.S.C. §§ 120 for the benefit of priority to prior-filed applications.

The petition is **DISMISSED**.

A petition for acceptance of a claim for late priority under 37 CFR 1.78(a)(3) is only applicable to those applications filed on or after November 29, 2000. Further, the petition is appropriate only after the expiration of the period specified in 37 CFR 1.78(a)(2)(ii). In addition, the petition under 37 CFR 1.78(a)(3) must be accompanied by:

(1) the reference required by 35 U.S.C. § 120 and 37 CFR 1.78(a)(2)(i) of the prior-filed application, unless previously submitted;
(2) the surcharge set forth in § 1.17(t); and
(3) a statement that the entire delay between the date the claim was due under 37 CFR 1.78(a)(2)(ii) and the date the claim was filed was unintentional. The Director may require additional information where there is a question whether the delay was unintentional.

The petition does not satisfy item(s) (1) and (3) above.

As to item (1), the application data sheet (ADS) provided shows that applicant has provided the incorrect filing dates for application no. 60/955,718 and application No. 10/798,646. Further, the ADS should include the application number for each benefit claim ex. 12/192,097 is a continuation in part of 11/428,728.

As to item (3), 37 CFR § 1.78(a)(3) requires a statement that the entire delay between the date the claim was due under 37 CFR § 1.78(a)(3)(iii) and the date the claim was filed was unintentional.

Before the petition under 37 CFR § 1.78(a)(3) can be granted, a renewed petition and either a signed supplemental Application Data Sheet or an amendment (complying with the provisions of 37 CFR 1.121 and 37 CFR 1.76(b)(5)) to correct the above matters and a proper statement of unintentional delay are required.

Further correspondence with respect to this matter should be addressed as follows:

By mail: Mail Stop PETITIONS
Commissioner for Patents
Post Office Box 1450
Alexandria, VA 22313-1450

By hand: Customer Service Window
Mail Stop Petitions
Randolph Building
401 Dulany Street
Alexandria, VA 22314

By fax: (571) 273-8300
ATTN: Office of Petitions

Telephone inquiries concerning this matter should be directed to Charlema Grant at (571) 272-3215.

Christopher Bottorff
Supervisor
Office of Petitions

UNITED STATES PATENT AND TRADEMARK OFFICE

Commissioner for Patents
United States Patent and Trademark Office
P.O. Box 1450
Alexandria, VA 22313-1450
www.uspto.gov

HUFFMAN LAW GROUP, P.C.
1900 MESA AVE.
COLORADO SPRINGS, CO. 80906

COPY MAILED

NOV 2 6 2008

OFFICE OF PETITIONS

In re Application of	:	
Peter B. Delahunt et al	:	
Application No. 12/192,245	:	DECISION ON PETITION
Filed: August 15, 2008	:	
Attorney Docket No. PS.0235	:	

This is a decision on the petition under 37 CFR 1.182, filed September 4, 2008, to change the order of the names of the inventors.

The petition is **DISMISSED**.

The petition states that the application data sheet (ADS) submitted with the instant petition shows the new order of the inventor names. However, the petition list inventor Dylan Bird as the second(2) inventor and the ADS list Dylan Bird as the third(3) inventor. Clarification is required.

As authorized, the $400 fee for the petition under 37 CFR 1.182 has been assessed to petitioner's deposit account.

Further correspondence with respect to this matter should be delivered through one of the following mediums:

By mail: Mail Stop PETITIONS
Commissioner for Patents
Post Office Box 1450
Alexandria, VA 22313-1450

By hand: Customer Service Window
Mail Stop Petitions
Randolph Building
401 Dulany Street
Alexandria, VA 22314

By fax: (571) 273-8300
ATTN: Office of Petitions

By internet: EFS-Web
www.uspto.gov/ebc/efs_help.html
(for help using EFS-Web call the
Patent Electronic Business Center
at (866) 217-9197)

Any questions concerning this matter may be directed to the undersigned at (571) 272-3208.

Karen Creasy

Karen Creasy
Petitions Examiner
Office of Petitions

UNITED STATES PATENT AND TRADEMARK OFFICE

Commissioner for Patents
United States Patent and Trademark Office
P.O. Box 1450
Alexandria, VA 22313-1450
www.uspto.gov

HUFFMAN LAW GROUP, P.C.
1900 MESA AVE.
COLORADO SPRINGS, CO. 80906

MAILED

JAN 30 2009

OFFICE OF PETITIONS

MAILED

JAN 30 2009

OFFICE OF PETITIONS

In re Application of
Peter B. Delahunt et al
Application No. 12/192,245
Filed: August 15, 2008

DECISION ON PETITION

This is a decision on the renewed petition under 37 CFR 1.182, filed December 30, 2008, to change the order of the names of the inventors.

The petition is **DISMISSED**.

The application data sheet (ADS) submitted with the instant petition is not properly signed. Note 37 CFR 1.4(d).

Further correspondence with respect to this matter should be delivered through one of the following mediums:

By mail: Mail Stop PETITIONS
Commissioner for Patents
Post Office Box 1450
Alexandria, VA 22313-1450

By hand: Customer Service Window
Mail Stop Petitions
Randolph Building
401 Dulany Street
Alexandria, VA 22314

By fax: (571) 273-8300
ATTN: Office of Petitions

By internet: EFS-Web
www.uspto.gov/ebc/efs_help.html
(for help using EFS-Web call the Patent Electronic Business Center at (866) 217-9197)

Any questions concerning this matter may be directed to the undersigned at (571) 272-3208.

Karen Creasy

Karen Creasy
Petitions Examiner
Office of Petitions

UNITED STATES PATENT AND TRADEMARK OFFICE

Commissioner for Patents
United States Patent and Trademark Office
P.O. Box 1450
Alexandria, VA 22313-1450
www.uspto.gov

MAILED

JAN 07 2009

TECHNOLOGY CENTER 2100

IBM - SPP
SHIMOKAJI & ASSOCIATES, P.C.
8911 Research Drive
Irvine CA 92618

In re Application of: Sukadev BHATTIPROLU et. al. Serial No.: 12/192,343 Filed: August 15, 2008 Docket: BEA920080032US1 Title: METHOD TO AUTOMATICALLY MERGE E-MAIL REPLIES	DECISION ON PETITION TO MAKE SPECIAL FOR NEW APPLICATION UNDER 37 C.F.R. § 1.102 & M.P.E.P. § 708.02

This is a decision on the petition filed on August 15, 2008 to make the above-identified application special for accelerated examination procedure under 37 C.F.R. § 1.102(d).

The petition to make the application special is **GRANTED**.

The application is eligible for accelerated examination and the petition complies with the conditions for granting the application special status pursuant to the "Change to Practice for Petitions in Patent Applications to Make Special and for Accelerated Examination" published June 26, 2006, in the Federal Register. (71 Fed. Reg. 36323).

The prosecution of the instant application will be conducted expeditiously according to the following guidelines.

1. The application will be docketed to an examiner and taken up for action within two weeks of the date of this decision.

2. Restriction Practice:
   If the examiner determines that the claims are not directed to a single invention, a telephone request to elect one single invention will be made pursuant to MPEP 812.01. As a prerequisite to the grant of this petition, the applicant has agreed to make an oral election, by telephone, without traverse. If the applicant refuses to make an election without traverse, or the examiner cannot reach the applicant after a reasonable effort, the examiner will treat the first claimed invention (invention defined by claim 1) as having being constructively elected without traverse for examination.

3. Office action:

If it is determined that, after appropriate consultation, there is a potential rejection or any other issue to be addressed, the examiner will telephone the applicant and arrange an interview to discuss and resolve the issue. An Office action, other than a Notice of Allowance and Fee(s) Due (Notice of Allowance), will not be issued unless either: 1) an interview was conducted but did not result in agreed to action that places the application in condition for allowance, or, 2) a determination is made that an interview would be unlikely to result in the application being placed in condition for allowance, and 3) an internal conference has been held to review any rejection of any claim.

4. Time for Reply:
An Office action other than a Notice of Allowance or a final Office action will set a shortened statutory period of one month or thirty days, whichever is longer, for reply with no extension of time available under 37 CFR 1.136(a). Failure to timely file a reply within this non-extendible period for reply will result in the abandonment of the application.

5. Reply by Applicant:
A timely reply to an Office action other than the Notice of Allowance must be submitted electronically via EFS or EFS-web and limited to addressing the rejections, objections and requirement made. Any amendment that attempts to: 1) add claims which would result in more than three pending independent claims or more than twenty pending total claims; 2) present claims not encompassed by the pre-examination search or an updated accelerated examination support document; or 3) present claims that are directed a non-elected invention or an invention other than that previously claimed and examined in the application, will be treated as not fully responsive and will not be entered.

For any amendment to the claims (including any new claim) that is not encompassed by the accelerated examination support document, applicant must provide an updated accelerated examination support document that encompasses the amended or new claims at the time of filing of the amendment.

To proceed expeditiously with the examination, it is recommended that a reply with amendments made to any claim or with any new claim being added be accompanied by an updated accelerated examination support document or a statement explaining how the amended or new claim is supported by the original accelerated examination support document.

6. Information Disclosure Statement (IDS):
Any IDS filed during prosecution must be submitted electronically via EFS or EFS-web, accompanied by an updated accelerated examination support document, and be in compliance with 37 CFR 1.97 and 1.98.

7. Post-Allowance Processing:
To expedite processing of the allowed application into a patent, the applicant must: 1) pay the required fees within one month of the date of the Notice of Allowance, and 2) not file any post allowance papers not required by the Office.

In no event may the issue fee be paid and accepted later than three months from the date of the Notice of Allowance.

8. After-Final and Appeal Procedures:
   To expedite prosecution, after receiving the final Office action, applicant must: 1) promptly file a notice of appeal, an appeal brief and appeal fees; and 2) not request a pre-appeal brief conference.

   Any amendment, affidavit or other evidence filed after final Office action must comply with applicable rules and the requirements outlined in numbered paragraphs 5 and 6 above.

   On appeal, the application will proceed according to normal appeal procedures. After appeal, the application will again be treated special.

9. Proceedings Outside the Normal Examination Process:
   If the application becomes involved in a proceeding that is outside the normal examination process (e.g., a secrecy order, national security review, interference proceeding, petitions under 37 CFR 1.181, 182 or 183), the application will be treated special before and after such proceeding.

10. Final Disposition:
    The twelve-month goal of this accelerated examination procedure ends with a final disposition. The mailing of a final Office action, a Notice of Allowance, the filing of a Notice of Appeal, or the filing of a Request for Continued Examination (RCE) is the final disposition.

If, during prosecution, a paper is not filed electronically using EFS-web, a reply is filed but is not fully responsive, the application is involved in an appeal, or a proceeding outside normal examination process, the application will still be examined expeditiously, however, the final disposition may occur more than twelve months from the filing of the application. In addition, Applicant is reminded that due to the dismissal of the previous petition submission, examination may not be completed within twelve months of the filing date of the application.

Any inquiry regarding this decision should be directed the undersigned whose telephone number is (571) 272-4147.

/bp/

Kim Huynh,
Quality Assurance Specialist
Technology Center 2400,
Network, Multiplexing, Cable, and Security

UNITED STATES PATENT AND TRADEMARK OFFICE

UNITED STATES DEPARTMENT OF COMMERCE
United States Patent and Trademark Office
Address: COMMISSIONER FOR PATENTS
P.O. Box 1450
Alexandria, Virginia 22313-1450
www.uspto.gov

APPLICATION NO.	FILING DATE	FIRST NAMED INVENTOR	ATTORNEY DOCKET NO.	CONFIRMATION NO.
12/192,343	08/15/2008	Sukadev Bhattiprolu	BEA920080032US1	2559

79452 7590 01/08/2009
IBM - SPP
SHIMOKAJI & ASSOCIATES, P.C.
8911 Research Drive
Irvine, CA 92618

EXAMINER
CALDWELL, ANDREW T

ART UNIT	PAPER NUMBER
2442	

NOTIFICATION DATE	DELIVERY MODE
01/08/2009	ELECTRONIC

Please find below and/or attached an Office communication concerning this application or proceeding.

The time period for reply, if any, is set in the attached communication.

Notice of the Office communication was sent electronically on above-indicated "Notification Date" to the following e-mail address(es):

patents@shimokaji.com

UNITED STATES PATENT AND TRADEMARK OFFICE

Commissioner for Patents
United States Patent and Trademark Office
P.O. Box 1450
Alexandria, VA 22313-1450
www.uspto.gov

JONES DAY
222 EAST 41ST ST
NEW YORK NY 10017

COPY MAILED
DEC 0 8 2008

In re Application of

TARIN, Stephan A.
Application No. 12/192,434
Filed: August 15, 2008
Attorney Docket No. **008676-0044-999**

DECISION ON PETITION
TO WITHDRAW
FROM RECORD

This is a decision on the Request to Withdraw as attorney or agent of record under 37 C.F.R. § 1.36(b), filed November 13, 2008.

The request is **APPROVED**.

A grantable request to withdraw as attorney/agent of record must be signed by every attorney/agent seeking to withdraw or contain a clear indication that one attorney is signing on behalf of another/others. The Office requires the practitioner(s) requesting withdrawal to certify that he, she, or they have: (1) given reasonable notice to the client, prior to the expiration of the response period, that the practitioner(s) intends to withdraw from employment; (2) delivered to the client or a duly authorized representative of the client all papers and property (including funds) to which the client is entitled; and (3) notified the client of any responses that may be due and the time frame within which the client must respond, pursuant 37 CFR 10.40(c).

The request was signed by Thomas Friebel on behalf of all attorneys of record who are associated with customer No. 20583. All attorneys/agents associated with the Customer Number 20583 have been withdrawn. Applicant is reminded that there is no attorney of record at this time.

The request to change the correspondence address of record is not acceptable as the requested correspondence address is not that of: (1) the first named signing inventor; or (2) an intervening assignee of the entire interest under 37 C.F.R 3.71. All future communications from the Office will be directed to the first named signing inventor or the assignee of the entire interest at the first copied address below until otherwise properly notified by the applicant.

Telephone inquiries concerning this decision should be directed to Tredelle Jackson at 571-272-2783.

Tredelle D. Jackson
Paralegal Specialist
Office of Petitions

cc: **STEPHEN A. TARIN**
20 EAST 74TH STREET, STE. 6G
NEW YORK NY 10021

UNITED STATES PATENT AND TRADEMARK OFFICE

Commissioner for Patents
United States Patent and Trademark Office
P.O. Box 1450
Alexandria, VA 22313-1450
www.uspto.gov

COPY MAILED

MAY 07 2009

OFFICE OF PETITIONS

BRINKS, HOFER, GILSON & LIONE
P.O. BOX 1340
MORRISVILLE NC 27560

In re Application of
Paige, Mitchell, Evans, and Harvan
Application No. 12/192,469
Filed: August 15, 2008
Attorney Docket No. 13778-33
For: BIOMARKERS FOR ALZHEIMER'S DISEASE AND METHODS USING THE SAME

: DECISION REFUSING STATUS
: UNDER 37 CFR 1.47(a)

This is a decision on the petition under 37 CFR 1.47(a) filed April 7, 2009.

The petition under 37 CFR 1.47(a) is **dismissed.**

Any request for reconsideration under this decision must be submitted within TWO (2) MONTHS from the mail date of this decision. Extensions of time under 37 CFR 1.136(a) are permitted. Failure to respond will result in the abandonment of this application. Any response should be titled "Request for Reconsideration of Petition Under 37 CFR 1.47(a).

The above-identified application was filed on August 15, 2008, and was not accompanied by a properly executed oath or declaration. A Notice to File Missing Parts of Nonprovisional Application was mailed on September 8, 2008, requiring a proper oath or declaration and allowing an extendable period for reply of two months from its mailing date. The instant petition was filed on April 7, 2009 with a request for an extension of time within the fifth month.

A grantable petition under 37 CFR 1.47(a) requires:

(1) proof that the non-signing inventor(s) cannot be reached or refuses to sign the oath or declaration after having been presented with the application papers (specification, claims, and drawings);

(2) an acceptable oath or declaration in compliance with 35 U.S.C. §§ 115 and 116;

(3) the petition fee,

(4) a statement of the last known address of the non-signing inventor,

The instant petition lacks item (2) as set forth above.

As to item (2), the declaration filed April 7, 2009, contains and uninitiated and undated cross-out in inventor Harvan's signature block. The renewed petition must be accompanied by a declaration wherein the signature block for inventor Harvan is corrected.

Further correspondence with respect to this matter should be addressed as follows:

By mail: Mail Stop Petitions
Commissioner for Patents,
PO Box 1450
Alexandria, VA 22313-1450

By FAX: (571) 273-8300
Attn: Office of Petitions

Telephone inquiries concerning this decision should be directed to the undersigned (571) 272-3222.

Kenya A. McLaughlin
Petitions Attorney
Office of Petitions

UNITED STATES PATENT AND TRADEMARK OFFICE

Commissioner for Patents
United States Patent and Trademark Office
P.O. Box 1450
Alexandria, VA 22313-1450
www.uspto.gov

BRINKS, HOFER, GILSON & LIONE
P.O. BOX 1340
MORRISVILLE NC 27560

MAILED

AUG 3 1 2009

OFFICE OF PETITIONS

In re Application of
Paige, Mitchell, Evans, and Harvan
Application No. 12/192,469
Filed: August 15, 2008
Attorney Docket No. 13778-33
For: BIOMARKERS FOR ALZHEIMER'S DISEASE AND METHODS USING THE SAME

: DECISION ACCORDING STATUS
: UNDER 37 CFR 1.47(a)

This is in response to the renewed petition under 37 CFR 1.47(a), filed June 1, 2009.

The petition is **GRANTED**.

The above-identified application and papers have been reviewed and found in compliance with 37 CFR 1.47(a). This application is hereby accorded Rule 1.47(a) status.

The above-identified application was filed on August 15, 2008, and was not accompanied by a properly executed oath or declaration. A Notice to File Missing Parts of Nonprovisional Application was mailed on September 8, 2008, requiring a proper oath or declaration and allowing an extendable period for reply of two months from its mailing date. A petition under 37 CFR 1.47(a)was filed on June 1, 2009 with a request for an extension of time within the fifth month. The petition was dismissed by a decision mailed May 7, 2009.

Petitioner has shown that inventor Paige has refused to join the prosecution of the application. The above-identified application and papers have been reviewed and found in compliance with 37 CFR 1.47(a). This application is hereby accorded Rule 1.47(a) status.

As provided in Rule 1.47(c), this Office will forward notice of this application's filing to the non-signing inventor at the address given in the petition. Notice of the filing of this application will also be published in the Official Gazette.

This application will be forwarded to the Office of Patent Application Processing for further processing.

Telephone inquiries concerning this decision should be directed to the undersigned at (571) 272-3222.

Kenya A. McLaughlin
Petitions Attorney
Office of Petitions

UNITED STATES PATENT AND TRADEMARK OFFICE

Commissioner for Patents
United States Patent and Trademark Office
P.O. Box 1450
Alexandria, VA 22313-1450
www.uspto.gov

HAYWORTH, CHANEY & THOMAS, P.A.
202 N. HARBOR CITY BLVD.
SUITE 300
MELBOURNE FL 32935

COPY MAILED

MAR 0 2 2009

OFFICE OF PETITIONS

In re Application of

MAXIK, Fredric S. et al.
Application No. 12/192,470
Filed: August 15, 2008
Attorney Docket No. **08-4226**

DECISION ON PETITION
TO WITHDRAW
FROM RECORD

This is a decision on the Request to Withdraw as attorney or agent of record under 37 C.F.R. § 1.36(b), filed February 05, 2009.

The request is **APPROVED**.

A grantable request to withdraw as attorney/agent of record must be signed by every attorney/agent seeking to withdraw or contain a clear indication that one attorney is signing on behalf of another/others. The Office requires the practitioner(s) requesting withdrawal to certify that he, she, or they have: (1) given reasonable notice to the client, prior to the expiration of the response period, that the practitioner(s) intends to withdraw from employment; (2) delivered to the client or a duly authorized representative of the client all papers and property (including funds) to which the client is entitled; and (3) notified the client of any responses that may be due and the time frame within which the client must respond, pursuant 37 CFR 10.40(c).

The request was signed by Robert A. Lynch on behalf of all attorneys of record who are associated with customer No. 67989. All attorneys/agents associated have been withdrawn. Applicant is reminded that there is no attorney of record at this time.

All future correspondence will be directed to the first named inventor Fredric S. Maxik at the address indicated below.

There are no outstanding office actions at this time.

Telephone inquiries concerning this decision should be directed to Michelle R. Eason at 571-272-4231.

Michelle R. Eason
Paralegal Specialist
Office of Petitions

cc: **FREDRIC MAXIK**
462 SANDERLING DR.
INDIALANTIC, FL 32903

UNITED STATES PATENT AND TRADEMARK OFFICE

Commissioner for Patents
United States Patent and Trademark Office
P.O. Box 1450
Alexandria, VA 22313-1450
www.uspto.gov

HAYWORTH, CHANEY & THOMAS, PA
202 N. HARBOR CITY BLVD.
SUITE 300
MELBOURNE, FL 32935

MAILED

MAR 13 2009

OFFICE OF PETITIONS

In re Application of	:	
Fredric S. Maxik	:	
Application No. 12/192,506	:	DECISION ON PETITION
Filed: August 15, 2008	:	TO WITHDRAW
Attorney Docket No. 08-4228	:	FROM RECORD
	:	

This is a decision on the Request to Withdraw as attorney or agent of record under 37 C.F.R. § 1.36(b), filed February 5, 2009.

The request is **APPROVED**.

A grantable request to withdraw as attorney/agent of record must be signed, by every attorney/agent seeking to withdraw or contain a clear indication that one attorney is signing on behalf of another/others

The request was signed by Robert A Lynch on behalf of all attorneys of record who are associated with customer No. 67989. All attorneys/agents associated with the Customer Number 67989 have been withdrawn. Applicant is reminded that there is no attorney of record at this time.

The correspondence address of record has been changed and the new correspondence address is the address indicated below.

There are no pending Office actions at the present time.

Telephone inquiries concerning this decision should be directed to undersigned at 571-272-1642.

/AMW/
April M. Wise
Petitions Examiner
Office of Petitions

cc: FREDRIC S. MAXIK
462 SANDERLING DRIVE
INDIALANTIC, FL 32903

UNITED STATES PATENT AND TRADEMARK OFFICE

Commissioner for Patents
United States Patent and Trademark Office
P.O. Box 1450
Alexandria, VA 22313-1450
www.uspto.gov

THOMAS, KAYDEN, HORSTEMEYER & RISLEY, LLP
600 GALLERIA PARKWAY, S.E.
STE 1500
ATLANTA GA 30339-5994

SEP 10 2008

In re Application of: TON, QUY THAT Application No.: 12/192,521 Filed: August 15, 2008 Title: DISPOSABLE LINER FOR A BASIN	:	DECISION ON PETITION TO MAKE SPECIAL FOR NEW APPLICATION UNDER 37 C.F.R. § 1.102 & M.P.E.P. § 708.02

This is a decision on the petition filed on August 15, 2008 to make the above-identified application special for accelerated examination procedure under 37 C.F.R. § 1.102(d).

The petition to make the application special is **DISMISSED**.

REGULATION AND PRACTICE

A grantable petition to make special under 37 C.F.R. § 1.102(d) and pursuant to the "Change to Practice for Petitions in Patent Applications to Make Special and for Accelerated Examination" published in the Federal Register on June 26, 2006 (71 Fed. Reg. 36323), must satisfy the following conditions:

I. Conditions Regarding the Application:

1. the application must be a non-reissue utility or design application filed under 37 CFR 1.111(a);
2. the application, the petition and the required fees must be filed electronically using the USPTO's electronic filing system (EFS), or EFS-web; if not filed electronically, a statement asserting that EFS and EFS-web were not available during the normal business hours.
3. at the time of filing, the application must be complete under 37 CFR 1.51 and in condition for examination;
4. the application must contain three or fewer independent claims and twenty or fewer total claims and the claims must be directed to a single invention.

II. Conditions Regarding the Petition:

The petition must:

1. be filed with the application;
2. include a statement that applicant agrees not to separately argue the patentability of any independent claim during any appeal in the application;
3. include a statement that applicant agrees to make an election without traverse in a telephone interview.

4. include a statement that applicant agrees to conduct such an interview when requested by the examiner.

5. include a statement, made based on a good faith belief, that a preexamination search in compliance with the following requirements, was conducted, including an identification of the field of search by United States class and subclass, where applicable, and for database searches, the search logic or chemical structure or sequence used as a query, the name of the file(s) searched and the database service, and the date of the search.

The preexamination search must:

5.1 involve U.S. patents and patent application publications, foreign patent documents, and non-patent literature, unless the applicant can justify with reasonable certainty that no references more pertinent than those already identified are likely to be found in the eliminated sources and includes such a justification with this statement;

5.2. be directed to the claimed invention and encompass all of the features of the claims, giving the claims the broadest reasonable interpretation;

5.3. encompass the disclosed features that may be claimed.

6. must provide in support of the petition an accelerated examination support document. An accelerated examination support document must include:

6.1. an information disclosure statement (IDS) in compliance with 37 CFR 1.98 citing each reference deemed most closely related to the subject matter of each of the claims;

6.2. an identification of all the limitations in the claims that are disclosed by the reference specifying where the limitation is disclosed in the cited reference;

6.3. a detailed explanation of how each of the claims are patentable over the references cited with particularity required by 37 CFR 1.111(b) and (c);

6.4. a concise statement of the utility of the invention as defined in each of the independent claims (unless the application is a design application);

6.5. a showing of where each limitation of the claims finds support under 35 U.S.C. 112, first paragraph, in the written description of the specification. If applicable, the showing must also identify: (1) each means- (or step) plus-function claim element that invokes consideration under 35 U.S.C. 112, sixth paragraph; and (2) the structure, material, or acts in the specification that corresponds to each means- (or step) plus-function claim element that invokes consideration under 35 U.S.C. 112, sixth paragraph; if the application claims the benefit of one or more applications under title 35, United States Code, the showing must also include where each limitation of the claims finds support under 35 U.S.C. 112, first paragraph, in each such application in which such supports exists;

6.6. an identification of any cited references that may be disqualified under 35 U.S.C. 103(c).

REVIEW OF FACTS

The conditions I: 1-4, II: 1-5, 5.1, 5.3, 6, 6.1, and 6.6 above are considered to have been met. However, the petition fails to comply with conditions II: 5.2, 6.2, 6.3, 6.4 and 6.5 above. Therefore, the petition fails to meet the required conditions to be accorded special status under the accelerated examination procedure.

Discussion

When referring to "the petition" herein below, the received papers under consideration include the four page PTO/SB/28 form "Petition to Make Special Under Accelerated Examination Program", the "pre-examination search document" (PESD) including pages 1-16; the "accelerated examination support document" (AESD) comprising pages 1-15, and an Information Disclosure Statement (IDS).

Regarding the requirements of section II element 5.2 outlined above, it appears the search outlined in the petition omitted a critical search area by not searching in class 4 subclasses 655 and DIG 18. The search should be expanded to include all the claimed limitations, in particular those that are identified as defining over the prior art. For example, it is noted that none of the references cited and discussed in the AESD includes basins with drainage holes and respective plugs for said drainage holes – a feature conventionally used in basins at the time of the claimed invention.

Regarding the requirements of section II element 6.2 outlined above, the petition fails to identify all of the limitations in the application claims that are disclosed in each of the reference(s) and where the limitation is disclosed in each of the cited reference. As stated in the policy published in the Federal Register on June 26, 2006 (71 Fed. Reg. 36323), for each reference cited, the examination support document must include an identification of all the limitations in the claims that are disclosed by the reference specifying where the limitation is disclosed in the cited reference. The policy statement does not caveat "the independent claims", nor does it allow for grouping and general discussions. A grantable petition must delineate every limitation of every claim and identify where the equivalent limitation is disclosed in each piece of prior art cited on the IDS. As is published on www.uspto.gov/web/patents/accelerated/ in "Guidelines for Applicants under the new accelerated examination procedures"):

> *For each reference cited, the accelerated examination support document must include an identification of all the limitations in the claims that are disclosed by the reference specifying where the limitation is disclosed in the cited reference. Applicants should specify where in each of the cited references the particular claim limitations are found. This process is intended to be analogous to the analysis an examiner uses when locating a relevant prior art reference and then determining whether the reference contains the claimed limitation. For each claimed limitation, the examiner would consider the disclosure of the reference and all reasonable portions in the reference where the limitation is shown. When preparing an Office Action, the examiner would correlate the limitation to the portion of reference which best characterizes the limitation. This part of the AESD is not intended to be an exhaustive listing of every conceivable subjective interpretation of how a claim limitation may read on the reference. Applicants should point out what are considered to be the relevant representations of the limitation in the reference. A limitation may be found in more than one portion of the reference and should be pointed out, yet the intention is not to have applicants point out every conceivable interpretation. The USPTO will adopt a rule of reason when evaluating this portion of the AESD. Unless the representation is so deficient that it would materially effect examination of the application (e.g., numerous instances where the limitations are*

not shown where applicant states they are), the representation will be deemed to be sufficient for this part of the AESD.

Petitioner's submission is not specific enough. Petitioner points out some limitations of some of the claims and provides direction to areas of the prior art where the corresponding limitation may be found. Petitioner does not address each discrete limitation (i.e., each single limitation, NOT multiple limitations bundled together) and state where it is (or state that it is not) found in each one of the most closely related prior art. The requirement of section II element 6.2 can be satisfied by listing verbatim ("copy and paste") all the presently filed claims (i.e., the claims of the instant application) and by indicating where each discrete limitation (without bundling limitations together to the extent possible) of each one of said presently filed claims is taught (or is not taught) in each one of the cited most closely related references, by specifically indicating the element number and/or the relevant page/paragraph and line number(s), or by indicating "(not disclosed)" where appropriate - in order to ensure that no limitation was left out inadvertently. Claim recitations must be complete. Statements such as "Limitation II(b) – (not disclosed)", i.e., recitations that do not spell out the relevant limitations should be avoided. This one-to-one mapping should be performed individually, with regard to each one of the most closely related prior art that has been cited, one reference at a time. Applicant's attention is drawn to the fact that the requirement of this element calls for a straight mapping of each single limitation unto the prior art. Section II element 6.2 is not the place to make patentability arguments by bundling together multiple limitations and concluding that the combination is not disclosed. Patentability arguments should be made only in response to the requirement of section II element 6.3.

It is noted that Petitioner has not addressed in the AESD all the references cited in the IDS. Applicant's attention is drawn to the following answer to "Frequently Asked Questions" posted on the USPTO website:

IDS 3. *Will the Office accept an accelerated examination support document (AESD) that contains a list of references in the information disclosure statement (IDS) of the AESD, but does not include any identification and explanation for those references that are not required to be submitted in the IDS of the AESD (i.e., references that are not most closely related to the subject matter of each of the claims)?*

No, the AESD will be deemed insufficient for lack of identification and explanation. The applicant will be notified of the defects and the application will remain in the status of a new application awaiting action in its regular turn. The applicant will be given a time period of one month, without any extension of time under 37 CFR §1.136(a), to perfect the petition. If applicant wishes to cite references that are not required in an AESD for the examiner to consider, applicant may submit such references in a separate IDS in compliance with 37 CFR §1.97 and §1.98. Applicant should clearly identify the IDS of the AESD that is in support of the petition to make special and, similarly, applicant should clearly identify the separate IDS that is not in support of the petition. Consistent with 37 CFR §10.18, any reference submitted in a separate IDS that is not part of an AESD will be treated as a representation by applicant to the USPTO that no reference submitted in the separate IDS is deemed closer to the subject matter of at least one claim than the references provided in the AESD.

With respect to the requirements of section II element 6.3 outlined above, the petition fails to provide a detailed explanation of how each one of the claims is patentable over (each of) the reference(s) with particularity required by 37 CFR 1.111(b) and (c). Petitioners should be specific in their explanation and include the identification of specific claim limitations that support their position, where appropriate. Petitioners must distinguish each claim from each piece of prior art cited. General statements that the claims are neither anticipated nor rendered obvious by the cited references or that the references are not properly combinable will not be acceptable. The Office cannot infer or guess what petitioner believes the differences between the claims and the teachings of the prior art to be. Petitioner's statements must also be consistent and must be related to the claim language. In the instant petition, Petitioner bundled together limitations, thus failing to address the patentability requirement with the particularity required above. In particular, it is noted that basins with drainage holes and respective plugs for said drainage holes were conventionally used in the art at the time of the claimed invention, however Petitioner did not supply an analysis under 35 U.S.C. 103(a) as to why such a combination would not be obvious. For these reasons, the petition does not meet the requirement of section II, element 6.3. The requirement of section II element 6.3 can be satisfied by indicating for each one of the presently filed claims (i.e., the claims of the instant application) which specific i.e., discrete limitation(s) in each one of said presently filed claims define(s) over each one of the most closely related references that has been cited. A lack of obviousness analysis under 35 U.S.C. 103(a) must be included. With regard to each dependent claim, there should be an unequivocal statement whether the patentability of each dependent claim is predicated solely on that of the claim from which it depends (e.g., "Dependent claim X is patentable solely because of the limitations of the claims from which it depends" - will suffice), or Applicant should provide a detailed explanation of patentability specific to that particular claim (only if the claim recites new limitations that further define over the prior art). This patentability showing should be performed individually, with regard to each one of the most closely related prior art that has been cited, one reference at a time. Patentability arguments must specifically spell out the relevant limitation(s); prior art patents can be referred to by the last name of the first inventor. Statements such as "Reference A does not teach limitation II(b)" should be avoided.

Regarding the requirements of section II element 6.4 outlined above, the petition fails to identify a concise statement of the utility of the invention as defined in each of the independent claims. A general statement directed to the overall concept of the invention is not specifically relating the utility to each of the independent claims as is required by the policy. Petitioner should reference each independent claim specifically when discussing the utility of the invention.

Regarding the requirements of section II element 6.5 outlined above, the requirements of this section are not met because lack of specificity. A grantable petition requires petitioner to provide a showing of where each limitation of the claims finds support under 35 U.S.C. 112, first paragraph, in the written description of the specification. The instant petition only identifies figures and portions of text with respect to claim numbers as opposed to the disclosure of the required claim limitations, addressed individually for each limitation in each claim. The requirement of section II element 6.5 can be satisfied by listing verbatim all the presently filed

claims (by "copy and paste") and by indicating where the instant application (and separately each one of the priority documents) teaches each discrete limitation (without bundling limitations together to the extent possible) in each one of said presently filed claims, by indicating the element number and/or the relevant page and line numbers. Applicant's attention is also drawn to the requirements relevant under 35 U.S.C 112, 6th paragraph, listed above. Should this requirement not apply to the present application, Applicant should make a statement in this regard (requirement presently satisfied). The statement on p. 14 of the AESD that the present application does not claim benefit of any application is believed to in error, in view of the statements made in the Application Data Sheet.

DECISION

For the above-stated reasons, the petition is **dismissed**. The application will therefore be taken up by the examiner for action in its regular turn.

Petitioner is given a single opportunity to perfect the petition. Any request for reconsideration of this decision must be submitted within 1 (one) month or 30 (thirty) days, whichever is longer, (no extension of time under 37 CFR 1.136(a)) from the date of this decision in order to be considered timely. Any request for reconsideration must address all of the deficiencies indicated above.

Petitioner is reminded that, upon granting of the special status of the application on request for reconsideration, the application will be processed expeditiously. However, due to the dismissal of the instant petition, examination may not be completed within twelve months of the filing date of the application.

Any inquiry regarding this decision should be directed to Ehud Gartenberg, TC 3700 Special Programs Examiner, at (571) 272-4828. In his absence, an inquiry can be directed to J. Harrison, Special Program Examiner, at 571 272-4449.

Ehud Gartenberg

Ehud Gartenberg
Special Programs Examiner
Technology Center 3700

UNITED STATES PATENT AND TRADEMARK OFFICE

Commissioner for Patents
United States Patent and Trademark Office
P.O. Box 1450
Alexandria, VA 22313-1450
www.uspto.gov

THOMAS, KAYDEN, HORSTEMEYER & RISLEY, LLP
600 GALLERIA PARKWAY, S.E.
STE 1500
ATLANTA GA 30339-5994

OCT 29 2008

In re Application of: TON, QUY THAT Serial No.: 12/192,521 Filed: August 15, 2008 Title: DISPOSABLE LINER FOR A BASIN	:	DECISION ON PETITION TO MAKE SPECIAL FOR NEW APPLICATION UNDER 37 C.F.R. § 1.102 & M.P.E.P. § 708.02

This is a decision on the request for reconsideration filed on October 10, 2008 to make the above-identified application special for accelerated examination procedure under 37 C.F.R. § 1.102(d). The request has been treated as a renewed petition to make the above-identified application special and has been viewed as a supplement to and in combination with the original petition which was filed on August 15, 2008 and dismissed in the Office letter of September 10, 2008.

The petition to make the application special is **DENIED.**

REGULATION AND PRACTICE

A grantable petition to make special under 37 C.F.R. § 1.102(d) and pursuant to the "Change to Practice for Petitions in Patent Applications to Make Special and for Accelerated Examination" published in the Federal Register on June 26, 2006 (71 Fed. Reg. 36323), must satisfy the conditions as outlined in the prior petition decision. The conditions are not repeated herein.

REVIEW OF FACTS

As stated in the decision of September 10, 2008 conditions I: 1-4, II: 1-5, 5.1 5.3, 6, 6.1 and 6.6 were considered to have been met. However, the petition failed to comply with conditions II: 5.2, 6.2, 6.3, 6.4, and 6.5. Upon reconsideration, the petition is not considered to have met any of the requirements found previously deficient. Therefore, the petition fails to meet the required conditions to be accorded special status under the accelerated examination procedure.

DISCUSSION

Regarding the requirement of condition II: 5.2, Petitioner failed to identify in class/subclass 004/622 the reference Luong US 2005/0204466. The relevance of Luong will be discussed in the following sections. Petitioner stated in the Pre-examination Search Document (PESD) having had searched said class/subclass.

Applicant failed to comply with the requirement of condition II: 6.2 because lack of specificity and because lack of references that are most closely related to the claimed invention. For example, with respect to claims 1 and 2, and Zolotnik US 2003/0005515, Petitioner states on p. 20 of the Accelerated Examination Support Document (AESD):

D. **Zolotnik, et al. (US 2003/0005515)**

With respect to the claims, Zolotnik ("'515 publication") can be applied to the following claim elements:

1. A disposable liner that is disposed in a cavity of a basin (abstract, lines 1-6) comprising:

sidewalls that are designed to adapt to the contours of the cavity of the basin (paragraph [0012]);

footrests that are attached in a normal position to the respective sidewalls (not disclosed in the '515 publication); and

a trench that is formed between the footrests (not disclosed in the '515 publication).

2. The disposable liner as defined in claim 1, wherein the bottom wall of the trench includes a drainage hole (not disclosed in the '515 publication).

It is first noticed that the proposed mapping lacks specificity in that limitations are bundled, and discrete element numbers accompanied by paragraph and line numbers are missing. Setting this aside however, Petitioner recognizes that Zolotnik's liner has "sidewalls that are designed to adapt to the contour of the basin", but the claimed trench and drainage are stated not to be disclosed. It is first noticed that Zolotnik does teach in paragraph [0007] l. 9 *et seq.*, a disposable liner having a drainage hole

> Usually, the bathtub liners have a drain, even if they are disposable. This is because of the special problem that a bathtub holds too much water to be lifted by a normal person. The liner must have a drain or be bailed out after the bath.

This fact is also acknowledged by Petitioner himself elsewhere, see p. 24 of the AESD. Regarding the claimed "sidewalls that are designed to adapt to the contour of the basin", Zolotnik teaches in paragraph [0012] ll. 1-3, that

> **[0012]** The outside of the basin is shaped so that it closely conforms to the shape of a reservoir (4) of a common commercial salon washbasin (5). The basin fits down into the reservoir and is then filled with the soaking solution. In

First a clarification of terms: the presently claimed disposable liner and basin correspond to Zolotnik's liner or disposable basin (used interchangeably), and reservoir respectively. Now, Luong should have been identified as most closely related prior art for section II: 6.2, because he provides structural teachings to obviously modify Zolotnik's disposable basin or liner - to "closely conform" to Luong's basin, and consequently form the claimed "trench" conforming to Luong's lower zone 20 between footrests 17 and 17'. Regarding claim 2, Zolotnik's "bottom wall" would obviously be modified to include "a drainage hole" connecting to Luong's drain 13, as shown in Fig. 1, and reproduced below:

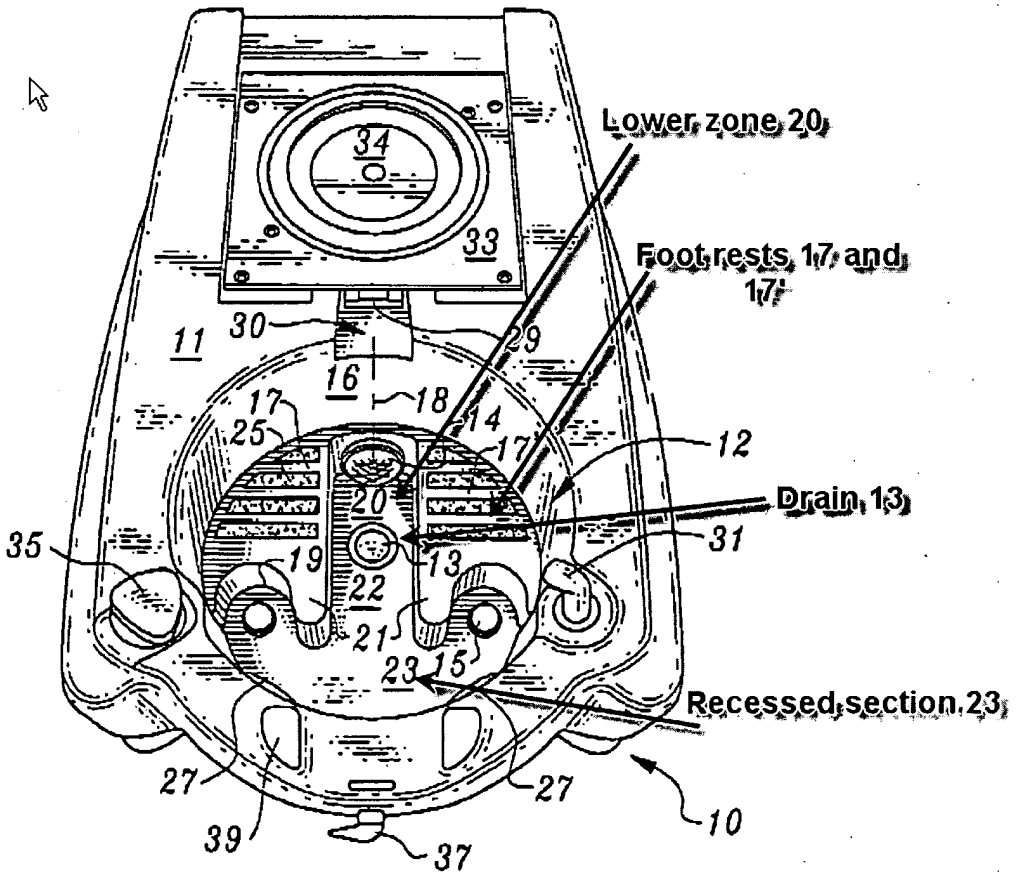

Luong, Fig. 1

Therefore, for at least all the reasons stated above, i.e., lack of specificity, bundling limitations, ignoring specific teachings, and failure to identify most closely related prior art, Petitioner failed to satisfy the requirements of condition II: 6.2.

The requirement of section II element 6.2 can be satisfied by listing verbatim ("copy and paste") all the presently filed claims (i.e., the claims of the instant application) and by indicating where each discrete limitation (without bundling limitations to the extent possible) of each one of said presently filed claims is taught (or is not taught) in each one of the most closely related references that is cited, by specifically indicating the element number and/or the relevant page/paragraph and line number(s), or by indicating "(not disclosed)" where appropriate - in order to ensure that no limitation was left out inadvertently. Note that disclosure may be express, implicit, or inherent. Claim recitations must be complete. Statements such as "Limitation II(b) – (not disclosed)", i.e., statements that do not spell out the relevant limitations should be avoided. This one-to-one mapping should be performed individually, with regard to each one of the most closely related prior art that is cited, one reference at a time. Applicant's attention is drawn to the fact that the requirement of this element calls for a straight mapping of each single limitation unto the prior art. Section II element 6.2 is not the proper venue to imply patentability by bundling limitations and concluding that the combination is not disclosed. Patentability arguments should be made only in response to the requirement of section II element 6.3.

Petitioner failed to satisfy the requirements of section II: 6.3, for at least erring in determining that Zolotnik does not anticipate the claimed "drainage hole" in spite of the fact that he does not use it. More relevant though is Petitioner's failure to identify Luang as "most closely related prior art" and argue (against) the obviousness of combining Luong and Zolotnik in view of Zolotnik's teaching on paragraph [0012] and as explained above. In addition, patentability arguments for claims 11 and 15 could not be found. The requirement of section II element 6.3 can be satisfied by indicating for each one of the presently filed claims (i.e., the claims of the instant application) which specific i.e., discrete limitation(s) in each one of said presently filed claims define(s) over each one of the most closely related references that is cited. With regard to each dependent claim, there should be an unequivocal statement whether the patentability of each dependent claim is predicated solely on that of the claim from which it depends (e.g., "Dependent claim X is patentable solely because of the limitations of the claims from which it depends" - will suffice), or Applicant should provide a detailed explanation of patentability specific to that particular claim (only if the claim recites new limitations that further define over the prior art). This patentability showing should be performed individually, with regard to each one of the most closely related prior art that is cited, one reference at a time. Patentability arguments must specifically spell out the relevant limitation(s); prior art patents can be referred to by the last name of the first inventor. Statements such as "Reference A does not teach limitation II(b)" must be avoided. Obviousness, or lack thereof, analysis for combining two or more references should be performed when a "most closely related prior art" reference clearly indicates reasons for such combination.

Regarding the requirements of section II element 6.4 outlined above, the petition fails to identify a concise statement of the utility of the invention as separately defined in each one of the independent claims. A general statement directed to the overall concept of the invention is not

specifically relating the utility to each of the independent claims as is required by the policy. Petitioner should reference separately each one of the independent claims specifically when discussing the utility of the invention. The statement on p. 28 of the AESD reproduced below stating the utility of claim 1 is clearly too general (i.e., liner for what, contamination of what, in what context?):

VII. Concise Statement of Utility

The invention as claimed in independent claim 1 has utility in that it provides a disposable liner to prevent contamination.

Regarding of section II: 6.5, Petitioner failed to satisfy its requirements because lack of specificity. The statement on p. 33 of the AESD regarding the parent application serial number 12/115,620 is not specific enough in the context of section II: 6.5, and mapping of the claims unto the provisional application serial number 60/916,427 is missing altogether. The requirement of section II element 6.5 can be satisfied by listing verbatim all the presently filed claims (by "copy and paste") and by indicating where the instant application (and separately each one of the priority documents – if applicable) teaches each discrete limitation (without bundling limitations to the extent possible) in each one of said presently filed claims, by indicating the element number and/or the relevant page and line numbers. To the extent possible, Petitioner should indicate the enablement location in the specification as required by statute, i.e., "the manner and process of making and using it," rather than pointing to the first occurrence of establishing antecedent for the limitation in the specification. For this reason Petitioner should indicate, to the extent possible, the combination of the element, figure, page, (or paragraph), and line numbers in the specification where the mapped limitation is actually taught and enabled. If the application(s) for which domestic priority is claimed is/are identical to the present application, a statement to the effect that they are "substantially identical" in lieu of the required additional mapping is acceptable. Petitioner's attention is also drawn to the requirements relevant under 35 U.S.C 112, 6th paragraph, listed above. Should this requirement not apply to the present application, Petitioner should make a statement in this regard (requirement presently satisfied).

DECISION

For at least the above-stated reason (for failing to meet the requirement of section II: elements II:5.2, 6.2, 6.3, 6.4, and 6.5), the petition is **DENIED**. The application will remain in its regular status and will be taken up by the examiner for action in its regular turn.

Petitioner is reminded that a single opportunity to perfect the petition is given. Therefore, further petitions for accelerated examination in this application will not be entertained.

Any inquiry regarding this decision should be directed to Ehud Gartenberg, TC 3700 Special Program Examiner, at (571) 272-4828.

Ehud Gartenberg
Special Program Examiner
Technology Center 3700

UNITED STATES PATENT AND TRADEMARK OFFICE

UNITED STATES DEPARTMENT OF COMMERCE
United States Patent and Trademark Office
Address: COMMISSIONER FOR PATENTS
P.O. Box 1450
Alexandria, Virginia 22313-1450
www.uspto.gov

APPLICATION NO.	FILING DATE	FIRST NAMED INVENTOR	ATTORNEY DOCKET NO.	CONFIRMATION NO.
12/192,521	08/15/2008	Quy That Ton	E9063-00023	2891

75715 7590 05/01/2009
DUANE MORRIS LLP - Atlanta
IP DEPARTMENT
ATLANTIC CENTER PLAZA
1180 WEST PEACHTREE STREET, NW SUITE 700
ATLANTA, GA 30309-3348

EXAMINER

ART UNIT	PAPER NUMBER
3751	

MAIL DATE	DELIVERY MODE
05/01/2009	PAPER

Please find below and/or attached an Office communication concerning this application or proceeding.

The time period for reply, if any, is set in the attached communication.

UNITED STATES PATENT AND TRADEMARK OFFICE

Commissioner for Patents
United States Patent and Trademark Office
P.O. Box 1450
Alexandria, VA 22313-1450
www.uspto.gov

DUANE MORRIS LLP - Atlanta
IP DEPARTMENT
ATLANTIC CENTER PLAZA
1180 WEST PEACHTREE STREET, NW SUITE 700
ATLANTA GA 30309-3348

In re Application of: TON Serial No.: 12/192,521 Filed: August 15, 2008 Title: DISPOSABLE LINER FOR A BASIN	DECISION ON PETITION TO MAKE SPECIAL FOR NEW APPLICATION UNDER 37 C.F.R. § 1.102 & M.P.E.P. § 708.02

This is a decision in response to the submission denominated "Petition For Reconsideration of Petition to Make Special under 37 CFR 1.181" received on December 9, 2008. The delay in processing this petition is regretted. Petitioner seeks relief under 37 CFR 1.181 from the decision mailed October 29, 2008 denying accelerated examination status for the instant application. The signatory of the October 29, 2008 decision denying accelerated examination status possessed delegated authority to act on behalf of the Technology Center Director in such matters. Therefore, the petition received on December 9, 2008 is a request for review of a decision of a Technology Center Director. Accordingly, the Office of the Deputy Commissioner for Patent Examination Policy has decision-making authority over Applicant's petition. M.P.E.P. § 1002.02(b)(15).

The petition under 37 CFR 1.181 to reconsider the denial of accelerated examination status for application No. 12/192,521and to grant such status under 37 CFR 1.102 is **DENIED**.

Background

The above-identified application was filed under 35 U.S.C. § 111(a) on August 15, 2008 and accompanied by a petition under 37 CFR 1.102(d) to make the application special under the accelerated examination program. See 71 Fed. Reg. 36,323.

On September 10, 2008, the United States Patent and Trademark Office (USPTO) issued a decision dismissing said petition (hereinafter "the dismissal") based upon failure to meet policy conditions 5.2, 6.2, 6.3, 6.4 and 6.5. A full explanation of each of the deficiencies was provided in the decision.

On October 10, 2008, Applicant filed a Request for Reconsideration of the Decision on Petition.

On October 29, 2008 the United States Patent and Trademark Office (USPTO) issued a decision denying said petition (herinafter "the denial") based upon a failure to meet any of the policy requirements previously found deficient. A full explanation of the remaining deficiencies was provided in the decision.

On December 9, 2008, Applicant submitted the instant Petition under 37 CFR 1.181 requesting reconsideration of the October 29, 2008 denial of the petition to make special.

Applicable Regulations and Notice Sections

37 CFR 1.102. Advancement of examination.
(a) Applications will not be advanced out of turn for examination or for further action except as provided by this part, or upon order of the Director to expedite the business of the Office, or upon filing of a request under paragraph (b) of this section or upon filing a petition under paragraphs (c) or (d) of this section with a showing which, in the opinion of the Director, will justify so advancing it.
...

(d) A petition to make an application special on grounds other than those referred to in paragraph (c) of this section must be accompanied by the fee set forth in § 1.17(h).

Implementation of 37 CFR 1.102 (c) and (d) is prescribed in "Change to Practice for Petitions in Patent Applications to Make Special and for Accelerated Examination" published in the Federal Register on June 26, 2006 (71 Fed. Reg. 36323) and in MPEP section 708.02(a).

In particular, the specific points of policy referenced in the decisions dismissing and denying the petition are reproduced:

II. Conditions Regarding the Petition:
The petition must:
...

5. include a statement, made based on a good faith belief, that a preexamination search in compliance with the following requirements, was conducted, including an identification of the filed of search by United States class and subclass, where applicable, and for database searches, the search logic or chemical structure or sequence used as a query, the name of the file(s) searched and the database service, and the date of the search.
The preexamination search must:
...

5.2. be directed to the claimed invention and encompass all of the features of the claims, giving the claims the broadest reasonable expectation;
...

6.2. an identification of all the limitations in the claims that are disclosed by the reference specifying where the limitation is disclosed in the cited reference;

6.3. a detailed explanation of how each of the claims are patentable over the references cited with particularity required by 37 CFR 1.111(b) and (c);

6.4. a concise statement of the utility of the invention as defined in each of the independent claims (unless the application is a design application);

6.5. a showing of where each limitation of the claims finds support under 35 USC 112, first paragraph, in the written description of the specification. If applicable, the showing must also identify: (1) each means- (or step) plus-function claim element that invokes consideration under 35 UDC 112, sixth paragraph; and (2) the structure, material, or acts in the specification that corresponds to each means- (or step) plus-function claim element that invokes consideration under 35 UDC 112, sixth paragraph; if the application claims the benefit of one or more applications under title 35, United States Code, the showing must also include where each limitation of the claims finds support under 35 USC 112, first paragraph, in each such application in which such supports exists;

Decision

Petitioner requests reconsideration of the decision denying entry into the accelerated examination program based upon petitioner's assertions that the requisite search was made by petitioner and the example reference provided by the petition deciding examiner as evidence of inadequate search was based upon the deciding examiner's subjective view and is outsides the bounds of 71 Fed. Reg. 36323. Presumably this argument is directed to the denial based upon policy section 5.2 and possibly section 6.3. With respect to the specificity required by section 6.2 of the policy, petitioner argues that no specific instance of "bundling" of limitations was provided by the deciding examiner and in petitioner's opinion each individual element was mapped into the reference(s). With respect to section 6.4, petitioner argues that he had no guidance as to the level of specificity concerning the statement of utility and the deciding examiner was improperly injecting personal subjective requirements into the specification. No specific arguments are provided with respect to the denial based upon section 6.3 or section 6.5.

At the outset, it is noted that any single deficiency in the policy is sufficient to support denial of a petition for Accelerated Examination (AE). That all policy requirements were noticed and discussed in the denial is viewed as a courtesy in aiding petitioner to understand the full application of the policy should petitioner decide to file a continuing application with a petition for Accelerated Examination. In that same light of courtesy this decision will review each point listed in the denial and challenged by petitioner.

(A) With respect to policy requirement 5.2, in the dismissal it was noted:

> *Regarding the requirements of section II element 5.2 outlined above, it appears the search outlined in the petition omitted a critical search area by not searching in class 4 subclasses 655 and DIG 18. The search should be expanded to include all the claimed limitations, in particular those that are identified as defining over the prior art. For example, it is noted that none of the references cited and discussed in the AESD includes basins with drainage holes and respective plugs for said drainage holes - a feature conventionally used in basins at the time of the claimed invention.*

Petitioner was expressly put on notice that the search lacked coverage of a specific area and the search appeared too narrow in that it did not encompass evidence of specific searching for basins with drainage holes and respective plugs. While "drain" and "hole" were listed in the search document as "keywords", a listing of keywords does not substitute for the requirement of search logic found in the AE policy. None of the search logic provided in the original preexamination search document included any of these terms. Review of the supplemental statement of preexamination search reveals the addition of class 4 DIG 18 to the list of areas searched, but the search logic document in this paper remains unchanged from the searches listed in the original preexamination search document. Accordingly, it is apparent petitioner did not expand the field of search to specifically include the features expressly claimed as required by the policy. The examiner's decision to deny based upon inadequate search appears well founded, albeit inadequately communicated in the denial.

The Office agrees with petitioner that the deciding examiner's citation of a reference (located by the examiner) in this section is outside the bounds of 71 Fed. Reg. 36323 and can not form the basis for deciding whether the AE policy requirements have been met. The deciding examiner is reminded that his role is that of an arbiter of the fulfillment of the policy requirements and not that of an examiner of the patent application. Petitioner's signature to the statement that "all statements in support of the petition to make special are based on a good faith belief that the search was conducted in compliance with the requirements of the policy" must be honored. Even though the examiner's actions in the instant application appear based in the intent of constructive guidance when viewed in light of the remaining deficiencies of the petition presentation, such citations are inappropriate.

(B) Turning now to the deficiencies based upon policy requirement 6.2, the deciding examiner noted in the dismissal that petitioner's submission was not specific enough in that petitioner did not address each discrete claim limitation in view of each prior art reference cited in the AE support document. General examples were given to be helpful. In the supplemental support document petitioner again failed to discuss each discrete limitation. For example, with respect to claim 2 petitioner states with respect to Zolotnik '515:

> 2. The disposable liner as defined in claim 1, wherein the bottom wall of the trench includes a drainage hole (not disclosed in the '515 reference).

This claim has two discrete limitations: a bottom wall of the trench, and a drainage hole. It is not know which one petitioner believes is not disclosed in the '515 reference. This is further confused by the fact that with respect to claim 6 in view of the same reference, petitioner refers to a "bottom wall that is attached to the sidewalls (paragraph [0011])", leaving the Office to guess if these are the same bottom wall or a different bottom wall. Further it appears clear petitioner is asserting the Zolotnik '515 reference does not disclose a drainage hole which contradicts the teaching in Zolotnik '515 background of the invention which notes "usually the bathtub liners have a drain ..." which clearly suggests disposable liners are know to have drains even if the particular invention of Zolotnik does not. The Office can not infer or guess petitioner's intention: the representation must be specific enough so as to not materially effect

examination of the application. In the instant application it appears the deciding examiner's decision to deny AE based upon this requirement of the petition is well founded.

(C) Turning to the denial based upon deficiencies in complying with section 6.3, petitioner was fairly noticed in the dismissal that arguments for patentability over the cited prior art must be founded in specific particular claim language, include analysis under 35 USC 103, and that each and every claim's patentability must be specifically addressed. In the response, petitioner failed to address why the teaching in the background section of Zolotnik '515 regarding basin liners having drain holes because of the weight of the water in the basin/liner making it difficult to lift would not suggest to one of ordinary skill in the art to provide drain holes in any basin/liner combination. Although petitioner notes the particular teaching, he maintains a point of patentability is the prior art failure to teach or fairly suggest the provision of a basin liner containing a drainage hole without discussion of the lack of obviousness of the teaching. It appears the deciding examiner's decision to deny AE based upon this requirement of the AE policy is well founded.

(D) Moving on the denial based upon deficiencies in complying with section 6.4, petitioner was fairly noticed in the dismissal that (in the concise statement of the utility of the claimed invention) petitioner should reference each independent claim specifically when discussing utility. The supplemental AE support document does address the utility of each independent claim. This requirement of the AE policy appears to have been met by petitioner and the examiner's decision to deny based upon this section appears unfounded.

(E) Finally, turning to the denial based upon section 6.5, petitioner was fairly noticed in the dismissal that the statement found on page 14 of the AE support document was believed to be in error in view of the priority claim found on the Application Data Sheet. It is a requirement of the AE policy that if the application claims the benefit of one or more applications under title 35, United States Code, the showing must also include where each limitation of the claims finds support under 35 USC 112, first paragraph, in each such application in which such supports exists. In response, petitioner noted that the application does claim benefit as a continuation of previously filed US Patent App No. 12/115,620 but failed to show any support under 35 USC 112, first paragraph in the benefit application for any of the claimed limitations. Petitioner simply did not point out any support for any claimed limitations in the application for which filing date benefit was claimed. It appears the deciding examiner's decision to deny AE based upon this requirement of the petition is also well founded.

CONCLUSION

For the above-stated reasons, the petition under 37 CFR 1.181 to reconsider the denial of Accelerated Examination status in application No. 12/192,521 is **DENIED**. Therefore, the USPTO will examine the above-identified application in accordance with standard examination procedures.

This decision may be viewed as final agency action. See MPEP 1002.02.

Further correspondence with respect to this matter should be addressed as follows:

By mail: Mail Stop
Commissioner for Patents
Post Office Box 1450
Alexandria, VA 22313-1450

Telephone inquiries related to this decision should be directed to Pinchus M. Laufer, Legal Advisor at (571) 272-7726 or in his absence to Joseph Weiss Jr., Legal Advisor at (571) 272-7759.

Robert A Clarke

Robert A. Clarke, Director
Office of Patent Legal Administration
Office of the Deputy Commissioner for Patent Examination Policy

UNITED STATES PATENT AND TRADEMARK OFFICE

Commissioner for Patents
United States Patent and Trademark Office
P.O. Box 1450
Alexandria, VA 22313-1450
www.uspto.gov

NUTTER MCCLENNEN & FISH LLP
WORLD TRADE CENTER WEST
155 SEAPORT BOULEVARD
BOSTON MA 02210-2604

COPY MAILED

SEP 2 2 2009

OFFICE OF PETITIONS

In re Application of
Soane, et al.
Application No. 12/192,522
Filed: August 15, 2008
Atty. Dkt. No.: 107837-26
For: EXPANSION AGENTS FOR PAPER-BASED MATERIALS

: DECISION REFUSING STATUS
: UNDER 37 CFR 1.47(a)

This decision is in response to the petition under 37 CFR 1.47(a) filed March 16, 2009.

The petition under 37 CFR 1.47(a) is **DISMISSED**.

Petitioners are given TWO MONTHS from the mailing date of this decision to reply, correcting the below-noted deficiencies. Any reply should be entitled "Request for Reconsideration of Petition Under 37 CFR 1.47(a)," and should only address the deficiencies noted herein. The reply under 37 CFR 1.47(a) may include an oath or declaration executed by the non-signing inventors. Any extensions of time will be governed by 37 CFR 1.136(a).

A grantable petition under 37 CFR 1.47(a) requires: (1) proof that the non-signing inventor cannot be reached or refuses to sign the oath or declaration after having been presented with the application papers (specification, claims and drawings); (2) an acceptable oath or declaration in compliance with 35 U.S.C. §§ 115 and 116; (3) the petition fee; and (4) a statement of the last known address of the non-signing inventor.

The petition fails to satisfy requirement (2) set forth above. The declaration submitted herewith is not accepted because it contained changes that have not been initialed in violation of 37 CFR 1.52(c).

Please note that in accordance with MPEP 605.04(a), the application filed must be the application executed by the applicant and it is improper for anyone, including counsel, to alter, rewrite, or partly fill in any part of the application, ***including the oath or declaration***, after execution of the oath or declaration by the applicant. Further, any changes made in ink in the application or oath ***prior to signing*** should be initialed and dated by the applicants ***prior to*** execution of the oath or declaration.

Therefore, the Office requires a new oath or declaration as to Inventor Lynn Reis as it is evident by virtue of the non-initialed changes that the declaration previously submitted fails to comply with the aforementioned requirements as well as 37 CFR §§ 1.52(c), 1.63 and 1.64.

Further correspondence with respect to this matter should be addressed as follows:

By mail: Mail Stop Petition
Commissioner for Patents
P.O. Box 1450
Alexandria, VA 22313-1450

By facsimile: (571) 273-8300

By hand: U.S. Patent and Trademark Office
Customer Service Window
Mail Stop Petition
Randolph Building
401 Dulany Street
Alexandria, VA 22314

Telephone inquiries related to this decision may be directed to the undersigned at (571) 272-3205.

/ALESIA M. BROWN/

Alesia M. Brown
Petitions Attorney
Office of Petitions

UNITED STATES PATENT AND TRADEMARK OFFICE

UNITED STATES DEPARTMENT OF COMMERCE
United States Patent and Trademark Office
Address: COMMISSIONER FOR PATENTS
P.O. Box 1450
Alexandria, Virginia 22313-1450
www.uspto.gov

APPLICATION NO.	FILING DATE	FIRST NAMED INVENTOR	ATTORNEY DOCKET NO.	CONFIRMATION NO.
12/192,524	08/15/2008	Hisatoshi HIROTA	082042	2899

7590 10/08/2009
WESTERMAN, HATTORI, DANIELS & ADRIAN, LLP
1250 CONNECTICUT AVENUE, NW
SUITE 700
WASHINGTON, DC 20036

EXAMINER
NORMAN, MARC E

ART UNIT	PAPER NUMBER
3744	

NOTIFICATION DATE	DELIVERY MODE
10/08/2009	ELECTRONIC

DECISION GRANTING PETITION UNDER 37 CFR 1.138(d)

The declaration of express abandonment is recognized

This is in response to the petition under 37 CFR 1.138(d), requesting for a refund of any previously paid search fee and excess claims fee in the above-identified application.

The petition is granted.

The express abandonment is recognized. Any previously paid search fee and excess claims fee are hereby refunded.

Telephone inquiries should be directed to the Office of Data Management at (571) 272-4200.

Mimi Farmer

Patent Publication Branch
Office of Data Management

Refund Ref:
10/09/2009 0030075356

Credit Card Refund Total: $510.00

AE Exp.: XXXXXXXXXXXX1053

Adjustment date: 10/08/2009 NFARMER
08/18/2008 INTEFSW 00000509 12192524
02 FC:1111 -510.00 OP

FORM PET651G (Rev. 08/07)

UNITED STATES PATENT AND TRADEMARK OFFICE

Commissioner for Patents
United States Patent and Trademark Office
P.O. Box 1450
Alexandria, VA 22313-1450
www.uspto.gov

Lawrence Cruz
Conair Corporation
One Cummings Point Road
STAMFORD CT 06902

COPY MAILED

AUG 03 2009

OFFICE OF PETITIONS

In re Application of	:	
Patrick Brouillard	:	
Application No. 12/192,538	:	DECISION ON PETITION
Filing Date: August 15, 2008	:	
Attorney Docket No. 1385/U	:	

This is a decision on the petition under the unintentional provisions of 37 CFR 1.137(b), filed May 27, 2009, to revive the above-identified application.

The petition is **GRANTED**.

The application became abandoned for failure to reply in a timely manner to the Notice to File Missing Parts of Nonprovisional Application (Notice), mailed August 29, 2008. The Notice set a period for reply of two (2) months from the mail date of the Notice. No extensions of time under the provisions of 37 CFR 1.136(a) were obtained. Accordingly, the application became abandoned on October 30, 2008.

The petition satisfies the requirements of 37 CFR 1.137(b) in that petitioner has supplied (1) the reply in the form of oath or declaration and surcharge, (2) the petition fee of $1,620 (3) a proper statement of unintentional delay.

Telephone inquiries concerning this decision should be directed to JoAnne Burke at 571-272-4584.

This application is being referred to the Office of Patent Application Processing.

Ramesh Krishnamurthy

Ramesh Krishnamurthy
Petitions Examiner
Office of Petitions

UNITED STATES PATENT AND TRADEMARK OFFICE

COMMISSIONER FOR PATENTS
UNITED STATES PATENT AND TRADEMARK OFFICE
P.O. BOX 1450
ALEXANDRIA, VA 22313-1450
www.uspto.gov

VOLPE AND KOENIG, P.C.
UNITED PLAZA, SUITE 1600
30 SOUTH 17TH STREET
PHILADELPHIA PA 19103

MAILED

JUL 14 2009

OFFICE OF PETITIONS

Applicant: Mori, et al.
Appl. No.: 12/192,580
Filing Date: August 15, 2008
Title: SWITCH MECHANISM USABLE UNDERWATER
Attorney Docket No.: IPO-P2242.2
Pub. No.: US 2008/0308396 A1
Pub. Date: December 18, 2008

This is a decision on the request for a corrected patent application publication under 37 CFR 1.221(b), received on February 18, 2009, for the above-identified application

The request is DISMISSED.

Applicant requests that the application be republished because the patent application publication contains a material error on the front page of the application wherein one of the inventors', Naoki Matsumoto should not have been listed.

37 CFR 1.221 (b) is applicable "only when the Office makes a material mistake which is apparent from Office records.... Any request for a corrected publication or revised patent application publication other than provided as provided in paragraph (a) of this section must be filed **within two months** from the date of the patent application publication. **This period is not extendable**." A material mistake must affect the public's ability to appreciate the technical disclosure of the patent application publication, to determine the scope of the patent application publication, or to determine the scope of the provisional rights that an applicant may seek to enforce upon issuance of a patent. [1]

The error noted by applicant wherein the deleted inventor was improperly included with the publication may be an Office error, but it is not a material Office error under 37 CFR 1.221. The listing of an inventor's name who is no longer involved with the application does not affect the understanding of the application. The mistakes do not affect the public's ability to appreciate the technical disclosure of the patent application publication, or determine the scope of the patent application publication or determine the scope of the provisional rights that an applicant may seek to enforce upon issuance of a patent.

[1] Changes to Implement Eighteen-Month Publication of Patent Applications, 65 FR 57023, 57038 (Sept. 20, 2000), 1239, Off. Gaz. Pat. Office Notices 63, 75 (Oct. 10, 2000) (final rule).

The application as filed included a Request for Correction of Inventorship under 37 CFR 1.48(b). It is noted that a request for correction of inventorship under 37 CFR 1.48(b) is decided by the Primary Examiner and is not decided or reviewed in initial application processing in the Office of Patent Application Processing (OPAP). See MPEP 1000.02(e). Where the name of an inventor(s) is to be deleted, applicant can file a continuation or divisional application (using a copy of the executed oath or declaration from the parent application) with a request for deletion of the name of the inventor(s). See 37 CFR 1.63(d)(2). See MPEP 200.03.

The applicant is advised that a "request for republication of an application previously published" may be filed under 37 CFR 1.221 (a). Such a request for republication "must include a copy of the application compliance with the Office's electronic filing system requirements and be accompanied by the publication fee set forth in § 1.18 (d) and the processing fee set forth in § 1.17 (i)." If the request for republication does not comply with the electronic filing system requirements, the republication will not take place and the publication fee set forth in § 1.18 (d) will be refunded. The processing fee will be retained.

A guide for filing a request for a Pre-Grant Publication, such as a request for republication, may be found on the link below:

http://www.uspto.gov/ebc/portal/tutorials.htm

Any request for republication under 37 CFR 1.221(a), must be submitted via the EFS system, as a "Pre-Grant Publication" and questions or request for reconsideration of the decision, should be addressed as follows:

By mail to: Mail Stop PGPUB
Commissioner for Patents
P.O. Box 1450
Alexandria, Va. 22313-1450

Inquiries relating to this matter may be directed to Mark Polutta at (571) 272-7709.

Mark Polutta
Senior Legal Advisor
Office of Patent Legal Administration
Office of the Deputy Commissioner
for Patent Examination Policy

UNITED STATES PATENT AND TRADEMARK OFFICE

UNITED STATES DEPARTMENT OF COMMERCE
United States Patent and Trademark Office
Address: COMMISSIONER FOR PATENTS
P.O. Box 1450
Alexandria, Virginia 22313-1450
www.uspto.gov

APPLICATION NO.	FILING DATE	FIRST NAMED INVENTOR	ATTORNEY DOCKET NO.	CONFIRMATION NO.
12/192,596	08/15/2008	Christopher Doan	AUS920080617US1	3063

79452 7590 10/09/2008
Shimokaji & Associates, P.C.
8911 Research Drive
Irvine, CA 92618

EXAMINER

ART UNIT	PAPER NUMBER
3623	

MAIL DATE	DELIVERY MODE
10/09/2008	PAPER

Please find below and/or attached an Office communication concerning this application or proceeding.

The time period for reply, if any, is set in the attached communication.

UNITED STATES PATENT AND TRADEMARK OFFICE

Commissioner for Patents
United States Patent and Trademark Office
P.O. Box 1450
Alexandria, VA 22313-1450
www.uspto.gov

MAILED FROM
DIRECTORS OFFICE
OCT - 9 2008
TECHNOLOGY CENTER

Shimokaji & Associates, P.C.
8911 Research Drive
Irvine CA 92618

In re application of : **DECISION ON PETITION**
Doan et al. : **TO MAKE SPECIAL FOR**
Application No. 12/192,596 : **NEW APPLICATION**
Filed: August 15, 2008 : **UNDER 37 CFR 1.102**
For: AUTOMATIC SURVEY REQUEST BASED ON TICKET ESCALATION

This is a decision on the petition filed on August 15, 2008 to make the above-identified application special for accelerated examination procedure under 37 C.F.R. § 1.102(d).

The petition to make the application special is **DISMISSED**.

REGULATION AND PRACTICE

A grantable petition to make special under 37 C.F.R. § 1.102(d) and pursuant to the "Change to Practice for Petitions in Patent Applications to Make Special and for Accelerated Examination" published in the Federal Register on June 26, 2006 (71 Fed. Reg. 36323), must satisfy the following conditions:

I. Conditions Regarding the Application:

1. the application must be a non-reissue utility or design application filed under 37 CFR 1.111(a);
2. the application, the petition and the required fees must be filed electronically using the USPTO's electronic filing system (EFS), or EFS-web; if not filed electronically, a statement asserting that EFS and EFS-web were not available during the normal business hours.
3. at the time of filing, the application must be complete under 37 CFR 1.51 and in condition for examination;
4. the application must contain three or fewer independent claims and twenty or fewer total claims and the claims must be directed to a single invention.

II. Conditions Regarding the Petition:

The petition must:

1. be filed with the application;
2. include a statement that applicant agrees not to separately argue the patentability of any independent claim during any appeal in the application;

3. include a statement that applicant agrees to make an election without traverse in a telephone interview.

4. include a statement that applicant agrees to conduct such an interview when requested by the examiner.

5. include a statement, made based on a good faith belief, that a preexamination search in compliance with the following requirements, was conducted, including an identification of the field of search by United States class and subclass, where applicable, and for database searches, the search logic or chemical structure or sequence used as a query, the name of the file(s) searched and the database service, and the date of the search.

The preexamination search must:

5.1 involve U.S. patents and patent application publications, foreign patent documents, and non-patent literature, unless the applicant can justify with reasonable certainty that no references more pertinent than those already identified are likely to be found in the eliminated sources and includes such a justification with this statement;

5.2. be directed to the claimed invention and encompass all of the features of the claims, giving the claims the broadest reasonable interpretation;

5.3. encompass the disclosed features that may be claimed.

6. must provide in support of the petition an accelerated examination support document.

An accelerated examination support document must include:

6.1. an information disclosure statement (IDS) in compliance with 37 CFR 1.98 citing each reference deemed most closely related to the subject matter of each of the claims;

6.2. an identification of all the limitations in the claims that are disclosed by the reference specifying where the limitation is disclosed in the cited reference;

6.3. a detailed explanation of how each of the claims is patentable over the references cited with particularity required by 37 CFR 1.111(b) and (c);

6.4. a concise statement of the utility of the invention as defined in each of the independent claims (unless the application is a design application);

6.5. a showing of where each limitation of the claims finds support under 35 USC 112, first paragraph, in the written description of the specification. If applicable, the showing must also identify: (1) each means- (or step) plus-function claim element that invokes consideration under 35 USC 112, sixth paragraph; and (2) the structure, material, or acts in the specification that corresponds to each means- (or step) plus-function claim element that invokes consideration under 35 USC 112, sixth paragraph; if the application claims the benefit of one or more applications under title 35, United States Code, the showing must also include where each limitation of the claims finds support under 35 USC 112, first paragraph, in each such application in which such supports exists;

6.6. an identification of any cited references that may be disqualified under 35 USC 103(c).

REVIEW OF FACTS

The petition in this case fails to comply with condition II.5.1 and II.5.2.

Regarding Condition II.5.1, it is required that Applicant's search involve U.S. patents and patent application publications, foreign patent documents, and non-patent literature, unless the applicant can justify with reasonable certainty that no references more pertinent than those already identified are likely to be found in the eliminated sources and includes such a justification with this statement. Applicant has searched the US patents and patent application publications, however the applicant has only searched these in conjunction with a text search. The applicant has failed to do a complete search on the applicable US classes and subclasses.

As per Condition II.5.2, the preexamination search must be directed to the claimed invention and encompass all of the features of the claims, giving the claims the broadest reasonable interpretation. All of Applicant's searches (US Patent Resources, US Published Applications, Foreign Patent Resources and Non-Patent Literature Resources) are very broad and does not focus on many of the recited claim features. In particular, Applicant did not search the features he indicated as patentable such as: "establishing a customer database including service level agreements...", "analyzing the service request...", "attaching the customer's associated service level agreement to the problem ticket", "adding relevant configuration item information to the incident/problem ticket", "sending the customer a first customized customer satisfaction survey...", "analyzing the customer feedback patterns...", "recommending modifications to a customer's service level agreement...", "searching stored customer feedback and customized surveys by keywords", "sending future service requests stored customer surveys...", and "evaluating the stored customer feedback and stored customized surveys...". The Applicant asserts that these features contribute to the patentability of the claimed invention; therefore, special emphasis should be placed on these details in the search queries.

A recommended search query for the above features that may be executed in all databases of East is as follows:

L1 ((customer$1 or user$1 or client$1) near3 (account$1 or record$1 or database$1)) and ((service near3 (agreement$1 or contract$1)) or (service adj level adj agreement)) and (service near3 (request$1 or ticket$1)) and ((report$3 near3 (problem$1 or trouble$1 or incident$)) or

((problem$1 or trouble$1 or incident$1) near3 ticket$1) or (escalat$3)) and ((problem$1 or trouble$1) near3 (resolution$1 or resolv$3))

L2 L1 and ((analyz$3 or assess$4 or evaluat$3 or determin$3) same request$1 same ((level$1 or code$1 or rank$3 or value$1) near3 (severity or risk$1 or importance)))

L3 L1 and ((add$3 near5 (ticket$1 or escalat$3)))

L4 L1 and (((customer$1 or user$1 or client$1) near5 (feedback or opinion$1 or response$1)) and (survey$1 or questionnaire$1))

L5 L4 and ((analyz$3 or assess$4 or evaluat$3 or determin$3) near5 (satisf$6 or dissatisf$6 or unsatisf$6))

L6 L4 and (modif$6 or change$1 or revis$3)

Please keep in mind that these are non-limiting search suggestions and they are only meant to serve as a possible starting point for Applicant's preexamination search. Additional guidance regarding the proper manner of performing and documenting a preexamination search may be found on the following web site: http://www.uspto.gov/web/patents/accelerated/ Applicant is expected to perform more supplemental searches than the sample search queries listed above.

DECISION

For the above stated reasons, the petition is **DISMISSED**. The application will therefore be taken up by the examiner for action in its regular turn.

Petitioner is given a single opportunity to perfect the petition. Any request for reconsideration of this decision must be submitted within one (1) month or thirty (30) days, whichever is longer, from the date of this decision. No extensions of time will be granted under 37 CFR 1.136(a) if the request is to be considered timely. Any request for reconsideration must address the deficiencies indicated above.

Petitioner is reminded that, upon granting of the special status of the application on request for reconsideration, the application will be processed expeditiously. However, due to the dismissal of the instant petition, examination may not be completed within twelve months of the filing date of the application.

Any inquiry regarding this decision should be directed to Robert Weinhardt, Business Practice Specialist, at (571) 272-6633, C. Michelle Tarae, Business

Practice Specialist at (571) 272-6727, or Jamisue Plucinski, Primary Examiner at (571) 272-6811.

C. Michelle Tarae
Business Practice Specialist
Technology Center 3600

CMT/JP/10/8/08

UNITED STATES PATENT AND TRADEMARK OFFICE

Commissioner for Patents
United States Patent and Trademark Office
P.O. Box 1450
Alexandria, VA 22313-1450
www.uspto.gov

MAILED FROM
DIRECTORS OFFICE

DEC - 5 2008

TECHNOLOGY CENTER

IBM - SPP
SHIMOKAJI & ASSOCIATES, P.C.
8911 Research Drive
Irvine CA 92618

In re application of
Doan et al.
Application No. 12/192,596
Filed: August 15, 2008
For: AUTOMATIC SURVEY REQUEST BASED ON TICKET ESCALATION

: **DECISION ON PETITION**
: **TO MAKE SPECIAL FOR**
: **NEW APPLICATION**
: **UNDER 37 CFR 1.102**

This is a decision on the renewed petition filed on November 07, 2008 to make the above-identified application special for accelerated examination procedure under 37 C.F.R. § 1.102(d).

The petition to make the application special is **DENIED**.

A petition to make special was filed in the above-identified application under 37 CFR 1.102(d) on August 15, 2008. That petition was dismissed in a decision mailed October 09, 2008 wherein a non-extendible period of 1 (one) month or 30 (thirty) days, whichever was longer, was set to request reconsideration.

The reasons for the dismissal included a finding of an inadequate Search Document

With the updated Search Document filed November 07, 2008, the applicant has failed to sufficiently address all of the issues raised in the dismissal in the updated Search Document.

Specifically, in regards to Condition II.5.1, the dismissal indicated that the applicant's US patents and US Patent application publication searches do not sufficiently search the applicable US classes and subclasses, that the applicant has only searched these in conjunction with a text search. In an effort to remedy this issue, the updated search document indicated that class/subclasses were searched, however included the statement "The above subclasses were searched using the search strategy shown below:" Therefore the applicant has still only searched the US class/subclasses in conjunction with a text search and has failed to do a complete search on the applicable US classes and subclasses.

In regards to Condition II.5.2, the dismissal indicated that all of applicant's searches, including US Patent, US Published Applications, Foreign Patent Resources and Non-Patent Literature Resources) were very broad and did not search the features which

was indicated as being patentable including: "establishing a customer database including service level agreements...", "analyzing the service request...", "attaching the customer's associated service level agreement to the problem ticket", "adding relevant configuration item information to the incident/problem ticket", "sending the customer a first customized customer satisfaction survey...", analyzing the customer feedback patterns...", recommending modifications to a customer's service level agreement...", "recommending modifications to a customer's service level agreement...", searching stored customer feedback and customized surveys by keywords", "sending future service requests stored customer surveys..." and "evaluating the stored customer feedback and stored customized surveys...". The dismissal included recommended search strings which would encompass the features which the applicant has indicated as being patentable.

Where as the updated search document included an updated search, the updated search only incorporated a few terms suggested by the dismissal and did not include a majority of the search terms which were given in the recommended search. For example, the updated search did not focus on any database that includes service level agreements, in fact the word database was never even searched, yet the applicant has indicated the creation of the database as being a patentable feature, and in fact the word database was never searched at all. Furthermore, the updated search using Delphion was only done in the "claims" field of the documents and should have been done in the entire document. Therefore none of the features listed above, which the applicant has indicated as being patentable, have been searched. The features listed above, given the recommended search query in the dismissal, should have been searched in order to make a clear determination on patentability.

For the reasons listed above, Conditions II.5.1 and II.5.2 have not been satisfied and the petition is **DENIED**. The application will therefore be taken up by the examiner for action in its regular turn.

Petitioner is reminded that a only single opportunity to perfect the petition is given. Therefore, further petitions for accelerated examination in this application will not be entertained.

Any inquiry regarding this decision should be directed to Robert Weinhardt at (571) 272-6633 or C. Michelle Tarae at (571) 272-6727, both Business Practice Specialists, or Jamisue Plucinski at (571) 272-6811, Primary Examiner.

Robert Weinhardt
Business Practice Specialist
Technology Center 3600

RW/JP/12/01/08

UNITED STATES PATENT AND TRADEMARK OFFICE

Commissioner for Patents
United States Patent and Trademark Office
P.O. Box 1450
Alexandria, VA 22313-1450
www.uspto.gov

IBM CORPORATION
INTELLECTUAL PROPERTY LAW
11501 BURNET ROAD
AUSTIN TX 78758

COPY MAILED

AUG 03 2009

OFFICE OF PETITIONS

In re Application of
David Arlen Elko et al
Application No. 12/192,597
Filed: August 15, 2008
Attorney Docket No. AUS920030077US2

DECISION GRANTING PETITION
UNDER 37 CFR 1.313(c)(2)

This is a decision on the petition under 37 CFR 1.313(c)(2), filed July 31, 2009, to withdraw the above-identified application from issue after payment of the issue fee.

The petition is **GRANTED**.

The above-identified application is withdrawn from issue for consideration of a submission under 37 CFR 1.114 (request for continued examination). *See* 37 CFR 1.313(c)(2).

Petitioner is advised that the issue fee paid on July 7, 2009 cannot be refunded. If, however, this application is again allowed, petitioner may request that it be applied towards the issue fee required by the new Notice of Allowance.[1]

Telephone inquiries should be directed to the undersigned at (571) 272-3208.

This application is being referred to Technology Center AU 2441 for processing of the request for continued examination under 37 CFR 1.114 and for consideration of the concurrently filed IDS.

/Karen Creasy/
Karen Creasy
Petitions Examiner
Office of Petitions

---

[1] *The request to apply the issue fee to the new Notice may be satisfied by completing and returning the new Part B – Fee(s) Transmittal Form (along with any balance due at the time of submission). Petitioner is advised that the Issue Fee Transmittal Form* ***must*** *be completed and timely submitted to avoid abandonment of the application.*

Best Available Copy

UNITED STATES PATENT AND TRADEMARK OFFICE

UNITED STATES DEPARTMENT OF COMMERCE
United States Patent and Trademark Office
Address: COMMISSIONER FOR PATENTS
P.O. Box 1450
Alexandria, Virginia 22313-1450
www.uspto.gov

APPLICATION NO.	FILING DATE	FIRST NAMED INVENTOR	ATTORNEY DOCKET NO.	CONFIRMATION NO.
12/192,602	08/15/2008	Daisuke HAYASHI	330717US26	3075

7590 06/25/2010
OBLON, SPIVAK, MCCLELLAND MAIER & NEUSTADT, L.L.P.
1940 DUKE STREET
ALEXANDRIA, VA 22314

EXAMINER
NUCKOLS, TIFFANY Z

ART UNIT	PAPER NUMBER
1716	

NOTIFICATION DATE	DELIVERY MODE
06/25/2010	ELECTRONIC

DECISION GRANTING PETITION UNDER 37 CFR 1.138(d)

The declaration of express abandonment is recognized

This is in response to the petition under 37 CFR 1.138(d), requesting for a refund of any previously paid search fee and excess claims fee in the above-identified application.

The petition is granted.

The express abandonment is recognized. Any previously paid search fee and excess claims fee are hereby refunded.

Telephone inquiries should be directed to the Office of Data Management at (571) 272-4200.

Mimi Harmel

Patent Publication Branch
Office of Data Management

FORM PET651G (Rev. 08/07)

UNITED STATES PATENT AND TRADEMARK OFFICE

Commissioner for Patents
United States Patent and Trademark Office
P.O. Box 1450
Alexandria, VA 22313-1450
www.uspto.gov

FULBRIGHT & JAWORSKI, LLP
1301 MCKINNEY
SUITE 5100
HOUSTON TX 77010-3095

MAILED

JUN 0 3 2010

OFFICE OF PETITIONS

In re Application of	:	
Karim Alhussiny	:	
Application No. 12/192,607	:	DECISION ON PETITION
Filed: August 15, 2008	:	TO WITHDRAW
Attorney Docket No. **HO-P03614US0**	:	FROM RECORD
	:	

This is a decision on the Request to Withdraw as attorney or agent of record under 37 CFR § 1.36(b), filed April 7, 2010.

The request is **NOT APPROVED**.

A review of the file record indicates that Leslie Streeter or any attorneys/agents associated with Customer Number 26271 does not have power of attorney or was ever given power of attorney in the above-identified application. Accordingly, the request to withdraw under 37 CFR § 1.36(b) is not applicable.

According to our records the Customer Number has been listed as the Representative Information in the application data sheet. However, providing the information in the application data sheet does not constitute as a power of attorney in the application. ***See 37 CFR § 1.76(b)(4)***.

All future communications from the Office will continue to be directed to the address of record until otherwise properly notified by the applicant.

Telephone inquires concerning this decision should be directed to the undersigned at 571-272-4584.

/JoAnne Burke/
JoAnne Burke
Petitions Examiner
Office of Petitions

UNITED STATES PATENT AND TRADEMARK OFFICE

UNITED STATES DEPARTMENT OF COMMERCE
United States Patent and Trademark Office
Address: COMMISSIONER FOR PATENTS
P.O. Box 1450
Alexandria, Virginia 22313-1450
www.uspto.gov

APPLICATION NO.	FILING DATE	FIRST NAMED INVENTOR	ATTORNEY DOCKET NO.	CONFIRMATION NO.
12/192,613	08/15/2008	Ester Fernandez-Salas	17746CON2(BOT)	3092

7590 02/06/2009

ALLERGAN, INC.
2525 DUPONT DRIVE, T2-7H
IRVINE, CA 92612-1599

EXAMINER
SWOPE, SHERIDAN

ART UNIT	PAPER NUMBER
1652	

MAIL DATE	DELIVERY MODE
02/06/2009	PAPER

DECISION GRANTING PETITION UNDER 37 CFR 1.138(d)

The declaration of express abandonment is recognized

This is in response to the petition under 37 CFR 1.138(d), requesting for a refund of any previously paid search fee and excess claims fee in the above-identified application.

The petition is granted.

The express abandonment is recognized. Any previously paid search fee and excess claims fee are hereby refunded.

Telephone inquiries should be directed to the Office of Data Management at (571) 272-4200.

Nimi Farmer

Patent Publication Branch
Office of Data Management

Adjustment date: 02/09/2009 NFARMER
08/18/2008 INTEFSW 00001242 010885 12192613
02 FC:1111 510.00 CR

FORM PET651G (Rev. 08/07)

UNITED STATES PATENT AND TRADEMARK OFFICE

COMMISSIONER FOR PATENTS
UNITED STATES PATENT AND TRADEMARK OFFICE
P.O. BOX 1450
ALEXANDRIA, VA 22313-1450
www.uspto.gov

VOLPE AND KOENIG, P.C.
UNITED PLAZA, SUITE 1600
30 SOUTH 17TH STREET
PHILADELPHIA, PA 19103

Applicant: Sakaguchi, et al.
Appl. No.: 12/192,617
Filing Date: August 15, 2008
Title: SWITCH MECHANISM USABLE UNDERWATER
Attorney Docket No.: IPO-P2242.1
Pub. No.: US 2009/0014297 A1
Pub. Date: January 15, 2009

This is a decision on the request for a corrected patent application publication under 37 CFR 1.221(b), received on February 18, 2009, for the above-identified application

The request is DISMISSED.

Applicant requests that the application be republished because the patent application publication contains a material error on the front page of the application wherein one of the inventors', Ikko Mori should not have been listed.

37 CFR 1.221 (b) is applicable "only when the Office makes a material mistake which is apparent from Office records.... Any request for a corrected publication or revised patent application publication other than provided as provided in paragraph (a) of this section must be filed **within two months** from the date of the patent application publication. **This period is not extendable.**" A material mistake must affect the public's ability to appreciate the technical disclosure of the patent application publication, to determine the scope of the patent application publication, or to determine the scope of the provisional rights that an applicant may seek to enforce upon issuance of a patent. [1]

The error noted by applicant wherein the deleted inventor was improperly included with the publication may be an Office error, but it is not a material Office error under 37 CFR 1.221. The listing of an inventor's name who is no longer involved with the application does not affect the understanding of the application. The mistakes do not affect the public's ability to appreciate the technical disclosure of the patent application publication, or determine the scope of the patent application publication or determine the scope of the provisional rights that an applicant may seek to enforce upon issuance of a patent.

---

[1] Changes to Implement Eighteen-Month Publication of Patent Applications, 65 FR 57023, 57038 (Sept. 20, 2000), 1239, Off. Gaz. Pat. Office Notices 63, 75 (Oct. 10, 2000) (final rule).

The application as filed included a Request for Correction of Inventorship under 37 CFR 1.48(b). It is noted that a request for correction of inventorship under 37 CFR 1.48(b) is decided by the Primary Examiner and is not decided or reviewed in initial application processing in the Office of Patent Application Processing (OPAP). See MPEP 1000.02(e). Where the name of an inventor(s) is to be deleted, applicant can file a continuation or divisional application (using a copy of the executed oath or declaration from the parent application) with a request for deletion of the name of the inventor(s). See 37 CFR 1.63(d)(2). See MPEP 200.03.

The applicant is advised that a "request for republication of an application previously published" may be filed under 37 CFR 1.221 (a). Such a request for republication "must include a copy of the application compliance with the Office's electronic filing system requirements and be accompanied by the publication fee set forth in § 1.18 (d) and the processing fee set forth in § 1.17 (i)." If the request for republication does not comply with the electronic filing system requirements, the republication will not take place and the publication fee set forth in § 1.18 (d) will be refunded. The processing fee will be retained.

A guide for filing a request for a Pre-Grant Publication, such as a request for republication, may be found on the link below:

http://www.uspto.gov/ebc/portal/tutorials.htm

Any request for republication under 37 CFR 1.221(a), must be submitted via the EFS system, as a "Pre-Grant Publication" and questions or request for reconsideration of the decision, should be addressed as follows:

By mail to: Mail Stop PGPUB
Commissioner for Patents
P.O. Box 1450
Alexandria, Va. 22313-1450

Inquiries relating to this matter may be directed to Mark Polutta at (571) 272-7709.

Mark Polutta
Senior Legal Advisor
Office of Patent Legal Administration
Office of the Deputy Commissioner
for Patent Examination Policy

UNITED STATES PATENT AND TRADEMARK OFFICE

UNITED STATES DEPARTMENT OF COMMERCE
United States Patent and Trademark Office
Address: COMMISSIONER FOR PATENTS
P.O. Box 1450
Alexandria, Virginia 22313-1450
www.uspto.gov

APPLICATION NO.	FILING DATE	FIRST NAMED INVENTOR	ATTORNEY DOCKET NO.	CONFIRMATION NO.
12/192,650	08/15/2008	Karen Smith		3174

77743 7590 08/30/2008
Karen Smith
26500 W. Agoura Road #102-651
Calabasas, CA 91302

EXAMINER

ART UNIT	PAPER NUMBER
3643	

MAIL DATE	DELIVERY MODE
08/30/2008	PAPER

Please find below and/or attached an Office communication concerning this application or proceeding.

The time period for reply, if any, is set in the attached communication.

UNITED STATES PATENT AND TRADEMARK OFFICE

Commissioner for Patents
United States Patent and Trademark Office
P.O. Box 1450
Alexandria, VA 22313-1450
www.uspto.gov

MAILED
FROM DIRECTORS OFFICE

AUG 3 0 2008

TECHNOLOGY CENTER 3600

Karen Smith
26500 W. Agoura Road #102-651
Calabassas, CA 91302

In re application of
Karen Smith
Application No. 12/192,650
Filed: August 15, 2008
For: Transportable Retractable Leash

DECISION ON PETITION TO MAKE SPECIAL FOR NEW APPLICATION UNDER 37 CFR 1.102

This is a decision on the petition filed on August 15, 2008 to make the above-identified application special for accelerated examination procedure under 37 C.F.R. § 1.102(d).

The petition to make the application special is **DENIED**.

REGULATION AND PRACTICE

A grantable petition to make special under 37 C.F.R. § 1.102(d) and pursuant to the "Change to Practice for Petitions in Patent Applications to Make Special and for Accelerated Examination" published in the Federal Register on June 26, 2006 (71 Fed. Reg. 36323), must satisfy the following conditions:

I. Conditions Regarding the Application:

1. the application must be a non-reissue utility or design application filed under 37 CFR 1.111(a);
2. the application, the petition and the required fees must be filed electronically using the USPTO's electronic filing system (EFS), or EFS-web; if not filed electronically, a statement asserting that EFS and EFS-web were not available during the normal business hours.
3. at the time of filing, the application must be complete under 37 CFR 1.51 and in condition for examination;
4. the application must contain three or fewer independent claims and twenty or fewer total claims and the claims must be directed to a single invention.

II. Conditions Regarding the Petition:

The petition must:

1. be filed with the application;

2. include a statement that applicant agrees not to separately argue the patentability of any independent claim during any appeal in the application;

3. include a statement that applicant agrees to make an election without traverse in a telephone interview.

4. include a statement that applicant agrees to conduct such an interview when requested by the examiner.

5. include a statement, made based on a good faith belief, that a preexamination search in compliance with the following requirements, was conducted, including an identification of the field of search by United States class and subclass, where applicable, and for database searches, the search logic or chemical structure or sequence used as a query, the name of the file(s) searched and the database service, and the date of the search.

The preexamination search must:

5.1 involve U.S. patents and patent application publications, foreign patent documents, and non-patent literature, unless the applicant can justify with reasonable certainty that no references more pertinent than those already identified are likely to be found in the eliminated sources and includes such a justification with this statement;

5.2. be directed to the claimed invention and encompass all of the features of the claims, giving the claims the broadest reasonable expectation;

5.3. encompass the disclosed features that may be claimed.

6. must provide in support of the petition an accelerated examination support document.

An accelerated examination support document must include:

6.1. an information disclosure statement (IDS) in compliance with 37 CFR 1.98 citing each reference deemed most closely related to the subject matter of each of the claims;

6.2. an identification of all the limitations in the claims that are disclosed by the reference specifying where the limitation is disclosed in the cited reference;

6.3. a detailed explanation of how each of the claims are patentable over the references cited with particularity required by 37 CFR 1.111(b) and (c);

6.4. a concise statement of the utility of the invention as defined in each of the independent claims (unless the application is a design application);

6.5. a showing of where each limitation of the claims finds support under 35 USC 112, first paragraph, in the written description of the specification. If applicable, the showing must also identify: (1) each means- (or step) plus-function claim element that invokes consideration under 35 UDC 112, sixth paragraph; and (2) the structure, material, or acts in the specification that corresponds to each means- (or step) plus-function claim element that invokes consideration under 35 UDC 112, sixth paragraph; if the application claims the benefit of one or more applications under title 35, United States Code, the showing must also include where each limitation of the claims finds support under 35 USC 112, first paragraph, in each such application in which such supports exists;

6.6. an identification of any cited references that may be disqualified under 35 USC 103(c).

REVIEW OF FACTS

The petition fails to comply with condition I.3, above.

Because the application was filed with a defective specification, the application is considered to not be in condition to be examined as evidenced by the Notice to File Corrected Application Papers dated August 22, 2008.

Therefore, the petition fails to meet the required conditions to be accorded special status under the accelerated examination procedure. Given the above failure of filing a complete application, which cannot now be remedied, the petition has not been further reviewed on the merits.

DECISION

For the above-stated reasons, the petition is **DENIED**. The application will therefore be taken up by the examiner for action in its regular turn. Further petitions for accelerated examination in this application will not be entertained.

Any inquiry regarding this decision should be directed to Steven N. Meyers, Quality Assurance Specialist, at (571) 272-6611.

Steven N. Meyers,
Quality Assurance Specialist
Technology Center 3600

Sm/sm: 8/29/08

UNITED STATES PATENT AND TRADEMARK OFFICE

Commissioner for Patents
United States Patent and Trademark Office
P.O. Box 1450
Alexandria, VA 22313-1450
www.uspto.gov

MCANDREWS HELD & MALLOY, LTD
500 WEST MADISON STREET
SUITE 3400
CHICAGO IL 60661

COPY MAILED

OCT 23 2009

OFFICE OF PETITIONS

In re Application of	:	
Himmelright et al.	:	
Application No. 12/192673	:	
Filing or 371(c) Date: 08/15/2008	:	
Attorney Docket Number:	:	
19014US02	:	ON PETITION

This is in response to the Petition to Waive Inventor Signature Under 37 CFR § 1.47(a), filed July 6, 2009, and Petition to Supplement Petition to Waive Inventor Signature Under 37 CFR § 1.47(a) and to Supplement Response to Notice of Missing parts which Accompanied Petition to Revive Application, filed July 8, 2009, including an oath/declaration executed by the previously nonsigning inventor.

The Declaration has been entered and made of record.

In view of the joinder of the inventor, further consideration under 37 CFR 1.47(a) is not necessary and the Petition is considered to be moot. This application does not have any Rule 1.47(a) status and no such status should appear on the file wrapper. This application need not be returned to this Office for further consideration under 37 CFR 1.47(a).

The petition fee submitted July 8, 2009 is unnecessary and has been refunded to petitioner's deposit account as authorized in the present petition.

This application is being referred to the Office of Patent Application Processing for continued processing in the normal course of business.

Telephone inquiries related to this decision may be directed to the undersigned at (571) 272-3232.

/Derek L. Woods/
Derek L. Woods
Attorney
Office of Petitions

UNITED STATES PATENT AND TRADEMARK OFFICE

Commissioner for Patents
United States Patent and Trademark Office
P.O. Box 1450
Alexandria, VA 22313-1450
www.uspto.gov

MCANDREWS HELD & MALLOY, LTD
500 WEST MADISON STREET
SUITE 3400
CHICAGO IL 60661

MAILED

OCT 23 2009

OFFICE OF PETITIONS

In re Application of	:	
Himmelright et al.	:	
Application No. 12/192673	:	
Filing or 371(c) Date: 08/15/2008	:	
Attorney Docket Number:	:	
19014US02	:	ON PETITION

This is a decision on the Petition to Revive an Unintentionally Abandoned Application Under 37 CFR 1.137(b), filed July 6, 2009.

This Petition is hereby **granted**.

The above-identified application became abandoned for failure to timely and properly reply to the Notice to File Missing Parts of Nonprovisional Application ("Notice"), mailed August 26, 2008. The Notice set a two (2) month period for reply. Extensions of time were available under 37 CFR 1.136(a). No response having been received, the application became abandoned October 29, 2008. A Notice of Abandonment was mailed May 4, 2009.

Applicant files the present petition and response to the Notice. The petition satisfies the conditions for revival pursuant to the provisions of 37 CFR 1.137(b) in that the petition includes (1) the reply; (2) the petition fee; and (3) the required statement of unintentional delay. Accordingly, the reply is accepted as having been unintentionally delayed.

This application is being referred to the Office of Patent Application Processing ("OPAP") for processing of the reply to the Notice, including the properly signed oath/declaration filed July 8, 2009, in due course.

Telephone inquiries concerning this decision should be directed to the undersigned at (571) 272-3232.

/Derek L. Woods/
Derek L. Woods
Attorney
Office of Petitions

UNITED STATES PATENT AND TRADEMARK OFFICE

Commissioner for Patents
United States Patent and Trademark Office
P.O. Box 1450
Alexandria, VA 22313-1450
www.uspto.gov

MAIL

JAN 2 6 2009

DIRECTOR'S OFFICE
TECHNOLOGY CENTER 2600

MAIL

JAN 2 4 2009

DIRECTOR'S OFFICE
TECHNOLOGY CENTER 2600

GREENBLUM & BERNSTEIN, P.L.C.
1950 ROLAND CLARKE PLACE
RESTON VA 20191

In re Application of:
SIMMONDS, TREVOR, et al.
Serial No.: 12/192,724
Filed: August 15, 2008

Title: **METHOD FOR PRINTING ONTO COLOURED SUBSTRATES**

DECISION ON PETITION TO MAKE SPECIAL FOR NEW APPLICATION UNDER 37 C.F.R. § 1.102 & M.P.E.P. § 708.02

This is a decision on the petition filed on August 15, 2008 to make the above-identified application special for accelerated examination procedure under 37 C.F.R. § 1.102(d).

The petition to make the application special is **DENIED**.

REGULATION AND PRACTICE

To be eligible for accelerated examination under 37 C.F.R. § 1.102(d) and pursuant to the "Change to Practice for Petitions in Patent Applications to Make Special and for Accelerated Examination" published in the Federal Register on June 26, 2006 (71 Fed. Reg. 36323), the following conditions must be satisfied:

1. The application must be a non-reissue utility or design application filed under 37 CFR 1.111(a);
2. The application, the petition and the required fees must be filed electronically using the USPTO's electronic filing system (EFS), or EFS-web; if not filed electronically, a statement asserting that EFS and EFS-web were not available during the normal business hours;
3. The application, at the time of filing, must be complete under 37 CFR 1.51 and in condition for examination;
4. The application must contain three or fewer independent claims and twenty or fewer total claims and the claims must be directed to a single invention.

The application as filed is not eligible for accelerated examination under 37 C.F.R. § 1.102(d) because the application, at the time of filing, was not complete. A "Notice to File Corrected Application Papers" was mailed on August 27, 2008.

Therefore, the petition is denied because the application was not complete at the time of filing as per item 3 above. The application will be taken up by the examiner for action in its regular turn.

Any inquiry regarding this decision should be directed to Ken Wieder, Quality Assurance Specialist, at (571) 272-2986.

Kenneth A. Wieder
Quality Assurance Specialist
Technology Center 2600
Communications

UNITED STATES PATENT AND TRADEMARK OFFICE

Commissioner for Patents
United States Patent and Trademark Office
P.O. Box 1450
Alexandria, VA 22313-1450
www.uspto.gov

AKERMAN SENTERFITT
P.O. BOX 3188
WEST PALM BEACH FL 33402-3188

COPY MAILED

OCT 26 2009

OFFICE OF PETITIONS

In re Application of	:	
Douglas C. Hutchinson	:	
Application No. 12/192,726	:	DECISION ON PETITION
Filed: August 15, 2008	:	TO WITHDRAW
Attorney Docket No. **10030-1 (215151)**	:	FROM RECORD

This is a decision on the Request to Withdraw as attorney or agent of record under 37 CFR § 1.36(b), filed September 15, 2009.

The request is **APPROVED**.

A grantable request to withdraw as attorney/agent of record must be signed by every attorney/agent seeking to withdraw or contain a clear indication that one attorney is signing on behalf of another/others.

The request was signed by Peter A. Chiabolti on behalf of all attorneys of record who are associated with the Customer No. 30448.

All attorneys/agents associated with Customer No. 30448 have been withdrawn.

Applicant is reminded that there is no attorney of record at this time.

All future correspondence will be directed to the first named inventor Douglas C. Hutchinson at the address list below.

There is an outstanding Office action mailed August 25, 2009, that requires a reply from the applicant.

Telephone inquiries concerning this decision should be directed to the undersigned at 571-272-4584.

JoAnne Burke
Petitions Examiner
Office of Petitions

cc: Douglas C. Hutchinson
9480 South Military Trail, #4D
Boynton Beach, FL 33436

UNITED STATES PATENT AND TRADEMARK OFFICE

UNITED STATES DEPARTMENT OF COMMERCE
United States Patent and Trademark Office
Address: COMMISSIONER FOR PATENTS
P.O. Box 1450
Alexandria, Virginia 22313-1450
www.uspto.gov

APPLICATION NUMBER	FILING OR 371(C) DATE	FIRST NAMED APPLICANT	ATTY. DOCKET NO./TITLE
12/192,726	08/15/2008	Douglas C. Hutchinson	10030-1 (215151)

CONFIRMATION NO. 3335

POWER OF ATTORNEY NOTICE

30448
AKERMAN SENTERFITT
P.O. BOX 3188
WEST PALM BEACH, FL 33402-3188

OC000000038455640

Date Mailed: 10/26/2009

NOTICE REGARDING CHANGE OF POWER OF ATTORNEY

This is in response to the Power of Attorney filed 09/15/2009.

- The withdrawal as attorney in this application has been accepted. Future correspondence will be mailed to the new address of record. 37 CFR 1.33.

/jlburke/

Office of Data Management, Application Assistance Unit (571) 272-4000, or (571) 272-4200, or 1-888-786-0101

UNITED STATES PATENT AND TRADEMARK OFFICE

Commissioner for Patents
United States Patent and Trademark Office
P.O. Box 1450
Alexandria, VA 22313-1450
www.uspto.gov

FULBRIGHT & JAWORSKI L.L.P
2200 ROSS AVENUE
SUITE 2800
DALLAS TX 75201-2784

COPY MAILED

SEP 09 2008

In re Application of	:	
Athena A. Smyros, et al.	:	
Application No. 12/192,775	:	DECISION ON PETITION
Filed: August 15, 2008	:	TO MAKE SPECIAL UNDER
Attorney Docket No. 72880/P002US/10802385	:	37 CFR 1.102(c)(1)
	:	

This is a decision on the petition under 37 CFR 1.102(c)(1), filed August 15, 2008, to make the above-identified application special based on applicant's age as set forth in M.P.E.P. § 708.02, Section IV.

The petition is **GRANTED**.

A grantable petition to make an application special under 37 CFR 1.102(c)(1) and MPEP § 708.02, Section IV: Applicant's Age must be accompanied by evidence showing that at least one of the applicants is 65 years of age, or more, such as a birth certificate or a statement by applicant. No fee is required

The instant petition includes a copy of the applicant's driver's license proving that he is 65 years of age or older. Accordingly, the above-identified application has been accorded "special" status.

Telephone inquiries concerning this decision should be directed to Terri Williams at 571-272-2991.

All other inquiries concerning either the examination or status of the application should be directed to the Technology Center.

The application is being forwarded to the Technology Center Art Unit 2161 for action on the merits commensurate with this decision.

Terri Williams

Terri Williams
Petitions Examiner
Office of Petitions

UNITED STATES PATENT AND TRADEMARK OFFICE

UNITED STATES DEPARTMENT OF COMMERCE
United States Patent and Trademark Office
Address: COMMISSIONER FOR PATENTS
P.O. Box 1450
Alexandria, Virginia 22313-1450
www.uspto.gov

APPLICATION NO.	FILING DATE	FIRST NAMED INVENTOR	ATTORNEY DOCKET NO.	CONFIRMATION NO.
12/192,784	08/15/2008	Dieter SCHATEIKIS	029310.60625US	3460

7590 11/18/2009
CROWELL & MORING LLP
INTELLECTUAL PROPERTY GROUP
P.O. BOX 14300
WASHINGTON, DC 20044-4300

EXAMINER

ART UNIT	PAPER NUMBER
3761	

MAIL DATE	DELIVERY MODE
11/18/2009	PAPER

DECISION GRANTING PETITION UNDER 37 CFR 1.138(d)

The declaration of express abandonment is recognized

This is in response to the petition under 37 CFR 1.138(d), requesting for a refund of any previously paid search fee and excess claims fee in the above-identified application.

The petition is granted.

The express abandonment is recognized. Any previously paid search fee and excess claims fee are hereby refunded.

Telephone inquiries should be directed to the Office of Data Management at (571) 272-4200.

Nioni Farmer

Patent Publication Branch
Office of Data Management

Refund Ref:
11/19/2009 0030376946

Credit Card Refund Total: $1010.00

Pa exp.: XX/XXXXXXXX100:

Adjustment date: 11/19/2009 NFARMER
08/18/2008 INTEFSW 00002551 12192784
02 FC:1111 -510.00 OP
04 FC:1202 -500.00 OP

FORM PET651G (Rev. 08/07)

UNITED STATES PATENT AND TRADEMARK OFFICE

Commissioner for Patents
United States Patent and Trademark Office
P.O. Box 1450
Alexandria, VA 22313-1450
www.uspto.gov

MAILED

SEP 09 2008

Technology Center 2100

SHIMOKAJI & ASSOCIATES, P.C.
8911 RESEARCH DRIVE
IRVINE CA 92618

In re Application of: Hisashi KASHIMA.
Application No. 12/192,792
Filed: August 15, 2008
For: SYSTEM FOR SUPPORTING USER'S BEHAVIOR

DECISION ON REQUEST TO PARTICIPATE IN PATENT PROSECUTION HIGHWAY PILOT PROGRAM AND PETITION TO MAKE SPECIAL UNDER 37 CFR 1.102(d)

This is a decision on the request to participate in the Patent Prosecution Highway (PPH) program and the petition under 37 CFR 1.102(d), filed August 20, 2008, to make the above-identified application special.

The request and petition are **GRANTED**.

A grantable request to participate in the PPH pilot program and petition to make special require:

(1) The U.S. application must validly claim priority under 35 U.S.C. 119(a) to one or more applications filed in the JPO;

(2) Applicant must submit a copy of the allowable/patentable claim(s) from the JPO application(s) along with an English translation thereof and a statement that the English translation is accurate;

(3) All the claims in the U.S. application must sufficiently correspond or be amended to sufficiently correspond to the allowable/patentable claim(s) in the JPO application(s);

(4) Examination of the U.S. application has not begun;

(5) Applicant must submit a copy of all the office actions from each of the JPO application(s) containing the allowable/patentable claim(s) along with an English translation thereof and a statement that the English translation is accurate;

(6) Applicant must submit an IDS listing the documents cited by the JPO examiner in the JPO office action along with copies of documents except U.S. patents or U.S. patent application publications; and

(7) The required petition fee under 37 CFR 1.17(h).

The request to participate in the PPH pilot program and petition are found to comply with the above requirements. Accordingly, the above-identified application has been accorded "special" status.

Telephone inquiries concerning this decision should be directed to Mano Padmanabhan at 571-272-4210.

All other inquiries concerning the examination or status of the application is accessible in the PAIR system at http://www.uspto.gov/ebc/index.html.

The application is being forwarded to the examiner for action on the merits commensurate with this decision.

/Mano Padmanabhan/

Mano Padmanabhan
Quality Assurance Specialist, Technology Center 2100, Workgroup 2180
571-272-4210

UNITED STATES PATENT AND TRADEMARK OFFICE

Commissioner for Patents
United States Patent and Trademark Office
P.O. Box 1450
Alexandria, VA 22313-1450
www.uspto.gov

FULBRIGHT & JAWORSKI L.L.P
2200 ROSS AVENUE
SUITE 2800
DALLAS TX 75201-2784

COPY MAILED

SEP 15 2008

In re Application of	:	
ATHENA A. SMYROS et al.	:	
Application No. 12/192,794	:	DECISION ON PETITION
Filed: August 15, 2008	:	TO MAKE SPECIAL UNDER
Attorney Docket No. **72880/P003US/10810225**	:	37 CFR 1.102(c)(1)
	:	

This is a decision on the petition under 37 CFR 1.102(c)(1), filed August 15, 2008, to make the above-identified application special based on applicant's age as set forth in M.P.E.P. § 708.02, Section IV.

The petition is **GRANTED**.

A grantable petition to make an application special under 37 CFR 1.102(c)(1) and MPEP § 708.02, Section IV: Applicant's Age, must be accompanied by evidence showing that at least one of the applicants is 65 years of age, or more, such as a birth certificate or a statement by applicant. No fee is required.

The evidence submitted with the instant petition is a copy of Constantine Smyros's driver's license indicating that she is at least 65 years of age. Accordingly, the above-identified application will be accorded "special" status.

Telephone inquiries concerning this decision should be directed to Tredelle Jackson at 571-272-2783.

All other inquiries concerning either the examination or status of the application should be directed to the Technology Center.

This application is being referred to the Office of Initial Patent Examination for processing.
This application will be accorded "special" status when pre-examination processing is done.

Tredelle D. Jackson
Paralegal Specialist
Office of Petitions

UNITED STATES PATENT AND TRADEMARK OFFICE

Commissioner for Patents
United States Patent and Trademark Office
P.O. Box 1450
Alexandria, VA 22313-1450
www.uspto.gov

SNELL & WILMER LLP (OC)
600 ANTON BOULEVARD, SUITE 1400
COSTA MESA CA 92626

COPY MAILED
SEP 25 2008

In re Application of	:	
William J. THOMPSON	:	
Application No. 12/192,811	:	DECISION ON PETITION
Filed: August 15, 2008	:	TO MAKE SPECIAL UNDER
Attorney Docket No. 42524.1717	:	37 CFR 1.102(c)(1)
	:	

This is a decision on the petition under 37 CFR 1.102(c)(1), filed August 15, 2008, to make the above-identified application special based on applicant's age as set forth in M.P.E.P. § 708.02, Section IV.

The petition is **GRANTED**.

A grantable petition to make an application special under 37 CFR 1.102(c)(1) and MPEP § 708.02, Section IV: Applicant's Age must be accompanied by evidence showing that at least one of the applicants is 65 years of age, or more, such as a birth certificate or a statement by applicant. No fee is required

The instant petition includes a declaration statement by applicant. Accordingly, the above-identified application has been accorded "special" status.

Telephone inquiries concerning this decision should be directed to the undersigned at 571-272-6735.

All other inquiries concerning either the examination or status of the application should be directed to the Technology Center.

The application is being forwarded to Technology Center Art Unit 3721 for action on the merits commensurate with this decision.

Diane Goodwyn
Petitions Examiner
Office of Petitions

UNITED STATES PATENT AND TRADEMARK OFFICE

UNITED STATES DEPARTMENT OF COMMERCE
United States Patent and Trademark Office
Address: COMMISSIONER FOR PATENTS
P.O. Box 1450
Alexandria, Virginia 22313-1450
www.uspto.gov

APPLICATION NO.	FILING DATE	FIRST NAMED INVENTOR	ATTORNEY DOCKET NO.	CONFIRMATION NO.
12/192,815	08/15/2008	Stephen L. Rush	1300.004	3512

54434 7590 09/10/2008
BOOTH UDALL, PLC
1155 W. Rio Salado Pkwy.
Suite 101
Tempe, AZ 85281

EXAMINER

ART UNIT	PAPER NUMBER
1632	

MAIL DATE	DELIVERY MODE
09/10/2008	PAPER

Please find below and/or attached an Office communication concerning this application or proceeding.

The time period for reply, if any, is set in the attached communication.

UNITED STATES PATENT AND TRADEMARK OFFICE

Commissioner for Patents
United States Patent and Trademark Office
P.O. Box 1450
Alexandria, VA 22313-1450
www.uspto.gov

SEP 1 0 2008

Booth Udall, PLC
1155 W. Rio Salado Parkway
Suite 101
Tempe, AZ 85281

In re Application of	:
Stephen L. Rush	: DECISION ON PETITION TO MAKE
Serial No.: 12/192,815	: SPECIAL FOR NEW APPLICATION
Filed: August 15, 2008	: UNDER 37 C.F.R. § 1.102 & M.P.E.P.
Attorney Docket No.: 1300.004	: § 708.02

This is a decision on the petition filed August 15, 2008, to make the above-identified application special for accelerated examination procedure under 37 C.F.R. § 1.102(d).

The petition to make the application special is **GRANTED**.

The application is eligible for accelerated examination and the petition complies with the conditions for granting the application special status pursuant to the "Change to Practice for Petitions in Patent Applications to Make Special and for Accelerated Examination" published June 26, 2006, in the Federal Register. (71 Fed. Reg. 36323).

The prosecution of the instant application will be conducted expeditiously according to the following guidelines.

1. The application will be docketed to an examiner and taken up for action within two weeks of the date of this decision.

2. Restriction Practice:
   If the examiner determines that the claims are not directed to a single invention, a telephone request to elect one single invention will be made pursuant to MPEP 812.01. As a prerequisite to the grant of this petition, the applicant has agreed to make an oral election, by telephone, without traverse. If the applicant refuses to make an election without traverse, or the examiner cannot reach the applicant after a reasonable effort, the examiner will treat the first claimed invention (invention defined by claim 1) as having being constructively elected without traverse for examination.

3. Office action:
   If it is determined that, after appropriate consultation, there is a potential rejection or any other issue to be addressed, the examiner will telephone the applicant and arrange an interview to discuss and resolve the issue. An Office action, other than a Notice of Allowance and Fee(s) Due (Notice of Allowance), will not be issued unless either: 1) an interview was conducted but did not result in an agreement that places the application in condition for allowance, or, 2) a determination is made that an interview would be unlikely to result in the application being placed in condition for allowance, and 3) an internal conference has been held to review any rejection of any claim.

4. Time for Reply:
   An Office action other than a Notice of Allowance or a Final Office action will set a shortened statutory period of one month or thirty days, whichever is longer, for reply with no extension of time available under 37 CFR 1.136(a). Failure to timely file a reply within this non-extendible period for reply will result in the abandonment of the application.

5. Reply by Applicant:
   A timely reply to an Office action other than the Notice of Allowance must be submitted electronically via EFS or EFS-web and limited to addressing the rejections, objections and requirement made. Any amendment that attempts to: 1) add claims which would result in more than three pending independent claims or more than twenty pending total claims; 2) present claims not encompassed by the pre-examination search or an updated accelerated examination support document; or 3) present claims that are directed a non-elected invention or an invention other than that previously claimed and examined in the application, will be treated as not fully responsive and will not be entered.

   For any amendment to the claims (including any new claim) that is not encompassed by the accelerated examination support document, applicant must provide an updated accelerated examination support document that encompasses the amended or new claims at the time of filing of the amendment.

   To proceed expeditiously with the examination, it is recommended that a reply with amendments made to any claim or with any new claim being added be accompanied by an updated accelerated examination support document or a statement explaining how the amended or new claim is supported by the original accelerated examination support document.

6. Information Disclosure Statement (IDS):
   Any IDS filed during prosecution must be submitted electronically via EFS or EFS-web, accompanied by an updated accelerated examination support document, and be in compliance with 37 CFR 1.97 and 1.98.

7. Post-Allowance Processing:
   To expedite processing of the allowed application into a patent, the applicant must: 1) pay the required fees within one month of the date of the Notice of Allowance, and 2) not file any post allowance papers not required by the Office. In no event may the issue fee be paid and accepted later than three months from the date of the Notice of Allowance.

8. After-Final and Appeal Procedures:
   To expedite prosecution, after receiving the Final Office action, applicant must: 1) promptly file a Notice of Appeal, an Appeal Brief and Appeal fees; and 2) not request a pre-appeal brief conference.

   Any amendment, affidavit or other evidence filed after Final Office action must comply with applicable rules and the requirements outlined in numbered paragraphs 5 and 6 above.

   On appeal, the application will proceed according to normal appeal procedures. After appeal, the application will again be treated special.

9. Proceedings Outside the Normal Examination Process:
   If the application becomes involved in a proceeding that is outside the normal examination process (e.g., a secrecy order, national security review, interference proceeding, petitions under 37 CFR 1.181, 182 or 183), the application will be treated special before and after such proceeding.

10. Final Disposition:
    The twelve month goal of this accelerated examination procedure ends with a final disposition. The mailing of a Final Office action, a Notice of Allowance, the filing of a Notice of Appeal, or the filing of a Request for Continued Examination (RCE) is the final disposition.

If, during prosecution, a paper is not filed electronically using EFS-web, a reply is filed but is not fully responsive, the application is involved in an appeal, or a proceeding outside normal examination process, the application will still be examined expeditiously, however, the final disposition may occur more than twelve months from the filing of the application.

Any inquiry regarding this decision should be directed to Dave Nguyen, TC1600 Quality Assurance Specialist, at (571) 272-0731.

Dave T. Nguyen
TC1600 Quality Assurance Specialist
Technology Center 1600

UNITED STATES PATENT AND TRADEMARK OFFICE

Commissioner for Patents
United States Patent and Trademark Office
P.O. Box 1450
Alexandria, VA 22313-1450
www.uspto.gov

FULBRIGHT & JAWORSKI L.L.P
2200 ROSS AVENUE
SUITE 2800
DALLAS TX 75201-2784

COPY MAILED
SEP 15 2008

In re Application of	:	
ATHENA A. SMYROS et al.	:	
Application No. 12/192,834	:	DECISION ON PETITION
Filed: August 15, 2008	:	TO MAKE SPECIAL UNDER
Attorney Docket No. **72880/P004US/10810226**	:	37 CFR 1.102(c)(1)
	:	

This is a decision on the petition under 37 CFR 1.102(c)(1), filed August 15, 2008, to make the above-identified application special based on applicant's age as set forth in M.P.E.P. § 708.02, Section IV.

The petition is **GRANTED**.

A grantable petition to make an application special under 37 CFR 1.102(c)(1) and MPEP § 708.02, Section IV: Applicant's Age, must be accompanied by evidence showing that at least one of the applicants is 65 years of age, or more, such as a birth certificate or a statement by applicant. No fee is required.

The evidence submitted with the instant petition is a copy of Constantine Smyros's driver's license indicating that she is at least 65 years of age. Accordingly, the above-identified application will be accorded "special" status.

Telephone inquiries concerning this decision should be directed to Tredelle Jackson at 571-272-2783.

All other inquiries concerning either the examination or status of the application should be directed to the Technology Center.

This application is being referred to the Office of Initial Patent Examination for processing.
This application will be accorded "special" status when pre-examination processing is done.

Tredelle D. Jackson
Paralegal Specialist
Office of Petitions

UNITED STATES PATENT AND TRADEMARK OFFICE

Commissioner for Patents
United States Patent and Trademark Office
P.O. Box 1450
Alexandria, VA 22313-1450
www.uspto.gov

FULBRIGHT & JAWORSKI L.L.P
2200 ROSS AVENUE
SUITE 2800
DALLAS, T X 75201-2784

COPY MAILED
SEP 2 6 2008

In re Application of	:	
Athena A. Smyros, et al.	:	
Application No. 12/192,846	:	DECISION ON PETITION
Filed: August 15, 2008	:	TO MAKE SPECIAL UNDER
Attorney Docket No. 72880/P005US/10810227	:	37 CFR 1.102(c)(1)
	:	

This is a decision on the petition under 37 CFR 1.102(c)(1), filed August 15, 2008, to make the above-identified application special based on applicant's age as set forth in M.P.E.P. § 708.02, Section IV.

The petition is **GRANTED**.

A grantable petition to make an application special under 37 CFR 1.102(c)(1) and MPEP § 708.02, Section IV: Applicant's Age must be accompanied by evidence showing that at least one of the applicants is 65 years of age, or more, such as a birth certificate or a statement by applicant. No fee is required

The instant petition includes a copy o applicant's birth certificate. Accordingly, the above-identified application has been accorded "special" status.

Telephone inquiries concerning this decision should be directed to undersigned at 571-272-1642.

All other inquiries concerning either the examination or status of the application should be directed to the Technology Center.

The application is being forwarded to the Technology Center Art Unit 2161 for action on the merits commensurate with this decision.

April M. Wise
Petitions Examiner
Office of Petitions

UNITED STATES PATENT AND TRADEMARK OFFICE

Commissioner for Patents
United States Patent and Trademark Office
P.O. Box 1450
Alexandria, VA 22313-1450
www.uspto.gov

FLIESLER MEYER, LLP
650 CALIFORNIA STREET
14TH FLOOR
SAN FRANCISCO, CA 94108

MAILED

AUG 19 2009

OFFICE OF PETITIONS

In re Application of
Daniel Thiel
Application No. 12/192,859
Filed: August 15, 2008
Attorney Docket No. NODE-01002US1

DECISION ON PETITION TO WITHDRAW FROM RECORD

This is a decision on the Request to Withdraw as attorney or agent under 37 CFR § 1.36(b) or 37 CFR § 10.40 filed June 26, 2009.

The request is **APPROVED**.

A review of the file record indicates that Sheldon R. Meyer and the Attorneys associated with Customer Number 23910: (1) does not have power of attorney in this patent application; but (2) has been employed or otherwise engaged in the proceedings in this patent application. In view of the present decision, Sheldon R. Meyer and the Attorneys associated with Customer Number 23910 have been withdrawn from the present application and may not prepare or submit papers under 37 CFR § 1.34, or correspond in any manner in this application unless appointed in an acceptable power of attorney under 37 CFR § 1.32(b).

The request to change the correspondence address of record has been accepted. All future communications from the Office will be directed to the address below until otherwise properly notified by the applicant.

Applicant is reminded that there are no Attorneys of record at this time.

This application file is being referred to the Office of Application Processing for processing in accordance with this decision.

Telephone inquiries concerning this decision should be directed to the undersigned at 571-272-3226.

Andrea Smith
Petitions Examiner
Office of Petitions

cc: Daniel Thiel
100 N. Wiget Lane, Suite 26
Walnut Creek, CA 94598

UNITED STATES PATENT AND TRADEMARK OFFICE

Commissioner for Patents
United States Patent and Trademark Office
P.O. Box 1450
Alexandria, VA 22313-1450
www.uspto.gov

FULBRIGHT & JAWORSKI L.L.P
2200 ROSS AVENUE
SUITE 2800
DALLAS TX 75201-2784

COPY MAILED

SEP 09 2008

In re Application of	:	
Athena A. Smyros, et al.	:	
Application No. 12/192,875	:	DECISION ON PETITION
Filed: August 15, 2008	:	TO MAKE SPECIAL UNDER
Attorney Docket No. 72880/P006US/10810228	:	37 CFR 1.102(c)(1)
	:	

This is a decision on the petition under 37 CFR 1.102(c)(1), filed August 15, 2008, to make the above-identified application special based on applicant's age as set forth in M.P.E.P. § 708.02, Section IV.

The petition is **GRANTED**.

A grantable petition to make an application special under 37 CFR 1.102(c)(1) and MPEP § 708.02, Section IV: Applicant's Age must be accompanied by evidence showing that at least one of the applicants is 65 years of age, or more, such as a birth certificate or a statement by applicant. No fee is required

The instant petition includes a copy of the applicant's driver's license proving that he is 65 years of age or older. Accordingly, the above-identified application has been accorded "special" status.

Telephone inquiries concerning this decision should be directed to Terri Williams at 571-272-2991.

All other inquiries concerning either the examination or status of the application should be directed to the Technology Center.

The application is being forwarded to the Technology Center Art Unit 2161 for action on the merits commensurate with this decision.

Terri Williams

Terri Williams
Petitions Examiner
Office of Petitions

UNITED STATES PATENT AND TRADEMARK OFFICE

Commissioner for Patents
United States Patent and Trademark Office
P.O. Box 1450
Alexandria, VA 22313-1450
www.uspto.gov

FISH & ASSOCIATES, PC
ROBERT D. FISH
2603 MAIN STREET
SUITE 1050
IRVINE CA 92614-6232

COPY MAILED
SEP 25 2008

In re Application of	:	
ADDINK, John	:	
Application No. 12/192,888	:	DECISION ON PETITION
Filed: August 15, 2008	:	TO MAKE SPECIAL UNDER
Attorney Docket No. **100302.0009US5**	:	37 CFR 1.102(c)(1)
	:	

This is a decision on the petition under 37 CFR 1.102(c)(1), filed August 15, 2008, to make the above-identified application special based on applicant's age as set forth in M.P.E.P. § 708.02, Section IV.

The petition is **GRANTED**.

A grantable petition to make an application special under 37 CFR 1.102(c)(1) and MPEP § 708.02, Section IV: Applicant's Age must be accompanied by evidence showing that at least one of the applicants is 65 years of age, or more, such as a birth certificate or a statement by applicant. No fee is required

The instant petition includes a statement by John Addink attesting that he is over 65 years of age. Accordingly, the above-identified application has been accorded "special" status.

Telephone inquiries concerning this decision should be directed to Michelle R. Eason at 571-272-4231.

All other inquiries concerning either the examination or status of the application should be directed to the Technology Center.

This application is being referred to the Office of Patent Application Processing to await a reply to the Notice to File Missing Parts (Notice) mailed August 28, 2008. This application will be accorded "special" status when pre-examination processing is done.

Michelle R. Eason

Michelle R. Eason
Paralegal Specialist
Office of Petitions

UNITED STATES PATENT AND TRADEMARK OFFICE

Commissioner for Patents
United States Patent and Trademark Office
P.O. Box 1450
Alexandria, VA 22313-1450
www.uspto.gov

Blakely, Sokoloff, Taylor & Zafman LLP
1279 Oakmead Parkway
Sunnyvale, CA 94085-4040

In re Application of: Kazuki KUWAHARA
Application No. 12/192,893
Filed: August 15, 2008
For: BROADCAST RECEIVING APPARATUS AND BROADCAST RECEIVING METHOD

DECISION ON REQUEST TO PARTICIPATE IN PATENT PROSECUTION HIGHWAY PILOT PROGRAM AND PETITION TO MAKE SPECIAL UNDER 37 CFR 1.102(d)

MAIL

JUN 30 2009

DIRECTOR OFFICE
TECHNOLOGY CENTER 2600

This is a decision on the request to participate in the Patent Prosecution Highway (PPH) pilot program and the petition under 37 CFR 1.102(d), filed May 29, 2009, to make the above-identified application special.

The petition is **DISMISSED.**

A grantable request to participate in the PPH pilot program and petition to make special require:

(1) The U.S. application must validly claim priority under 35 U.S.C. 119(a) to one or more applications filed in the JPO;

(2) Applicant must submit a copy of the allowable/patentable claim(s) from the JPO application(s) along with an English translation thereof and a statement that the English translation is accurate;

(3) All the claims in the U.S. application must sufficiently correspond or be amended to sufficiently correspond to the allowable/patentable claim(s) in the JPO application(s);

(4) Examination of the U.S. application has not begun;

(5) Applicant must submit a copy of all the office actions from each of the JPO application(s) containing the allowable/patentable claim(s) along with an English translation thereof and a statement that the English translation is accurate;

(6) Applicant must submit an IDS listing the documents cited by the JPO examiner in the KIPO office action along with copies of documents except U.S. patents or U.S. patent application publications; and

(7) The required petition fee under 37 CFR 1.17(h)..

The request to participate in the PPH pilot program and petition failed:

1) item (2) above, since the applicants have failed to provide the allowable claims from the Japanese patent and only provided the translated version of the allowable claims.

2) item (5) above, because the applicant has failed to provide the JPO office action(s), translation(s) of the JPO office action(s) and certification of the accuracy of the translation.

3) item (6) above, because the applicant has failed to provide an IDS listing the references cited in the JPO office action(s) and copies of each reference cited therein.

4) item (7) above, because the applicant has failed to pay the required petition fee.

Accordingly, the Petition is **DISMISSED**.

Applicant is given a time period of ONE MONTH or THIRTY DAYS, whichever is longer, to correct the deficiencies. NO EXTENSION OF TIME UNDER 37 CFR 1.136 IS PERMITTED.

If the deficiencies are not corrected with the time period given, the application will await action in its regular turn.

Responses must be submitted by EFS-Web using the document description "Petition to make special under Pat Pros Hwy."

Telephone inquiries concerning this decision should be directed to Hassan Kizou at 571-272-3088

All other inquiries concerning the examination or status of the application is accessible in the PAIR system at http://www.uspto.gov/ebc/index.html.

Hassan Kizou
Quality Assurance Specialist
Technology Center 2400

UNITED STATES PATENT AND TRADEMARK OFFICE

UNITED STATES DEPARTMENT OF COMMERCE
United States Patent and Trademark Office
Address: COMMISSIONER FOR PATENTS
P.O. Box 1450
Alexandria, Virginia 22313-1450
www.uspto.gov

APPLICATION NO.	FILING DATE	FIRST NAMED INVENTOR	ATTORNEY DOCKET NO.	CONFIRMATION NO.
12/192,893	08/15/2008	Kazuki Kuwahara	8074P437	3684

8791 7590 07/27/2009
BLAKELY SOKOLOFF TAYLOR & ZAFMAN LLP
1279 OAKMEAD PARKWAY
SUNNYVALE, CA 94085-4040

EXAMINER
KOENIG, ANDREW Y

ART UNIT	PAPER NUMBER
2423	

MAIL DATE	DELIVERY MODE
07/27/2009	PAPER

Please find below and/or attached an Office communication concerning this application or proceeding.

The time period for reply, if any, is set in the attached communication.

UNITED STATES PATENT AND TRADEMARK OFFICE

Commissioner for Patents
United States Patent and Trademark Office
P.O. Box 1450
Alexandria, VA 22313-1450
www.uspto.gov

Blakely, Sokoloff, Taylor & Zafman LLP
1279 Oakmead Parkway
Sunnyvale, CA 94085-4040

In re Application of: Kazuki KUWAHARA
Application No. 12/192,893
Filed: August 15, 2008
For: BROADCAST RECEIVING APPARATUS AND BROADCAST RECEIVING METHOD

DECISION ON REQUEST TO PARTICIPATE IN PATENT PROSECUTION HIGHWAY PILOT PROGRAM AND PETITION TO MAKE SPECIAL UNDER 37 CFR 1.102(d)

MAILED

JUL 27 2009

DIRECTOR OFFICE
TECHNOLOGY CENTER 2400

This is a decision on the supplemental request to participate in the Patent Prosecution Highway (PPH) pilot program and the petition under 37 CFR 1.102(d), filed July 15, 2009, to make the above-identified application special.

The petition is **GRANTED.**

A grantable request to participate in the PPH pilot program and petition to make special require:

(1) The U.S. application must validly claim priority under 35 U.S.C. 119(a) to one or more applications filed in the JPO;

(2) Applicant must submit a copy of the allowable/patentable claim(s) from the JPO application(s) along with an English translation thereof and a statement that the English translation is accurate;

(3) All the claims in the U.S. application must sufficiently correspond or be amended to sufficiently correspond to the allowable/patentable claim(s) in the JPO application(s);

(4) Examination of the U.S. application has not begun;

(5) Applicant must submit a copy of all the office actions from each of the JPO application(s) containing the allowable/patentable claim(s) along with an English translation thereof and a statement that the English translation is accurate;

(6) Applicant must submit an IDS listing the documents cited by the JPO examiner in the KIPO office action along with copies of documents except U.S. patents or U.S. patent application publications; and

(7) The required petition fee under 37 CFR 1.17(h).

The supplemental request to participate in the PPH program and petition are found to comply with the above requirements. Accordingly, the above-identified application has been accorded "special" status.

The application is being forwarded to the examiner for action on the merits commensurate with this decision.

Telephone inquiries concerning this decision should be directed to Hassan Kizou at 571-272-3088

All other inquiries concerning the examination or status of the application is accessible in the PAIR system at http://www.uspto.gov/ebc/index.html.

Hassan Kizou
Quality Assurance Specialist
Technology Center 2400

UNITED STATES PATENT AND TRADEMARK OFFICE

UNITED STATES DEPARTMENT OF COMMERCE
United States Patent and Trademark Office
Address: COMMISSIONER FOR PATENTS
P.O. Box 1450
Alexandria, Virginia 22313-1450
www.uspto.gov

APPLICATION NO.	FILING DATE	FIRST NAMED INVENTOR	ATTORNEY DOCKET NO.	CONFIRMATION NO.
12/192,983	08/15/2008	Troy W. Glover	RPS920080181US1	3893

75339 7590 09/25/2008
PATENTS ON DEMAND, P.A.
4581 WESTON ROAD
SUITE 345
WESTON, FL 33331

EXAMINER

ART UNIT	PAPER NUMBER
2837	

MAIL DATE	DELIVERY MODE
09/25/2008	PAPER

Please find below and/or attached an Office communication concerning this application or proceeding.

The time period for reply, if any, is set in the attached communication.

UNITED STATES PATENT AND TRADEMARK OFFICE

Commissioner for Patents
United States Patent and Trademark Office
P.O. Box 1450
Alexandria, VA 22313-1450
www.uspto.gov

PATENTS ON DEMAND, P.A.
4581 WESTON ROAD
SUITE 345
WESTON, FL 33331

In re Application of: Troy W. Glover et al. Serial No.: 12/192,983 Filed: August 15, 2008 Attorney Docket No.: RPS920080181US1 Title: CONTROLLING THE SPEED OF COOLING FANS FOR MULTIPLE COMPUTER SYSTEMS BASED ON ALTITUDE/FLUID DENSITY MEASUREMENTS FROM A CENTRALIZED SENSOR	DECISION ON PETITION TO MAKE SPECIAL FOR NEW APPLICATION UNDER 37 C.F.R. § 1.102 & M.P.E.P. § 708.02

This is a decision on the petition filed on August 15, 2008 to make the above-identified application special for accelerated examination procedure under 37 C.F.R. § 1.102(d) and M.P.E.P. §708.02(a).

The petition to make the application special is **DISMISSED**.

REGULATION AND PRACTICE

A grantable petition to make special under 37 C.F.R. § 1.102(d), M.P.E.P. §708.02(a) and pursuant to the "Change to Practice for Petitions in Patent Applications to Make Special and for Accelerated Examination" published in the Federal Register on June 26, 2006 (71 Fed. Reg. 36323), must satisfy the following conditions:

I. Conditions Regarding the Application:

1. the application must be a non-reissue utility or design application filed under 37 CFR 1.111(a);
2. the application, the petition and the required fees must be filed electronically using the USPTO's electronic filing system (EFS), or EFS-web; if not filed electronically, a statement asserting that EFS and EFS-web were not available during the normal business hours.
3. at the time of filing, the application must be complete under 37 CFR 1.51 and in condition for examination;
4. the application must contain three or fewer independent claims and twenty or fewer total claims and the claims must be directed to a single invention.

II. Conditions Regarding the Petition:

The petition must:

1. be filed with the application;

2. include a statement that applicant agrees not to separately argue the patentability of any independent claim during any appeal in the application;

3. include a statement that applicant agrees to make an election without traverse in a telephone interview;

4. include a statement that applicant agrees to conduct such an interview when requested by the examiner; and

5. include a statement, made based on a good faith belief, that a preexamination search in compliance with the following requirements, was conducted, including an identification of the field of search by United States class and subclass, where applicable, and for database searches, the search logic or chemical structure or sequence used as a query, the name of the file(s) searched and the database service, and the date of the search.

The pre-examination search must:

5.1 involve U.S. patents and patent application publications, foreign patent documents, and non-patent literature, unless the applicant can justify with reasonable certainty that no references more pertinent than those already identified are likely to be found in the eliminated sources and includes such a justification with this statement;

5.2. be directed to the claimed invention and encompass all of the features of the claims, giving the claims the broadest reasonable interpretation; and

5.3. encompass the disclosed features that may be claimed.

6. must provide in support of the petition an accelerated examination support document. An accelerated examination support document must include:

6.1. an information disclosure statement (IDS) in compliance with 37 CFR 1.98 citing each reference deemed most closely related to the subject matter of each of the claims;

6.2. an identification of all the limitations in the claims that are disclosed by the reference specifying where the limitation is disclosed in the cited reference;

6.3. a detailed explanation of how each of the claims are patentable over the references cited with particularity required by 37 CFR 1.111(b) and (c);

6.4. a concise statement of the utility of the invention as defined in each of the independent claims (unless the application is a design application);

6.5. a showing of where each limitation of the claims finds support under 35 USC 112, first paragraph, in the written description of the specification. If applicable, the showing must also identify: (1) each means- (or step) plus-function claim element that invokes consideration under 35 USC 112, sixth paragraph; and (2) the structure, material, or acts in the specification that corresponds to each means- (or step) plus-function claim element that invokes consideration under 35 USC 112, sixth paragraph; if the application claims the benefit of one or more applications under title 35, United States Code, the showing must also include where each limitation of the claims finds support under 35 USC 112, first paragraph, in each such application in which such supports exists; and

6.6. an identification of any cited references that may be disqualified under 35 USC 103(c).

REVIEW OF FACTS

The application is eligible for the accelerated examination program as set forth in section I above.

The petition meets conditions II.1 through II.4; conditions II.6.1 and II.6.4 through II.6.6 above. However, the petition does not meet conditions II.5, II.6.2 and II.6.3 above.

Regarding the conditions set forth in II.5.1 above, the field of search should properly include Class 318, subclass 268, to cover the broad subject matter being claimed.

Regarding the condition set forth in II.6.2 above, the support document is required to identify all the limitations in the claims that are disclosed by the reference specifying where the limitation is disclosed in each cited reference. The support document, however, fails to adequately specify where the claim limitations are disclosed in the cited reference. For example, the support document cites Veitenhansl et al. (German Patent DE 4107481) with respect to claim 1, as teaching a method comprising "determining a fluid density by a ... sensor ... at least one computer system, wherein said centralized sensor is external to each of the at least one computer system, ... (Figure; Abstract)." However, it is not apparent from either the figure or the abstract that Veitenhansl et al. discloses either determining a fluid density by a sensor or at least one computer system. Consequently, the support document fails to specify where the claim limitations are disclosed in the cited reference.

Regarding the condition set forth in II.6.3 above, the petition fails to include a detailed explanation of how each of the claims are patentable over the cited references with the particularity required by 37 C.F.R. §1.111(b) and (c). The "Detailed Explanation of Patentability" does not indicate with sufficient specificity how each of the claims is patentable over the references. Petitioner asserts that all of the applicable references "fail to teach, suggest, or describe at least using a centralized sensor to provide fluid density readings used by a set of devices in an enclosed region (such as a server room)." The apparatus as broadly recited in claim 1 is not limited to "fluid density readings used by a set of devices in an enclosed region." Rather claim 1 recites "said enclosed area comprising at least one computer system." Consequently, the claim reads on a ***single*** device (computer system) in an enclosed area. Petitioner asserts that all of the applicable references fail to "teach that the controlled set of devices include other functionally independent computing devices (that generate heat) for which the cooling applies (e.g., "configured to house at least one computer subsystem")." However, claim 1 recites "wherein each computer system comprises at least one computer subsystem." Consequently, the claim reads on a ***single*** device (computer subsystem) in an enclosed area and does not provide adequate support for "other functionally independent computing devices." Consequently, applicant's explanation of patentability is more specific than the invention broadly claimed. Petitioner further asserts with respect to claim 1 that the prior art references use an ***internal*** altitude sensor to affect fan speed whereas the claim recites "***a centralized sensor*** external to each of the at least one computer system, wherein each computer system configured to house at least one computer subsystem." However, since claim 1 reads on a ***single*** computer system comprising a ***single*** computer subsystem, it is not evident that there is adequate support

in the claim for distinguishing between an ***internal*** sensor of a system being controlled and a ***centralized*** sensor ***external*** to the system. Consequently, further explanation is required in order to provide a detailed explanation of patentability with the particularity required by 37 C.F.R. §1.111(b) and (c). With regard to June (U.S. Appl. No. 11/759,681), petitioner asserts that "the present application provides using a shared sensor in an area having many systems and subsystems (different racks and servers in the racks within a server room), where U.S. Application Number 11/759,681 uses a shared sensor for a system having multiple subsystems (such as a single rack with numbers rack mounted components - see claim 6)." However, since claim 1 reads on a ***single*** system comprising a ***single*** subsystem in an enclosed area, the present invention is not limited to "an area having many systems and subsystems." Consequently, petitioner's explanation is more specific than the invention broadly claimed. Furthermore, the distinction between "many systems and subsystems" and "a system having multiple subsystems" is less than evident. Indeed, it is not clear why "a single rack with numbers [sic] rack mounted components" neither anticipates nor renders obvious "many systems and subsystems." Accordingly, further explanation is required in order to provide a detailed explanation of patentability with the particularity required by 37 C.F.R. §1.111(b) and (c).

Accordingly, the petition fails to meet conditions II.5, II.6.2 and II.6.3 for the reasons cited above.

DECISION

For the above-stated reasons, the petition is **dismissed**. The application will therefore be taken up by the examiner for action in its regular turn.

Petitioner is given a single opportunity to perfect the petition. Any request for reconsideration of this decision must be submitted within 1 (one) month or 30 (thirty) days, whichever is longer, (no extension of time under 37 CFR 1.136(a) is available) from the date of this decision in order to be considered timely. Any request for reconsideration must address the deficiencies indicated above.

Petitioner is reminded that, upon granting of the special status of the application on request for reconsideration, the application will be processed expeditiously. However, due to the dismissal of the instant petition, examination may not be completed within twelve months of the filing date of the application.

Any inquiry regarding this decision should be directed to the undersigned at (571) 272-1638.

Edward Westin

Edward Westin, Quality Assurance Specialist
Technology Center 2800 - Semiconductors,
Electrical & Optical Systems & Components
EW/JC

UNITED STATES PATENT AND TRADEMARK OFFICE

UNITED STATES DEPARTMENT OF COMMERCE
United States Patent and Trademark Office
Address: COMMISSIONER FOR PATENTS
P.O. Box 1450
Alexandria, Virginia 22313-1450
www.uspto.gov

APPLICATION NO.	FILING DATE	FIRST NAMED INVENTOR	ATTORNEY DOCKET NO.	CONFIRMATION NO.
12/192,983	08/15/2008	Troy W. Glover	RPS920080181US1	3893

75339 7590 12/09/2008
PATENTS ON DEMAND, P.A.
4581 WESTON ROAD
SUITE 345
WESTON, FL 33331

EXAMINER
RO, BENTSU

ART UNIT	PAPER NUMBER
2837	

MAIL DATE	DELIVERY MODE
12/09/2008	PAPER

Please find below and/or attached an Office communication concerning this application or proceeding.

The time period for reply, if any, is set in the attached communication.

UNITED STATES PATENT AND TRADEMARK OFFICE

Commissioner for Patents
United States Patent and Trademark Office
P.O. Box 1450
Alexandria, VA 22313-1450
www.uspto.gov

PATENTS ON DEMAND, P.A.
4581 WESTON ROAD
SUITE 345
WESTON, FL 33331

In re Application of: Troy Glover et al. Serial No.: 12/192,983 Filed: August 15, 2008 Docket No.: RPS920080181US1 Title: CONTROLLING THE SPEED OF COOLING FANS FOR MULTIPLE COMPUTER SYSTEMS BASED ON ALTITUDE/FLUID DENSITY MEASUREMENTS FROM A CENTRALIZED SENSOR	DECISION ON PETITION TO MAKE SPECIAL FOR NEW APPLICATION UNDER 37 C.F.R. § 1.102 & M.P.E.P. § 708.02

This is a decision on the revised petition filed on October 27, 2008 to make the above-identified application special for accelerated examination procedure under 37 C.F.R. §1.102.

The petition to make the application special is **GRANTED**.

The application is eligible for accelerated examination and the petition complies with the conditions for granting the application special status pursuant to the "Change to Practice for Petitions in Patent Applications to Make Special and for Accelerated Examination" published June 26, 2006, in the Federal Register. (71 Fed. Reg. 36323).

The prosecution of the instant application will be conducted expeditiously according to the following guidelines.

1. The application will be docketed to an examiner and taken up for action within two weeks of the date of this decision.

2. Restriction Practice:
   If the examiner determines that the claims are not directed to a single invention, a telephone request to elect one single invention will be made pursuant to MPEP 812.01. As a prerequisite to the grant of this petition, the applicant has agreed to make an oral election, by telephone, without traverse. If the applicant refuses to make an election without traverse, or the examiner cannot reach the applicant after a reasonable effort, the examiner will treat the first claimed invention (invention defined by claim 1) as having being constructively elected without traverse for examination.

3. Office action:
   If it is determined that, after appropriate consultation, there is a potential rejection or any other issue to be addressed, the examiner will telephone the applicant and arrange an interview to discuss and resolve the issue. An Office action, other than a Notice of Allowance and Fee(s) Due (Notice of Allowance), will not be issued unless either: 1) an interview was conducted but did not result in agreed to action that places the application in condition for allowance, or, 2) a determination is made that an interview would be unlikely to result in the application being placed in condition for allowance, and 3) an internal conference has been held to review any rejection of any claim.

4. Time for Reply:
   An Office action other than a Notice of Allowance or a final Office action will set a shortened statutory period of one month or thirty days, whichever is longer, for reply with no extension of time available under 37 C.F.R. §1.136(a). Failure to timely file a reply within this non-extendible period for reply will result in the abandonment of the application.

5. Reply by Applicant:
   A timely reply to an Office action other than the Notice of Allowance must be submitted electronically via EFS or EFS-web and limited to addressing the rejections, objections and requirement made. Any amendment that attempts to: 1) add claims which would result in more than three pending independent claims or more than twenty pending total claims; 2) present claims not encompassed by the pre-examination search or an updated accelerated examination support document; or 3) present claims that are directed a non-elected invention or an invention other than that previously claimed and examined in the application, will be treated as not fully responsive and will not be entered.

   For any amendment to the claims (including any new claim) that is not encompassed by the accelerated examination support document, applicant must provide an updated accelerated examination support document that encompasses the amended or new claims at the time of filing of the amendment.

   To proceed expeditiously with the examination, it is recommended that a reply with amendments made to any claim or with any new claim being added be accompanied by an updated accelerated examination support document or a statement explaining how the amended or new claim is supported by the original accelerated examination support document.

6. Information Disclosure Statement (IDS):
   Any IDS filed during prosecution must be submitted electronically via EFS or EFS-web, accompanied by an updated accelerated examination support document, and be in compliance with 37 C.F.R. §1.97 and §1.98.

7. Post-Allowance Processing:
   To expedite processing of the allowed application into a patent, the applicant must: 1) pay the required fees within one month of the date of the Notice of Allowance, and 2) not file any post allowance papers not required by the Office. In no event may the issue fee be paid and accepted later than three months from the date of the Notice of Allowance.

8. After-Final and Appeal Procedures:
   To expedite prosecution, after receiving the final Office action, applicant must: 1) promptly file a notice of appeal, an appeal brief and appeal fees; and 2) not request a pre-appeal brief conference.

   Any amendment, affidavit or other evidence filed after final Office action must comply with applicable rules and the requirements outlined in numbered paragraphs 5 and 6 above.

   On appeal, the application will proceed according to normal appeal procedures. After appeal, the application will again be treated special.

9. Proceedings Outside the Normal Examination Process:
   If the application becomes involved in a proceeding that is outside the normal examination process (e.g., a secrecy order, national security review, interference proceeding, petitions under 37 C.F.R. §1.181, §1.182 or §1.183), the application will be treated special before and after such proceeding.

10. Final Disposition:
    The twelve-month goal of this accelerated examination procedure ends with a final disposition. The mailing of a final Office action, a Notice of Allowance, the filing of a Notice of Appeal, or the filing of a Request for Continued Examination (RCE) is the final disposition.

If, during prosecution, a paper is not filed electronically using EFS-web, a reply is filed but is not fully responsive, the application is involved in an appeal, or a proceeding outside normal examination process, the application will still be examined expeditiously, however, the final disposition may occur more than twelve months from the filing of the application.

Any inquiry regarding this decision should be directed to the undersigned at (571) 272-1638.

Edward Westin

Edward Westin, Quality Assurance Specialist
Technology Center 2800 - Semiconductors,
Electrical & Optical Systems & Components

EW/JC

UNITED STATES PATENT AND TRADEMARK OFFICE

Commissioner for Patents
United States Patent and Trademark Office
P.O. Box 1450
Alexandria, VA 22313-1450
www.uspto.gov

Frederic M. Douglas
15333 Culver Drive
Suite 340 PMB 114
Irvine, CA 92604-3051

MAILED
SEP 30 2009
OFFICE OF PETITIONS

In re Application of	:	
Chester Sohn	:	
Application No. 12/192,991	:	DECISION ON PETITION
Filed: August 16, 2008	:	
Attorney Docket No. CS-01	:	

This is a decision on the petition under the unintentional provisions of 37 CFR 1.137(b), filed August 25, 2009, to revive the above-identified application.

The petition is **GRANTED**.

The application became abandoned for failure to reply in a timely manner to the Notice to File Missing Parts of Non-Provisional Application (Notice), mailed August 28, 2008. The Notice set a period for reply of two (2) months from the mail date of the Notice. No extensions of time under the provisions of 37 CFR 1.136(a) were obtained. Accordingly the case became abandoned on October 29, 2008. A Notice of Abandonment was mailed on April 16, 2009.

The petition satisfies the requirements of 37 CFR 1.137(b) in that petitioner has supplied (1) the reply in the form of a new oath and declaration with the required fee of $65, (2) the petition fee of $810, and (3) a proper statement of unintentional delay. Accordingly the oath and declaration and surcharge fee is accepted as being unintentionally delayed.

This application is being referred to the Office of Patent Application Processing for appropriate action in the normal course of business on the reply received April 1, 2009.

Carl Friedman
Petitions Examiner
Office of Petitions

UNITED STATES PATENT AND TRADEMARK OFFICE

Commissioner for Patents
United States Patent and Trademark Office
P.O. Box 1450
Alexandria, VA 22313-1450
www.uspto.gov

SAWYER LAW GROUP LLP
2465 E. BAYSHORE ROAD, SUITE NO. 406
PALO ALTO CA 94303

COPY MAILED

MAR 0 2 2009

OFFICE OF PETITIONS

In re Application of

SAVAGE, Howard S. et al.
Application No. 12/193,019
Filed: August 17, 2008
Attorney Docket No. **08-02-13007/4316P**

DECISION ON PETITION
TO WITHDRAW
FROM RECORD

This is a decision on the Request to Withdraw as attorney or agent of record under 37 C.F.R. § 1.36(b), filed January 23, 2009.

The request is **NOT APPROVED**.

The Office has revised its change in procedure for request to withdraw from representation applies to requests filed on or after May 12, 2008.

A grantable request to withdraw as attorney/agent of record must be signed by every attorney/agent seeking to withdraw or contain a clear indication that one attorney is signing on behalf of another/others. The Office requires the practitioner(s) requesting withdrawal to certify that he, she, or they have: (1) given reasonable notice to the client, prior to the expiration of the response period, that the practitioner(s) intends to withdraw from employment; (2) delivered to the client or a duly authorized representative of the client all papers and property (including funds) to which the client is entitled; and (3) notified the client of any responses that may be due and the time frame within which the client must respond, pursuant 37 CFR 10.40(c).

The request cannot be approved because there is no indication that act (1) noted in the above-identified certifications have been performed.

All future communications from the Office will continue to be directed to the above-listed address until otherwise notified by applicant.

Telephone inquiries concerning this decision should be directed to Tredelle Jackson at 571-272- 2783.

Tredelle D. Jackson
Paralegal Specialist
Office of Petitions

cc: **CUMMINS INC.**
ATTN: INTELLECTUAL PROPRETY GROUP
500 JACKSON STREET
COLUMBUS IN 47201

UNITED STATES PATENT AND TRADEMARK OFFICE

UNITED STATES DEPARTMENT OF COMMERCE
United States Patent and Trademark Office
Address: COMMISSIONER FOR PATENTS
P.O. Box 1450
Alexandria, Virginia 22313-1450
www.uspto.gov

BORDEN LADNER GERVAIS LLP
Anne Kinsman
WORLD EXCHANGE PLAZA
100 QUEEN STREET SUITE 1100
OTTAWA, ON K1P 1J9
CANADA

Mail Date: 04/30/2010

Applicant	: Huy Tuong MAI	: DECISION ON REQUEST FOR
Patent Number	: 7656223	: RECALCULATION of PATENT
Issue Date	: 02/02/2010	: TERM ADJUSTMENT IN VIEW
Application No	: 12/193,077	: OF WYETH AND NOTICE OF INTENT TO
Filed	: 08/18/2008	: ISSUE CERTIFICATE OF CORRECTION
		:

The Request for Recalculation is **GRANTED** to the extent indicated.

The patent term adjustment has been determined to be **0** days. The USPTO will *sua sponte* issue a certificate of correction reflecting the amount of PTA days determined by the recalculation.

Prior to the issuance of the certificate of correction, the USPTO will afford patentee an opportunity to be heard and request reconsideration. Accordingly, patentee has **one month or thirty (30) days**, whichever is longer, to file a request for reconsideration of this patent term adjustment calculation. See 35 U.S.C. 154(b)(3)(B)(ii) and 37 CFR 1.322(a)(4). No extensions of time will be granted under 37 CFR 1.136.

Patentee should use document code PET.OP if electronically filing a request for reconsideration of this patent term adjustment calculation. The patentee must also include the information required by 37 CFR 1.705(b)(2) and the fee required by 37 CFR 1.18(e). If patentee does not file a timely request for reconsideration of this patent term adjustment calculation including the information required by 37 CFR 1.705(b)(2) and the fee required by 37 CFR 1.18(e), the USPTO will issue a certificate of correction reflecting the PTA determination noted above.

Patentee should be aware that in order to preserve the right to review in the United States District Court for the District of Columbia of the USPTO patent term adjustment determination, patentee must ensure that he or she also take the steps required under 35 U.S.C. 154(b)(4)(A) in a timely manner. Nothing in the request for recalculation should be construed as providing an alternative time frame for commencing a civil action under 35 U.S.C. 154(b)(4)(A).

Any questions concerning this decision should be directed to the Office of Patent Legal Administration at 571-272-7702.

UNITED STATES PATENT AND TRADEMARK OFFICE

UNITED STATES DEPARTMENT OF COMMERCE
United States Patent and Trademark Office
Address: COMMISSIONER FOR PATENTS
P.O. Box 1450
Alexandria, Virginia 22313-1450
www.uspto.gov

APPLICATION NO.	FILING DATE	FIRST NAMED INVENTOR	ATTORNEY DOCKET NO.	CONFIRMATION NO.
12/193,107	08/18/2008	Robert G. Biskeborn	SJO920080042US1	4234

45046 7590 10/24/2008
IBM CORPORATION (SWP)
C/O SUITER SWANTZ PC LLO
14301 FNB PARKWAY, SUITE 220
OMAHA, NE 68154-5299

EXAMINER
CHEN, KIN CHAN

ART UNIT	PAPER NUMBER
1792	

MAIL DATE	DELIVERY MODE
10/24/2008	PAPER

Please find below and/or attached an Office communication concerning this application or proceeding.

The time period for reply, if any, is set in the attached communication.

UNITED STATES PATENT AND TRADEMARK OFFICE

Commissioner for Patents
United States Patent and Trademark Office
P.O. Box 1450
Alexandria, VA 22313-1450
www.uspto.gov

CST

10/24/08

In re application of
Robert G. Biskeborn et al
Serial No. 12/193,107
Filed: August 18, 2008
For: MAGNETIC RECORDING HEAD COATING AND METHOD

DECISION ON PETITION TO MAKE SPECIAL

This is a decision on the petition filed on August 18, 2008 to make the above-identified application special under the accelerated examination program.

The petition to make the application special is **DISMISSED.**

REGULATION AND PRACTICE

A grantable petition to make special under 37 C.F.R. § 1.102(d) and pursuant to the "Change to Practice for Petitions in Patent Applications to Make Special and for Accelerated Examination" published in the Federal Register on June 26, 2006 (71 Fed. Reg. 36323), must satisfy the following conditions:

I. Conditions Regarding the Application:

1. the application must be a non-reissue utility or design application filed under 37 CFR 1.111(a);
2. the application, the petition and the required fees must be filed electronically using the USPTO's electronic filing system (EFS), or EFS-web; if not filed electronically, a statement asserting that EFS and EFS-web were not available during the normal business hours;
3. at the time of filing, the application must be complete under 37 CFR 1.51 and in condition for examination;
4. the application must contain three or fewer independent claims and twenty or fewer total claims and the claims must be directed to a single invention.

II. Conditions Regarding the Petition:

The petition must:

1. be filed with the application;
2. include a statement that applicant agrees not to separately argue the patentability of any dependent claim during any appeal in the application;

3. include a statement that applicant agrees to make an election without traverse in a telephone interview;

4. include a statement that applicant agrees to conduct such an interview when requested by the examiner;

5. include a statement, made based on a good faith belief, that a preexamination search in compliance with the following requirements, was conducted, including an identification of the field of search by United States class and subclass, where applicable, and for database searches, the search logic or chemical structure or sequence used as a query, the name of the file(s) searched and the database service, and the date of the search.

The preexamination search must:

5.1 involve U.S. patents and patent application publications, foreign patent documents, and non-patent literature, unless the applicant can justify with reasonable certainty that no references more pertinent than those already identified are likely to be found in the eliminated sources and includes such a justification with this statement;

5.2. be directed to the claimed invention and encompass all of the features of the claims, giving the claims the broadest reasonable interpretation;

5.3. encompass the disclosed features that may be claimed.

6. must provide in support of the petition an accelerated examination support document.

An accelerated examination support document must include:

6.1. an information disclosure statement (IDS) in compliance with 37 CFR 1.98 citing each reference deemed most closely related to the subject matter of each of the claims;

6.2. an identification of all the limitations in the claims that are disclosed by the reference specifying where the limitation is disclosed in the cited reference;

6.3. a detailed explanation of how each of the claims are patentable over the references cited with particularity required by 37 CFR 1.111(b) and (c);

6.4. a concise statement of the utility of the invention as defined in each of the independent claims (unless the application is a design application);

6.5. a showing of where each limitation of the claims finds support under 35 USC 112, first paragraph, in the written description of the specification. If applicable, the showing must also identify: (1) each means- (or step) plus-function claim element that invokes consideration under 35 USC 112, sixth paragraph; and (2) the structure, material, or acts in the specification that corresponds to each means- (or step) plus-function claim element that invokes consideration under 35 USC 112, sixth paragraph; if the application claims the benefit of one or more applications under title 35, United States Code, the showing must also include where each limitation of the claims finds support under 35 USC 112, first paragraph, in each such application in which such supports exists;

6.6. an identification of any cited references that may be disqualified under 35 USC 103(c).

REVIEW OF FACTS

The conditions regarding the application (section I, subsections 1-4) discussed above are considered to have been met. Additionally, the conditions regarding the petition, section II, subsections 1-4, are considered to have been met. However, the petition fails to comply with condition II, subsections 5 and 6.

First, it appears that the search is incomplete. Note that a search in Class 216, subclasses 88 and 89 and Class 427, subclasses 419.1, 419.7, 331 and 355 is also required.

With respect to the references discussed in the Accelerated Examination Support Document (AESD) on pages 2-6, while petitioner discusses the cited references in detail, petitioner has failed to identify where each and every limitation of the claims are disclosed in the cited references. For example, although petitioner discusses each reference and elements (a), (b) and (c) of claim 1, it is unclear which portions of elements (a), (b) and (c) are actually taught by the cited references; especially as the language of the cited references appears to differ from the language set forth in the claims. Accordingly, applicant is required to show how the cited references correspond to the present claims, for example by mapping each and every claim limitation to the corresponding teaching in the cited reference.

Similarly, petitioner has not provided a detailed explanation of how claim 1 is patentable over the references cited with particularity. For example, while petitioner notes that the references do not disclose element (a) of the claims, petitioner does not specify which portion of element (a) is taught by the reference and which portion of element (a) is not taught by the reference.

Therefore, the petition fails to meet the required conditions to be accorded special status under the accelerated examination procedure.

DECISION

For the above-stated reasons, the petition is dismissed. The application will therefore be taken up by the examiner in its regular turn.

Petitioner is given a single opportunity to perfect the petition. Any request for reconsideration of this decision must be submitted within 1 (one) month or 30 (thirty) days, whichever is longer, (no extension of time under 37 CFR 1.136(a)) from the date of this decision in order to be considered timely. Any request for reconsideration must address the deficiencies indicated above.

Petitioner is reminded that, upon granting of the special status of the application on request for reconsideration, the application will be processed expeditiously. However,

due to the dismissal of the instant petition, examination may not be completed within twelve months of the filing date of the application.

Any inquiry regarding this decision should be directed to Christine Tierney, Quality Assurance Specialist, at (571) 272-1055.

/ Christine Tierney /

Christine Tierney
Quality Assurance Specialist
Technology Center 1700

UNITED STATES PATENT AND TRADEMARK OFFICE

UNITED STATES DEPARTMENT OF COMMERCE
United States Patent and Trademark Office
Address: COMMISSIONER FOR PATENTS
P.O. Box 1450
Alexandria, Virginia 22313-1450
www.uspto.gov

APPLICATION NO.	FILING DATE	FIRST NAMED INVENTOR	ATTORNEY DOCKET NO.	CONFIRMATION NO.
12/193,107	08/18/2008	Robert G. Biskeborn	SJO920080042US1	4234

82294 7590 12/17/2008
IBM CORPORATION (ACCSP)
c/o Suiter Swantz pc llo
14301 FNB Parkway, Suite 220
Omaha, NE 68154

EXAMINER
CHEN, KIN CHAN

ART UNIT	PAPER NUMBER
1792	

MAIL DATE	DELIVERY MODE
12/17/2008	PAPER

Please find below and/or attached an Office communication concerning this application or proceeding.

The time period for reply, if any, is set in the attached communication.

UNITED STATES PATENT AND TRADEMARK OFFICE

Commissioner for Patents
United States Patent and Trademark Office
P.O. Box 1450
Alexandria, VA 22313-1450
www.uspto.gov

DEC 17 2008

CST

In re application of Robert G. Biskeborn et al Serial No. 12/193,107 Filed: August 18, 2008 For: MAGNETIC RECORDING HEAD COATING AND METHOD	: : : : : :	DECISION ON PETITION TO MAKE SPECIAL

This is a decision on the request for reconsideration filed on November 20, 2008 to make the above-identified application special under the accelerated examination program.

The petition to make the application special is **DENIED.**

REGULATION AND PRACTICE

A grantable petition to make special under 37 C.F.R. § 1.102(d) and pursuant to the "Change to Practice for Petitions in Patent Applications to Make Special and for Accelerated Examination" published in the Federal Register on June 26, 2006 (71 Fed. Reg. 36323), must satisfy the following conditions:

I. Conditions Regarding the Application:

1. the application must be a non-reissue utility or design application filed under 37 CFR 1.111(a);
2. the application, the petition and the required fees must be filed electronically using the USPTO's electronic filing system (EFS), or EFS-web; if not filed electronically, a statement asserting that EFS and EFS-web were not available during the normal business hours;
3. at the time of filing, the application must be complete under 37 CFR 1.51 and in condition for examination;
4. the application must contain three or fewer independent claims and twenty or fewer total claims and the claims must be directed to a single invention.

II. Conditions Regarding the Petition:

The petition must:

1. be filed with the application;

2. include a statement that applicant agrees not to separately argue the patentability of any dependent claim during any appeal in the application;

3. include a statement that applicant agrees to make an election without traverse in a telephone interview;

4. include a statement that applicant agrees to conduct such an interview when requested by the examiner;

5. include a statement, made based on a good faith belief, that a preexamination search in compliance with the following requirements, was conducted, including an identification of the field of search by United States class and subclass, where applicable, and for database searches, the search logic or chemical structure or sequence used as a query, the name of the file(s) searched and the database service, and the date of the search.

The preexamination search must:

5.1 involve U.S. patents and patent application publications, foreign patent documents, and non-patent literature, unless the applicant can justify with reasonable certainty that no references more pertinent than those already identified are likely to be found in the eliminated sources and includes such a justification with this statement;

5.2. be directed to the claimed invention and encompass all of the features of the claims, giving the claims the broadest reasonable interpretation;

5.3. encompass the disclosed features that may be claimed.

6. must provide in support of the petition an accelerated examination support document.

An accelerated examination support document must include:

6.1. an information disclosure statement (IDS) in compliance with 37 CFR 1.98 citing each reference deemed most closely related to the subject matter of each of the claims;

6.2. an identification of all the limitations in the claims that are disclosed by the reference specifying where the limitation is disclosed in the cited reference;

6.3. a detailed explanation of how each of the claims are patentable over the references cited with particularity required by 37 CFR 1.111(b) and (c);

6.4. a concise statement of the utility of the invention as defined in each of the independent claims (unless the application is a design application);

6.5. a showing of where each limitation of the claims finds support under 35 USC 112, first paragraph, in the written description of the specification. If applicable, the showing must also identify: (1) each means- (or step) plus-function claim element that invokes consideration under 35 USC 112, sixth paragraph; and (2) the structure, material, or acts in the specification that corresponds to each means- (or step) plus-function claim element that invokes consideration under 35 USC 112, sixth paragraph; if the application claims the benefit of one or more applications under title 35, United States Code, the showing must also include where each limitation of the claims finds support under 35 USC 112, first paragraph, in each such application in which such supports exists;

6.6. an identification of any cited references that may be disqualified under 35 USC 103(c).

REVIEW OF FACTS

The conditions regarding the application (section I, subsections 1-4) discussed above are considered to have been met. Additionally, the conditions regarding the petition, section II, subsections 1-5, are considered to have been met. However, the petition fails to comply with condition II, subsection 6.

In the petition decision of October 24, 2008, it was noted that while petitioner discussed the cited references in detail on pages 2-6 of the Accelerated Examination Support Document (AESD), petitioner failed to identify where each and every limitation of the claims were disclosed in the cited references. For example, although petitioner discussed each reference and elements (a), (b) and (c) of claim 1, it was unclear which portions of elements (a), (b) and (c) are actually taught by the cited references; especially as the language of the cited references appears to differ from the language set forth in the claims.

In response, applicant has filed a revised AESD. This revised AESD, however, only discusses the Gao et al and Ju et al references. The references to Werner and Zammit which were discussed in the original AESD are not further discussed in the revised AESD. Specifically, applicant has failed to show how the teachings of the Werner and Zammit references correspond to the present claims, for example by mapping each and every claim limitation to the corresponding teaching in the cited references.

Similarly, petitioner has not provided a detailed explanation of how claim 1 is patentable over the Werner and Zammit references cited with particularity. For example, while petitioner notes that the references do not disclose element (a) of the claims, petitioner does not specify which portion of element (a) is taught by the reference and which portion of element (a) is not taught by the reference.

Therefore, the petition fails to meet the required conditions to be accorded special status under the accelerated examination procedure.

DECISION

For the above-stated reasons, the petition is denied. The application will therefore be taken up by the examiner in its regular turn.

Any inquiry regarding this decision should be directed to Christine Tierney, Quality Assurance Specialist, at (571) 272-1055.

/ Christine Tierney /

Christine Tierney
Quality Assurance Specialist
Technology Center 1700

UNITED STATES PATENT AND TRADEMARK OFFICE

UNITED STATES DEPARTMENT OF COMMERCE
United States Patent and Trademark Office
Address: COMMISSIONER FOR PATENTS
P.O. Box 1450
Alexandria, Virginia 22313-1450
www.uspto.gov

APPLICATION NO.	FILING DATE	FIRST NAMED INVENTOR	ATTORNEY DOCKET NO.	CONFIRMATION NO.
12/193,120	08/18/2008	Terry L. Marker	H0016339-01	4252

23490 7590 02/05/2010
HONEYWELL/UOP
PATENT SERVICES
101 COLUMBIA DRIVE
P O BOX 2245 MAIL STOP AB/2B
MORRISTOWN, NJ 07962

EXAMINER

ART UNIT	PAPER NUMBER
1797	

NOTIFICATION DATE	DELIVERY MODE
02/05/2010	ELECTRONIC

Please find below and/or attached an Office communication concerning this application or proceeding.

The time period for reply, if any, is set in the attached communication.

Notice of the Office communication was sent electronically on above-indicated "Notification Date" to the following e-mail address(es):

IP.Docketclerk@uop.com
PatentServices-US@Honeywell.com
IP.Docketclerk@Honeywell.com

UNITED STATES PATENT AND TRADEMARK OFFICE

Commissioner for Patents
United States Patent and Trademark Office
P.O. Box 1450
Alexandria, VA 22313-1450
www.uspto.gov

HONEYWELL/UOP
PATENT SERVICES
101 COLUMBIA DRIVE
P O BOX 2245 MAIL STOP AB/2B
MORRISTOWN NJ 07962

FEB 05 2010

In re Application of	:	
Marker et al.	:	DECISION ON PETITION
Application No. 12/193,120	:	TO MAKE SPECIAL UNDER
Filed: 8/18/2008	:	THE GREEN TECHNOLOGY
Attorney Docket No. **H0016339-01**	:	PILOT PROGRAM

This is a decision on the petition under 37 CFR 1.102, filed 12/11/2009, to make the above-identified application special under the pilot program for applications pertaining to Green Technologies as set forth 74 Federal Register Notice 64666 (December 8, 2009).

The petition is **DISMISSED**.

If reconsideration of this decision is desired, a petition for reconsideration must be filed within ONE (1) MONTH OR THIRTY (30) DAYS from the mail date of this decision, whichever is longer. No extension of this time limit can be granted under 37 CFR 1.136(a) or (b). The petition for reconsideration should include an exhaustive attempt to provide the lacking item(s) noted below, since, after a decision on the petition for reconsideration, no further reconsideration or review of the matter will be undertaken by the Director.

A grantable petition to make an application special under 37 CFR 1.102 and the pilot program as set forth in 74 FR 64666 must be directed to a nonprovisional application filed under 35 USC 111(a) or be a national stage entry under 35 USC 371, exclusive of any reissue applications and be filed prior to the date of the notice, December 8, 2009.

In order to qualify for special status, the following requirements must be met. 1) The application must be classified in one of the eligible US classifications listed in section VI of the notice. 2) The application must have no more than 3 independent claims and no more than 20 total claims. 3) The application must not contain any multiple dependent claims. 4) The petition must state the basis for seeking special status, i.e., the claimed invention either: A) materially enhances the quality of the environment or B) materially contributes to: i) the discovery or development of renewable energy resources, ii) the more efficient utilization and conservation of energy resources, or iii) greenhouse gas emission reduction. 5) If the disclosure is not clear on its face

that the claimed invention materially contributes under category (A) or (B), the petition must be accompanied by a statement by the applicant, assignee, or an attorney/agent registered to practice before the Office explaining how the materiality standard is met. 6) A statement that applicant will agree to make an election without traverse in a telephonic interview if a restriction requirement is made by the examiner. 7) The petition to make special must be filed electronically. 8) The petition must be filed at least one day prior to the date that a first Office Action appears in the Patent Application Information Retrieval (PAIR) system. 9) The petition must be accompanied by a request for early publication in compliance with 37 CFR 1.219 and include the publication fee as set forth in 37 CFR 1.18(d).

The requirement for a fee for consideration of the petition to make special for applications pertaining to Green Technologies has been waived.

The petition lacks item(s) 1.

In regard to item 1, petitioner should note that this application has been classified in an area (USPC 44/308.000) that is not one of the eligible US classifications listed in section VI of the notice. Therefore, this application is not eligible for the Pilot Program. The classification limitations are purposefully made to be narrow for the Pilot Program; however, these may be expanded based upon the success of the Pilot Program. Petitioner may file a preliminary amendment that would cause this application to be classified elsewhere. However, while petitioner may suggest a classification (see, e.g., MPEP 708.02(a)(VII)(C)), the application will be assigned to the most appropriate classification based upon current U.S. classification guidelines. Furthermore, a petition for the Pilot Program should not be filed until and unless all of the requirements set forth in the Notice are met; i.e., a petition should not be filed for an application that is currently classified outside the eligible classifications set forth in the Notice.

Any reconsideration of this decision should be submitted through the USPTO electronic filing system, EFS-Web, and selecting the document description of "Petition for Green Tech Pilot" on the EFS-Web screen.

Telephone inquiries concerning this decision should be directed to Tom Dunn at 571-272-1171.

The application is being forwarded to the Technology Center Art Unit 1797 for action in its regular turn.

/Tom Dunn/

Tom Dunn
Quality Assurance Specialist
Technology Center 1700

UNITED STATES PATENT AND TRADEMARK OFFICE

UNITED STATES DEPARTMENT OF COMMERCE
United States Patent and Trademark Office
Address: COMMISSIONER FOR PATENTS
P.O. Box 1450
Alexandria, Virginia 22313-1450
www.uspto.gov

APPLICATION NO.	FILING DATE	FIRST NAMED INVENTOR	ATTORNEY DOCKET NO.	CONFIRMATION NO.
12/193,120	08/18/2008	Terry L. Marker	H0016339-01	4252

23490 7590 03/17/2010
HONEYWELL/UOP.
PATENT SERVICES
101 COLUMBIA DRIVE
P O BOX 2245 MAIL STOP AB/2B
MORRISTOWN, NJ 07962

EXAMINER

ART UNIT	PAPER NUMBER
1797	

NOTIFICATION DATE	DELIVERY MODE
03/17/2010	ELECTRONIC

Please find below and/or attached an Office communication concerning this application or proceeding.

The time period for reply, if any, is set in the attached communication.

Notice of the Office communication was sent electronically on above-indicated "Notification Date" to the following e-mail address(es):

IP.Docketclerk@uop.com
PatentServices-US@Honeywell.com
IP.Docketclerk@Honeywell.com

UNITED STATES PATENT AND TRADEMARK OFFICE

Commissioner for Patents
United States Patent and Trademark Office
P.O. Box 1450
Alexandria, VA 22313-1450
www.uspto.gov

HONEYWELL/UOP
PATENT SERVICES
101 COLUMBIA DRIVE
P O BOX 2245 MAIL STOP AB/2B
MORRISTOWN NJ 07962

MAR 17 2010

In re Application of	:	
Marker et al.	:	DECISION ON PETITION
Application No. 12/193,120	:	TO MAKE SPECIAL UNDER
Filed: 8/18/2008	:	THE GREEN TECHNOLOGY
Attorney Docket No. **H0016339-01**	:	PILOT PROGRAM

This is a decision on the request for reconsideration, filed 3/5/2010, to make the above-identified application special under the pilot program for applications pertaining to Green Technologies as set forth 74 Federal Register Notice 64666 (December 8, 2009).

The petition is **DENIED**.

A grantable petition to make an application special under 37 CFR 1.102 and the pilot program as set forth in 74 FR 64666 must be directed to a nonprovisional application filed under 35 USC 111(a) or be a national stage entry under 35 USC 371, exclusive of any reissue applications and be filed prior to the date of the notice, December 8, 2009.

In order to qualify for special status, the following requirements must be met. 1) The application must be classified in one of the eligible US classifications listed in section VI of the notice. 2) The application must have no more than 3 independent claims and no more than 20 total claims. 3) The application must not contain any multiple dependent claims. 4) The petition must state the basis for seeking special status, i.e., the claimed invention either: A) materially enhances the quality of the environment or B) materially contributes to: i) the discovery or development of renewable energy resources, ii) the more efficient utilization and conservation of energy resources, or iii) greenhouse gas emission reduction. 5) If the disclosure is not clear on its face that the claimed invention materially contributes under category (A) or (B), the petition must be accompanied by a statement by the applicant, assignee, or an attorney/agent registered to practice before the Office explaining how the materiality standard is met. 6) A statement that applicant will agree to make an election without traverse in a telephonic interview if a restriction requirement is made by the examiner. 7) The petition to make special must be filed electronically. 8) The petition must be filed at least one day prior to the date that a first Office Action appears in the Patent Application Information Retrieval (PAIR) system. 9) The petition

must be accompanied by a request for early publication in compliance with 37 CFR 1.219 and include the publication fee as set forth in 37 CFR 1.18(d).

The requirement for a fee for consideration of the petition to make special for applications pertaining to Green Technologies has been waived.

The petition lacks item(s) 1.

Applicants arguments regarding the suggested classification have been considered but are not deemed to be persuasive. While applications are routinely cross referenced in multiple related classes/subclasses, the Original classification is determined by the following factors:

1) Hierarchy of categories of subject matter (e.g. method of using claims determine classification over article claims).

2) Superiority of types of subject matter (e.g. chemical subject matter controls over electrical subject matter).

3) Class superiority. All classes in the US Classification system are assigned a relative superiority. This listing of all classes arranged by their relative superiority can be found on the USPTO website on the Classification Home Page under the link entitled "Classes Within the US Classification System Arranged by Related Subjects."

Based on the criteria above, the current Original classification is deemed to be appropriate.

Telephone inquiries concerning this decision should be directed to Tom Dunn at 571-272-1171.

The application is being forwarded to the Technology Center Art Unit 1797 for action in its regular turn.

/Tom Dunn/

Tom Dunn
Quality Assurance Specialist
Technology Center 1700

UNITED STATES PATENT AND TRADEMARK OFFICE

UNITED STATES DEPARTMENT OF COMMERCE
United States Patent and Trademark Office
Address: COMMISSIONER FOR PATENTS
P.O. Box 1450
Alexandria, Virginia 22313-1450
www.uspto.gov

APPLICATION NO.	FILING DATE	FIRST NAMED INVENTOR	ATTORNEY DOCKET NO.	CONFIRMATION NO.
12/193,127	08/18/2008	Giuseppe Fioretti	FR920080179US1	4268

82294 7590 02/06/2009
IBM CORPORATION (ACCSP)
c/o Suiter Swantz pc llo
14301 FNB Parkway, Suite 220
Omaha, NE 68154

EXAMINER
AN, MENG AI T

ART UNIT	PAPER NUMBER
2195	

MAIL DATE	DELIVERY MODE
02/06/2009	PAPER

Please find below and/or attached an Office communication concerning this application or proceeding.

The time period for reply, if any, is set in the attached communication.

UNITED STATES PATENT AND TRADEMARK OFFICE

Commissioner for Patents
United States Patent and Trademark Office
P.O. Box 1450
Alexandria, VA 22313-1450
www.uspto.gov

MAILED

FEB 06 2009

TECHNOLOGY CENTER 2100

IBM CORPORATION (ACCSP)
c/o Suiter Swantz pc llo
14301 FNB Parkway, Suite 220
Omaha NE 68154

In re Application of: FIORETTI, Giuseppe et. al.
Serial No.: **12/193,127**
Filed: August 18, 2008
Attorney Docket No.: FR920080179US1
Title: METHOD FOR TRACKING LOCAL STORAGE OF WEB PAGES

DECISION ON PETITION TO MAKE SPECIAL FOR NEW APPLICATION UNDER 37 C.F.R. § 1.102 & M.P.E.P. § 708.02

This is a decision on the petition filed on August 18, 2008 to make the above-identified application special for accelerated examination procedure under 37 C.F.R. § 1.102(d).

The petition to make the application special is **DISMISSED**.

REGULATION AND PRACTICE

A grantable petition to make special under 37 C.F.R. § 1.102(d) and pursuant to the "Change to Practice for Petitions in Patent Applications to Make Special and for Accelerated Examination" published in the Federal Register on June 26, 2006 (71 Fed. Reg. 36323), must satisfy the following conditions:

I. Conditions Regarding the Application:

1. the application must be a non-reissue utility or design application filed under 37 CFR 1.111(a);
2. the application, the petition and the required fees must be filed electronically using the USPTO's electronic filing system (EFS), or EFS-web; if not filed electronically, a statement asserting that EFS and EFS-web were not available during the normal business hours.
3. at the time of filing, the application must be complete under 37 CFR 1.51 and in condition for examination;
4. the application must contain three or fewer independent claims and twenty or fewer total claims and the claims must be directed to a single invention.

II. Conditions Regarding the Petition:

The petition must:

1. be filed with the application;
2. include a statement that applicant agrees not to separately argue the patentability of any dependent claim during any appeal in the application;
3. include a statement that applicant agrees to make an election without traverse in a telephone interview.
4. include a statement that applicant agrees to conduct such an interview when requested by the examiner.
5. include a statement, made based on a good faith belief, that a preexamination search in compliance with the following requirements, was conducted, including an identification of the filed of search by United States class and subclass, where applicable, and for database searches, the search logic or chemical structure or sequence used as a query, the name of the file(s) searched and the database service, and the date of the search.

The pre-examination search must:

5.1 involve U.S. patents and patent application publications, foreign patent documents, and non-patent literature, unless the applicant can justify with reasonable certainty that no references more pertinent than those already identified are likely to be found in the eliminated sources and includes such a justification with this statement;

5.2. be directed to the claimed invention and encompass all of the features of the claims, giving the claims the broadest reasonable interpretation;

5.3. encompass the disclosed features that may be claimed.

6. The pre-examination search must provide in support of the petition an accelerated examination support document. An accelerated examination support document must include:

6.1. an information disclosure statement (IDS) in compliance with 37 CFR 1.98 citing each reference deemed most closely related to the subject matter of each of the claims;

6.2. an identification of all the limitations in the claims that are disclosed by the reference specifying where the limitation is disclosed in the cited reference;

6.3. a detailed explanation of how each of the claims is patentable over the references cited with particularity required by 37 CFR 1.111 (b) and (c);

6.4. a concise statement of the utility of the invention as defined in each of the independent claims (unless the application is a design application);

6.5. a showing of where each limitation of the claims finds support under 35 USC 112, first paragraph, in the written description of the specification. If applicable, the showing must also identify:

(1) each means-(or step) plus-function claim element that invokes consideration under 35 USC 112, sixth paragraph; and

(2) the structure, material, or acts in the specification that corresponds to each means- (or step) plus-function claim element that invokes consideration under 35 USC 112, sixth paragraph; if the application claims the benefit of one or more applications under title 35, United States Code, the showing must

also include where each limitation of the claims finds support under 35 USC 112, first paragraph, in each such application in which such supports exists;

6.6. an identification of any cited references that may be disqualified under 35 U.S.C. §103(c).

REVIEW OF FACTS

The conditions [I. 1-4, II. 1-5, II. 5.1, and II. 6.1-6.6] above are considered to have been met. However, the petition fails to comply with the conditions [II. 5.2]. Therefore, the petition fails to meet the required conditions to be accorded special status under the accelerated examination procedure.

Regarding the requirement of MPEP §708.02(a)(I)(H)(2) and item II 5.2 above, the Petitioner's preexamination search does not encompass all of the features of the claims, given the broadest reasonable interpretation.

Specifically, the pre-examination search strategy/logic conducted on August 2, 2007 does not encompass **all** of the features of the **claims**, namely, this search conducted on the **Thomas/Aureka** database, does not seem to encompass the following claimed **underlined** features:

1. A method for tracking client side storage of a web page, comprising:
providing a script in the web page for responding to a save operation;
responding to the save operation initiated in a browser;
sending a set of tracking information to at least one of a first HTTP server providing the web page and a second HTTP server providing a particular resource to be stored;
forwarding the set of tracking information to an application server;
storing the set of tracking information.

Specifically, the Petitioner's pre-examination search does not encompass what is claimed, namely, tracking client side storage of web page. Although, the sent tracking information *as claimed* does not seem to be that of the web page, nor does it seem related to the save operation, search strategy does not cover the claimed subject matter: "providing a script in the web page for responding to a save operation and responding to the save operation initiated in a browser".

It is noted that these features have been identified as key features in the Detailed Explanation of Patentability by applicant to distinguishing the instant claimed subject matter from the cited prior art references deemed most closely related to the claimed invention in the Examination Support Document. Since the search logic does not include the relevant search terms mentioned above, the alleged patentable features and concept appear to have not been searched. The Petitioner is advised to review the all claim limitations, especially those asserted as patentable distinctions from the cited references to ensure the preexamination search covers these concepts, and update the search and/or provide any clarification for the deficiencies identified above if deemed necessary.

Regarding the requirement of MPEP §708.02(a)(I)(H)(2) and item II 5.2 above, the pre-examination search (PREX SRCH) must: be directed to the instant claimed invention and encompass all of the features of the claims, giving the claim the broadest reasonable interpretation.

The search logic does not seems to include the inventive concept or features included in the claim language that covers the subject matter of the claims using terms recognized in the art given their broadest reasonable interpretation. The search should consider individual features by themselves and combinations of features. The search should cover the **broadest scope** encompassed by the claims **as well as** claims of **narrow and intermediate breadth**. See example of suggested term(s) below.

The text search query reported by the Petitioner fails for its lack of depth and breadth to cover all of the concepts the claims recite. The text search query fails for lack of inclusion of applicable/alternative search/key terms, and their synonyms, use of proper proximity operators, and truncation characters, as used in the claims of the invention.

Here is an exemplarily search strategy that would depth and breadth to cover all concepts the claims and intended to **supplement** Petitioner's text search set forth on the preexamination search document in order to provide full coverage of where the most pertinent references are most likely to be found:

(plug-in applet agent ((monitor$4 log$4 record$4) with (script program code))) with (cach$4 stor$4 sav$4) with (document file page object multimedia content)

(plug-in applet agent script program) with (save near (command instruction operation button)) with (browser window interface UI GUI or (user near interface))

(monitor$4 track$4 record$4 log$4) with cach$4 with (document file page object multimedia content)

(save near (command operation instruction button)) with (monitor$4 track$4 record$4 log$4) with (page document file multimedia content)

(collect$4 gather$4) with (track$4 log$4 record$4) with (data information) with (database repository host server provider proxy)

(client user customer consumer subscriber) with (monitor$4 track$4 record$4 log$4) with cach$4 with (document file page object multimedia content)

Default proximity operator is "OR", other proximity operators used in for example EAST are: "adj", "near", "with", "same".

Note that the above list of terms and synonyms are not meant to be an exhaustive list, merely an example of various terms and synonyms that can be used to produce a more comprehensive prior art search. Nor these examples are limited only to those sets of search terms provide; each search term used should be evaluated for applicable synonyms. Additionally, searches utilizing other databases should be modified to include the above-mentioned terms and synonyms.

These text search strategies should be added to supplement the classified search performed. It should be noted that it is rare that a text search alone would be considered a complete search strategy (MPEP §904.02). A recommended search strategy is a couple of the most relevant subclasses, searched by themselves, viewing each document or combined in a text search with a few relevant terms. A larger subset of subclasses can be combined with more search terms.

These strategies should (or rough equivalent thereof) be preformed on a database that includes US Patents, US PG Pubs, Foreign Patents and Non Patent Literature.

Petitioner should review all claim limitation, especially those asserted as patentable distinctions from the cited references to ensure that the search covers these concepts, and update the search and/or provide any clarification if deemed necessary.

DECISION

For the above-stated reasons, the petition is **DISMISSED**. The application will therefore be taken up by the examiner for action in its regular turn.

Petitioner is given a single opportunity to perfect the petition. Any request for reconsideration of this decision must be submitted within 1 (one) month or 30 (thirty) days, whichever is longer, (no extension of time under 37 CFR 1.136(a)) from the date of this decision in order to be considered timely. Any request for reconsideration must address the deficiencies indicated above.

Petitioner is reminded that, upon granting of the special status of the application on request for reconsideration, the application will be processed expeditiously. However, due to the dismissal of the instant petition, examination may not be completed within twelve months of the filing date of the application.

Any inquiry regarding this decision should be directed the undersigned whose telephone number is (571) 272-4147.

If attempts to reach the undersigned by telephone are unsuccessful, Tod Swann, Quality Assurance Specialist, can be reached at (571) 272-3612.

/bp/

Kim Huynh,
Quality Assurance Specialist
Technology Center 2400
Network, Multiplexing, Cable and Security

UNITED STATES PATENT AND TRADEMARK OFFICE

COMMISSIONER FOR PATENTS
UNITED STATES PATENT AND TRADEMARK OFFICE
WASHINGTON, DC 20231
www.uspto.gov

MAILED

MAR 16 2009

TECHNOLOGY CENTER 2100

IBM CORPORATION (ACCSP)
c/o Suiter Swantz pc llo
14301 FNB Parkway, Suite 220
Omaha NE 68154

In re Application of: Fioretti, Giuseppe et al.
Serial No.: **12/193,127**
Filed: August 18, 2008
Docket: FR920080179US1
For: METHOD FOR TRACKING LOCAL STORAGE OF WEB PAGES

DECISION ON PETITION TO MAKE SPECIAL FOR NEW APPLICATION UNDER 37 C.F.R. § 1.102 & M.P.E.P. § 708.02

This is a decision on the renewed petition filed on March 03, 2009 to make the above-identified application special for accelerated examination procedure under 37 C.F.R. § 1.102(d). The original petition, submitted on August 18, 2008 was dismissed in the decision mailed on February 06, 2009.

The renewed petition to make the application special is **GRANTED** as the new pre-examination search document meets the requirement of MPEP 708.02 conditions II 5.2 with respect to a complete search that were deficient in the original petition. The Petitioner indicates that an updated search was performed. A new Information Disclosure Statement was filed. It is taken that the new reference(s) were found as the result of the updated search.

The application is eligible for accelerated examination and the petition complies with the conditions for granting the application special status pursuant to the "Change to Practice for Petitions in Patent Applications to Make Special and for Accelerated Examination" issued June 26, 2006, in the Federal Register. (71 Fed. Reg. 36323).

The prosecution of the instant application will be conducted expeditiously according to the following guidelines.

1. The application will be docketed to an examiner and taken up for action within two weeks of the date of this decision.

2. Restriction Practice:
   If the examiner determines that the claims are not directed to a single invention, a telephone request to elect one single invention will be made pursuant to MPEP 812.01. As a prerequisite to the grant of this petition, the applicant has agreed to make an oral election, by telephone, without traverse. If the applicant refuses to make an election without traverse, or the examiner cannot reach the applicant after a reasonable effort, the examiner will treat the first claimed invention (invention defined by claim 1) as having being constructively elected without traverse for examination.

3. Office action:

If it is determined that, after appropriate consultation, there is a potential rejection or any other issue to be addressed, the examiner will telephone the applicant and arrange an interview to discuss and resolve the issue. An Office action, other than a Notice of Allowance and Fee(s) Due (Notice of Allowance), will not be issued unless either: 1) an interview was conducted but did not result in agreed to action that places the application in condition for allowance, or, 2) a determination is made that an interview would be unlikely to result in the application being placed in condition for allowance, and 3) an internal conference has been held to review any rejection of any claim.

4. Time for Reply:
An Office action other than a Notice of Allowance or a final Office action will set a shortened statutory period of one month or thirty days, whichever is longer, for reply with no extension of time available under 37 CFR 1.136(a). Failure to timely file a reply within this non-extendible period for reply will result in the abandonment of the application.

5. Reply by Applicant:
A timely reply to an Office action other than the Notice of Allowance must be submitted electronically via EFS or EFS-web and limited to addressing the rejections, objections and requirement made. Any amendment that attempts to: 1) add claims which would result in more than three pending independent claims or more than twenty pending total claims; 2) present claims not encompassed by the pre-examination search or an updated accelerated examination support document; or 3) present claims that are directed a non-elected invention or an invention other than that previously claimed and examined in the application, will be treated as not fully responsive and will not be entered.

   For any amendment to the claims (including any new claim) that is not encompassed by the accelerated examination support document, applicant must provide an updated accelerated examination support document that encompasses the amended or new claims at the time of filing of the amendment.

   To proceed expeditiously with the examination, it is recommended that a reply with amendments made to any claim or with any new claim being added be accompanied by an updated accelerated examination support document or a statement explaining how the amended or new claim is supported by the original accelerated examination support document.

6. Information Disclosure Statement (IDS):
Any IDS filed during prosecution must be submitted electronically via EFS or EFS-web, accompanied by an updated accelerated examination support document, and be in compliance with 37 CFR 1.97 and 1.98.

7. Post-Allowance Processing:
To expedite processing of the allowed application into a patent, the applicant must: 1) pay the required fees within one month of the date of the Notice of Allowance, and 2) not file any post allowance papers not required by the Office. In no event may the issue fee be paid and accepted later than three months from the date of the Notice of Allowance.

8. After-Final and Appeal Procedures:
To expedite prosecution, after receiving the final Office action, applicant must: 1) promptly file a notice of appeal, an appeal brief and appeal fees; and 2) not request a pre-appeal brief conference.

Any amendment, affidavit or other evidence filed after final Office action must comply with applicable rules and the requirements outlined in numbered paragraphs 5 and 6 above.

On appeal, the application will proceed according to normal appeal procedures. After appeal, the application will again be treated special.

9. Proceedings Outside the Normal Examination Process:
If the application becomes involved in a proceeding that is outside the normal examination process (e.g., a secrecy order, national security review, interference proceeding, petitions under 37 CFR 1.181, 182 or 183), the application will be treated special before and after such proceeding.

10. Final Disposition:
The twelve month goal of this accelerated examination procedure ends with a final disposition. The mailing of a final Office action, a Notice of Allowance, the filing of a Notice of Appeal, or the filing of a Request for Continued Examination (RCE) is the final disposition.

If, during prosecution, a paper is not filed electronically using EFS-web, a reply is filed but is not fully responsive, the application is involved in an appeal, or a proceeding outside normal examination process, the application will still be examined expeditiously, however, the final disposition may occur more than twelve months from the filing of the application.

Any inquiry regarding this decision should be directed the undersigned whose telephone number is (571) 272-3902. If attempts to reach the undersigned by telephone are unsuccessful, Kim Huynh, Quality Assurance Specialist, can be reached at (571) 272-4147.

/thn/

Beatriz Prieto

Beatriz Prieto, WQAS
Technology Center 2400
Network, Multiplexing, Cable and Security

UNITED STATES PATENT AND TRADEMARK OFFICE

UNITED STATES DEPARTMENT OF COMMERCE
United States Patent and Trademark Office
Address: COMMISSIONER FOR PATENTS
P.O. Box 1450
Alexandria, Virginia 22313-1450
www.uspto.gov

APPLICATION NO.	FILING DATE	FIRST NAMED INVENTOR	ATTORNEY DOCKET NO.	CONFIRMATION NO.
12/193,127	08/18/2008	Giuseppe Fioretti	FR920080179US1	4268

82294 7590 03/16/2009
IBM CORPORATION (ACCSP)
c/o Suiter Swantz pc llo
14301 FNB Parkway, Suite 220
Omaha, NE 68154

EXAMINER
CALDWELL, ANDREW T

ART UNIT	PAPER NUMBER
2442	

MAIL DATE	DELIVERY MODE
03/16/2009	PAPER

Please find below and/or attached an Office communication concerning this application or proceeding.

The time period for reply, if any, is set in the attached communication.

UNITED STATES PATENT AND TRADEMARK OFFICE

UNITED STATES DEPARTMENT OF COMMERCE
United States Patent and Trademark Office
Address: COMMISSIONER FOR PATENTS
P.O. Box 1450
Alexandria, Virginia 22313-1450
www.uspto.gov

APPLICATION NO.	FILING DATE	FIRST NAMED INVENTOR	ATTORNEY DOCKET NO.	CONFIRMATION NO.
12/193,132	08/18/2008	Terry L. Marker	H0016340-02	4276

23490 7590 02/05/2010
HONEYWELL/UOP
PATENT SERVICES
101 COLUMBIA DRIVE
P O BOX 2245 MAIL STOP AB/2B
MORRISTOWN, NJ 07962

EXAMINER

ART UNIT	PAPER NUMBER
1797	

NOTIFICATION DATE	DELIVERY MODE
02/05/2010	ELECTRONIC

Please find below and/or attached an Office communication concerning this application or proceeding.

The time period for reply, if any, is set in the attached communication.

Notice of the Office communication was sent electronically on above-indicated "Notification Date" to the following e-mail address(es):

IP.Docketclerk@uop.com
PatentServices-US@Honeywell.com
IP.Docketclerk@Honeywell.com

UNITED STATES PATENT AND TRADEMARK OFFICE

Commissioner for Patents
United States Patent and Trademark Office
P.O. Box 1450
Alexandria, VA 22313-1450
www.uspto.gov

FEB 05 2010

HONEYWELL/UOP
PATENT SERVICES
101 COLUMBIA DRIVE
P O BOX 2245 MAIL STOP AB/2B
MORRISTOWN NJ 07962

In re Application of	:	
Marker et al.	:	DECISION ON PETITION
Application No. 12/193,132	:	TO MAKE SPECIAL UNDER
Filed: 8/18/2009	:	THE GREEN TECHNOLOGY
Attorney Docket No. **H0016340-02**	:	PILOT PROGRAM

This is a decision on the petition under 37 CFR 1.102, filed 12/11/2009, to make the above-identified application special under the pilot program for applications pertaining to Green Technologies as set forth 74 Federal Register Notice 64666 (December 8, 2009).

The petition is **DISMISSED**.

If reconsideration of this decision is desired, a petition for reconsideration must be filed within ONE (1) MONTH OR THIRTY (30) DAYS from the mail date of this decision, whichever is longer. No extension of this time limit can be granted under 37 CFR 1.136(a) or (b). The petition for reconsideration should include an exhaustive attempt to provide the lacking item(s) noted below, since, after a decision on the petition for reconsideration, no further reconsideration or review of the matter will be undertaken by the Director.

A grantable petition to make an application special under 37 CFR 1.102 and the pilot program as set forth in 74 FR 64666 must be directed to a nonprovisional application filed under 35 USC 111(a) or be a national stage entry under 35 USC 371, exclusive of any reissue applications and be filed prior to the date of the notice, December 8, 2009.

In order to qualify for special status, the following requirements must be met. 1) The application must be classified in one of the eligible US classifications listed in section VI of the notice. 2) The application must have no more than 3 independent claims and no more than 20 total claims. 3) The application must not contain any multiple dependent claims. 4) The petition must state the basis for seeking special status, i.e., the claimed invention either: A) materially enhances the quality of the environment or B) materially contributes to: i) the discovery or development of renewable energy resources, ii) the more efficient utilization and conservation of energy resources, or iii) greenhouse gas emission reduction. 5) If the disclosure is not clear on its face

that the claimed invention materially contributes under category (A) or (B), the petition must be accompanied by a statement by the applicant, assignee, or an attorney/agent registered to practice before the Office explaining how the materiality standard is met. 6) A statement that applicant will agree to make an election without traverse in a telephonic interview if a restriction requirement is made by the examiner. 7) The petition to make special must be filed electronically. 8) The petition must be filed at least one day prior to the date that a first Office Action appears in the Patent Application Information Retrieval (PAIR) system. 9) The petition must be accompanied by a request for early publication in compliance with 37 CFR 1.219 and include the publication fee as set forth in 37 CFR 1.18(d).

The requirement for a fee for consideration of the petition to make special for applications pertaining to Green Technologies has been waived.

The petition lacks item(s) 1.

In regard to item 1, petitioner should note that this application has been classified in an area (USPC 44/307.000) that is not one of the eligible US classifications listed in section VI of the notice. Therefore, this application is not eligible for the Pilot Program. The classification limitations are purposefully made to be narrow for the Pilot Program; however, these may be expanded based upon the success of the Pilot Program. Petitioner may file a preliminary amendment that would cause this application to be classified elsewhere. However, while petitioner may suggest a classification (see, e.g., MPEP 708.02(a)(VII)(C)), the application will be assigned to the most appropriate classification based upon current U.S. classification guidelines. Furthermore, a petition for the Pilot Program should not be filed until and unless all of the requirements set forth in the Notice are met; i.e., a petition should not be filed for an application that is currently classified outside the eligible classifications set forth in the Notice.

Any reconsideration of this decision should be submitted through the USPTO electronic filing system, EFS-Web, and selecting the document description of "Petition for Green Tech Pilot" on the EFS-Web screen.

Telephone inquiries concerning this decision should be directed to Tom Dunn at 571-272-1171.

The application is being forwarded to the Technology Center Art Unit 1797 for action in its regular turn.

/Tom Dunn/

Tom Dunn
Quality Assurance Specialist
Technology Center 1700

UNITED STATES PATENT AND TRADEMARK OFFICE

UNITED STATES DEPARTMENT OF COMMERCE
United States Patent and Trademark Office
Address: COMMISSIONER FOR PATENTS
P.O. Box 1450
Alexandria, Virginia 22313-1450
www.uspto.gov

APPLICATION NO.	FILING DATE	FIRST NAMED INVENTOR	ATTORNEY DOCKET NO.	CONFIRMATION NO.
12/193,132	08/18/2008	Terry L. Marker	H0016340-02	4276

23490 7590 03/17/2010
HONEYWELL/UOP
PATENT SERVICES
101 COLUMBIA DRIVE
P O BOX 2245 MAIL STOP AB/2B
MORRISTOWN, NJ 07962

EXAMINER

ART UNIT	PAPER NUMBER
1797	

NOTIFICATION DATE	DELIVERY MODE
03/17/2010	ELECTRONIC

Please find below and/or attached an Office communication concerning this application or proceeding.

The time period for reply, if any, is set in the attached communication.

Notice of the Office communication was sent electronically on above-indicated "Notification Date" to the following e-mail address(es):

IP.Docketclerk@uop.com
PatentServices-US@Honeywell.com
IP.Docketclerk@Honeywell.com

UNITED STATES PATENT AND TRADEMARK OFFICE

Commissioner for Patents
United States Patent and Trademark Office
P.O. Box 1450
Alexandria, VA 22313-1450
www.uspto.gov

HONEYWELL/UOP
PATENT SERVICES
101 COLUMBIA DRIVE
P O BOX 2245 MAIL STOP AB/2B
MORRISTOWN NJ 07962

MAR 17 2010

In re Application of	:	
Marker et al.	:	DECISION ON PETITION
Application No. 12/193,132	:	TO MAKE SPECIAL UNDER
Filed: 8/18/2008	:	THE GREEN TECHNOLOGY
Attorney Docket No. **H0016340-02**	:	PILOT PROGRAM

This is a decision on the request for reconsideration, filed 3/5/2010, to make the above-identified application special under the pilot program for applications pertaining to Green Technologies as set forth 74 Federal Register Notice 64666 (December 8, 2009).

The petition is **DENIED**.

A grantable petition to make an application special under 37 CFR 1.102 and the pilot program as set forth in 74 FR 64666 must be directed to a nonprovisional application filed under 35 USC 111(a) or be a national stage entry under 35 USC 371, exclusive of any reissue applications and be filed prior to the date of the notice, December 8, 2009.

In order to qualify for special status, the following requirements must be met. 1) The application must be classified in one of the eligible US classifications listed in section VI of the notice. 2) The application must have no more than 3 independent claims and no more than 20 total claims. 3) The application must not contain any multiple dependent claims. 4) The petition must state the basis for seeking special status, i.e., the claimed invention either: A) materially enhances the quality of the environment or B) materially contributes to: i) the discovery or development of renewable energy resources, ii) the more efficient utilization and conservation of energy resources, or iii) greenhouse gas emission reduction. 5) If the disclosure is not clear on its face that the claimed invention materially contributes under category (A) or (B), the petition must be accompanied by a statement by the applicant, assignee, or an attorney/agent registered to practice before the Office explaining how the materiality standard is met. 6) A statement that applicant will agree to make an election without traverse in a telephonic interview if a restriction requirement is made by the examiner. 7) The petition to make special must be filed electronically. 8) The petition must be filed at least one day prior to the date that a first Office Action appears in the Patent Application Information Retrieval (PAIR) system. 9) The petition

must be accompanied by a request for early publication in compliance with 37 CFR 1.219 and include the publication fee as set forth in 37 CFR 1.18(d).

The requirement for a fee for consideration of the petition to make special for applications pertaining to Green Technologies has been waived.

The petition lacks item(s) 1.

Applicants arguments regarding the suggested classification have been considered but are not deemed to be persuasive. While applications are routinely cross referenced in multiple related classes/subclasses, the Original classification is determined by the following factors:

1) Hierarchy of categories of subject matter (e.g. method of using claims determine classification over article claims).

2) Superiority of types of subject matter (e.g. chemical subject matter controls over electrical subject matter).

3) Class superiority. All classes in the US Classification system are assigned a relative superiority. This listing of all classes arranged by their relative superiority can be found on the USPTO website on the Classification Home Page under the link entitled "Classes Within the US Classification System Arranged by Related Subjects." Within each class, the highest appropriate subclass will also be used to determine original classification.

Based on the criteria above, the current Original classification is deemed to be appropriate.

Telephone inquiries concerning this decision should be directed to Tom Dunn at 571-272-1171.

The application is being forwarded to the Technology Center Art Unit 1797 for action in its regular turn.

/Tom Dunn/

Tom Dunn
Quality Assurance Specialist
Technology Center 1700

UNITED STATES PATENT AND TRADEMARK OFFICE

Commissioner for Patents
United States Patent and Trademark Office
P.O. Box 1450
Alexandria, VA 22313-1450
www.uspto.gov

HONEYWELL/UOP
PATENT SERVICES
101 COLUMBIA DRIVE
P O BOX 2245 MAIL STOP AB/2B
MORRISTOWN NJ 07962

COPY MAILED

DEC 2 2 2009

OFFICE OF PETITIONS

In re Application of
TERRY L MARKER et al.
Application No. 12/193,149
Filed: August 18, 2008
Attorney Docket No. H0015370-01

DECISION ON PETITION
TO MAKE SPECIAL UNDER
37 CFR 1.102(c)(2)

This is a decision on the petition under 37 CFR 1.102(c)(2), filed December 9, 2009, to make the above-identified application special under the pilot program for applications pertaining to Green Technologies as set forth 74 Federal Register Notice 64666 (December 8, 2009).

The petition is **DISMISSED**.

If reconsideration of this decision is desired, a petition for reconsideration must be filed within ONE (1) MONTH OR THIRTY (30) DAYS from the mail date of this decision, whichever is longer. No extension of this time limit can be granted under 37 CFR 1.136(a) or (b). The petition for reconsideration should include an exhaustive attempt to provide the lacking item(s) noted below, since, after a decision on the petition for reconsideration, no further reconsideration or review of the matter will be undertaken by the Director.

A grantable petition to make an application special under 37 CFR 1.102(c)(2) and the pilot program as set forth in 74 FR 64666 must be directed to a nonprovisional application filed under 35 USC 111(a) or be a national stage entry under 35 USC 371, exclusive of any reissue applications and be filed prior to the date of the notice, December 8, 2009.

In order to qualify for special status, the following requirements must be met. 1) The application must be classified in one of the eligible US classifications listed in section VI of the notice. 2) The application must have no more than 3 independent claims and no more than 20 total claims. 3) The application must not contain any multiple dependent claims. 4) The application must be directed to a single invention that either: A) materially enhances the quality of the environment or B) that materially contributes to: i) the discovery or development of renewable energy resources, ii) the more efficient utilization and conservation of energy resources, or iii) greenhouse gas emission reduction. If the disclosure is not clear on its face that the claimed invention materially contributes under category (A) or (B), the petition must be accompanied by

a statement by the applicant, assignee, or an attorney/agent registered to practice before the Office explaining how the materiality standard is met. 5) A statement that applicant will agree to make an election without traverse in a telephonic interview if a restriction requirement is made by the examiner. 6) The petition to make special must be filed electronically. 7) The petition must be filed at least one day prior to the date that a first Office Action appears in the Patent Application Information Retrieval (PAIR) system. 8) The petition must be accompanied by a request for early publication in compliance with 37 CFR 1.219 and include the publication fee as set forth in 37 CFR 1.18(d).

The requirement for a fee for consideration of the petition to make special for applications pertaining to Green Technologies has been waived.

The petition lacks item(s) 1 as explained below.

This application has been classified in an area (USPC 585/362) that is not one of the eligible US classifications listed in section VI of the notice. Therefore, this application is not eligible for the Pilot Program. The classification limitations are purposefully made to be narrow for the Pilot Program; however, these may be expanded based upon the success of the Pilot Program. Petitioner may file a preliminary amendment that would cause this application to be classified elsewhere. However, while petitioner may suggest a classification (see, e.g., MPEP 708.02(a)(VII)(C)), the application will be assigned to the most appropriate classification based upon current U.S. classification guidelines. Furthermore, a petition for the Pilot Program should not be filed until and unless all of the requirements set forth in the Notice are met; i.e., a petition should not be filed for an application that is currently classified outside the eligible classifications set forth in the Notice.

Further correspondence with respect to this matter should be addressed as follows:

By Mail: Mail Stop PETITION
Commissioner for Patents
P. O. Box 1450
Alexandria, VA 22313-1450

By hand: U. S. Patent and Trademark Office
Customer Service Window, Mail Stop Petitions
Randolph Building
401 Dulany Street
Alexandria, VA 22314

By FAX: (571) 273-8300

Telephone inquiries concerning this decision should be directed to the undersigned at 571-272-4914.

All other inquiries concerning either the examination or status of the application should be directed to the Technology Center.

The application is being forwarded to the Technology Center Art Unit 1797 for action in its regular turn.

Ramesh Krishnamurthy
Petitions Examiner
Office of Petitions

UNITED STATES PATENT AND TRADEMARK OFFICE

UNITED STATES DEPARTMENT OF COMMERCE
United States Patent and Trademark Office
Address: COMMISSIONER FOR PATENTS
P.O. Box 1450
Alexandria, Virginia 22313-1450
www.uspto.gov

APPLICATION NO.	FILING DATE	FIRST NAMED INVENTOR	ATTORNEY DOCKET NO.	CONFIRMATION NO.
12/193,156	08/18/2008	Tom N. Kalnes	H0013952-02	4315

23490 7590 02/03/2010
HONEYWELL/UOP
PATENT SERVICES
101 COLUMBIA DRIVE
P O BOX 2245 MAIL STOP AB/2B
MORRISTOWN, NJ 07962

EXAMINER

ART UNIT	PAPER NUMBER
1797	

NOTIFICATION DATE	DELIVERY MODE
02/03/2010	ELECTRONIC

Please find below and/or attached an Office communication concerning this application or proceeding.

The time period for reply, if any, is set in the attached communication.

Notice of the Office communication was sent electronically on above-indicated "Notification Date" to the following e-mail address(es):

IP.Docketclerk@uop.com
PatentServices-US@Honeywell.com
IP.Docketclerk@Honeywell.com

UNITED STATES PATENT AND TRADEMARK OFFICE

Commissioner for Patents
United States Patent and Trademark Office
P.O. Box 1450
Alexandria, VA 22313-1450
www.uspto.gov

FEB 03 2010

HONEYWELL/UOP
PATENT SERVICES
101 COLUMBIA DRIVE
P O BOX 2245 MAIL STOP AB/2B
MORRISTOWN NJ 07962

In re Application of Kalnes et al. Application No. 12/193,156 Filed: 8/18/2008 Attorney Docket No. **H0013952-02**	DECISION ON PETITION TO MAKE SPECIAL UNDER THE GREEN TECHNOLOGY PILOT PROGRAM

This is a decision on the petition under 37 CFR 1.102, filed 12/10/2009, to make the above-identified application special under the pilot program for applications pertaining to Green Technologies as set forth 74 Federal Register Notice 64666 (December 8, 2009).

The petition is **DISMISSED**.

If reconsideration of this decision is desired, a petition for reconsideration must be filed within ONE (1) MONTH OR THIRTY (30) DAYS from the mail date of this decision, whichever is longer. No extension of this time limit can be granted under 37 CFR 1.136(a) or (b). The petition for reconsideration should include an exhaustive attempt to provide the lacking item(s) noted below, since, after a decision on the petition for reconsideration, no further reconsideration or review of the matter will be undertaken by the Director.

A grantable petition to make an application special under 37 CFR 1.102 and the pilot program as set forth in 74 FR 64666 must be directed to a nonprovisional application filed under 35 USC 111(a) or be a national stage entry under 35 USC 371, exclusive of any reissue applications and be filed prior to the date of the notice, December 8, 2009.

In order to qualify for special status, the following requirements must be met. 1) The application must be classified in one of the eligible US classifications listed in section VI of the notice. 2) The application must have no more than 3 independent claims and no more than 20 total claims. 3) The application must not contain any multiple dependent claims. 4) The petition must state the basis for seeking special status, i.e., the claimed invention either: A) materially enhances the quality of the environment or B) materially contributes to: i) the discovery or development of renewable energy resources, ii) the more efficient utilization and conservation of energy resources, or iii) greenhouse gas emission reduction. 5) If the disclosure is not clear on its face

that the claimed invention materially contributes under category (A) or (B), the petition must be accompanied by a statement by the applicant, assignee, or an attorney/agent registered to practice before the Office explaining how the materiality standard is met. 6) A statement that applicant will agree to make an election without traverse in a telephonic interview if a restriction requirement is made by the examiner. 7) The petition to make special must be filed electronically. 8) The petition must be filed at least one day prior to the date that a first Office Action appears in the Patent Application Information Retrieval (PAIR) system. 9) The petition must be accompanied by a request for early publication in compliance with 37 CFR 1.219 and include the publication fee as set forth in 37 CFR 1.18(d).

The requirement for a fee for consideration of the petition to make special for applications pertaining to Green Technologies has been waived.

The petition lacks item(s) 1.

In regard to item 1, petitioner should note that this application has been classified in an area (USPC 44/308.000) that is not one of the eligible US classifications listed in section VI of the notice. Therefore, this application is not eligible for the Pilot Program. The classification limitations are purposefully made to be narrow for the Pilot Program; however, these may be expanded based upon the success of the Pilot Program. Petitioner may file a preliminary amendment that would cause this application to be classified elsewhere. However, while petitioner may suggest a classification (see, e.g., MPEP 708.02(a)(VII)(C)), the application will be assigned to the most appropriate classification based upon current U.S. classification guidelines. Furthermore, a petition for the Pilot Program should not be filed until and unless all of the requirements set forth in the Notice are met; i.e., a petition should not be filed for an application that is currently classified outside the eligible classifications set forth in the Notice.

Any reconsideration of this decision should be submitted through the USPTO electronic filing system, EFS-Web, and selecting the document description of "Petition for Green Tech Pilot" on the EFS-Web screen.

Telephone inquiries concerning this decision should be directed to Tom Dunn at 571-272-1171.

The application is being forwarded to the Technology Center Art Unit 1797 for action in its regular turn.

/Tom Dunn/

Tom Dunn
Quality Assurance Specialist
Technology Center 1700

UNITED STATES PATENT AND TRADEMARK OFFICE

UNITED STATES DEPARTMENT OF COMMERCE
United States Patent and Trademark Office
Address: COMMISSIONER FOR PATENTS
P.O. Box 1450
Alexandria, Virginia 22313-1450
www.uspto.gov

APPLICATION NO.	FILING DATE	FIRST NAMED INVENTOR	ATTORNEY DOCKET NO.	CONFIRMATION NO.
12/193,156	08/18/2008	Tom N. Kalnes	H0013952-02	4315

23490 7590 03/17/2010
HONEYWELL/UOP
PATENT SERVICES
101 COLUMBIA DRIVE
P O BOX 2245 MAIL STOP AB/2B
MORRISTOWN, NJ 07962

EXAMINER

ART UNIT	PAPER NUMBER
1797	

NOTIFICATION DATE	DELIVERY MODE
03/17/2010	ELECTRONIC

Please find below and/or attached an Office communication concerning this application or proceeding.

The time period for reply, if any, is set in the attached communication.

Notice of the Office communication was sent electronically on above-indicated "Notification Date" to the following e-mail address(es):

IP.Docketclerk@uop.com
PatentServices-US@Honeywell.com
IP.Docketclerk@Honeywell.com

UNITED STATES PATENT AND TRADEMARK OFFICE

Commissioner for Patents
United States Patent and Trademark Office
P.O. Box 1450
Alexandria, VA 22313-1450
www.uspto.gov

HONEYWELL/UOP
PATENT SERVICES
101 COLUMBIA DRIVE
P O BOX 2245 MAIL STOP AB/2B
MORRISTOWN NJ 07962

MAR 17 2010

In re Application of	:	
Kalnes et al.	:	DECISION ON PETITION
Application No. 12/193,156	:	TO MAKE SPECIAL UNDER
Filed: 8/18/2008	:	THE GREEN TECHNOLOGY
Attorney Docket No. **H0013952-02**	:	PILOT PROGRAM

This is a decision on the request for reconsideration, filed 3/3/2010, to make the above-identified application special under the pilot program for applications pertaining to Green Technologies as set forth 74 Federal Register Notice 64666 (December 8, 2009).

The petition is **DENIED**.

A grantable petition to make an application special under 37 CFR 1.102 and the pilot program as set forth in 74 FR 64666 must be directed to a nonprovisional application filed under 35 USC 111(a) or be a national stage entry under 35 USC 371, exclusive of any reissue applications and be filed prior to the date of the notice, December 8, 2009.

In order to qualify for special status, the following requirements must be met. 1) The application must be classified in one of the eligible US classifications listed in section VI of the notice. 2) The application must have no more than 3 independent claims and no more than 20 total claims. 3) The application must not contain any multiple dependent claims. 4) The petition must state the basis for seeking special status, i.e., the claimed invention either: A) materially enhances the quality of the environment or B) materially contributes to: i) the discovery or development of renewable energy resources, ii) the more efficient utilization and conservation of energy resources, or iii) greenhouse gas emission reduction. 5) If the disclosure is not clear on its face that the claimed invention materially contributes under category (A) or (B), the petition must be accompanied by a statement by the applicant, assignee, or an attorney/agent registered to practice before the Office explaining how the materiality standard is met. 6) A statement that applicant will agree to make an election without traverse in a telephonic interview if a restriction requirement is made by the examiner. 7) The petition to make special must be filed electronically. 8) The petition must be filed at least one day prior to the date that a first Office Action appears in the Patent Application Information Retrieval (PAIR) system. 9) The petition

must be accompanied by a request for early publication in compliance with 37 CFR 1.219 and include the publication fee as set forth in 37 CFR 1.18(d).

The requirement for a fee for consideration of the petition to make special for applications pertaining to Green Technologies has been waived.

The petition lacks item(s) 1.

Applicants arguments regarding the suggested classification have been considered but are not deemed to be persuasive. While applications are routinely cross referenced in multiple related classes/subclasses, the Original classification is determined by the following factors:

1) Hierarchy of categories of subject matter (e.g. method of using claims determine classification over article claims).

2) Superiority of types of subject matter (e.g. chemical subject matter controls over electrical subject matter).

3) Class superiority. All classes in the US Classification system are assigned a relative superiority. This listing of all classes arranged by their relative superiority can be found on the USPTO website on the Classification Home Page under the link entitled "Classes Within the US Classification System Arranged by Related Subjects."

Based on the criteria above, the current Original classification is deemed to be appropriate.

Telephone inquiries concerning this decision should be directed to Tom Dunn at 571-272-1171.

The application is being forwarded to the Technology Center Art Unit 1797 for action in its regular turn.

/Tom Dunn/

Tom Dunn
Quality Assurance Specialist
Technology Center 1700

UNITED STATES PATENT AND TRADEMARK OFFICE

UNITED STATES DEPARTMENT OF COMMERCE
United States Patent and Trademark Office
Address: COMMISSIONER FOR PATENTS
P.O. Box 1450
Alexandria, Virginia 22313-1450
www.uspto.gov

APPLICATION NO.	FILING DATE	FIRST NAMED INVENTOR	ATTORNEY DOCKET NO.	CONFIRMATION NO.
12/193,161	08/18/2008	Terry L. Marker	H0017182-01	4324

23490 7590 02/05/2010
HONEYWELL/UOP
PATENT SERVICES
101 COLUMBIA DRIVE
P O BOX 2245 MAIL STOP AB/2B
MORRISTOWN, NJ 07962

EXAMINER

ART UNIT	PAPER NUMBER
1797	

NOTIFICATION DATE	DELIVERY MODE
02/05/2010	ELECTRONIC

Please find below and/or attached an Office communication concerning this application or proceeding.

The time period for reply, if any, is set in the attached communication.

Notice of the Office communication was sent electronically on above-indicated "Notification Date" to the following e-mail address(es):

IP.Docketclerk@uop.com
PatentServices-US@Honeywell.com
IP.Docketclerk@Honeywell.com

UNITED STATES PATENT AND TRADEMARK OFFICE

Commissioner for Patents
United States Patent and Trademark Office
P.O. Box 1450
Alexandria, VA 22313-1450
www.uspto.gov

HONEYWELL/UOP
PATENT SERVICES
101 COLUMBIA DRIVE
P O BOX 2245 MAIL STOP AB/2B
MORRISTOWN NJ 07962

FEB 05 2010

In re Application of	:	
Marker et al.	:	DECISION ON PETITION
Application No. 12/193,161	:	TO MAKE SPECIAL UNDER
Filed: 8/18/2008	:	THE GREEN TECHNOLOGY
Attorney Docket No. **H0017182-01**	:	PILOT PROGRAM

This is a decision on the petition under 37 CFR 1.102, filed 12/11/2009, to make the above-identified application special under the pilot program for applications pertaining to Green Technologies as set forth 74 Federal Register Notice 64666 (December 8, 2009).

The petition is **DISMISSED**.

If reconsideration of this decision is desired, a petition for reconsideration must be filed within ONE (1) MONTH OR THIRTY (30) DAYS from the mail date of this decision, whichever is longer. No extension of this time limit can be granted under 37 CFR 1.136(a) or (b). The petition for reconsideration should include an exhaustive attempt to provide the lacking item(s) noted below, since, after a decision on the petition for reconsideration, no further reconsideration or review of the matter will be undertaken by the Director.

A grantable petition to make an application special under 37 CFR 1.102 and the pilot program as set forth in 74 FR 64666 must be directed to a nonprovisional application filed under 35 USC 111(a) or be a national stage entry under 35 USC 371, exclusive of any reissue applications and be filed prior to the date of the notice, December 8, 2009.

In order to qualify for special status, the following requirements must be met. 1) The application must be classified in one of the eligible US classifications listed in section VI of the notice. 2) The application must have no more than 3 independent claims and no more than 20 total claims. 3) The application must not contain any multiple dependent claims. 4) The petition must state the basis for seeking special status, i.e., the claimed invention either: A) materially enhances the quality of the environment or B) materially contributes to: i) the discovery or development of renewable energy resources, ii) the more efficient utilization and conservation of energy resources, or iii) greenhouse gas emission reduction. 5) If the disclosure is not clear on its face

that the claimed invention materially contributes under category (A) or (B), the petition must be accompanied by a statement by the applicant, assignee, or an attorney/agent registered to practice before the Office explaining how the materiality standard is met. 6) A statement that applicant will agree to make an election without traverse in a telephonic interview if a restriction requirement is made by the examiner. 7) The petition to make special must be filed electronically. 8) The petition must be filed at least one day prior to the date that a first Office Action appears in the Patent Application Information Retrieval (PAIR) system. 9) The petition must be accompanied by a request for early publication in compliance with 37 CFR 1.219 and include the publication fee as set forth in 37 CFR 1.18(d).

The requirement for a fee for consideration of the petition to make special for applications pertaining to Green Technologies has been waived.

The petition lacks item(s) 1.

In regard to item 1, petitioner should note that this application has been classified in an area (USPC 44/308.000) that is not one of the eligible US classifications listed in section VI of the notice. Therefore, this application is not eligible for the Pilot Program. The classification limitations are purposefully made to be narrow for the Pilot Program; however, these may be expanded based upon the success of the Pilot Program. Petitioner may file a preliminary amendment that would cause this application to be classified elsewhere. However, while petitioner may suggest a classification (see, e.g., MPEP 708.02(a)(VII)(C)), the application will be assigned to the most appropriate classification based upon current U.S. classification guidelines. Furthermore, a petition for the Pilot Program should not be filed until and unless all of the requirements set forth in the Notice are met; i.e., a petition should not be filed for an application that is currently classified outside the eligible classifications set forth in the Notice.

Any reconsideration of this decision should be submitted through the USPTO electronic filing system, EFS-Web, and selecting the document description of "Petition for Green Tech Pilot" on the EFS-Web screen.

Telephone inquiries concerning this decision should be directed to Tom Dunn at 571-272-1171.

The application is being forwarded to the Technology Center Art Unit 1797 for action in its regular turn.

/Tom Dunn/

Tom Dunn
Quality Assurance Specialist
Technology Center 1700

UNITED STATES PATENT AND TRADEMARK OFFICE

UNITED STATES DEPARTMENT OF COMMERCE
United States Patent and Trademark Office
Address: COMMISSIONER FOR PATENTS
P.O. Box 1450
Alexandria, Virginia 22313-1450
www.uspto.gov

APPLICATION NO.	FILING DATE	FIRST NAMED INVENTOR	ATTORNEY DOCKET NO.	CONFIRMATION NO.
12/193,161	08/18/2008	Terry L. Marker	H0017182-01	4324

23490 7590 03/17/2010
HONEYWELL/UOP
PATENT SERVICES
101 COLUMBIA DRIVE
P O BOX 2245 MAIL STOP AB/2B
MORRISTOWN, NJ 07962

EXAMINER

ART UNIT	PAPER NUMBER
1797	

NOTIFICATION DATE	DELIVERY MODE
03/17/2010	ELECTRONIC

Please find below and/or attached an Office communication concerning this application or proceeding.

The time period for reply, if any, is set in the attached communication.

Notice of the Office communication was sent electronically on above-indicated "Notification Date" to the following e-mail address(es):

IP.Docketclerk@uop.com
PatentServices-US@Honeywell.com
IP.Docketclerk@Honeywell.com

UNITED STATES PATENT AND TRADEMARK OFFICE

Commissioner for Patents
United States Patent and Trademark Office
P.O. Box 1450
Alexandria, VA 22313-1450
www.uspto.gov

HONEYWELL/UOP
PATENT SERVICES
101 COLUMBIA DRIVE
P O BOX 2245 MAIL STOP AB/2B
MORRISTOWN NJ 07962

MAR 17 2010

In re Application of	:	
Marker et al.	:	DECISION ON PETITION
Application No. 12/193,161	:	TO MAKE SPECIAL UNDER
Filed: 8/18/2008	:	THE GREEN TECHNOLOGY
Attorney Docket No. **H0017182-01**	:	PILOT PROGRAM

This is a decision on the request for reconsideration, filed 3/5/2010, to make the above-identified application special under the pilot program for applications pertaining to Green Technologies as set forth 74 Federal Register Notice 64666 (December 8, 2009).

The petition is **DENIED**.

A grantable petition to make an application special under 37 CFR 1.102 and the pilot program as set forth in 74 FR 64666 must be directed to a nonprovisional application filed under 35 USC 111(a) or be a national stage entry under 35 USC 371, exclusive of any reissue applications and be filed prior to the date of the notice, December 8, 2009.

In order to qualify for special status, the following requirements must be met. 1) The application must be classified in one of the eligible US classifications listed in section VI of the notice. 2) The application must have no more than 3 independent claims and no more than 20 total claims. 3) The application must not contain any multiple dependent claims. 4) The petition must state the basis for seeking special status, i.e., the claimed invention either: A) materially enhances the quality of the environment or B) materially contributes to: i) the discovery or development of renewable energy resources, ii) the more efficient utilization and conservation of energy resources, or iii) greenhouse gas emission reduction. 5) If the disclosure is not clear on its face that the claimed invention materially contributes under category (A) or (B), the petition must be accompanied by a statement by the applicant, assignee, or an attorney/agent registered to practice before the Office explaining how the materiality standard is met. 6) A statement that applicant will agree to make an election without traverse in a telephonic interview if a restriction requirement is made by the examiner. 7) The petition to make special must be filed electronically. 8) The petition must be filed at least one day prior to the date that a first Office Action appears in the Patent Application Information Retrieval (PAIR) system. 9) The petition

must be accompanied by a request for early publication in compliance with 37 CFR 1.219 and include the publication fee as set forth in 37 CFR 1.18(d).

The requirement for a fee for consideration of the petition to make special for applications pertaining to Green Technologies has been waived.

The petition lacks item(s) 1.

Applicants arguments regarding the suggested classification have been considered but are not deemed to be persuasive. While applications are routinely cross referenced in multiple related classes/subclasses, the Original classification is determined by the following factors:

1) Hierarchy of categories of subject matter (e.g. method of using claims determine classification over article claims).

2) Superiority of types of subject matter (e.g. chemical subject matter controls over electrical subject matter).

3) Class superiority. All classes in the US Classification system are assigned a relative superiority. This listing of all classes arranged by their relative superiority can be found on the USPTO website on the Classification Home Page under the link entitled "Classes Within the US Classification System Arranged by Related Subjects." Within each class, the highest appropriate subclass will also be used to determine original classification.

Based on the criteria above, the current Original classification is deemed to be appropriate.

Telephone inquiries concerning this decision should be directed to Tom Dunn at 571-272-1171.

The application is being forwarded to the Technology Center Art Unit 1797 for action in its regular turn.

/Tom Dunn/

Tom Dunn
Quality Assurance Specialist
Technology Center 1700

UNITED STATES PATENT AND TRADEMARK OFFICE

UNITED STATES DEPARTMENT OF COMMERCE
United States Patent and Trademark Office
Address: COMMISSIONER FOR PATENTS
P.O. Box 1450
Alexandria, Virginia 22313-1450
www.uspto.gov

APPLICATION NO.	FILING DATE	FIRST NAMED INVENTOR	ATTORNEY DOCKET NO.	CONFIRMATION NO.
12/193,170	08/18/2008	Tom N. Kalnes	H0013968-01	4347

23490 7590 02/05/2010
HONEYWELL/UOP
PATENT SERVICES
101 COLUMBIA DRIVE
P O BOX 2245 MAIL STOP AB/2B
MORRISTOWN, NJ 07962

EXAMINER

ART UNIT	PAPER NUMBER
1797	

NOTIFICATION DATE	DELIVERY MODE
02/05/2010	ELECTRONIC

Please find below and/or attached an Office communication concerning this application or proceeding.

The time period for reply, if any, is set in the attached communication.

Notice of the Office communication was sent electronically on above-indicated "Notification Date" to the following e-mail address(es):

IP.Docketclerk@uop.com
PatentServices-US@Honeywell.com
IP.Docketclerk@Honeywell.com

UNITED STATES PATENT AND TRADEMARK OFFICE

Commissioner for Patents
United States Patent and Trademark Office
P.O. Box 1450
Alexandria, VA 22313-1450
www.uspto.gov

FEB 05 2010

HONEYWELL/UOP
PATENT SERVICES
101 COLUMBIA DRIVE
P O BOX 2245 MAIL STOP AB/2B
MORRISTOWN NJ 07962

In re Application of	:	
Kalnes et al.	:	DECISION ON PETITION
Application No. 12/193,170	:	TO MAKE SPECIAL UNDER
Filed: 8/18/2008	:	THE GREEN TECHNOLOGY
Attorney Docket No. **H0013968-01**	:	PILOT PROGRAM

This is a decision on the petition under 37 CFR 1.102, filed 12/11/2009, to make the above-identified application special under the pilot program for applications pertaining to Green Technologies as set forth 74 Federal Register Notice 64666 (December 8, 2009).

The petition is **DISMISSED**.

If reconsideration of this decision is desired, a petition for reconsideration must be filed within ONE (1) MONTH OR THIRTY (30) DAYS from the mail date of this decision, whichever is longer. No extension of this time limit can be granted under 37 CFR 1.136(a) or (b). The petition for reconsideration should include an exhaustive attempt to provide the lacking item(s) noted below, since, after a decision on the petition for reconsideration, no further reconsideration or review of the matter will be undertaken by the Director.

A grantable petition to make an application special under 37 CFR 1.102 and the pilot program as set forth in 74 FR 64666 must be directed to a nonprovisional application filed under 35 USC 111(a) or be a national stage entry under 35 USC 371, exclusive of any reissue applications and be filed prior to the date of the notice, December 8, 2009.

In order to qualify for special status, the following requirements must be met. 1) The application must be classified in one of the eligible US classifications listed in section VI of the notice. 2) The application must have no more than 3 independent claims and no more than 20 total claims. 3) The application must not contain any multiple dependent claims. 4) The petition must state the basis for seeking special status, i.e., the claimed invention either: A) materially enhances the quality of the environment or B) materially contributes to: i) the discovery or development of renewable energy resources, ii) the more efficient utilization and conservation of energy resources, or iii) greenhouse gas emission reduction. 5) If the disclosure is not clear on its face

that the claimed invention materially contributes under category (A) or (B), the petition must be accompanied by a statement by the applicant, assignee, or an attorney/agent registered to practice before the Office explaining how the materiality standard is met. 6) A statement that applicant will agree to make an election without traverse in a telephonic interview if a restriction requirement is made by the examiner. 7) The petition to make special must be filed electronically. 8) The petition must be filed at least one day prior to the date that a first Office Action appears in the Patent Application Information Retrieval (PAIR) system. 9) The petition must be accompanied by a request for early publication in compliance with 37 CFR 1.219 and include the publication fee as set forth in 37 CFR 1.18(d).

The requirement for a fee for consideration of the petition to make special for applications pertaining to Green Technologies has been waived.

The petition lacks item(s) 1.

In regard to item 1, petitioner should note that this application has been classified in an area (USPC 44/307.000) that is not one of the eligible US classifications listed in section VI of the notice. Therefore, this application is not eligible for the Pilot Program. The classification limitations are purposefully made to be narrow for the Pilot Program; however, these may be expanded based upon the success of the Pilot Program. Petitioner may file a preliminary amendment that would cause this application to be classified elsewhere. However, while petitioner may suggest a classification (see, e.g., MPEP 708.02(a)(VII)(C)), the application will be assigned to the most appropriate classification based upon current U.S. classification guidelines. Furthermore, a petition for the Pilot Program should not be filed until and unless all of the requirements set forth in the Notice are met; i.e., a petition should not be filed for an application that is currently classified outside the eligible classifications set forth in the Notice.

Any reconsideration of this decision should be submitted through the USPTO electronic filing system, EFS-Web, and selecting the document description of "Petition for Green Tech Pilot" on the EFS-Web screen.

Telephone inquiries concerning this decision should be directed to Tom Dunn at 571-272-1171.

The application is being forwarded to the Technology Center Art Unit 1797 for action in its regular turn.

/Tom Dunn/

Tom Dunn
Quality Assurance Specialist
Technology Center 1700

UNITED STATES PATENT AND TRADEMARK OFFICE

UNITED STATES DEPARTMENT OF COMMERCE
United States Patent and Trademark Office
Address: COMMISSIONER FOR PATENTS
P.O. Box 1450
Alexandria, Virginia 22313-1450
www.uspto.gov

APPLICATION NO.	FILING DATE	FIRST NAMED INVENTOR	ATTORNEY DOCKET NO.	CONFIRMATION NO.
12/193,170	08/18/2008	Tom N. Kalnes	H0013968-01	4347

23490 7590 03/17/2010
HONEYWELL/UOP
PATENT SERVICES
101 COLUMBIA DRIVE
P O BOX 2245 MAIL STOP AB/2B
MORRISTOWN, NJ 07962

EXAMINER

ART UNIT	PAPER NUMBER
1797	

NOTIFICATION DATE	DELIVERY MODE
03/17/2010	ELECTRONIC

Please find below and/or attached an Office communication concerning this application or proceeding.

The time period for reply, if any, is set in the attached communication.

Notice of the Office communication was sent electronically on above-indicated "Notification Date" to the following e-mail address(es):

IP.Docketclerk@uop.com
PatentServices-US@Honeywell.com
IP.Docketclerk@Honeywell.com

UNITED STATES PATENT AND TRADEMARK OFFICE

Commissioner for Patents
United States Patent and Trademark Office
P.O. Box 1450
Alexandria, VA 22313-1450
www.uspto.gov

HONEYWELL/UOP
PATENT SERVICES
101 COLUMBIA DRIVE
P O BOX 2245 MAIL STOP AB/2B
MORRISTOWN NJ 07962

MAR 17 2010

In re Application of	:	
Marker et al.	:	DECISION ON PETITION
Application No. 12/193,170	:	TO MAKE SPECIAL UNDER
Filed: 8/18/2008	:	THE GREEN TECHNOLOGY
Attorney Docket No. **H0013968-01**	:	PILOT PROGRAM

This is a decision on the request for reconsideration, filed 3/5/2010, to make the above-identified application special under the pilot program for applications pertaining to Green Technologies as set forth 74 Federal Register Notice 64666 (December 8, 2009).

The petition is **DENIED**.

A grantable petition to make an application special under 37 CFR 1.102 and the pilot program as set forth in 74 FR 64666 must be directed to a nonprovisional application filed under 35 USC 111(a) or be a national stage entry under 35 USC 371, exclusive of any reissue applications and be filed prior to the date of the notice, December 8, 2009.

In order to qualify for special status, the following requirements must be met. 1) The application must be classified in one of the eligible US classifications listed in section VI of the notice. 2) The application must have no more than 3 independent claims and no more than 20 total claims. 3) The application must not contain any multiple dependent claims. 4) The petition must state the basis for seeking special status, i.e., the claimed invention either: A) materially enhances the quality of the environment or B) materially contributes to: i) the discovery or development of renewable energy resources, ii) the more efficient utilization and conservation of energy resources, or iii) greenhouse gas emission reduction. 5) If the disclosure is not clear on its face that the claimed invention materially contributes under category (A) or (B), the petition must be accompanied by a statement by the applicant, assignee, or an attorney/agent registered to practice before the Office explaining how the materiality standard is met. 6) A statement that applicant will agree to make an election without traverse in a telephonic interview if a restriction requirement is made by the examiner. 7) The petition to make special must be filed electronically. 8) The petition must be filed at least one day prior to the date that a first Office Action appears in the Patent Application Information Retrieval (PAIR) system. 9) The petition

must be accompanied by a request for early publication in compliance with 37 CFR 1.219 and include the publication fee as set forth in 37 CFR 1.18(d).

The requirement for a fee for consideration of the petition to make special for applications pertaining to Green Technologies has been waived.

The petition lacks item(s) 1.

Applicants arguments regarding the suggested classification have been considered but are not deemed to be persuasive. While applications are routinely cross referenced in multiple related classes/subclasses, the Original classification is determined by the following factors:

1) Hierarchy of categories of subject matter (e.g. method of using claims determine classification over article claims).

2) Superiority of types of subject matter (e.g. chemical subject matter controls over electrical subject matter).

3) Class superiority. All classes in the US Classification system are assigned a relative superiority. This listing of all classes arranged by their relative superiority can be found on the USPTO website on the Classification Home Page under the link entitled "Classes Within the US Classification System Arranged by Related Subjects." Within each class, the highest appropriate subclass will also be used to determine original classification.

Based on the criteria above, the current Original classification is deemed to be appropriate.

Telephone inquiries concerning this decision should be directed to Tom Dunn at 571-272-1171.

The application is being forwarded to the Technology Center Art Unit 1797 for action in its regular turn.

/Tom Dunn/

Tom Dunn
Quality Assurance Specialist
Technology Center 1700

UNITED STATES PATENT AND TRADEMARK OFFICE

Commissioner for Patents
United States Patent and Trademark Office
P.O. Box 1450
Alexandria, VA 22313-1450
www.uspto.gov

COPY MAILED
JAN 06 2010

HONEYWELL/UOP
PATENT SERVICES
101 COLUMBIA DRIVE
P O BOX 2245 MAIL STOP AB/2B
MORRISTOWN NJ 07962

In re Application of	:	
TOM N. KALNES et al.	:	
Application No. 12/193,176	:	DECISION ON PETITION
Filed: August 18, 2008	:	TO MAKE SPECIAL UNDER
Attorney Docket No. H0013966-01	:	37 CFR 1.102(c)(2)
	:	

This is a decision on the petition under 37 CFR 1.102(c)(2), filed December 11, 2009, to make the above-identified application special under the pilot program for applications pertaining to Green Technologies as set forth 74 Federal Register Notice 64666 (December 8, 2009).

The petition is **DISMISSED**.

If reconsideration of this decision is desired, a petition for reconsideration must be filed within ONE (1) MONTH OR THIRTY (30) DAYS from the mail date of this decision, whichever is longer. No extension of this time limit can be granted under 37 CFR 1.136(a) or (b). The petition for reconsideration should include an exhaustive attempt to provide the lacking item(s) noted below, since, after a decision on the petition for reconsideration, no further reconsideration or review of the matter will be undertaken by the Director.

A grantable petition to make an application special under 37 CFR 1.102(c)(2) and the pilot program as set forth in 74 FR 64666 must be directed to a nonprovisional application filed under 35 USC 111(a) or be a national stage entry under 35 USC 371, exclusive of any reissue applications and be filed prior to the date of the notice, December 8, 2009.

In order to qualify for special status, the following requirements must be met. 1) The application must be classified in one of the eligible US classifications listed in section VI of the notice. 2) The application must have no more than 3 independent claims and no more than 20 total claims. 3) The application must not contain any multiple dependent claims. 4) The application must be directed to a single invention that either: A) materially enhances the quality of the environment or B) that materially contributes to: i) the discovery or development of renewable energy resources, ii) the more efficient utilization and conservation of energy resources, or iii) greenhouse gas emission reduction. If the disclosure is not clear on its face that the claimed invention materially contributes under category (A) or (B), the petition must be accompanied by

a statement by the applicant, assignee, or an attorney/agent registered to practice before the Office explaining how the materiality standard is met. 5) A statement that applicant will agree to make an election without traverse in a telephonic interview if a restriction requirement is made by the examiner. 6) The petition to make special must be filed electronically. 7) The petition must be filed at least one day prior to the date that a first Office Action appears in the Patent Application Information Retrieval (PAIR) system. 8) The petition must be accompanied by a request for early publication in compliance with 37 CFR 1.219 and include the publication fee as set forth in 37 CFR 1.18(d).

The requirement for a fee for consideration of the petition to make special for applications pertaining to Green Technologies has been waived.

The petition lacks item(s) 1 as explained below.

This application has been classified in an area (USPC 585/240) that is not one of the eligible US classifications listed in section VI of the notice. Therefore, this application is not eligible for the Pilot Program. The classification limitations are purposefully made to be narrow for the Pilot Program; however, these may be expanded based upon the success of the Pilot Program. Petitioner may file a preliminary amendment that would cause this application to be classified elsewhere. However, while petitioner may suggest a classification (see, e.g., MPEP 708.02(a)(VII)(C)), the application will be assigned to the most appropriate classification based upon current U.S. classification guidelines. Furthermore, a petition for the Pilot Program should not be filed until and unless all of the requirements set forth in the Notice are met; i.e., a petition should not be filed for an application that is currently classified outside the eligible classifications set forth in the Notice.

Further correspondence with respect to this matter should be addressed as follows:

By Mail: Mail Stop PETITION
Commissioner for Patents
P. O. Box 1450
Alexandria, VA 22313-1450

By hand: U. S. Patent and Trademark Office
Customer Service Window, Mail Stop Petitions
Randolph Building
401 Dulany Street
Alexandria, VA 22314

By FAX: (571) 273-8300

Telephone inquiries concerning this decision should be directed to the undersigned at 571-272-4914.

All other inquiries concerning either the examination or status of the application should be directed to the Technology Center.

The application is being forwarded to the Technology Center Art Unit 1797 for action in its regular turn.

Ramesh Krishnamurthy
Petitions Examiner
Office of Petitions

UNITED STATES PATENT AND TRADEMARK OFFICE

Commissioner for Patents
United States Patent and Trademark Office
P.O. Box 1450
Alexandria, VA 22313-1450
www.uspto.gov

HONEYWELL/UOP
PATENT SERVICES
101 COLUMBIA DRIVE
P O BOX 2245 MAIL STOP AB/2B
MORRISTOWN NJ 07962

MAILED

JAN 14 2010

OFFICE OF PETITIONS

In re Application of	:	
Terry L. MARKER et al	:	
Application No. 12/193,191	:	DECISION ON PETITION
Filed: August 18, 2008	:	TO MAKE SPECIAL UNDER
Attorney Docket No. H0016340-03	:	37 CFR 1.102(c)(2)
	:	

This is a decision on the petition under 37 CFR 1.102(c)(2), filed December 11, 2009, to make the above-identified application special under the pilot program for applications pertaining to Green Technologies as set forth 74 Federal Register Notice 64666 (December 8, 2009).

The petition is **DISMISSED**.

If reconsideration of this decision is desired, a petition for reconsideration must be filed within ONE (1) MONTH OR THIRTY (30) DAYS from the mail date of this decision, whichever is longer. No extension of this time limit can be granted under 37 CFR 1.136(a) or (b). The petition for reconsideration should include an exhaustive attempt to provide the lacking item(s) noted below, since, after a decision on the petition for reconsideration, no further reconsideration or review of the matter will be undertaken by the Director.

A grantable petition to make an application special under 37 CFR 1.102(c)(2) and the pilot program as set forth in 74 FR 64666 must be directed to a nonprovisional application filed under 35 USC 111(a) or be a national stage entry under 35 USC 371, exclusive of any reissue applications and be filed prior to the date of the notice, December 8, 2009.

In order to qualify for special status, the following requirements must be met. 1) The application must be classified in one of the eligible US classifications listed in section VI of the notice. 2) The application must have no more than 3 independent claims and no more than 20 total claims. 3) The application must not contain any multiple dependent claims. 4) The petition must state the basis for seeking special status, i.e., the claimed invention either: A) materially enhances the quality of the environment or B) materially contributes to: i) the discovery or development of renewable energy resources, ii) the more efficient utilization and conservation of energy

resources, or iii) greenhouse gas emission reduction. 5) If the disclosure is not clear on its face that the claimed invention materially contributes under category (A) or (B), the petition must be accompanied by a statement by the applicant, assignee, or an attorney/agent registered to practice before the Office explaining how the materiality standard is met. 6) A statement that applicant will agree to make an election without traverse in a telephonic interview if a restriction requirement is made by the examiner. 7) The petition to make special must be filed electronically. 8) The petition must be filed at least one day prior to the date that a first Office Action appears in the Patent Application Information Retrieval (PAIR) system. 9) The petition must be accompanied by a request for early publication in compliance with 37 CFR 1.219 and include the publication fee as set forth in 37 CFR 1.18(d).

The requirement for a fee for consideration of the petition to make special for applications pertaining to Green Technologies has been waived.

The petition lacks items 1 and 4 as explained below.

In regard to item 1, this application has been classified in an area (USPC 585/240.000) that is not one of the eligible US classifications listed in section VI of the notice. Therefore, this application is not eligible for the Pilot Program. The classification limitations are purposefully made to be narrow for the Pilot Program; however, these may be expanded based upon the success of the Pilot Program. Petitioner may file a preliminary amendment that would cause this application to be classified elsewhere. However, while petitioner may suggest a classification (see, e.g., MPEP 708.02(a)(VII)(C)), the application will be assigned to the most appropriate classification based upon current U.S. classification guidelines. Furthermore, a petition for the Pilot Program should not be filed until and unless all of the requirements set forth in the Notice are met; i.e., a petition should not be filed for an application that is currently classified outside the eligible classifications set forth in the Notice.

In regard to item 4, the instant petition fails to state the basis for the special status (i.e., whether (1) development of renewable energy resources or energy conservation, or (2) greenhouse gas reduction). The petition must be accompanied by a statement by the applicant, assignee, or an attorney/agent registered to practice before the Office explaining how the materiality standard is met. As stated in section III of the Notice, applicant must provide such a statement pertaining to the materiality standard if the application disclosure is not clear on its face as to the materiality of the basis for the special status of the invention. This petition lacks such a statement and it is not agreed that the application on its face meets that materiality standard.

Further correspondence with respect to this matter should be addressed as follows:

By Mail: Mail Stop PETITION
Commissioner for Patents
P. O. Box 1450
Alexandria, VA 22313-1450

By hand: U. S. Patent and Trademark Office
Customer Service Window, Mail Stop Petitions
Randolph Building
401 Dulany Street

Alexandria, VA 22314

By FAX: (571) 273-8300

Telephone inquiries concerning this decision should be directed to Olisa Anwah at 571-272-6051.

All other inquiries concerning either the examination or status of the application should be directed to the Technology Center.

The application is being forwarded to the Technology Center Art Unit 1797 for action in its regular turn.

Ramesh Krishnamurthy

Ramesh Krishnamurthy
Petitions Examiner
Office of Petitions

UNITED STATES PATENT AND TRADEMARK OFFICE

UNITED STATES DEPARTMENT OF COMMERCE
United States Patent and Trademark Office
Address: COMMISSIONER FOR PATENTS
P.O. Box 1450
Alexandria, Virginia 22313-1450
www.uspto.gov

APPLICATION NO.	FILING DATE	FIRST NAMED INVENTOR	ATTORNEY DOCKET NO.	CONFIRMATION NO.
12/193,196	08/18/2008	John P. Brady	H0017132-01	4388

23490 7590 02/03/2010
HONEYWELL/UOP
PATENT SERVICES
101 COLUMBIA DRIVE
P O BOX 2245 MAIL STOP AB/2B
MORRISTOWN, NJ 07962

EXAMINER

ART UNIT	PAPER NUMBER
1797	

NOTIFICATION DATE	DELIVERY MODE
02/03/2010	ELECTRONIC

Please find below and/or attached an Office communication concerning this application or proceeding.

The time period for reply, if any, is set in the attached communication.

Notice of the Office communication was sent electronically on above-indicated "Notification Date" to the following e-mail address(es):

IP.Docketclerk@uop.com
PatentServices-US@Honeywell.com
IP.Docketclerk@Honeywell.com

UNITED STATES PATENT AND TRADEMARK OFFICE

Commissioner for Patents
United States Patent and Trademark Office
P.O. Box 1450
Alexandria, VA 22313-1450
www.uspto.gov

HONEYWELL/UOP
PATENT SERVICES
101 COLUMBIA DRIVE
P O BOX 2245 MAIL STOP AB/2B
MORRISTOWN NJ 07962

FEB 03 2010

In re Application of	:	
Brady et al.	:	DECISION ON PETITION
Application No. 12/193,196	:	TO MAKE SPECIAL UNDER
Filed: 8/18/2008	:	THE GREEN TECHNOLOGY
Attorney Docket No. **H0017132-01**	:	PILOT PROGRAM

This is a decision on the petition under 37 CFR 1.102, filed 12/11/2009, to make the above-identified application special under the pilot program for applications pertaining to Green Technologies as set forth 74 Federal Register Notice 64666 (December 8, 2009).

The petition is **DISMISSED**.

If reconsideration of this decision is desired, a petition for reconsideration must be filed within ONE (1) MONTH OR THIRTY (30) DAYS from the mail date of this decision, whichever is longer. No extension of this time limit can be granted under 37 CFR 1.136(a) or (b). The petition for reconsideration should include an exhaustive attempt to provide the lacking item(s) noted below, since, after a decision on the petition for reconsideration, no further reconsideration or review of the matter will be undertaken by the Director.

A grantable petition to make an application special under 37 CFR 1.102 and the pilot program as set forth in 74 FR 64666 must be directed to a nonprovisional application filed under 35 USC 111(a) or be a national stage entry under 35 USC 371, exclusive of any reissue applications and be filed prior to the date of the notice, December 8, 2009.

In order to qualify for special status, the following requirements must be met. 1) The application must be classified in one of the eligible US classifications listed in section VI of the notice. 2) The application must have no more than 3 independent claims and no more than 20 total claims. 3) The application must not contain any multiple dependent claims. 4) The petition must state the basis for seeking special status, i.e., the claimed invention either: A) materially enhances the quality of the environment or B) materially contributes to: i) the discovery or development of renewable energy resources, ii) the more efficient utilization and conservation of energy resources, or iii) greenhouse gas emission reduction. 5) If the disclosure is not clear on its face

that the claimed invention materially contributes under category (A) or (B), the petition must be accompanied by a statement by the applicant, assignee, or an attorney/agent registered to practice before the Office explaining how the materiality standard is met. 6) A statement that applicant will agree to make an election without traverse in a telephonic interview if a restriction requirement is made by the examiner. 7) The petition to make special must be filed electronically. 8) The petition must be filed at least one day prior to the date that a first Office Action appears in the Patent Application Information Retrieval (PAIR) system. 9) The petition must be accompanied by a request for early publication in compliance with 37 CFR 1.219 and include the publication fee as set forth in 37 CFR 1.18(d).

The requirement for a fee for consideration of the petition to make special for applications pertaining to Green Technologies has been waived.

The petition lacks item(s) 1.

In regard to item 1, petitioner should note that this application has been classified in an area (USPC 44/308.000) that is not one of the eligible US classifications listed in section VI of the notice. Therefore, this application is not eligible for the Pilot Program. The classification limitations are purposefully made to be narrow for the Pilot Program; however, these may be expanded based upon the success of the Pilot Program. Petitioner may file a preliminary amendment that would cause this application to be classified elsewhere. However, while petitioner may suggest a classification (see, e.g., MPEP 708.02(a)(VII)(C)), the application will be assigned to the most appropriate classification based upon current U.S. classification guidelines. Furthermore, a petition for the Pilot Program should not be filed until and unless all of the requirements set forth in the Notice are met; i.e., a petition should not be filed for an application that is currently classified outside the eligible classifications set forth in the Notice.

Any reconsideration of this decision should be submitted through the USPTO electronic filing system, EFS-Web, and selecting the document description of "Petition for Green Tech Pilot" on the EFS-Web screen.

Telephone inquiries concerning this decision should be directed to Tom Dunn at 571-272-1171.

The application is being forwarded to the Technology Center Art Unit 1797 for action in its regular turn.

/Tom Dunn/

Tom Dunn
Quality Assurance Specialist
Technology Center 1700

UNITED STATES PATENT AND TRADEMARK OFFICE

UNITED STATES DEPARTMENT OF COMMERCE
United States Patent and Trademark Office
Address: COMMISSIONER FOR PATENTS
P.O. Box 1450
Alexandria, Virginia 22313-1450
www.uspto.gov

APPLICATION NO.	FILING DATE	FIRST NAMED INVENTOR	ATTORNEY DOCKET NO.	CONFIRMATION NO.
12/193,196	08/18/2008	John P. Brady	H0017132-01	4388

23490 7590 03/17/2010
HONEYWELL/UOP
PATENT SERVICES
101 COLUMBIA DRIVE
P O BOX 2245 MAIL STOP AB/2B
MORRISTOWN, NJ 07962

EXAMINER

ART UNIT	PAPER NUMBER
1797	

NOTIFICATION DATE	DELIVERY MODE
03/17/2010	ELECTRONIC

Please find below and/or attached an Office communication concerning this application or proceeding.

The time period for reply, if any, is set in the attached communication.

Notice of the Office communication was sent electronically on above-indicated "Notification Date" to the following e-mail address(es):

IP.Docketclerk@uop.com
PatentServices-US@Honeywell.com
IP.Docketclerk@Honeywell.com

UNITED STATES PATENT AND TRADEMARK OFFICE

Commissioner for Patents
United States Patent and Trademark Office
P.O. Box 1450
Alexandria, VA 22313-1450
www.uspto.gov

HONEYWELL/UOP
PATENT SERVICES
101 COLUMBIA DRIVE
P O BOX 2245 MAIL STOP AB/2B
MORRISTOWN NJ 07962

MAR 17 2010

In re Application of	:	
Brady et al.	:	DECISION ON PETITION
Application No. 12/193,196	:	TO MAKE SPECIAL UNDER
Filed: 8/18/2008	:	THE GREEN TECHNOLOGY
Attorney Docket No. **H0017132-01**	:	PILOT PROGRAM

This is a decision on the request for reconsideration, filed 3/4/2010, to make the above-identified application special under the pilot program for applications pertaining to Green Technologies as set forth 74 Federal Register Notice 64666 (December 8, 2009).

The petition is **DENIED**.

A grantable petition to make an application special under 37 CFR 1.102 and the pilot program as set forth in 74 FR 64666 must be directed to a nonprovisional application filed under 35 USC 111(a) or be a national stage entry under 35 USC 371, exclusive of any reissue applications and be filed prior to the date of the notice, December 8, 2009.

In order to qualify for special status, the following requirements must be met. 1) The application must be classified in one of the eligible US classifications listed in section VI of the notice. 2) The application must have no more than 3 independent claims and no more than 20 total claims. 3) The application must not contain any multiple dependent claims. 4) The petition must state the basis for seeking special status, i.e., the claimed invention either: A) materially enhances the quality of the environment or B) materially contributes to: i) the discovery or development of renewable energy resources, ii) the more efficient utilization and conservation of energy resources, or iii) greenhouse gas emission reduction. 5) If the disclosure is not clear on its face that the claimed invention materially contributes under category (A) or (B), the petition must be accompanied by a statement by the applicant, assignee, or an attorney/agent registered to practice before the Office explaining how the materiality standard is met. 6) A statement that applicant will agree to make an election without traverse in a telephonic interview if a restriction requirement is made by the examiner. 7) The petition to make special must be filed electronically. 8) The petition must be filed at least one day prior to the date that a first Office Action appears in the Patent Application Information Retrieval (PAIR) system. 9) The petition

must be accompanied by a request for early publication in compliance with 37 CFR 1.219 and include the publication fee as set forth in 37 CFR 1.18(d).

The requirement for a fee for consideration of the petition to make special for applications pertaining to Green Technologies has been waived.

The petition lacks item(s) 1.

Applicants arguments regarding the suggested classification have been considered but are not deemed to be persuasive. While applications are routinely cross referenced in multiple related classes/subclasses, the Original classification is determined by the following factors:

1) Hierarchy of categories of subject matter (e.g. method of using claims determine classification over article claims).

2) Superiority of types of subject matter (e.g. chemical subject matter controls over electrical subject matter).

3) Class superiority. All classes in the US Classification system are assigned a relative superiority. This listing of all classes arranged by their relative superiority can be found on the USPTO website on the Classification Home Page under the link entitled "Classes Within the US Classification System Arranged by Related Subjects." Within each class, the highest appropriate subclass will also be used to determine original classification.

Based on the criteria above, the current Original classification is deemed to be appropriate.

Telephone inquiries concerning this decision should be directed to Tom Dunn at 571-272-1171.

The application is being forwarded to the Technology Center Art Unit 1797 for action in its regular turn.

/Tom Dunn/

Tom Dunn
Quality Assurance Specialist
Technology Center 1700

UNITED STATES PATENT AND TRADEMARK OFFICE

UNITED STATES DEPARTMENT OF COMMERCE
United States Patent and Trademark Office
Address: COMMISSIONER FOR PATENTS
P.O. Box 1450
Alexandria, Virginia 22313-1450
www.uspto.gov

APPLICATION NO.	FILING DATE	FIRST NAMED INVENTOR	ATTORNEY DOCKET NO.	CONFIRMATION NO.
12/193,202	08/18/2008	Yiyu Chen	YOR920070320US2	4395

48915 7590 02/09/2009
CANTOR COLBURN LLP-IBM YORKTOWN
20 Church Street
22nd Floor
Hartford, CT 06103

EXAMINER
CALDWELL, ANDREW T

ART UNIT	PAPER NUMBER
2442	

NOTIFICATION DATE	DELIVERY MODE
02/09/2009	ELECTRONIC

Please find below and/or attached an Office communication concerning this application or proceeding.

The time period for reply, if any, is set in the attached communication.

Notice of the Office communication was sent electronically on above-indicated "Notification Date" to the following e-mail address(es):

usptopatentmail@cantorcolburn.com

UNITED STATES PATENT AND TRADEMARK OFFICE

Commissioner for Patents
United States Patent and Trademark Office
P.O. Box 1450
Alexandria, VA 22313-1450
www.uspto.gov

MAILED

FEB 06 2009

TECHNOLOGY CENTER 2100

CANTOR COLBURN LLP-IBM YORKTOWN
20 Church Street
22nd Floor
Hartford CT 06103

In re Application of: CHEN, Yiyu et. al. Serial No.: 12/193,202 Filed: August 18, 2008 Docket: YOR920070320US2 Title: METHOD AND APPARATUS FOR MODEL-BASED PAGEVIEW LATENCY MANAGEMENT	DECISION ON PETITION TO MAKE SPECIAL FOR NEW APPLICATION UNDER 37 C.F.R. § 1.102 & M.P.E.P. § 708.02

This is a decision on the petition filed on August 18, 2008 to make the above-identified application special for accelerated examination procedure under 37 C.F.R. § 1.102(d).

The petition to make the application special is **DISMISSED**.

REGULATION AND PRACTICE

A grantable petition to make special under 37 C.F.R. § 1.102(d) and pursuant to the "Change to Practice for Petitions in Patent Applications to Make Special and for Accelerated Examination" published in the Federal Register on June 26, 2006 (71 Fed. Reg. 36323), must satisfy the following conditions:

I. Conditions Regarding the Application:

1. the application must be a non-reissue utility or design application filed under 37 CFR 1.111(a);
2. the application, the petition and the required fees must be filed electronically using the USPTO's electronic filing system (EFS), or EFS-web; if not filed electronically, a statement asserting that EFS and EFS-web were not available during the normal business hours.
3. at the time of filing, the application must be complete under 37 CFR 1.51 and in condition for examination;
4. the application must contain three or fewer independent claims and twenty or fewer total claims and the claims must be directed to a single invention.

II. Conditions Regarding the Petition:

The petition must:

1. be filed with the application;
2. include a statement that applicant agrees not to separately argue the patentability of any dependent claim during any appeal in the application;
3. include a statement that applicant agrees to make an election without traverse in a telephone interview.
4. include a statement that applicant agrees to conduct such an interview when requested by the examiner.
5. include a statement, made based on a good faith belief, that a preexamination search in compliance with the following requirements, was conducted, including an identification of the filed of search by United States class and subclass, where applicable, and for database searches, the search logic or chemical structure or sequence used as a query, the name of the file(s) searched and the database service, and the date of the search.

The pre-examination search must:

5.1 involve U.S. patents and patent application publications, foreign patent documents, and non-patent literature, unless the applicant can justify with reasonable certainty that no references more pertinent than those already identified are likely to be found in the eliminated sources and includes such a justification with this statement;

5.2. be directed to the claimed invention and encompass all of the features of the claims, giving the claims the broadest reasonable interpretation;

5.3. encompass the disclosed features that may be claimed.

6. The pre-examination search must provide in support of the petition an accelerated examination support document. An accelerated examination support document must include:

6.1. an information disclosure statement (IDS) in compliance with 37 CFR 1.98 citing each reference deemed most closely related to the subject matter of each of the claims;

6.2. an identification of all the limitations in the claims that are disclosed by the reference specifying where the limitation is disclosed in the cited reference;

6.3. a detailed explanation of how each of the claims is patentable over the references cited with particularity required by 37 CFR 1.111 (b) and (c);

6.4. a concise statement of the utility of the invention as defined in each of the independent claims (unless the application is a design application);

6.5. a showing of where each limitation of the claims finds support under 35 USC 112, first paragraph, in the written description of the specification. If applicable, the showing must also identify:

(1) each means-(or step) plus-function claim element that invokes consideration under 35 USC 112, sixth paragraph; and

(2) the structure, material, or acts in the specification that corresponds to each means- (or step) plus-function claim element that invokes consideration under 35 USC 112, sixth paragraph; if the application claims the benefit of one or more applications under title 35, United States Code, the showing must

also include where each limitation of the claims finds support under 35 USC 112, first paragraph, in each such application in which such supports exists;

6.6. an identification of any cited references that may be disqualified under 35 U.S.C. §103(c).

REVIEW OF FACTS

The conditions [I. 1-4, II. 1-5, II. 5.2 - 5.3, II. 6.2-6.4 and II 6.6] above are considered to have been met. However, the petition fails to comply with the conditions [II. 5.1, and II. 6.5]. Therefore, the petition fails to meet the required conditions to be accorded special status under the accelerated examination procedure.

Regarding the requirement of MPEP 708.02(a) VIII (C) or I (H), and item II. 5.1 above, the Pre-examination Search Document (PESD) must include: an identification of the field of search by United States class and subclass and the date of the search, where applicable, and for database searches, the search logic or chemical structure or sequence used as a query, the name of the file or files searched and the database service, and the date of the search.

For classification searches, MPEP §719.05 states that a classification search is defined as a complete search of ***all*** the documents in a particular subclass, and it is not limited by any text query or other means. It is unclear whether Petitioner on October 9, 2007, January 18, 2008 and August 5, 2008 searched all the provided classes and subclasses with the requisite particularity to uncover relevant prior art.

Petitioner is further required to identify which of whether U.S. patents and patent application publications, foreign patent documents, and non-patent literature where involved in the "class alone" search mentioned above, unless the applicant can justify with reasonable certainty that no references more pertinent than those already identified are likely to be found in the eliminated sources and includes such a justification with this statement.

The Petitioner is required to clarify whether the identified field of search (all subclasses of classes mentioned above comprising approximately **698,466** documents when search using USPTO as database search service using all files, i.e. USPAT, US-PGPUB, USOCR, FPRS, EPO, JPO, DERWENT and IBM_TDB) were performed as required by the above-mention MPEP section (the identified classes and subclasses were searched in their entirety and not limited by any text query or other means); or if they were combined (i.e. the text search logic used was utilized in combination with the class/subclass), identify the logic and the combination of searches. Clarification is required.

It is noted that Petitioner provided classes/subclasses 715/501.1, 513, 515, 516 and 517 currently represent subclasses that have been **reclassified**. These subclasses have been transferred directly to a FOR Collection which contain ONLY Foreign patents or Non-patent Literature. Thus, subclasses **501.1, 513, 515, 516 and 517** refer to the **abolished subclass** from the collection FOR211, FOR223, FOR225, FOR226 and FOR227, respectively.

The Petitioner is required to clarify whether the identified field of search included ONLY Foreign patents or Non-patent Literature and specifically which foreign patent or

non-patent literature was used to perform this search. Petitioner is required to identify whether the identified subclasses (i.e. FOR211, FOR223, FOR225, FOR226 and FOR227) were searched in their entirety and not limited by any text query or other means); or if they were combined (i.e. the text search logic used was utilized in combination with the identified subclasses), identify the logic and the combination of searches. Clarification is required.

Regarding the requirement of MPEP § 708.02(a)(I)(I)(5) and items 6.5 above, the Accelerated Examination Support Document is required to provide a showing of where each limitation of each claim finds support under 35 USC 112, first paragraph, in the written description of the specification. More particularly, if the application claims the benefit of one or more applications under title 35, United States Code, ***the showing must also include*** *where each limitation of the claims finds support under the first paragraph of 35 U.S.C. 112 in each such application in which such support exists.*

According to specification (page 1) and section "9(E) Showing of Support under 35 USC 112, First Paragraph" last sentence (page 6), respectively; "[t]his application is a continuation of U.S. patent application Serial No. 11/876,061 filed October 22, 2007, this disclosure of which is incorporated by reference herein in its entirety." and "[t]he application is a continuation of and claims the benefit of U.S. Patent Application 11/876,061."

Thus, section (II) 6.5 above requires that petitioner **must** include a showing where each limitation of the claims find support in ***each such application in which such supports exist***; thus the petition's showing fails to meet requirement of MPEP § 708.02(a)(I)(I)(5) and items 6.5 above.

The Petitioner should review the applications based on which priority is claimed, point out any differences and show the exact locations within the specification of each such document providing support under 35 USC, first paragraph for each limitation of the instant claims

Additionally, it is noted that on pages 3 and 5 of Petitioner's AESD, there is reference to "*independent claims 1 and 3*", however, the AESD properly identifies (page 1) that "[t]here is **one claim** currently pending in the application". Correction is required.

DECISION

For the above-stated reasons, the petition is **DISMISSED**. The application will therefore be taken up by the examiner for action in its regular turn.

Petitioner is given a single opportunity to perfect the petition. Any request for reconsideration of this decision must be submitted within 1 (one) month or 30 (thirty) days, whichever is longer, (no extension of time under 37 CFR 1.136(a)) from the date of this decision in order to be considered timely. Any request for reconsideration must address the deficiencies indicated above.

Petitioner is reminded that, upon granting of the special status of the application on request for reconsideration, the application will be processed expeditiously. However, due to the dismissal of the instant petition, examination may not be completed within twelve months of the filing date of the application.

Any inquiry regarding this decision should be directed the undersigned whose telephone number is (571) 272-4147.

If attempts to reach the undersigned by telephone are unsuccessful, Tod Swann, Quality Assurance Specialist, can be reached at (571) 272-3612.

/bp/

Kim Huynh,
Quality Assurance Specialist
Technology Center 2400
Network, Multiplexing, Cable and Security

UNITED STATES PATENT AND TRADEMARK OFFICE

COMMISSIONER FOR PATENTS
UNITED STATES PATENT AND TRADEMARK OFFICE
WASHINGTON, DC 20231
www.uspto.gov

MAILED

MAR 16 2009

TECHNOLOGY CENTER 2100

CANTOR COLBURN LLP-IBM YORKTOWN
20 CHURCH STREET
22nd FLOOR
HARTFORD CT 06103

In re Application of: CHEN, Yiyu et al.
Serial No.: **12/193,202**
Filed: August 18, 2008
Docket: YOR920070320US2
For: METHOD AND APPARATUS FOR MODEL-BASED PAGEVIEW LATENCY MANAGEMENT

DECISION ON PETITION TO MAKE SPECIAL FOR NEW APPLICATION UNDER 37 C.F.R. § 1.102 & M.P.E.P. § 708.02

This is a decision on the renewed petition filed on March 04, 2009 to make the above-identified application special for accelerated examination procedure under 37 C.F.R. § 1.102(d). The original petition, submitted on August 18, 2008 was dismissed in the decision mailed on February 06, 2009.

The renewed petition to make the application special is **GRANTED** as the new Examination Support Document meets the requirements of conditions II.6.5 on the discussion of the claim limitations that find support under 35 USC 112, first paragraph and the new pre-examination search document meets the requirement of MPEP 708.02 (condition II 5.1) with respect to a complete search that were deficient in the original petition.

The application is eligible for accelerated examination and the petition complies with the conditions for granting the application special status pursuant to the "Change to Practice for Petitions in Patent Applications to Make Special and for Accelerated Examination" issued June 26, 2006, in the Federal Register. (71 Fed. Reg. 36323).

The prosecution of the instant application will be conducted expeditiously according to the following guidelines.

1. The application will be docketed to an examiner and taken up for action within two weeks of the date of this decision.

2. Restriction Practice:
   If the examiner determines that the claims are not directed to a single invention, a telephone request to elect one single invention will be made pursuant to MPEP 812.01. As a prerequisite to the grant of this petition, the applicant has agreed to make an oral election, by telephone, without traverse. If the applicant refuses to make an election without traverse, or the examiner cannot reach the applicant after a reasonable effort, the examiner will treat the first claimed invention (invention defined by claim 1) as having being constructively elected without traverse for examination.

3. Office action:
   If it is determined that, after appropriate consultation, there is a potential rejection or any other issue to be addressed, the examiner will telephone the applicant and arrange an interview to discuss and resolve the

issue. An Office action, other than a Notice of Allowance and Fee(s) Due (Notice of Allowance), will not be issued unless either: 1) an interview was conducted but did not result in agreed to action that places the application in condition for allowance, or, 2) a determination is made that an interview would be unlikely to result in the application being placed in condition for allowance, and 3) an internal conference has been held to review any rejection of any claim.

4. Time for Reply:
An Office action other than a Notice of Allowance or a final Office action will set a shortened statutory period of one month or thirty days, whichever is longer, for reply with no extension of time available under 37 CFR 1.136(a). Failure to timely file a reply within this non-extendible period for reply will result in the abandonment of the application.

5. Reply by Applicant:
A timely reply to an Office action other than the Notice of Allowance must be submitted electronically via EFS or EFS-web and limited to addressing the rejections, objections and requirement made. Any amendment that attempts to: 1) add claims which would result in more than three pending independent claims or more than twenty pending total claims; 2) present claims not encompassed by the pre-examination search or an updated accelerated examination support document; or 3) present claims that are directed a non-elected invention or an invention other than that previously claimed and examined in the application, will be treated as not fully responsive and will not be entered.

   For any amendment to the claims (including any new claim) that is not encompassed by the accelerated examination support document, applicant must provide an updated accelerated examination support document that encompasses the amended or new claims at the time of filing of the amendment.

   To proceed expeditiously with the examination, it is recommended that a reply with amendments made to any claim or with any new claim being added be accompanied by an updated accelerated examination support document or a statement explaining how the amended or new claim is supported by the original accelerated examination support document.

6. Information Disclosure Statement (IDS):
Any IDS filed during prosecution must be submitted electronically via EFS or EFS-web, accompanied by an updated accelerated examination support document, and be in compliance with 37 CFR 1.97 and 1.98.

7. Post-Allowance Processing:
To expedite processing of the allowed application into a patent, the applicant must: 1) pay the required fees within one month of the date of the Notice of Allowance, and 2) not file any post allowance papers not required by the Office. In no event may the issue fee be paid and accepted later than three months from the date of the Notice of Allowance.

8. After-Final and Appeal Procedures:
To expedite prosecution, after receiving the final Office action, applicant must: 1) promptly file a notice of appeal, an appeal brief and appeal fees; and 2) not request a pre-appeal brief conference.

   Any amendment, affidavit or other evidence filed after final Office action must comply with applicable rules and the requirements outlined in numbered paragraphs 5 and 6 above.

On appeal, the application will proceed according to normal appeal procedures. After appeal, the application will again be treated special.

9. Proceedings Outside the Normal Examination Process:
If the application becomes involved in a proceeding that is outside the normal examination process (e.g., a secrecy order, national security review, interference proceeding, petitions under 37 CFR 1.181, 182 or 183), the application will be treated special before and after such proceeding.

10. Final Disposition:
The twelve month goal of this accelerated examination procedure ends with a final disposition. The mailing of a final Office action, a Notice of Allowance, the filing of a Notice of Appeal, or the filing of a Request for Continued Examination (RCE) is the final disposition.

If, during prosecution, a paper is not filed electronically using EFS-web, a reply is filed but is not fully responsive, the application is involved in an appeal, or a proceeding outside normal examination process, the application will still be examined expeditiously, however, the final disposition may occur more than twelve months from the filing of the application.

Any inquiry regarding this decision should be directed the undersigned whose telephone number is (571) 272-3902. If attempts to reach the undersigned by telephone are unsuccessful, Kim Huynh, Quality Assurance Specialist, can be reached at (571) 272-4147.

/thn/

Beatriz Prieto

Beatriz Prieto, WQAS
Technology Center 2400
Network, Multiplexing, Cable and Security

UNITED STATES PATENT AND TRADEMARK OFFICE

UNITED STATES DEPARTMENT OF COMMERCE
United States Patent and Trademark Office
Address: COMMISSIONER FOR PATENTS
P.O. Box 1450
Alexandria, Virginia 22313-1450
www.uspto.gov

APPLICATION NO.	FILING DATE	FIRST NAMED INVENTOR	ATTORNEY DOCKET NO.	CONFIRMATION NO.
12/193,202	08/18/2008	Yiyu Chen	YOR920070320US2	4395

48915 7590 03/17/2009
CANTOR COLBURN LLP-IBM YORKTOWN
20 Church Street
22nd Floor
Hartford, CT 06103

EXAMINER
CALDWELL, ANDREW T

ART UNIT	PAPER NUMBER
2442	

NOTIFICATION DATE	DELIVERY MODE
03/17/2009	ELECTRONIC

Please find below and/or attached an Office communication concerning this application or proceeding.

The time period for reply, if any, is set in the attached communication.

Notice of the Office communication was sent electronically on above-indicated "Notification Date" to the following e-mail address(es):

usptopatentmail@cantorcolburn.com

UNITED STATES PATENT AND TRADEMARK OFFICE

UNITED STATES DEPARTMENT OF COMMERCE
United States Patent and Trademark Office
Address: COMMISSIONER FOR PATENTS
P.O. Box 1450
Alexandria, Virginia 22313-1450
www.uspto.gov

APPLICATION NO.	FILING DATE	FIRST NAMED INVENTOR	ATTORNEY DOCKET NO.	CONFIRMATION NO.
12/193,293	08/18/2008	Hiroo Tsujimoto	MNL-2018-2086	4539

7590 07/23/2009
NIXON & VANDERHYE, PC
901 NORTH GLEBE ROAD, 11TH FLOOR
ARLINGTON, VA 22203

EXAMINER
KOONTZ, TAMMY J

ART UNIT	PAPER NUMBER
3974	

MAIL DATE	DELIVERY MODE
07/23/2009	PAPER

DECISION GRANTING PETITION UNDER 37 CFR 1.138(d)

The declaration of express abandonment is recognized

This is in response to the petition under 37 CFR 1.138(d), requesting for a refund of any previously paid search fee and excess claims fee in the above-identified application.

The petition is granted.

The express abandonment is recognized. Any previously paid search fee and excess claims fee are hereby refunded.

Telephone inquiries should be directed to the Office of Data Management at (571) 272-4200.

Betty Powell

Patent Publication Branch
Office of Data Management

Adjustment date: 07/23/2009 BPOWELL
08/19/2008 INTEFSW 00000566 12193293
02 FC:1111 -510.00 OP

Adjustment date: 07/23/2009 BPOWELL
08/19/2008 INTEFSW 00000566 12193293
02 FC:1111 -510.00 OP

FORM PET651G (Rev. 08/07)

Refund Ref:
07/23/2009 0030072556

Credit Card Refund Total: $510.00

Ac Exp..: XXXXXXXXXXX2021

UNITED STATES PATENT AND TRADEMARK OFFICE

Commissioner for Patents
United States Patent and Trademark Office
P.O. Box 1450
Alexandria, VA 22313-1450
www.uspto.gov

MAILED

OCT 08 2008

TECHNOLOGY CENTER 2100

SHIMOKAJI & ASSOCIATES, P.C.
8911 RESEARCH DRIVE
IRVINE CA 92618

In re Application of: HAMA et al.
Application No. 12/193,308
Filed: August 18, 2008
For: SYSTEM FOR DETERMINING ARRAY SEQUENCE OF A PLURALITY OF PROCESSING OPERATIONS

DECISION ON REQUEST TO PARTICIPATE IN PATENT PROSECUTION HIGHWAY PILOT PROGRAM AND PETITION TO MAKE SPECIAL UNDER 37 CFR 1.102(d)

This is a decision on the request to participate in the Patent Prosecution Highway (PPH) program and the petition under 37 CFR 1.102(d), filed August 18, 2008, to make the above-identified application special.

The request and petition are **GRANTED**.

A grantable request to participate in the PPH pilot program and petition to make special require:

(1) The U.S. application must validly claim priority under 35 U.S.C. 119(a) to one or more applications filed in the JPO;

(2) Applicant must submit a copy of the allowable/patentable claim(s) from the JPO application(s) along with an English translation thereof and a statement that the English translation is accurate;

(3) All the claims in the U.S. application must sufficiently correspond or be amended to sufficiently correspond to the allowable/patentable claim(s) in the JPO application(s);

(4) Examination of the U.S. application has not begun;

(5) Applicant must submit a copy of all the office actions from each of the JPO application(s) containing the allowable/patentable claim(s) along with an English translation thereof and a statement that the English translation is accurate;

(6) Applicant must submit an IDS listing the documents cited by the JPO examiner in the JPO office action along with copies of documents except U.S. patents or U.S. patent application publications; and

(7) The required petition fee under 37 CFR 1.17(h).

The request to participate in the PPH pilot program and petition are found to comply with the above requirements. Accordingly, the above-identified application has been accorded "special" status.

Telephone inquiries concerning this decision should be directed to Mano Padmanabhan at 571-272-4210.

All other inquiries concerning the examination or status of the application is accessible in the PAIR system at http://www.uspto.gov/ebc/index.html.

The application is being forwarded to the examiner for action on the merits commensurate with this decision.

/Mano Padmanabhan/

Mano Padmanabhan
Quality Assurance Specialist, Technology Center 2100, Workgroup 2180
571-272-4210

UNITED STATES PATENT AND TRADEMARK OFFICE

Commissioner for Patents
United States Patent and Trademark Office
P.O. Box 1450
Alexandria, VA 22313-1450
www.uspto.gov

TERADYNE, INC.
C/O FOLEY & LARDNER, LLP
111 HUNTINGTON AVENUE
26TH FLOOR
BOSTON, MA 02199-7610

MAILED

JUN 09 2010

OFFICE OF PETITIONS

In re Application of	:	
Srinivasan et al.	:	DECISION ON PETITION
Application No. 12/193,321	:	TO WITHDRAW
Filed: August 18, 2008	:	FROM RECORD
Attorney Docket No. T0529.70083US00	:	

This is a decision on the Request to Withdraw as attorney or agent of record under 37 C.F.R. § 1.36(b) filed April 23, 2010, which is being treated as a request to withdraw from employment in a proceeding before the Office under 37 C.F.R. § 10.40.

The request is **DISMISSED**.

A review of the file record indicates that Foley & Lardner, LLP does not have power of attorney in this patent application. Accordingly, the request to withdraw under 37 C.F.R. § 1.36(b) is not applicable.

The request to change the correspondence address of record is not accepted in view of Foley & Lardner, LLP not having power of attorney. See MPEP §§ 601.03 and 405.

All future communications from the Office will continue to be directed to the below-listed address until otherwise notified by applicant.

Telephone inquires concerning this decision should be directed to the undersigned at 571-272-7751.

Joan Olszewski
Petitions Examiner
Office of Petitions

cc: TERADYNE, INC.
c/o WOLF, GREENFIELD & SACKS, P.C.
600 ATLANTIC AVENUE
BOSTON MA 02210-2206

UNITED STATES PATENT AND TRADEMARK OFFICE

Commissioner for Patents
United States Patent and Trademark Office
P.O. Box 1450
Alexandria, VA 22313-1450
www.uspto.gov

COPY MAILED

FEB 13 2009

OFFICE OF PETITIONS

PILLSBURY WINTHROP SHAW PITTMAN, LLP
P.O. BOX 10500
MCLEAN VA 22102

In re Application of :
Lewis, Vincent, Mulberry. McMullan, Lunt, and Barker :
Application No.: 12/193,363 : DECISION ACCORDING
Filed: August 18, 2008 : RULE 47(a) STATUS
Attorney Docket No: 092005-0373208 :
For: SYSTEM AND METHOD FOR STORAGE MANAGEMENT

This is in response to the petition under 37 CFR 1.47(a), filed January 28, 2009(certificate of mailing November 28, 2006.)

The petition is **GRANTED**.

The above-identified application and papers have been reviewed and found in compliance with 37 CFR 1.47(a). This application is hereby accorded Rule 1.47(a) status.

The above-cited application was filed on August 18, 2008, and was not accompanied by a proper declaration. A Notice to File Missing Parts of Nonprovisional Application was mailed on August 28, 2008, requiring a properly executed declaration and surcharge. The notice allowed an extendable period for reply of two months from its mailing date. On January 28, 2009, the instant petition was filed with a request for an extension of time within the third month.

Petitioner has shown that inventors Lewis and McMullan have constructively refused to join the filing of the above-identified application after having been presented with the application papers. The above-identified application and papers have been reviewed and found in compliance with 37 CFR 1.47(a). This application is hereby accorded Rule 1.47(a) status.

As provided in Rule 1.47(c), this Office will forward notice of this application's filing to the non-signing inventor at the addresses given in the petition. Notice of the filing of this application will also be published in the Official Gazette.

This application will be forwarded to the Office of Patent Application Processing for further processing.

Telephone inquiries concerning this decision should be directed to the undersigned at (571) 272-3222.

Kenya A. McLaughlin
Petitions Attorney
Office of Petitions

UNITED STATES PATENT AND TRADEMARK OFFICE

Commissioner for Patents
United States Patent and Trademark Office
P.O. Box 1450
Alexandria, VA 22313-1450
www.uspto.gov

CANTOR COLBURN LLP - IBM LOTUS
20 Church Street
22nd Floor
Hartford CT 06103

MAILED

JAN 14 2009

TECHNOLOGY CENTER 2100

In re Application of: RAMIREZ, Jessica W., et. al.
Serial No.: **12/193,374**
Filed: August 18, 2008
Docket: CAM920070195US2
Title: METHOD OF BALANCING COMMUNICATION LOAD IN A SYSTEM BASED ON DETERMINATION OF USER-USER AFFINITY LEVELS

DECISION ON PETITION TO MAKE SPECIAL FOR NEW APPLICATION UNDER 37 C.F.R. § 1.102 & M.P.E.P. § 708.02

This is a decision on the petition filed on August 18, 2008 to make the above-identified application special for accelerated examination procedure under 37 C.F.R. § 1.102(d).

Clarification provided by Petitioner (LEVY, Howard Reg. No. 55,378) was provided on January 05, 2009 regarding the following minor informalities.

(i) Petitioner confirms that section "9(C) Detailed Explanation of Patentability" (page 6) of AESD inadvertently stating that "[t]he cited references jointly and separately each fail to disclose several of the features of claims **1-3** of the claimed invention", should be **one (1)** claim, as correctly stated on page 1 of the same document.

(ii) Petitioner confirms that section "9(E) Showing of Support under 35 USC 112, first paragraph" (last paragraph on page 11) of the AESD, inadvertently stating that "[t]he application does **not** claim benefit of any application", should state that the application does claim the benefit of one application, since this section has properly shown/mapped where each limitation of the claims finds support under 35 USC 112, first paragraph, in the written description of the specification of the parent application US Appl 12/014,162.

(iii) Petitioner does acknowledged with respect to the Pre-examination Search Document (PESD) that identified field of search by United States classes and subclass 345/743 and 370/675 are **not current US subclasses** but **old** classes/subclasses which in conjunction with the other indicated classes/subclasses were *searched in its entirety and not in combination with text search logic.* Petitioner will be mindful of this when updating his/her search.

(iv) Petitioner clarifies that classes/subclasses **709/100, 104, and 105** currently represent subclasses that have been **reclassified**. These subclasses have been transferred directly to a FOR Collection which contain ONLY Foreign patents or Non-patent Literature. Thus, inadvertently listed 709 subclasses **100, 104, and 105** should refer to Foreign collection, namely, FOR100, FOR104, and FOR105, respectively.

The Petitioner has clarify that the database service and filed searched for the FOR collection (FOR100, FOR104, and FOR105) are the same listed foreign patent or non-patent literature *files* used to perform the text search logic (on pages 2-4 of PESD) performed on August 14, 2008 using the MicroPatent database service.

The petition to make the application special is **GRANTED**.

The application is eligible for accelerated examination and the petition complies with the conditions for granting the application special status pursuant to the "Change to Practice for Petitions in Patent Applications to Make Special and for Accelerated Examination" published June 26, 2006, in the Federal Register. (71 Fed. Reg. 36323).

The prosecution of the instant application will be conducted expeditiously according to the following guidelines.

1. The application will be docketed to an examiner and taken up for action within two weeks of the date of this decision.

2. Restriction Practice:
   If the examiner determines that the claims are not directed to a single invention, a telephone request to elect one single invention will be made pursuant to MPEP 812.01. As a prerequisite to the grant of this petition, the applicant has agreed to make an oral election, by telephone, without traverse. If the applicant refuses to make an election without traverse, or the examiner cannot reach the applicant after a reasonable effort, the examiner will treat the first claimed invention (invention defined by claim 1) as having being constructively elected without traverse for examination.

3. Office action:
   If it is determined that, after appropriate consultation, there is a potential rejection or any other issue to be addressed, the examiner will telephone the applicant and arrange an interview to discuss and resolve the issue. An Office action, other than a Notice of Allowance and Fee(s) Due (Notice of Allowance), will not be issued unless either: 1) an interview was conducted but did not result in agreed to action that places the application in condition for allowance, or, 2) a determination is made that an interview would be unlikely to result in the application being placed in condition for allowance, and 3) an internal conference has been held to review any rejection of any claim.

4. Time for Reply:
   An Office action other than a Notice of Allowance or a final Office action will set a shortened statutory period of one month or thirty days, whichever is longer, for reply with no extension of time available under 37 CFR 1.136(a). Failure to

timely file a reply within this non-extendible period for reply will result in the abandonment of the application.

5. Reply by Applicant:
A timely reply to an Office action other than the Notice of Allowance must be submitted electronically via EFS or EFS-web and limited to addressing the rejections, objections and requirement made. Any amendment that attempts to: 1) add claims which would result in more than three pending independent claims or more than twenty pending total claims; 2) present claims not encompassed by the pre-examination search or an updated accelerated examination support document; or 3) present claims that are directed a non-elected invention or an invention other than that previously claimed and examined in the application, will be treated as not fully responsive and will not be entered.

For any amendment to the claims (including any new claim) that is not encompassed by the accelerated examination support document, applicant must provide an updated accelerated examination support document that encompasses the amended or new claims at the time of filing of the amendment.

To proceed expeditiously with the examination, it is recommended that a reply with amendments made to any claim or with any new claim being added be accompanied by an updated accelerated examination support document or a statement explaining how the amended or new claim is supported by the original accelerated examination support document.

6. Information Disclosure Statement (IDS):
Any IDS filed during prosecution must be submitted electronically via EFS or EFS-web, accompanied by an updated accelerated examination support document, and in compliance with 37 CFR 1.97 and 1.98.

7. Post-Allowance Processing:
To expedite processing of the allowed application into a patent, the applicant must: 1) pay the required fees within one month of the date of the Notice of Allowance, and 2) not file any post allowance papers not required by the Office. In no event may the issue fee be paid and accepted later than three months from the date of the Notice of Allowance.

8. After-Final and Appeal Procedures:
To expedite prosecution, after receiving the final Office action, applicant must: 1) promptly file a notice of appeal, an appeal brief and appeal fees; and 2) not request a pre-appeal brief conference.

Any amendment, affidavit or other evidence filed after final Office action must comply with applicable rules and the requirements outlined in numbered paragraphs 5 and 6 above.

On appeal, the application will proceed according to normal appeal procedures. After appeal, the application will again be treated special.

9. Proceedings Outside the Normal Examination Process:
If the application becomes involved in a proceeding that is outside the normal examination process (e.g., a secrecy order, national security review, interference proceeding, petitions under 37 CFR 1.181, 182 or 183), the application will be treated special before and after such proceeding.

10. Final Disposition:
The twelve-month goal of this accelerated examination procedure ends with a final disposition. The mailing of a final Office action, a Notice of Allowance, the filing of a Notice of Appeal, or the filing of a Request for Continued Examination (RCE) is the final disposition.

If, during prosecution, a paper is not filed electronically using EFS-web, a reply is filed but is not fully responsive, the application is involved in an appeal or a proceeding outside normal examination process, the application will still be examined expeditiously, however, the final disposition may occur more than twelve months from the filing of the application. In addition, Applicant is reminded that due to the dismissal of the previous petition submission, examination may not be completed within twelve months of the filing date of the application.

Any inquiry regarding this decision should be directed the undersigned whose telephone number is (571) 272-4147.

/bp/

Kim Huynh, Quality Assurance Specialist
Technology Center 2400,
Network, Multiplexing, Cable and Security

UNITED STATES PATENT AND TRADEMARK OFFICE

UNITED STATES DEPARTMENT OF COMMERCE
United States Patent and Trademark Office
Address: COMMISSIONER FOR PATENTS
P.O. Box 1450
Alexandria, Virginia 22313-1450
www.uspto.gov

APPLICATION NO.	FILING DATE	FIRST NAMED INVENTOR	ATTORNEY DOCKET NO.	CONFIRMATION NO.
12/193,374	08/18/2008	Jessica W. Ramirez	CAM920070195US2	4701

63605 7590 01/15/2009
CANTOR COLBURN LLP - IBM LOTUS
20 Church Street
22nd Floor
Hartford, CT 06103

EXAMINER
MAUNG, ZARNI

ART UNIT	PAPER NUMBER
2451	

NOTIFICATION DATE	DELIVERY MODE
01/15/2009	ELECTRONIC

Please find below and/or attached an Office communication concerning this application or proceeding.

The time period for reply, if any, is set in the attached communication.

Notice of the Office communication was sent electronically on above-indicated "Notification Date" to the following e-mail address(es):

usptopatentmail@cantorcolburn.com

UNITED STATES PATENT AND TRADEMARK OFFICE

Commissioner for Patents
United States Patent and Trademark Office
P.O. Box 1450
Alexandria, VA 22313-1450
www.uspto.gov

CANTOR COLBURN LLP - IBM LOTUS
20 Church Street
22nd Floor
Hartford CT 06103

MAILED

FEB 02 2009

TECHNOLOGY CENTER 2100

In re Application of: RAMIREZ, Jessica W., et. al.
Serial No.: **12/193,374**
Filed: August 18, 2008
Docket: CAM920070195US2
Title: METHOD OF BALANCING COMMUNICATION LOAD IN A SYSTEM BASED ON DETERMINATION OF USER-USER AFFINITY LEVELS

DECISION ON PETITION TO MAKE SPECIAL FOR NEW APPLICATION UNDER 37 C.F.R. § 1.102 & M.P.E.P. § 708.02

This is a decision on the petition filed on August 18, 2008 to make the above-identified application special for accelerated examination procedure under 37 C.F.R. § 1.102(d).

Clarification provided by Petitioner (LEVY, Howard Reg. No. 55,378) was provided on January 05, 2009 regarding the following minor informalities.

(i) Petitioner confirms that section "9(C) Detailed Explanation of Patentability" (page 6) of AESD inadvertently stating that "[t]he cited references jointly and separately each fail to disclose several of the features of claims **1-3** of the claimed invention", should be **one (1)** claim, as correctly stated on page 1 of the same document.

(ii) Petitioner confirms that section "9(E) Showing of Support under 35 USC 112, first paragraph" (last paragraph on page 11) of the AESD, inadvertently stating that "[t]he application does **not** claim benefit of any application", should state that the application does claim the benefit of one application, since this section has properly shown/mapped where each limitation of the claims finds support under 35 USC 112, first paragraph, in the written description of the specification of the parent application US Appl 12/014,162.

(iii) Petitioner does acknowledged with respect to the Pre-examination Search Document (PESD) that identified field of search by United States classes and subclass 345/743 and 370/675 are **not current US subclasses** but **old** classes/subclasses which in conjunction with the other indicated classes/subclasses were *searched in its entirety and not in combination with text search logic.* Petitioner will be mindful of this when updating his/her search.

(iv) Petitioner clarifies that classes/subclasses **709/100, 104, and 105** currently represent subclasses that have been **reclassified**. These subclasses have been transferred directly to a FOR Collection which contain ONLY Foreign patents or Non-patent Literature. Thus, inadvertently listed 709 subclasses **100, 104, and 105** should refer to Foreign collection, namely, FOR100, FOR104, and FOR105, respectively.

The Petitioner has clarify that the database service and filed searched for the FOR collection (FOR100, FOR104, and FOR105) are the same listed foreign patent or non-patent literature *files* used to perform the text search logic (on pages 2-4 of PESD) performed on August 14, 2008 using the MicroPatent database service.

The petition to make the application special is **GRANTED**.

The application is eligible for accelerated examination and the petition complies with the conditions for granting the application special status pursuant to the "Change to Practice for Petitions in Patent Applications to Make Special and for Accelerated Examination" published June 26, 2006, in the Federal Register. (71 Fed. Reg. 36323).

The prosecution of the instant application will be conducted expeditiously according to the following guidelines.

1. The application will be docketed to an examiner and taken up for action within two weeks of the date of this decision.

2. Restriction Practice:
   If the examiner determines that the claims are not directed to a single invention, a telephone request to elect one single invention will be made pursuant to MPEP 812.01. As a prerequisite to the grant of this petition, the applicant has agreed to make an oral election, by telephone, without traverse. If the applicant refuses to make an election without traverse, or the examiner cannot reach the applicant after a reasonable effort, the examiner will treat the first claimed invention (invention defined by claim 1) as having being constructively elected without traverse for examination.

3. Office action:
   If it is determined that, after appropriate consultation, there is a potential rejection or any other issue to be addressed, the examiner will telephone the applicant and arrange an interview to discuss and resolve the issue. An Office action, other than a Notice of Allowance and Fee(s) Due (Notice of Allowance), will not be issued unless either: 1) an interview was conducted but did not result in agreed to action that places the application in condition for allowance, or, 2) a determination is made that an interview would be unlikely to result in the application being placed in condition for allowance, and 3) an internal conference has been held to review any rejection of any claim.

4. Time for Reply:
   An Office action other than a Notice of Allowance or a final Office action will set a shortened statutory period of one month or thirty days, whichever is longer, for reply with no extension of time available under 37 CFR 1.136(a). Failure to

timely file a reply within this non-extendible period for reply will result in the abandonment of the application.

5. Reply by Applicant:
A timely reply to an Office action other than the Notice of Allowance must be submitted electronically via EFS or EFS-web and limited to addressing the rejections, objections and requirement made. Any amendment that attempts to: 1) add claims which would result in more than three pending independent claims or more than twenty pending total claims; 2) present claims not encompassed by the pre-examination search or an updated accelerated examination support document; or 3) present claims that are directed a non-elected invention or an invention other than that previously claimed and examined in the application, will be treated as not fully responsive and will not be entered.

For any amendment to the claims (including any new claim) that is not encompassed by the accelerated examination support document, applicant must provide an updated accelerated examination support document that encompasses the amended or new claims at the time of filing of the amendment.

To proceed expeditiously with the examination, it is recommended that a reply with amendments made to any claim or with any new claim being added be accompanied by an updated accelerated examination support document or a statement explaining how the amended or new claim is supported by the original accelerated examination support document.

6. Information Disclosure Statement (IDS):
Any IDS filed during prosecution must be submitted electronically via EFS or EFS-web, accompanied by an updated accelerated examination support document, and in compliance with 37 CFR 1.97 and 1.98.

7. Post-Allowance Processing:
To expedite processing of the allowed application into a patent, the applicant must: 1) pay the required fees within one month of the date of the Notice of Allowance, and 2) not file any post allowance papers not required by the Office. In no event may the issue fee be paid and accepted later than three months from the date of the Notice of Allowance.

8. After-Final and Appeal Procedures:
To expedite prosecution, after receiving the final Office action, applicant must: 1) promptly file a notice of appeal, an appeal brief and appeal fees; and 2) not request a pre-appeal brief conference.

Any amendment, affidavit or other evidence filed after final Office action must comply with applicable rules and the requirements outlined in numbered paragraphs 5 and 6 above.

On appeal, the application will proceed according to normal appeal procedures. After appeal, the application will again be treated special.

9. Proceedings Outside the Normal Examination Process:
   If the application becomes involved in a proceeding that is outside the normal examination process (e.g., a secrecy order, national security review, interference proceeding, petitions under 37 CFR 1.181, 182 or 183), the application will be treated special before and after such proceeding.

10. Final Disposition:
    The twelve-month goal of this accelerated examination procedure ends with a final disposition. The mailing of a final Office action, a Notice of Allowance, the filing of a Notice of Appeal, or the filing of a Request for Continued Examination (RCE) is the final disposition.

If, during prosecution, a paper is not filed electronically using EFS-web, a reply is filed but is not fully responsive, the application is involved in an appeal or a proceeding outside normal examination process, the application will still be examined expeditiously, however, the final disposition may occur more than twelve months from the filing of the application. In addition, Applicant is reminded that due to the dismissal of the previous petition submission, examination may not be completed within twelve months of the filing date of the application.

Any inquiry regarding this decision should be directed the undersigned whose telephone number is (571) 272-4147.

/bp/

Kim Huynh, Quality Assurance Specialist
Technology Center 2400,
Network, Multiplexing, Cable and Security

UNITED STATES PATENT AND TRADEMARK OFFICE

UNITED STATES DEPARTMENT OF COMMERCE
United States Patent and Trademark Office
Address: COMMISSIONER FOR PATENTS
P.O. Box 1450
Alexandria, Virginia 22313-1450
www.uspto.gov

APPLICATION NO.	FILING DATE	FIRST NAMED INVENTOR	ATTORNEY DOCKET NO.	CONFIRMATION NO.
12/193,374	08/18/2008	Jessica W. Ramirez	CAM920070195US2	4701

63605 7590 02/03/2009
CANTOR COLBURN LLP - IBM LOTUS
20 Church Street
22nd Floor
Hartford, CT 06103

EXAMINER
MAUNG, ZARNI

ART UNIT	PAPER NUMBER
2451	

NOTIFICATION DATE	DELIVERY MODE
02/03/2009	ELECTRONIC

Please find below and/or attached an Office communication concerning this application or proceeding.

The time period for reply, if any, is set in the attached communication.

Notice of the Office communication was sent electronically on above-indicated "Notification Date" to the following e-mail address(es):

usptopatentmail@cantorcolburn.com

UNITED STATES PATENT AND TRADEMARK OFFICE

Commissioner for Patents
United States Patent and Trademark Office
P.O. Box 1450
Alexandria, VA 22313-1450
www.uspto.gov

TEXAS INSTRUMENTS INCORPORATED
P O BOX 655474, M/S 3999
DALLAS TX 75265

MAILED

AUG 25 2009

OFFICE OF PETITIONS

In re Application of	:	
Uchino et al.	:	
Application No. 12/193,410	:	DECISION ON PETITION
Filed: August 18, 2008	:	
Attorney Docket No. TI-65155	:	

This is a decision on the petition under the unintentional provisions of 37 CFR 1.137(b), filed July 8, 2009, to revive the above-identified application.

The petition is **GRANTED**.

The application became abandoned for failure to reply in a timely manner to the Notice to File Missing Parts of Nonprovisional Application (Notice), mailed September 30, 2008. The Notice set a period for reply of two (2) months from the mail date of the Notice. No extensions of time under the provisions of 37 CFR 1.136(a) were obtained. Accordingly, the application became abandoned on December 1, 2008. A Notice of Abandonment was mailed June 12, 2009.

The petition satisfies the requirements of 37 CFR 1.137(b) in that petitioner has supplied (1) the reply in the form of an Oath or Declaration, the $130.00 surcharge fee, and Replacement drawings, (2) the petition fee of $1,620.00, and (3) a proper statement of unintentional delay.

Telephone inquiries concerning this decision should be directed to the undersigned at (571) 272-7751.

This application is being referred to the Office of Patent Application Processing for further processing in accordance with this decision on petition.

Joan Olszewski
Petitioner Examiner
Office of Petitions

UNITED STATES PATENT AND TRADEMARK OFFICE

Commissioner for Patents
United States Patent and Trademark Office
P.O. Box 1450
Alexandria, VA 22313-1450
www.uspto.gov

IPHORGAN, LTD.
1130 LAKE COOK ROAD
SUITE 240
BUFFALO GROVE, IL 60089

MAILED

MAY 03 2010

OFFICE OF PETITIONS

In re Application of	:	
Mamad Jahani et al	:	
Application No. 12/193,417	:	DECISION ON PETITION
Filed: August 18, 2008	:	TO WITHDRAW
Attorney Docket No. BCG 0004 US	:	FROM RECORD
	:	

This is a decision on the Request to Withdraw as attorney or agent under 37 C.F.R. § 1.36(b) or 37 C.F.R. § 10.40 filed February 23, 2010.

The request is **APPROVED**.

A review of the file record indicates that Max Shafta: (1) does not have power of attorney in this patent application; and (2) has been employed or otherwise engaged in the proceedings in this patent application. In view of the present decision, Max Shafta has been withdrawn from the present application and may not prepare or submit papers under 37 C.F.R. § 1.34, or correspond in any manner in this application unless appointed in an acceptable power of attorney under 37 C.F.R. § 1.32(b).

Telephone inquires concerning this decision should be directed to Irvin Dingle at 571-272-3210.

Irvin Dingle
Petitions Examiner
Office of Petitions

cc: Max Shafta
Patzik Frank & Samotny Ltd.
150 S. Wacker Drive, Suite 1500
Chicago, IL 60606

UNITED STATES PATENT AND TRADEMARK OFFICE

Commissioner for Patents
United States Patent and Trademark Office
P.O. Box 1450
Alexandria, VA 22313-1450
www.uspto.gov

HOLLAND & KNIGHT, LLP
10 ST. JAMES AVENUE
BOSTON, MA 02116-3889

COPY MAILED

SEP 16 2009

OFFICE OF PETITIONS

In re Application of Gideon L. Gartner Application No. 12/193,444 Filed: August 18, 2008 Attorney Docket No. 109351.00012	DECISION ON PETITION TO MAKE SPECIAL UNDER 37 CFR 1.102(c)(1)

This is a decision on the petition under 37 CFR 1.102(c)(1), filed July 22, 2009, to make the above-identified application special based on applicant's age as set forth in M.P.E.P. § 708.02, Section IV.

The petition is **GRANTED**.

A grantable petition to make an application special under 37 CFR 1.102(c)(1) and MPEP § 708.02, Section IV: Applicant's Age must be accompanied by evidence showing that at least one of the applicants is 65 years of age, or more, such as a birth certificate or a statement by applicant. No fee is required

The instant petition includes a statement from the inventor that he is over 65 years of age. Accordingly, the above-identified application has been accorded "special" status.

The application is being forwarded to the Technology Center Art Unit 3721 for action on the merits commensurate with this decision.

Telephone inquiries concerning this decision should be directed to the undersigned at (571) 272-3226.

All other inquiries concerning either the examination or status of the application should be directed to the Technology Center.

Andrea Smith
Petitions Examiner
Office of Petitions

UNITED STATES PATENT AND TRADEMARK OFFICE

Commissioner for Patents
United States Patent and Trademark Office
P.O. Box 1450
Alexandria, VA 22313-1450
www.uspto.gov

HOLLAND & KNIGHT LLP
10 ST. JAMES AVENUE
BOSTON, MA 02116-3889

COPY MAILED

DEC 29 2009

OFFICE OF PETITIONS

In re Application of	:	
Gideon Gartner	:	
Application No. 12/193,444	:	DECISION ON PETITION
Filed: August 18, 2008	:	TO WITHDRAW
Attorney Docket No. 109351.00012	:	FROM RECORD
	:	

This is a decision on the Request to Withdraw as attorney or agent of record under 37 C.F.R. § 1.36(b), filed October 15, 2009.

The request is **APPROVED**.

A grantable request to withdraw as attorney/agent of record must be signed by every attorney/agent seeking to withdraw or contain a clear indication that one attorney is signing on behalf of another/others.

The request was signed by Brian J. Colandreo on behalf of all attorneys of record who are associated with customer No. 54975. All attorneys/agents associated with the Customer Number 54975 have been withdrawn. Applicant is reminded that there is no attorney of record at this time.

The correspondence address of record has been changed and the new correspondence address is the address indicated below.

There is an outstanding Office action mailed October 15, 2009 that requires a reply from the applicant.

Telephone inquiries concerning this decision should be directed to undersigned at 571-272-1642. All other inquiries concerning the examination or status of this application should be directed to the Technology Center.

/AMW/
April M. Wise
Petitions Examiner
Office of Petitions

cc: GIDEON I. GARTNER
101 WEST 67TH STREET
NEW YORK, NY 10023

UNITED STATES PATENT AND TRADEMARK OFFICE

Commissioner for Patents
United States Patent and Trademark Office
P.O. Box 1450
Alexandria, VA 22313-1450
www.uspto.gov

HOLLAND & KNIGHT, LLP
10 ST. JAMES AVENUE
BOSTON, MA 02116-3889

COPY MAILED

SEP 16 2009

OFFICE OF PETITIONS

In re Application of Gideon L. Gartner Application No. 12/193,454 Filed: August 18, 2008 Attorney Docket No. 109351.00014	DECISION ON PETITION TO MAKE SPECIAL UNDER 37 CFR 1.102(c)(1)

This is a decision on the petition under 37 CFR 1.102(c)(1), filed July 22, 2009, to make the above-identified application special based on applicant's age as set forth in M.P.E.P. § 708.02, Section IV.

The petition is **GRANTED**.

A grantable petition to make an application special under 37 CFR 1.102(c)(1) and MPEP § 708.02, Section IV: Applicant's Age must be accompanied by evidence showing that at least one of the applicants is 65 years of age, or more, such as a birth certificate or a statement by applicant. No fee is required

The instant petition includes a statement from the inventor that he is over 65 years of age. Accordingly, the above-identified application has been accorded "special" status.

The application is being forwarded to the Technology Center Art Unit 3721 for action on the merits commensurate with this decision.

Telephone inquiries concerning this decision should be directed to the undersigned at (571) 272-3226.

All other inquiries concerning either the examination or status of the application should be directed to the Technology Center.

Andrea Smith
Petitions Examiner
Office of Petitions

UNITED STATES PATENT AND TRADEMARK OFFICE

Commissioner for Patents
United States Patent and Trademark Office
P.O. Box 1450
Alexandria, VA 22313-1450
www.uspto.gov

HOLLAND & KNIGHT LLP
10 ST. JAMES AVENUE
BOSTON, MA 02116-3889

COPY MAILED

DEC 29 2009

OFFICE OF PETITIONS

In re Application of	:	
Gideon T. Gartner	:	
Application No. 12/193,454	:	DECISION ON PETITION
Filed: August 18, 2008	:	TO WITHDRAW
Attorney Docket No. 109351.00014	:	FROM RECORD
	:	

This is a decision on the Request to Withdraw as attorney or agent of record under 37 C.F.R. § 1.36(b), filed October 15, 2009.

The request is **APPROVED**.

A grantable request to withdraw as attorney/agent of record must be signed by every attorney/agent seeking to withdraw or contain a clear indication that one attorney is signing on behalf of another/others. A request to withdraw will not be approved unless at least 30 (thirty) days would remain

The request was signed by Brian J. Colandreo on behalf of all attorneys of record who are associated with customer No. 54975. All attorneys/agents associated with the Customer Number 54975 have been withdrawn. Applicant is reminded that there is no attorney of record at this time.

The correspondence address of record has been changed and the new correspondence address is the address indicated below.

There are no pending Office actions at the present time.

Telephone inquiries concerning this decision should be directed to undersigned at 571-272-1642. All other inquiries concerning the examination or status of this application should be directed to the Technology Center.

/AMW/
April M. Wise
Petitions Examiner
Office of Petitions

cc: GIDEON I. GARTNER
101 WEST 67TH STREET
NEW YORK, NY 10023

UNITED STATES PATENT AND TRADEMARK OFFICE

UNITED STATES DEPARTMENT OF COMMERCE
United States Patent and Trademark Office
Address: COMMISSIONER FOR PATENTS
P.O. Box 1450
Alexandria, Virginia 22313-1450
www.uspto.gov

APPLICATION NUMBER	FILING OR 371(C) DATE	FIRST NAMED APPLICANT	ATTY. DOCKET NO./TITLE
12/193,454	08/18/2008	GIDEON I. GARTNER	109351.00014

CONFIRMATION NO. 4847

POWER OF ATTORNEY NOTICE

54975
HOLLAND & KNIGHT LLP
10 ST. JAMES AVENUE
BOSTON, MA 02116-3889

OC000000039177798

Date Mailed: 12/10/2009

NOTICE REGARDING CHANGE OF POWER OF ATTORNEY

This is in response to the Power of Attorney filed 10/15/2009.

- The withdrawal as attorney in this application has been accepted. Future correspondence will be mailed to the new address of record. 37 CFR 1.33.

/amwise/

Office of Data Management, Application Assistance Unit (571) 272-4000, or (571) 272-4200, or 1-888-786-0101

UNITED STATES PATENT AND TRADEMARK OFFICE

Commissioner for Patents
United States Patent and Trademark Office
P.O. Box 1450
Alexandria, VA 22313-1450
www.uspto.gov

DICKINSON WRIGHT, PLLC
1875 EYE STREET, NW
SUITE 1200
WASHINGTON, DC 20006

MAILED

JUN 30 2010

OFFICE OF PETITIONS

In re Application of	:	
Bunge et al.	:	DECISION ON PETITION
Application No. 12/193,459	:	TO WITHDRAW
Filed: August 18, 2008	:	FROM RECORD
Attorney Docket No. 119010-414	:	

This is a decision on the Request to Withdraw as attorney or agent of record under 37 C.F.R. § 1.36(b), filed May 31, 2010.

The request is **NOT APPROVED** because it is moot.

A review of the file record indicates that on June 30, 2010 the power of attorney to Dickinson Wright, PLLC was revoked by the assignee of the patent application. Accordingly, the request to withdraw under 37 C.F.R. § 1.36(b) is moot.

All future communications from the Office will be directed to the below-listed address until otherwise notified by applicant.

Telephone inquires concerning this decision should be directed to the undersigned at 571-272- 7751. All other inquires concerning either the examination or status of the application should be directed to the Technology Center.

Joan Olszewski

Joan Olszewski
Petitions Examiner
Office of Petitions

cc: LERNER GREENBERG STEMER LLP
P O BOX 2480
HOLLYWOOD FL 33022-2480

UNITED STATES PATENT AND TRADEMARK OFFICE

COMMISSIONER FOR PATENTS
UNITED STATES PATENT AND TRADEMARK OFFICE
P.O. BOX 1450
ALEXANDRIA, VA 22313-1450
www.uspto.gov

ALLERGAN, INC.
2525 DUPONT DRIVE, T2-7H
IRVINE, CA 92612-1599

Applicant: J.O. Dolly, et al.
Appl. No.: 12/193,527
Filing Date: August 18, 2008
Title: Activatable Recombinant Neurotoxin
Pub. No.: US 2009/0081730 A1
Pub. Date: March 26, 2009

COPY MAILED
JAN 22 2010

This is a decision on the request for a corrected patent application publication under 37 CFR 1.221(b) or (a), received on April 13, 2009, for the above-identified application.

The request is DISMISSED.

Applicant requests that the application be republished because the patent application publication contains material errors on the front page of the publication wherein the Related U.S. Application Data is incorrect and many errors through the specification.

37 CFR 1.221 (b) is applicable "only when the Office makes a material mistake which is apparent from Office records.... Any request for a corrected publication or revised patent application publication other than provided as provided in paragraph (a) of this section must be filed within two months from the date of the patent application publication. This period is not extendable." A material mistake must affect the public's ability to appreciate the technical disclosure of the patent application publication, to determine the scope of the patent application publication, or to determine the scope of the provisional rights that an applicant may seek to enforce upon issuance of a patent. [1]

The error to the continuation data on the front of the publication is not a material Office under 37 CFR 1.221. The first paragraph of the specification contains the continuation data, thus one can read and understand the content of the application. Moreover, the misprint does not affect the understanding of the application. The mistake does not affect the public's ability to appreciate the technical disclosure of the patent application publication, or determine the scope of the patent application publication or determine the scope of the provisional rights that an applicant may seek to enforce upon issuance of a patent.

[1] Changes to Implement Eighteen-Month Publication of Patent Applications, 65 FR 57023, 57038 (Sept. 20, 2000), 1239, Off. Gaz. Pat. Office Notices 63, 75 (Oct. 10, 2000) (final rule).

The benefit claim in the first line of the specification is confusing. It would facilitate examination of the application if applicant followed the examples in the MPEP 201.11 for example:

> This application is a continuation of U.S. Application No. 10/---, filed ---, which claims the benefit of U.S. Provisional Application No. 60/---, filed ---.
>
> This application is a continuation of Application No. C, filed ---, which is a continuation of Application No. B, filed ---, which claims the benefit of provisional Application No. A, filed ---.

The error's noted by requestor with respect to the preliminary amendment are not Office errors. The patent application publication does not include a mistake regarding the failure to include the preliminary amendment to the specification because patent application publications are not required to include preliminary amendments. See 37 CFR 1.215(a). The "failure to include an amendment is not an Office error," See MPEP 1130(B).

The applicant is advised that a "request for republication of an application previously published" may be filed under 37 CFR 1.221(a). Such a request for republication "must include a copy of the application compliance with the Office's electronic filing system requirements and be accompanied by the publication fee set forth in § 1.18(d) and the processing fee set forth in § 1.17(i)." If the request for republication does not comply with the electronic filing system requirements, the republication will not take place and the publication fee set forth in § 1.18(d) will be refunded. The processing fee will be retained.

A guide for filing a request for a Pre-Grant Publication, such as a request for republication, may be found on the link below:

http://www.uspto.gov/ebc/portal/tutorials.htm

Any request for republication under 37 CFR 1.221(a), must be submitted via the EFS system, as a "Pre-Grant Publication".

Inquiries relating to this matter may be directed to Mark Polutta at (571) 272-7709.

Mark Polutta
Senior Legal Advisor
Office of Patent Legal Administration
Office of the Deputy Commissioner
for Patent Examination Policy

UNITED STATES PATENT AND TRADEMARK OFFICE

Commissioner for Patents
United States Patent and Trademark Office
P.O. Box 1450
Alexandria, VA 22313-1450
www.uspto.gov

TUCKER ELLIS & WEST LLP
1150 HUNTINGTON BUILDING
925 EUCLID AVENUE
CLEVELAND OH 44115-1414

COPY MAILED
MAY 27 2009
OFFICE OF PETITIONS

In re Application of
Nguyen, et al.
Application No. 12/193,545
Filed: 18 August, 2008
Attorney Docket No. 66329/00765

DECISION ON PETITION

This is in response to the petition filed on 27 March, 2009, (improvidently under37 C.F.R. §1.47(b)) and properly considered under 37 C.F.R. §1.47(a).

The petition as considered under 37 C.F.R. §1.47(a) is **DISMISSED**.

Rule 47 applicant is given TWO (2) MONTHS from the mailing date of this decision to reply, correcting the below-noted deficiencies. Any reply should be entitled "Request for Reconsideration of Petition Under 37 C.F.R. §1.47(a)," and should only address the deficiencies noted below, except that the reply may include an oath or declaration executed by the non-signing inventor. **FAILURE TO RESPOND WILL RESULT IN ABANDONMENT OF THE APPLICATION.** Any extensions of time will be governed by 37 C.F.R. §1.136(a).

This is **not** a final agency action within the meaning of 5 U.S.C. §704.

A grantable petition under 37 C.F.R. §1.47(a) requires: (1) petition and fee; (2) proof that the non-signing inventor cannot be reached or refuses to sign the oath or declaration after having been presented with the application papers (specification: description, claims and drawings); (3) an acceptable oath or declaration in compliance with 35 U.S.C. §§ 115 and 116; and (4) a statement of the last known address of the non-signing inventor(s)—with a showing of diligence in the effort to ascertain the validity of the address set forth as the reasonably believed to be last known/current/valid address.

Petitioner does not seem to have worked through the requirements of the petition, as set forth above, in satisfaction of those requirements. (*See* MPEP §409.03, and §409.03(a), et seq. Petitioners always are reminded that, as to proof that the non-signing inventor cannot be reached or refuses to sign the oath or declaration after having been presented with the application papers

(specification: description, claims and drawings): the applicable statute (35 U.S.C.§ 116) requires that a "diligent effort" have been expended in attempting to find or reach the non-signing inventor. *See* MPEP §409.03, and §409.03(a) and (e): "a *bona fide* attempt.")

Petitioner has failed to provide the requirements under the regulation, including: proof that the non-signing inventor cannot be reached or refuses to sign the oath or declaration after having been presented with the application papers (specification: description, claims and drawings), supported by a statement of the last known address of the non-signing inventor(s)—with a showing of diligence in the effort to ascertain the validity of the address set forth as the reasonably believed to be last known/current/valid address.

These matters must be clarified on any renewed petition.

BACKGROUND

The record indicates:

The instant application was filed on 18 August, 2008, without, *inter alia*, a fully executed oath/declaration.

On 29 August, 2008, the Office mailed a Notice of Missing Parts indicating, *inter alia*, that a fully executed oath/declaration (signed and dated) was required.

On 27 March, 2009, Petitioner Christian R. Drago (Reg. No. 52,472) filed, *inter alia*, a two-page petition with supporting documentation, that was little more than a brief statement by a Mr. Yeung of the averred assignee and two copies of the application, an oath/declaration signed by co-inventors Kuwata and Su on behalf of themselves and non-signing co-inventor Truc Nguyen—however, Petitioner fails to provide the requirements under the regulation, including a proper showing/evidence (e.g., with copies of transmittal letters with courier or U.S. Postal Service tracking information evidencing success/failure of delivery) that the non-signing inventor(s) cannot be reached or refuses to sign the oath or declaration after having been presented with the application papers (specification: description, claims and drawings); and a statement of the last known address of the non-signing inventor(s)—with a showing of diligence in the effort to ascertain the validity of the address set forth as the reasonably believed to be last known/current/valid address.

Thus, Petitioner does not seemed to have worked through the requirements of the petition, as set forth above, in satisfaction of those requirements. (*See* MPEP §409.03, and §409.03(a), et seq. Petitioners always are reminded that, as to proof that the non-signing inventor cannot be reached or refuses to sign the oath or declaration after having been presented with the application papers (specification: description, claims and drawings): the applicable statute (35 U.S.C.§ 116) requires that a "diligent effort" have been expended in attempting to find or reach the non-signing inventor. *See* MPEP §409.03, and §409.03(a) and (e): "a *bona fide* attempt.")

Further, Petitioners always are reminded that for transmission by Email of any document to be accepted by the Office, written acknowledgment of receipt and readability will be required.

As set forth above, any renewed petition **must** clarify these items.

The availability of applications and application papers online to applicants/practitioners who diligently associate their Customer Number with the respective application(s) now provides an applicant/practitioner on-demand information as to events/transactions in an application. Thus, now if one wishes to know the progress in and/or status of an application or the accuracy of the data therein, one need only look at the file online.

Out of an abundance of caution, Petitioners always are reminded that those registered to practice *and* all others who make representations before the Office must inquire into the underlying facts of representations made to the Office and support averments with the appropriate documentation–since all owe to the Office the continuing duty to disclose.[1]

The instant petition under 37 C.F.R. §1.47(a) is **dismissed**.

Further correspondence with respect to this matter should be addressed as follows:

By mail: Mail Stop PETITIONS
Commissioner for Patents
Post Office Box 1450
Alexandria, VA 22313-1450

By hand: Customer Service Window
Mail Stop Petitions
Randolph Building
401 Dulany Street
Alexandria, VA 22314

By FAX: (571) 273-8300
ATTN: Office of Petitions

[1] See supplement of 17 June, 1999. The Patent and Trademark Office is relying on petitioner's duty of candor and good faith and accepting a statement made by Petitioner. See Changes to Patent Practice and Procedure, 62 Fed. Reg. at 53160 and 53178, 1203 Off. Gaz. Pat. Office at 88 and 103 (responses to comments 64 and 109)(applicant obligated under 37 C.F.R. §10.18 to inquire into the underlying facts and circumstances when providing statements to the Patent and Trademark Office). See specifically, the regulations at 37 C.F.R. §10.18.

While telephone inquiries regarding this decision may be directed to the undersigned at (571) 272-3214, it is noted that all practice before the Office is in writing (see: 37 C.F.R. §1.2[2]) and the proper authority for action on any matter in this regard are the statutes (35 U.S.C.), regulations (37 C.F.R.) and the commentary on policy (MPEP). Therefore, no telephone discussion may be controlling or considered authority for Petitioner's action(s).

/John J. Gillon, Jr./
John J. Gillon, Jr.
Senior Attorney
Office of Petitions

---

[2] The regulations at 37 C.F.R. §1.2 provide:

§1.2 Business to be transacted in writing.

All business with the Patent and Trademark Office should be transacted in writing. The personal attendance of applicants or their attorneys or agents at the Patent and Trademark Office is unnecessary. The action of the Patent and Trademark Office will be based exclusively on the written record in the Office. No attention will be paid to any alleged oral promise, stipulation, or understanding in relation to which there is disagreement or doubt.

UNITED STATES PATENT AND TRADEMARK OFFICE

Commissioner for Patents
United States Patent and Trademark Office
P.O. Box 1450
Alexandria, VA 22313-1450
www.uspto.gov

IBM CORPORATION (OLP)
C/O ORTIZ & LOPEZ PLLC
PO BOX 4484
ALBUQUERQUE NM 87196-4484

COPY MAILED

APR 13 2009

OFFICE OF PETITIONS

In re Application of	:	
Gangemi, et al.	:	
Application No. 12/193,556	:	DECISION REFUSING STATUS
Filed: August 18, 2008	:	UNDER 37 CFR 1.47(a)
Attorney Docket No. FR920050089US1	:	

This is in response to the petition under 37 CFR 1.47, filed September 9, 2008, which is properly treated as a petition under 37 CFR 1.47(a).

The petition under 37 CFR 1.47(a) is **DISMISSED**.

Rule 47 applicant is given TWO MONTHS from the mailing date of this decision to reply, correcting the below-noted deficiencies. Any reply should be entitled "Request for Reconsideration of Petition Under 37 CFR 1.47(a)," and should only address the deficiencies noted below, except that the reply may include an oath or declaration executed by the non-signing inventor. **Failure to respond will result in abandonment of the application.** Any extensions of time will be governed by 37 CFR 1.136(a).

A grantable petition under 37 CFR 1.47(a) requires: (1) proof that the non-signing inventor cannot be reached after diligent effort or refuses to sign the oath or declaration after having been presented with the application papers (specification, claims, drawings, oath or declaration); (2) an acceptable oath or declaration in compliance with 37 CFR 1.63; (3) the petition fee; and (4) a statement of the last known address of the non-signing inventor. Rule 47 applicant has not met requirement (1) above.

Regarding an inventor's refusal to join in the application, Manual of Patent Examining Procedure § 409.03(d) states:

> It is reasonable to require that the inventor be presented with the application papers before a petition under 37 CFR 1.47 is granted since such a procedure ensures that the inventor is apprised of the application to which the oath or declaration is directed. In re Gray, 115 U.S.P.Q. 80 (Comm'r Pat. 1956).

Here, Rule 47 applicant states that Terenzi can not be found, yet at the same time, has provided Terenzi's last known address. As such, the application papers should be forwarded to the last known address. If no response is received, petitioner should state so for the record on renewed petition, and this lack of a response from Terenzi will be construed by the Office as a refusal to sign. On the other hand, if the papers are returned as undeliverable, petitioner should then specify what steps were taken to subsequently located Terenzi. With respect to showing diligent effort, "an affidavit or declaration of facts should be submitted that fully describes the exact facts which are relied on to establish that a diligent effort was made." Applicant should provide documentary evidence, such as a copy of an internet search, to support such a finding[1].

Further correspondence with respect to this matter should be addressed as follows:

By mail: Mail Stop Petitions
Commissioner for Patents
P.O. Box 1450
Alexandria VA 22313-1450

By FAX: (571)273-8300
Attn: Office of Petitions

Telephone inquiries related to this decision may be directed to the undersigned at (571)272-3207.

Cliff Congo
Petitions Attorney
Office of Petitions

---

[1] Such documentary evidence should be made part of the affidavit or declaration. See id.

UNITED STATES PATENT AND TRADEMARK OFFICE

Commissioner for Patents
United States Patent and Trademark Office
P.O. Box 1450
Alexandria, VA 22313-1450
www.uspto.gov

MAILED

OCT 08 2008

TECHNOLOGY CENTER 2100

SHIMOKAJI & ASSOCIATES, P.C.
8911 RESEARCH DRIVE
IRVINE CA 92618

In re Application of: Koichi KIMOJO
Application No. 12/193,569
Filed: August 18, 2008
For: ENCRYPTED COMMUNICATION FOR SELECTIVELY DELIVERING A MESSAGE TO MULTIPLE DECRYPTING DEVICES

DECISION ON REQUEST TO PARTICIPATE IN PATENT PROSECUTION HIGHWAY PILOT PROGRAM AND PETITION TO MAKE SPECIAL UNDER 37 CFR 1.102(d)

This is a decision on the request to participate in the Patent Prosecution Highway (PPH) program and the petition under 37 CFR 1.102(d), filed August 19, 2008, to make the above-identified application special.

The request and petition are **GRANTED**.

A grantable request to participate in the PPH pilot program and petition to make special require:

(1) The U.S. application must validly claim priority under 35 U.S.C. 119(a) to one or more applications filed in the JPO;

(2) Applicant must submit a copy of the allowable/patentable claim(s) from the JPO application(s) along with an English translation thereof and a statement that the English translation is accurate;

(3) All the claims in the U.S. application must sufficiently correspond or be amended to sufficiently correspond to the allowable/patentable claim(s) in the JPO application(s);

(4) Examination of the U.S. application has not begun;

(5) Applicant must submit a copy of all the office actions from each of the JPO application(s) containing the allowable/patentable claim(s) along with an English translation thereof and a statement that the English translation is accurate;

(6) Applicant must submit an IDS listing the documents cited by the JPO examiner in the JPO office action along with copies of documents except U.S. patents or U.S. patent application publications; and

(7) The required petition fee under 37 CFR 1.17(h).

The request to participate in the PPH pilot program and petition are found to comply with the above requirements. Accordingly, the above-identified application has been accorded "special" status.

Telephone inquiries concerning this decision should be directed to Mano Padmanabhan at 571-272-4210.

All other inquiries concerning the examination or status of the application is accessible in the PAIR system at http://www.uspto.gov/ebc/index.html.

The application is being forwarded to the examiner for action on the merits commensurate with this decision.

/Mano Padmanabhan/

Mano Padmanabhan
Quality Assurance Specialist, Technology Center 2100, Workgroup 2180
571-272-4210

UNITED STATES PATENT AND TRADEMARK OFFICE

Commissioner for Patents
United States Patent and Trademark Office
P.O. Box 1450
Alexandria, VA 22313-1450
www.uspto.gov

OPTIMAL TECHNOLOGIES, INC.
1001 WEST 4TH ST.
WINSTON-SALEM, NC 27101

MAILED

APR 28 2010

OFFICE OF PETITIONS

In re Application of	:	
Schoettle et al.	:	DECISION ON PETITION
Application No. 12/193,589	:	TO WITHDRAW
Filed: August 18, 2008	:	FROM RECORD
Attorney Docket No. 74268/P030US/10704964	:	

This is a decision on the Request to Withdraw as attorney or agent of record under 37 C.F.R. § 1.36(b), filed on March 4, 2010.

The request is **NOT APPROVED**.

The Office will only accept correspondence address changes to the most current address information provided for the assignee of the entire interest *who properly became of record under 37 CFR 3.71,* or, if no assignee of the entire interest has properly been made of record, the most current address information provided for the first named inventor. 37 CFR 3.71(c) states:

> *An assignee becomes of record either in a national patent application or a reexamination proceeding by filing a statement in compliance with § 3.73(b) that is signed by a party who is authorized to act on behalf of the assignee.*

As there is no Statement under 37 CFR 3.73(b) from Optimal Technologies Inc. in the instant application, the request cannot be granted. All future communications from the Office will be directed to above-listed address until otherwise properly notified by the applicant or a proper change of correspondence address have been submitted.

All future communications from the Office will be directed to above-listed address until otherwise properly notified by the applicant or a proper change of correspondence address have been submitted.

There are no outstanding Office actions that require a reply from the applicant.

Telephone inquires concerning this decision should be directed to the undersigned at (571) 272-6059. All other inquires concerning either the examination or status of the application should be directed to the Technology Center.

Alicia Kelley
Petitions Examiner
Office of Petitions

UNITED STATES PATENT AND TRADEMARK OFFICE

Commissioner for Patents
United States Patent and Trademark Office
P.O. Box 1450
Alexandria, VA 22313-1450
www.uspto.gov

RIGEL PHARMACEUTICALS INC.
C/O FOLEY & LARDNER LLP
975 PAGE MILL ROAD
PALO ALTO, CA 94304

COPY MAILED

JUN 2 3 2009

OFFICE OF PETITIONS

In re Application of	:	
Li et al.	:	DECISION ON PETITION
Application No. 12/193,627	:	TO WITHDRAW
Filed: August 18, 2008	:	FROM RECORD
Attorney Docket No.	:	
RIGLP002C7/P.0192.16.US.U		

This is a decision on the Request to Withdraw as attorney or agent of record under 37 C.F.R. § 1.36(b), filed May 14, 2009.

The request is **NOT APPROVED** because it is moot.

A review of the file record indicates that on June 4, 2009 the power of attorney to Foley & Lardner, LLP was revoked by the assignee of the patent application. Accordingly, the request to withdraw under 37 C.F.R. § 1.36(b) is moot.

All future communications from the Office will be directed to the below-listed address until otherwise notified by applicant.

Telephone inquires concerning this decision should be directed to the undersigned at 571-272- 7751. All other inquires concerning either the examination or status of the application should be directed to the Technology Center.

Joan Olszewski
Petitions Examiner
Office of Petitions

cc: Weaver Austin Villeneuve & Sampson LLP
P.O. Box 70250
Oakland CA 94612-0250

UNITED STATES PATENT AND TRADEMARK OFFICE

Commissioner for Patents
United States Patent and Trademark Office
P.O. Box 1450
Alexandria, VA 22313-1450
www.uspto.gov

Townsend and Townsend and Crew, LLP
Two Embarcadero Center
Eighth Floor
San Francisco, CA 94111-3834

MAILED

JUL 0 8 2009

OFFICE OF PETITIONS

In re Application of	:	
John Louis Warpakowski Furlan	:	
Application No. 12/193,636	:	DECISION ON PETITION
Filed: August 18, 2008	:	TO WITHDRAW
Attorney Docket No. 027643-001010US	:	FROM RECORD
	:	

This is a decision on the Request to Withdraw as attorney or agent of record under 37 C.F.R. § 1.36(b), filed June 5, 2009.

The request is **APPROVED**.

A grantable request to withdraw as attorney/agent of record must be signed by every attorney/agent seeking to withdraw or contain a clear indication that one attorney is signing on behalf of another/others. A request to withdraw will not be approved unless at least 30 (thirty) days would remain between the date of approval and the later of the expiration date of a time to file a response or the expiration date of the maximum time period which can be extended under 37 C.F.R. § 1.136(a).

The request was signed by Craig C. Largent on behalf of all attorneys of record. All attorneys/agents have been withdrawn. Applicant is reminded that there is no attorney of record at this time.

The request to change the correspondence of record is not acceptable as the requested correspondence address is not that of: (1) the first named signing inventor; or (2) an intervening assignee of the entire interest under 37 C.F.R 3.71. All future communications from the Office will be directed to the first named signing inventor at the first copied address below until otherwise properly notified by the applicant.

Telephone inquiries concerning this decision should be directed to Terri Williams at 571-272-2991.

Terri Williams
Petitions Examiner
Office of Petitions

cc: **John Louis Warpakowski Furlan**
1807 Oak Knoll Drive
Belmont, CA 94002

cc: **John Carey**
PATTERSON & SHERIDAN, L.L.P.
250 Cambridge Ave., Suite 3000
Palo Alto, CA 94306

UNITED STATES PATENT AND TRADEMARK OFFICE

UNITED STATES DEPARTMENT OF COMMERCE
United States Patent and Trademark Office
Address: COMMISSIONER FOR PATENTS
P.O. Box 1450
Alexandria, Virginia 22313-1450
www.uspto.gov

APPLICATION NUMBER	FILING OR 371(C) DATE	FIRST NAMED APPLICANT	ATTY. DOCKET NO./TITLE
12/193,636	08/18/2008	John Louis Warpakowski Furlan	027643-001010US

CONFIRMATION NO. 5228

POWER OF ATTORNEY NOTICE

20350
TOWNSEND AND TOWNSEND AND CREW, LLP
TWO EMBARCADERO CENTER
EIGHTH FLOOR
SAN FRANCISCO, CA 94111-3834

OC000000036815342

Date Mailed: 07/07/2009

NOTICE REGARDING CHANGE OF POWER OF ATTORNEY

This is in response to the Power of Attorney filed 06/05/2009.

- The withdrawal as attorney in this application has been accepted. Future correspondence will be mailed to the new address of record. 37 CFR 1.33.

/tswilliams/

Office of Data Management, Application Assistance Unit (571) 272-4000, or (571) 272-4200, or 1-888-786-0101

UNITED STATES PATENT AND TRADEMARK OFFICE

Commissioner for Patents
United States Patent and Trademark Office
P.O. Box 1450
Alexandria, VA 22313-1450
www.uspto.gov

LATHROP & GAGE LLP
4845 PEARL EAST CIRCLE
SUITE 201
BOULDER CO 80301

COPY MAILED

NOV 05 2009

OFFICE OF PETITIONS

In re Application of	:	
Victor Petrenko et al.	:	
Application No. 12/193,650	:	NOTICE
Filed: August 18, 2008	:	
Attorney Docket No. 483238	:	

This is a notice regarding your request filed September 9, 2009, for acceptance of a fee deficiency submission under 37 CFR 1.28.

The Office no longer investigates or rejects original or reissue applications under 37 CFR 1.56. **1098 Off. Gaz. Pat. Office 502 (January 3, 1989)**. Therefore, nothing in this Notice is intended to imply that an investigation was done.

Your fee deficiency submission under 37 CFR 1.28 is hereby **ACCEPTED**.

This application is no longer entitled to small entity status. Accordingly, all future fees paid in this application must be paid at the large entity rate.

Inquiries related to this communication should be directed to the undersigned at (571) 272-4584.

JoAnne Burke
Petitions Examiner
Office of Petitions

UNITED STATES PATENT AND TRADEMARK OFFICE

Commissioner for Patents
United States Patent and Trademark Office
P.O. Box 1450
Alexandria, VA 22313-1450
www.uspto.gov

HOLME ROBERTS & OWEN LLP
16427 N. SCOTTSDALE RD.
SUITE 300
SCOTTSDALE AZ 85254

COPY MAILED
MAR 01 2010

In re Application of	:	
SALEHI, Marjan	:	
Application No. 12/193,675	:	DECISION ON PETITION
Filed: August 18, 2008	:	TO WITHDRAW
Attorney Docket No. **53929-10001**	:	FROM RECORD
	:	

This is a decision on the Request to Withdraw as attorney or agent of record under 37 C.F.R. § 1.36(b), filed December 31, 2009.

The request is **APPROVED**.

A grantable request to withdraw as attorney/agent of record must be signed by every attorney/agent seeking to withdraw or contain a clear indication that one attorney is signing on behalf of another/others. The Office requires the practitioner(s) requesting withdrawal to certify that he, she, or they have: (1) given reasonable notice to the client, prior to the expiration of the response period, that the practitioner(s) intends to withdraw from employment; (2) delivered to the client or a duly authorized representative of the client all papers and property (including funds) to which the client is entitled; and (3) notified the client of any responses that may be due and the time frame within which the client must respond, pursuant 37 CFR 10.40(c).

The request was signed by Christine M. McAuliffe on behalf of all attorneys of record who are associated with customer No. 79362. All attorneys/agents associated have been withdrawn. Applicant is reminded that there is no attorney of record at this time.

All future correspondence will be directed to the first named inventor Marjan Salehi at the address indicated below.

There are no outstanding Office actions at this time.

Telephone inquiries concerning this decision should be directed to the undersigned at 571-272-4231.

Michelle R. Eason
Paralegal Specialist
Office of Petitions

cc: **MARJAN SALEHI**
7111 E. DOUBLETREE RANCH RD.
PARADISE VALLEY, AZ 85253

UNITED STATES PATENT AND TRADEMARK OFFICE

Commissioner for Patents
United States Patent and Trademark Office
P.O. Box 1450
Alexandria, VA 22313-1450
www.uspto.gov

SINORICA, LLC
2275 RESEARCH BLVD.
SUITE 500
ROCKVILLE, MD 20850

MAILED

MAR 25 2010

OFFICE OF PETITIONS

In re Application of	:	
Jun Zhang	:	
Application No. 12/193,804	:	ON PETITION
Filed: August 19, 2008	:	
Attorney Docket No. TW-CMA-0630	:	

This is a decision in response to the petition, filed December 30, 2009, under the provisions of 37 CFR 1.181 (no fee) to withdraw the holding of abandonment in the above-identified application.

The petition is **DISMISSED**.

Any request for reconsideration of this decision should be filed within two (2) months from the mail date of this decision. *Note* 37 CFR 1.181(f). The request for reconsideration should include a cover letter and be entitled as a "Renewed Petition under 37 CFR 1.181 to Withdraw the Holding of Abandonment."

The application became abandoned for failure to submit formal drawings in a timely manner in reply to the Notice of Allowability (Notice), mailed June 16, 2009, which set a period for reply of three (3) months. Accordingly, this application became abandoned on September 16, 2009. A Notice of Abandonment was mailed on October 19, 2009.

Petitioner argues that the abandonment should be withdrawn, since no further amendment was needed by applicant to an examiner's amendment. However, petitioner states that the drawing changes to Figure 7 were not approved by applicant and that sheets attached to the Notice "showed no drawing in red ink." It is acknowledged that since the drawing changes were transmitted electronically to applicant, there were no changes shown in red ink; however, the Notice of June 16, 2009 clearly gave applicant an opportunity to address any unacceptable changes made by the examiner prior to payment of the issue fee. Applicant simply failed to exercise such option. Further it is noted petitioner suggest that the original drawing of Figure 7 was changed by the USPTO to include drawing elements numbers 201, 20, 22, 223 and 21. The examiner's amendment of June 16, 2009 required a replacement drawing of Figure 7 to include drawing elements numbered 431, 43, 423, 422 and 41, not 201, 20, 22, 223 and 21, the original drawings elements of Figure 7 as filed August 18, 2008. Corrected drawing Figure 7 has been provided with the present petition, but it is not properly labeled as a replacement drawing.

The action of the U.S. Patent and Trademark Office is based exclusively on the written record in the Office. Since no replacement drawing was filed in response to the Notice of Allowability of

June 16, 2009, the application was properly held abandoned by operation of law. Consequently, the abandonment will not be withdrawn.

Petitioner is strongly encouraged to consider filing a petition under 37 CFR 1.137(b) to revive an unintentionally abandoned application instead of filing a renewed petition under 37 CFR 1.181 or a petition under 37 CFR 1.137(a).

Public Law 97-247, § 3, 96 Stat. 317 (1982), which revised patent and trademark fees, amended 35 U.S.C. § 41(a)(7) to provide for the revival of an "unintentionally" abandoned application without a showing that the delay in prosecution or in late payment of the issue fee was "unavoidable." This amendment to 35 U.S.C. § 41(a)(7) has been implemented in 37 CFR 1.137(b). An "unintentional" petition under 37 CFR 1.137(b) must be accompanied by the $810 petition fee.

The filing of a petition under 37 CFR 1.137(b) cannot be intentionally delayed and therefore must be filed promptly. A person seeking revival due to unintentional delay cannot make a statement that the delay was unintentional unless the entire delay, including the date it was discovered that the application was abandoned until the filing of the petition to revive under 37 CFR 1.137(b), was unintentional. A statement that the delay was unintentional is not appropriate if petitioner intentionally delayed the filing of a petition for revival under 37 CFR 1.137(b).

Any request for reconsideration of this decision must be submitted within **TWO (2) MONTHS** from the mail date of this decision. Extensions of time under 37 CFR 1.136(a) are permitted. The reconsideration request should include a cover letter entitled "Renewed Petition under 37 CFR 1.137(b)." This is **not** a final agency action within the meaning of 5 U.S.C. § 704.

Further correspondence with respect to this matter should be delivered through one of the following mediums:

By mail: Mail Stop PETITIONS
Commissioner for Patents
Post Office Box 1450
Alexandria, VA 22313-1450

By hand: Customer Service Window
Mail Stop Petitions
Randolph Building
401 Dulany Street
Alexandria, VA 22314

By fax: (571) 273-8300
ATTN: Office of Petitions

By Internet: EFS-Web[1]

[1] www.uspto.gov/ebc/efs_help.html (for help using EFS-Web call the Patent Electronic Business Center at (866) 217-9197)

Any questions concerning this matter may be directed to the undersigned at (571) 272-3204.

Sherry D. Brinkley
Petitions Examiner
Office of Petitions

UNITED STATES PATENT AND TRADEMARK OFFICE

Commissioner for Patents
United States Patent and Trademark Office
P.O. Box 1450
Alexandria, VA 22313-1450
www.uspto.gov

SINORICA, LLC
2275 RESEARCH BLVD.
SUITE 500
ROCKVILLE, MD 20850

MAILED

JUN 10 2010

OFFICE OF PETITIONS

In re Application of
Jun Zhang
Application No. 12/193,804
Filed: August 19, 2008
Attorney Docket No.: TW-CMA-0630

ON PETITION

This is a decision on the petition, filed April 9, 2010, to revive the above-identified application under the provisions of 37 CFR 1.137(b).

The petition is **GRANTED**.

This application became abandoned for failure to submit corrected formal drawing(s) on or before September 16, 2009 as required by the Notice of Allowability mailed June 16, 2009. A Notice of Abandonment was mailed on October 19, 2009.

The petition satisfies the requirements of 37 CFR 1.137(b) in that petitioner has supplied (1) the reply in the form of corrected formal drawing(s), (2) the petition fee of $810; and (3) an adequate statement of unintentional delay.

The application is being referred to the Office of Publications to oversee the review of the drawing filed April 9, 2010 and for processing into a patent.

Telephone inquires related to this decision may be directed to the undersigned at (571) 272-3204. Status inquires related to processing at Publishing Division should be directed to (571) 272-4200.

Sherry D. Brinkley
Petitions Examiner
Office of Petitions

UNITED STATES PATENT AND TRADEMARK OFFICE

UNITED STATES DEPARTMENT OF COMMERCE
United States Patent and Trademark Office
Address: COMMISSIONER FOR PATENTS
P.O. Box 1450
Alexandria, Virginia 22313-1450
www.uspto.gov

APPLICATION NO.	FILING DATE	FIRST NAMED INVENTOR	ATTORNEY DOCKET NO.	CONFIRMATION NO.
12/193,945	08/19/2008	Shin-Chan KANG	SEC.1240C	5759

20987 7590 03/18/2009
VOLENTINE & WHITT PLLC
ONE FREEDOM SQUARE
11951 FREEDOM DRIVE SUITE 1260
RESTON, VA 20190

EXAMINER

ART UNIT	PAPER NUMBER
2113	

MAIL DATE	DELIVERY MODE
03/18/2009	PAPER

Please find below and/or attached an Office communication concerning this application or proceeding.

The time period for reply, if any, is set in the attached communication.

UNITED STATES PATENT AND TRADEMARK OFFICE

Commissioner for Patents
United States Patent and Trademark Office
P.O. Box 1450
Alexandria, VA 22313-1450
www.uspto.gov

VOLENTINE & WHITT PLLC
ONE FREEDOM SQUARE
11951 FREEDOM DRIVE SUITE 1260
RESTON VA 20190

In re Application of: KANG et al.
Application No. 12/193,945
Filed: August 19, 2008
For: **SEMICONDUCTOR IC INCORPORATING A CO-DEBUGGING FUNCTION AND TEST SYSTEM**

DECISION ON REQUEST TO PARTICIPATE IN PATENT PROSECUTION HIGHWAY PILOT PROGRAM AND PETITION TO MAKE SPECIAL UNDER 37 CFR 1.102(d)

This is a decision on the request to participate in the Patent Prosecution Highway (PPH) program and the petition under 37 CFR 1.102(d), filed January 14, 2009, to make the above- identified application special.

The request and petition are **GRANTED**.

A grantable request to participate in the PPH program and petition to make special require:

1. The U.S. application must validly claim priority under 35 U.S.C. 119(a) to one or more applications filed in the KIPO, note where the KIPO application with similar claims is not the same application from which the U.S. application claims priority that the applicant must identify the relationship between the KIPO application with similar claims and the KIPO priority application;

2. Applicant must submit a copy of:
   a. The allowable/patentable claim(s) from the KIPO application(s) or if a copy of the allowable/patentable claims is available via the Dossier Access System (DAS) applicant may request the USPTO obtain a copy from the DAS, however if the USPTO is unable to obtain a copy from the DAS the applicant will be required to submit a copy;
   b. An English translation of the allowable/patentable claim(s) and
   c. A statement that the English translation is accurate;

3. Applicant must
   a. Ensure all the claims in the U.S. application must sufficiently correspond or be amended to sufficiently correspond to the allowable/patentable claim(s) in the KIPO application(s) and
   b. Submit a claims correspondence table in English;

4. Examination of the U.S. application has not begun;

5. Applicant must submit:
   a. Documentation of prior office action:
      i. a copy of the office action(s)just prior to the "Decision to Grant a Patent" from each of the KIPO application(s) containing the allowable/patentable claim(s) or
      ii. if the allowable/patentable claims(s) are from a "Notification of Reasons for Refusal" then the Notification of Reasons for Refusal or
      iii. if the KIPO application is a first action allowance then no office action from the KIPO is necessary should be indicated on the request/petition form; Further, if a copy of the documents from a or b above is available via the Dossier Access System (DAS) applicant may request the USPTO obtain a copy from the DAS, however if the USPTO is unable to obtain a copy from the DAS the applicant will be required to submit a copy;

   b. An English language translation of the KIPO Office action from (5)(a)(i)-(ii) above;
   c. A statement that the English translation is accurate;

6. Applicant must submit:
   a. An IDS listing the documents cited by the KIPO examiner in the KIPO office action (unless already submitted in this application)
   b. Copies of the documents except U.S. patents or U.S. patent application publications (unless already submitted in this application);

7. The required petition fee under 37 CFR 1.17(h).

The request to participate in the PPH program and petition comply with the above requirements, and accordingly, the above-identified application has been accorded "special" status.

The request and petition are **GRANTED**.

Telephone inquiries concerning this decision should be directed to Mano Padmanabhan at 571-272-4210.

All other inquiries concerning the examination or status of the application is accessible in the PAIR system at http://www.uspto.gov/ebc/index.html.

The application is being forwarded to the examiner for action on the merits commensurate with this decision.

/Mano Padmanabhan/

Mano Padmanabhan
Quality Assurance Specialist,
Technology Center 2100, Workgroup 2180
571-272-4210

UNITED STATES PATENT AND TRADEMARK OFFICE

UNITED STATES DEPARTMENT OF COMMERCE
United States Patent and Trademark Office
Address: COMMISSIONER FOR PATENTS
P.O. Box 1450
Alexandria, Virginia 22313-1450
www.uspto.gov

APPLICATION NO.	FILING DATE	FIRST NAMED INVENTOR	ATTORNEY DOCKET NO.	CONFIRMATION NO.
12/193,962	08/19/2008	Kenneth Scea	POU920070370US2	5790

77062 7590 09/29/2008
The Law Firm of Andrea Hence Evans, LLC
14625 Baltimore Ave., #853
Laurel, MD 20707

EXAMINER
LE, THANH TAM T

ART UNIT	PAPER NUMBER
2839	

MAIL DATE	DELIVERY MODE
09/29/2008	PAPER

Please find below and/or attached an Office communication concerning this application or proceeding.

The time period for reply, if any, is set in the attached communication.

UNITED STATES PATENT AND TRADEMARK OFFICE

Commissioner for Patents
United States Patent and Trademark Office
P.O. Box 1450
Alexandria, VA 22313-1450
www.uspto.gov

The Law Firm of Andrea Hence Evans, LLC
14625 Baltimore Ave., #853
Laurel, MD 20707

In re Application of:
Kenneth Scea et al.
Serial No.: 12/193,962
Filed: August 19, 2008
Docket No.: POU920070370US2
Title: EMC CLAMP FOR THREE EXIT BACKSHELL

DECISION ON PETITION TO MAKE SPECIAL FOR NEW APPLICATION UNDER 37 C.F.R. § 1.102 & M.P.E.P. § 708.02

This is a decision on the petition filed on August 19, 2008 and supplemented on September 11, 2008 to make the above-identified application special for accelerated examination procedure under 37 C.F.R. §1.102.

The petition to make the application special is **GRANTED**.

The application is eligible for accelerated examination and the petition complies with the conditions for granting the application special status pursuant to the "Change to Practice for Petitions in Patent Applications to Make Special and for Accelerated Examination" published June 26, 2006, in the Federal Register. (71 Fed. Reg. 36323).

The prosecution of the instant application will be conducted expeditiously according to the following guidelines.

1. The application will be docketed to an examiner and taken up for action within two weeks of the date of this decision.

2. Restriction Practice:
   If the examiner determines that the claims are not directed to a single invention, a telephone request to elect one single invention will be made pursuant to MPEP 812.01. As a prerequisite to the grant of this petition, the applicant has agreed to make an oral election, by telephone, without traverse. If the applicant refuses to make an election without traverse, or the examiner cannot reach the applicant after a reasonable effort, the examiner will treat the first claimed invention (invention defined by claim 1) as having being constructively elected without traverse for examination.

3. Office action:
   If it is determined that, after appropriate consultation, there is a potential rejection or any other issue to be addressed, the examiner will telephone the applicant and arrange an interview to discuss and resolve the issue. An Office action, other than a Notice of

Allowance and Fee(s) Due (Notice of Allowance), will not be issued unless either: 1) an interview was conducted but did not result in agreed to action that places the application in condition for allowance, or, 2) a determination is made that an interview would be unlikely to result in the application being placed in condition for allowance, and 3) an internal conference has been held to review any rejection of any claim.

4. Time for Reply:
An Office action other than a Notice of Allowance or a final Office action will set a shortened statutory period of one month or thirty days, whichever is longer, for reply with no extension of time available under 37 C.F.R. §1.136(a). Failure to timely file a reply within this non-extendible period for reply will result in the abandonment of the application.

5. Reply by Applicant:
A timely reply to an Office action other than the Notice of Allowance must be submitted electronically via EFS or EFS-web and limited to addressing the rejections, objections and requirement made. Any amendment that attempts to: 1) add claims which would result in more than three pending independent claims or more than twenty pending total claims; 2) present claims not encompassed by the pre-examination search or an updated accelerated examination support document; or 3) present claims that are directed a non-elected invention or an invention other than that previously claimed and examined in the application, will be treated as not fully responsive and will not be entered.

   For any amendment to the claims (including any new claim) that is not encompassed by the accelerated examination support document, applicant must provide an updated accelerated examination support document that encompasses the amended or new claims at the time of filing of the amendment.

   To proceed expeditiously with the examination, it is recommended that a reply with amendments made to any claim or with any new claim being added be accompanied by an updated accelerated examination support document or a statement explaining how the amended or new claim is supported by the original accelerated examination support document.

6. Information Disclosure Statement (IDS):
Any IDS filed during prosecution must be submitted electronically via EFS or EFS-web, accompanied by an updated accelerated examination support document, and be in compliance with 37 C.F.R. §1.97 and §1.98.

7. Post-Allowance Processing:
To expedite processing of the allowed application into a patent, the applicant must: 1) pay the required fees within one month of the date of the Notice of Allowance, and 2) not file any post allowance papers not required by the Office. In no event may the issue fee be paid and accepted later than three months from the date of the Notice of Allowance.

8. After-Final and Appeal Procedures:
   To expedite prosecution, after receiving the final Office action, applicant must: 1) promptly file a notice of appeal, an appeal brief and appeal fees; and 2) not request a pre-appeal brief conference.

   Any amendment, affidavit or other evidence filed after final Office action must comply with applicable rules and the requirements outlined in numbered paragraphs 5 and 6 above.

   On appeal, the application will proceed according to normal appeal procedures. After appeal, the application will again be treated special.

9. Proceedings Outside the Normal Examination Process:
   If the application becomes involved in a proceeding that is outside the normal examination process (e.g., a secrecy order, national security review, interference proceeding, petitions under 37 C.F.R. §1.181, §1.182 or §1.183), the application will be treated special before and after such proceeding.

10. Final Disposition:
    The twelve-month goal of this accelerated examination procedure ends with a final disposition. The mailing of a final Office action, a Notice of Allowance, the filing of a Notice of Appeal, or the filing of a Request for Continued Examination (RCE) is the final disposition.

If, during prosecution, a paper is not filed electronically using EFS-web, a reply is filed but is not fully responsive, the application is involved in an appeal, or a proceeding outside normal examination process, the application will still be examined expeditiously, however, the final disposition may occur more than twelve months from the filing of the application.

Any inquiry regarding this decision should be directed to the undersigned at (571) 272-1606.

Hien H. Phan, Quality Assurance Specialist
Technology Center 2800 - Semiconductors,
Electrical & Optical Systems & Components

HP/JC

UNITED STATES PATENT AND TRADEMARK OFFICE

Commissioner for Patents
United States Patent and Trademark Office
P.O. Box 1450
Alexandria, VA 22313-1450
www.uspto.gov

BRINKS HOFER GILSON & LIONE
P.O. BOX 10395
CHICAGO, IL 60610

COPY MAILED

DEC 3 1 2009

OFFICE OF PETITIONS

In re Application of
Alexander Lisheng HUANG
Application No. 12/193,997
Filed: August 19, 2008
Attorney Docket No. **8285/977**

DECISION ON PETITION TO WITHDRAW FROM RECORD

This is a decision on the Request to Withdraw as attorney or agent of record under 37 C.F.R. § 1.36(b), filed October 13, 2009.

The request is **APPROVED**.

A grantable request to withdraw as attorney/agent of record must be signed by every attorney/agent seeking to withdraw or contain a clear indication that one attorney is signing on behalf of another/others.

The request was signed by Scott W. Brim on behalf of all attorneys of record. All attorneys/agents associated have been withdrawn. Applicant is reminded that there is no attorney of record at this time.

All future communications from the Office will be directed to the assignee of the entire interest at the address below until otherwise properly notified by the applicant.

Telephone inquiries concerning this decision should be directed to the undersigned at 571-272-7253.

/Monica A. Graves/
Petitions Examiner, Office of Petitions

cc: **SBC TECHNOLOGY RESOURCES, INC.**
ONE AT&T WAY
BEDMINISTER, NJ 07921

UNITED STATES PATENT AND TRADEMARK OFFICE

Commissioner for Patents
United States Patent and Trademark Office
P.O. Box 1450
Alexandria, VA 22313-1450
www.uspto.gov

MAILED

SEP 01 2009

OFFICE OF PETITIONS

Finnegan, Henderson, Farabow, Garrett & Dunner, LLP
901 New York Avenue, NW
Washington, DC 20001-4413

In re Application of	:	
Xiaoqian Zhang et al.	:	
Application No. 12/194,060	:	DECISION ON PETITION
Filed: August 19, 2008	:	TO WITHDRAW
Attorney Docket No. 9145.0061-00	:	FROM RECORD
	:	

This is a decision on the Request to Withdraw as attorney or agent of record under 37 C.F.R. § 1.36(b), filed July 17, 2009.

The request is **NOT APPROVED.**

A grantable request to withdraw as attorney/agent of record must be signed by every attorney/agent seeking to withdraw or contain a clear indication that one attorney is signing on behalf of another/others. The Office requires the practitioner(s) requesting withdrawal to certify that he, she, or they have: (1) given reasonable notice to the client, prior to the expiration of the response period, that the practitioner(s) intends to withdraw from employment; (2) delivered to the client or a duly authorized representative of the client all papers and property (including funds) to which the client is entitled; and (3) notified the client of any responses that may be due and the time frame within which the client must respond, pursuant 37 CFR 10.40(c).

The request cannot be approved because there is no indication that the acts noted in the above-identified certifications have been performed. Refer to Form No. PTO/SB/83 (Updated 4/2008).

All future communications from the Office will continue to be directed to the above-listed address until otherwise notified by applicant.

Telephone inquiries concerning this decision should be directed to the undersigned at 571-272-6735.

/Kimberly A. Inabinet/

Kimberly Inabinet
Petitions Examiner
Office of Petitions

cc: Haynes and Boone, LLP
IP Section
2323 Victory Avenue
Suite 700
Dallas, TX 75219

UNITED STATES PATENT AND TRADEMARK OFFICE

COMMISSIONER FOR PATENTS
UNITED STATES PATENT AND TRADEMARK OFFICE
P.O. BOX 1450
ALEXANDRIA, VA 22313-1450
www.uspto.gov
DIW 8-sep-09

NIXON & VANDERHYE, PC
901 NORTH GLEBE ROAD, 11TH FLOOR
ARLINGTON VA 22203

MAILED

SEP 22 2009

OFFICE OF PETITIONS

In re Application of O'Connor et al. Application Number: 12/194067 Filing Date: 08/19/2008 Attorney Docket Number: JHN-10-1718	DECISION DISMISSING PETITION

This is a decision in response to the "PETITION TO WITHDRAW HOLDING OF ABANDONMENT BASED ON FILING OF RESPONSE TO NOTICE TO FILE MISSING PARTS," filed on July 22, 2009.

The petition is **DISMISSED**.

The application became abandoned on October 30, 2008, for failure to file a timely reply to the Notice to File Missing Parts of Nonprovisional Application mailed on August 29, 2008, which set a two (2)-month shortened statutory period for reply. On November 25, 2008, an executed oath or declaration was received, along with a surcharge, but no extension of time was received or authorized. Notice of Abandonment was mailed on July 16, 2009.

Petitioners assert that a response was timely filed on November 25, 2008.

A review of the record reveals that applicants' response was filed on November 25, 2008, but the response was untimely. Specifically, the response filed on November 25, 2008 required a one (1)-month extension of time in order to be a timely reply to the Notice to File Missing Parts of Nonprovisional Application mailed on August 29, 2008, which set a two (2)-month shortened statutory period for reply. No extension of time fee was paid, however. Moreover, although the N417 Electronic Acknowledgement Receipt filed with the declaration authorized payment of additional fees due under 37 CFR 1.121, no authorization for payment of fees under 37 CFR 1.17 or other general authorization to charge the required fees, including extension of time fees, was filed. Accordingly, the application became abandoned as a

matter of law on October 30, 2008, in the absence of timely payment of the required one (1)-month extension of time fee.

37 CFR 1.135(b) states, in pertinent part:

> (b) Prosecution of an application to save it from abandonment pursuant to paragraph (a) of this section must include such complete and proper reply as the condition of the application may require.

Accordingly, the application was properly held abandoned for failure to file a timely response to the Notice to File Missing Parts of Nonprovisional Application mailed on August 29, 2008.

Petitioner may wish to consider filing a petition to revive under 37 CFR 1.137(b).

A reply should be submitted within two (2) months of the mailing date of this decision. **This time period is not extendable.** See 37 CFR 1.181(f).

Further correspondence with respect to this matter should be addressed as follows:

By mail: Mail Stop Petition
Commissioner for Patents
P.O. Box 1450
Alexandria, VA 22313-1450

By FAX: (571) 273-8300
Attn: Office of Petitions

By hand: Customer Service Window
Mail Stop Petition
Randolph Building
401 Dulany Street
Alexandria, VA 22314

Telephone inquiries concerning this matter may be directed to the undersigned at (571) 272-3231.

D Wood

Douglas I. Wood
Senior Petitions Attorney
Office of Petitions

UNITED STATES PATENT AND TRADEMARK OFFICE

Commissioner for Patents
United States Patent and Trademark Office
P.O. Box 1450
Alexandria, VA 22313-1450
www.uspto.gov

NIXON & VANDERHYE, PC
901 NORTH GLEBE ROAD, 11TH FLOOR
ARLINGTON VA 22203

COPY MAILED

DEC 2 2 2009

OFFICE OF PETITIONS

In re Application of	:	
Bernard O'Connor, et al.	:	
Application No. 12/194,067	:	DECISION ON PETITION
Filed: August 19, 2008	:	
Attorney Docket No. JHN-10-1718	:	

This is a decision on the petition under the unintentional provisions of 37 CFR 1.137(b), filed October 28, 2009, to revive the above-identified application.

The petition is **GRANTED**.

The application became abandoned for failure to reply in a timely manner to the Notice to File Missing Parts of Nonprovisional Application (Notice), mailed August 29, 2008. The Notice set a period for reply of two (2) months from the mail date of the Notice. No extensions of time under the provisions of 37 CFR 1.136(a) was obtained. Accordingly, the application became abandoned on October 30, 2008. The Notice of Abandonment was mailed July 16, 2009.

The petition satisfies the requirements of 37 CFR 1.137(b) in that petitioner has supplied (1) the reply in the form of an oath and surcharge, (2) the petition fee of $1,620, and (3) a proper statement of unintentional delay.

37 CFR 1.137(b)(3) requires a statement that "the entire delay in filing the required reply from the due date for the reply until the filing of a grantable petition pursuant to 37 CFR 1.137(b) was unintentional." Since the statement appearing in the petition varies from the language required by 37 CFR 1.137(b)(3), the statement is being construed as the required statement. Petitioner must notify the Office if this is not a correct reading of the statement appearing in the petition.

Telephone inquiries concerning this decision should be directed to Terri Johnson at (571) 272-2991.

This application is being referred to the Office of Patent Application Processing for appropriate action on the reply received.

Terri Johnson
Petitions Examiner
Office of Petitions

UNITED STATES PATENT AND TRADEMARK OFFICE

Commissioner for Patents
United States Patent and Trademark Office
P.O. Box 1450
Alexandria, VA 22313-1450
www.uspto.gov

MAILED

SEP 01 2009

OFFICE OF PETITIONS

Finnegan, Henderson, Farabow, Garrett & Dunner, LLP
901 New York Avenue, NW
Washington, DC 20001-4413

In re Application of	:	
Zhiyong Guan et al.	:	
Application No. 12/194,080	:	DECISION ON PETITION
Filed: August 19, 2008	:	TO WITHDRAW
Attorney Docket No. 9145.0063-00	:	FROM RECORD
	:	

This is a decision on the Request to Withdraw as attorney or agent of record under 37 C.F.R. § 1.36(b), filed July 17, 2009.

The request is **NOT APPROVED.**

A grantable request to withdraw as attorney/agent of record must be signed by every attorney/agent seeking to withdraw or contain a clear indication that one attorney is signing on behalf of another/others. The Office requires the practitioner(s) requesting withdrawal to certify that he, she, or they have: (1) given reasonable notice to the client, prior to the expiration of the response period, that the practitioner(s) intends to withdraw from employment; (2) delivered to the client or a duly authorized representative of the client all papers and property (including funds) to which the client is entitled; and (3) notified the client of any responses that may be due and the time frame within which the client must respond, pursuant 37 CFR 10.40(c).

The request cannot be approved because there is no indication that the acts noted in the above-identified certifications have been performed. Refer to Form No. PTO/SB/83 (Updated 4/2008).

All future communications from the Office will continue to be directed to the above-listed address until otherwise notified by applicant.

Telephone inquiries concerning this decision should be directed to the undersigned at 571-272-6735.

/Kimberly A. Inabinet/

Kimberly Inabinet
Petitions Examiner
Office of Petitions

cc: Haynes and Boone, LLP
IP Section
2323 Victory Avenue
Suite 700
Dallas, TX 75219

UNITED STATES PATENT AND TRADEMARK OFFICE

UNITED STATES DEPARTMENT OF COMMERCE
United States Patent and Trademark Office
Address: COMMISSIONER FOR PATENTS
P.O. Box 1450
Alexandria, Virginia 22313-1450
www.uspto.gov

APPLICATION NO.	FILING DATE	FIRST NAMED INVENTOR	ATTORNEY DOCKET NO.	CONFIRMATION NO.
12/194,128	08/19/2008	Shinji NAKAGAWA	056203.60686US	6075

23911 7590 06/04/2010
CROWELL & MORING LLP
INTELLECTUAL PROPERTY GROUP
P.O. BOX 14300
WASHINGTON, DC 20044-4300

EXAMINER
WOLFE JR, WILLIS RAY

ART UNIT	PAPER NUMBER
3747	

MAIL DATE	DELIVERY MODE
06/04/2010	PAPER

Please find below and/or attached an Office communication concerning this application or proceeding.

The time period for reply, if any, is set in the attached communication.

UNITED STATES PATENT AND TRADEMARK OFFICE

Commissioner for Patents
United States Patent and Trademark Office
P.O. Box 1450
Alexandria, VA 22313-1450
www.uspto.gov

CROWELL & MORING LLP
INTELLECTUAL PROPERTY GROUP
P.O. BOX 14300
WASHINGTON DC 20044-4300

In re Application of	:	
NAKAGAWA, SHINJI et al	:	DECISION ON REQUEST TO
Application No. 12/194,128	:	PARTICIPATE IN PATENT
Filed: Aug. 19, 2008	:	PROSECUTION HIGHWAY
Attorney Docket No. 056203.60686US	:	PROGRAM AND PETITION
For: ENGINE CONTROL APPARATUS	:	37 CFR 1.102(d)

This is a decision on the request to participate in the Patent Prosecution Highway (PPH) program and the petition under 37 CFR 1.102(d), filed June 3, 2010 to make the above-identified application special.

The request and petition are **GRANTED**.

A grantable request to participate in the PPH pilot program and petition to make special require:

(1) The U.S. application must validly claim priority under 35 U.S.C. 119(a) to one or more applications filed in the JPO;
(2) Applicant must submit a copy of the allowable/patentable claim(s) from the JPO application(s) along with an English translation thereof and a statement that the English translation is accurate;
(3) All the claims in the U.S. application must sufficiently correspond or be amended to sufficiently correspond to the allowable/patentable claim(s) in the JPO application(s);
(4) Examination of the U.S. application has not begun;
(5) Applicant must submit a copy of all the office actions from each of the JPO application(s) containing the allowable/patentable claim(s) along with an English translation thereof and a statement that the English translation is accurate and;
(6) Applicant must submit an IDS listing the documents cited by the JPO examiner in the JPO office action along with copies of documents except U.S. patents or U.S. patent application publications.

In light of the petition being properly submitted, the request to participate in the PPH program and the petition comply with the above requirements. Accordingly, the above-identified application has been accorded "special" status.

The applicant is encouraged to cite and submit all relevant prior art references, if any, to facilitate examination in this application.

Telephone inquiries concerning this decision should be directed to Henry C. Yuen at 571-272-4856. All other inquiries concerning the examination or status of the application should be directed to Steve Cronin, the SPE of Art Unit 3747, and 571-272-4536 for Class 701/103 and also accessible in the PAIR system at http://www.uspto.gov/ebc.index.html.

Petition is **granted**.

/Henry C. Yuen/

Henry C. Yuen, Special Programs Examiner
Technology Center 3700 – Mechanical Engineering,
Manufacturing and Products
571-272-4856

UNITED STATES PATENT AND TRADEMARK OFFICE

UNITED STATES DEPARTMENT OF COMMERCE
United States Patent and Trademark Office
Address: COMMISSIONER FOR PATENTS
P.O. Box 1450
Alexandria, Virginia 22313-1450
www.uspto.gov

APPLICATION NO.	FILING DATE	FIRST NAMED INVENTOR	ATTORNEY DOCKET NO.	CONFIRMATION NO.
12/194,134	08/19/2008	Jason Loomis Posselt	54887	6082

28241 7590 02/20/2010
THE LAW OFFICES OF CALVIN B. WARD
18 CROW CANYON COURT, SUITE 305
SAN RAMON, CA 94583

EXAMINER

ART UNIT	PAPER NUMBER
2875	

MAIL DATE	DELIVERY MODE
02/20/2010	PAPER

Please find below and/or attached an Office communication concerning this application or proceeding.

The time period for reply, if any, is set in the attached communication.

UNITED STATES PATENT AND TRADEMARK OFFICE

Commissioner for Patents
United States Patent and Trademark Office
P.O. Box 1450
Alexandria, VA 22313-1450
www.uspto.gov

THE LAW OFFICES OF CALVIN B. WARD
18 CROW CANYON COURT, SUITE 305
SAN RAMON CA 94583

In re Application of	:	
POSSELT et al.	:	DECISION ON PETITION
Application No. 12/194,134	:	TO MAKE SPECIAL UNDER
Filed: 19 August 2008	:	THE GREEN TECHNOLOGY
Attorney Docket No. 54887	:	PILOT PROGRAM

This is a decision on the petition under 37 CFR 1.102, filed 20 January 2010, to make the above-identified application special under the pilot program for applications pertaining to Green Technologies as set forth 74 Federal Register Notice 64666 (December 8, 2009).

The petition is **DISMISSED**.

If reconsideration of this decision is desired, a petition for reconsideration must be filed within ONE (1) MONTH OR THIRTY (30) DAYS from the mail date of this decision, whichever is longer. No extension of this time limit can be granted under 37 CFR 1.136(a) or (b). The petition for reconsideration should include an exhaustive attempt to provide the lacking item(s) noted below, since, after a decision on the petition for reconsideration, no further reconsideration or review of the matter will be undertaken by the Director.

A grantable petition to make an application special under 37 CFR 1.102 and the pilot program as set forth in 74 FR 64666 must be directed to a nonprovisional application filed under 35 USC 111(a) or be a national stage entry under 35 USC 371, exclusive of any reissue applications and be filed prior to the date of the notice, December 8, 2009.

In order to qualify for special status, the following requirements must be met. 1) The application must be classified in one of the eligible US classifications listed in section VI of the notice. 2) The application must have no more than 3 independent claims and no more than 20 total claims. 3) The application must not contain any multiple dependent claims. 4) The petition must state the basis for seeking special status, i.e., the claimed invention either: A) materially enhances the quality of the environment or B) materially contributes to: i) the discovery or development of renewable energy resources, ii) the more efficient utilization and conservation of energy resources, or iii) greenhouse gas emission reduction. 5) If the disclosure is not clear on its face that the claimed invention materially contributes under category (A) or (B), the petition must be accompanied by a statement by the applicant, assignee, or an attorney/agent registered to practice before the Office explaining how the materiality standard is met. 6) A statement that applicant will agree to make an election without traverse in a telephonic interview if a restriction requirement is made by the examiner. 7) The petition to make special must be filed

electronically. 8) The petition must be filed at least one day prior to the date that a first Office Action appears in the Patent Application Information Retrieval (PAIR) system. 9) The petition must be accompanied by a request for early publication in compliance with 37 CFR 1.219 and include the publication fee as set forth in 37 CFR 1.18(d).

The requirement for a fee for consideration of the petition to make special for applications pertaining to Green Technologies has been waived.

The petition lacks item 1 and above.

In regard to item 1, petitioner should note that this application has been classified in an area (USPC 362/249.02) that is not one of the eligible US classifications listed in section VI of the notice. Therefore, this application is not eligible for the Pilot Program. The classification limitations are purposefully made to be narrow for the Pilot Program; however, these may be expanded based upon the success of the Pilot Program. Petitioner may file a preliminary amendment that would cause this application to be classified elsewhere. However, while petitioner may suggest a classification (see, e.g., MPEP 708.02(a)(VII)(C)), the application will be assigned to the most appropriate classification based upon current U.S. classification guidelines. Furthermore, a petition for the Pilot Program should not be filed until and unless all of the requirements set forth in the Notice are met; i.e., a petition should not be filed for an application that is currently classified outside the eligible classifications set forth in the Notice.

Any reconsideration of this decision should be submitted through the USPTO electronic filing system, EFS-Web, and selecting the document description of "Petition for Green Tech Pilot" on the EFS-Web screen.

Telephone inquires concerning this decision should be directed to Lee W. Young at 571-272-4549.

The application is being forwarded to the Technology Center Art Unit 2875 for action on the merits commensurate with this decision.

Lee W. Young
Quality Assurance Specialist
Technology Center 2800

UNITED STATES PATENT AND TRADEMARK OFFICE

UNITED STATES DEPARTMENT OF COMMERCE
United States Patent and Trademark Office
Address: COMMISSIONER FOR PATENTS
P.O. Box 1450
Alexandria, Virginia 22313-1450
www.uspto.gov

APPLICATION NO.	FILING DATE	FIRST NAMED INVENTOR	ATTORNEY DOCKET NO.	CONFIRMATION NO.
12/194,134	08/19/2008	Jason Loomis Posselt	54887	6082

28241 7590 06/09/2010
THE LAW OFFICES OF CALVIN B. WARD
18 CROW CANYON COURT, SUITE 305
SAN RAMON, CA 94583

EXAMINER
ZETTL, MARY E

ART UNIT	PAPER NUMBER
2875	

MAIL DATE	DELIVERY MODE
06/09/2010	PAPER

Please find below and/or attached an Office communication concerning this application or proceeding.

The time period for reply, if any, is set in the attached communication.

UNITED STATES PATENT AND TRADEMARK OFFICE

Commissioner for Patents
United States Patent and Trademark Office
P.O. Box 1450
Alexandria, VA 22313-1450
www.uspto.gov

THE LAW OFFICES OF CALVIN B. WARD
18 CROW CANYON COURT, SUITE 305
SAN RAMON CA 94583

In re Application of	:	
POSSELT et al.	:	DECISION ON PETITION
Application No. 12/194,134	:	TO MAKE SPECIAL UNDER
Filed: 19 August 2008	:	THE GREEN TECHNOLOGY
Attorney Docket No. 54887	:	PILOT PROGRAM

This is a decision on the petition under 37 CFR 1.102, filed 20 January 2010 and renewed on 27 May 2010, to make the above-identified application special under the pilot program for applications pertaining to Green Technologies as set forth 74 Federal Register Notice 64666 (December 8, 2009).

The petition is **GRANTED**.

A grantable petition to make an application special under 37 CFR 1.102 and the pilot program as set forth in 74 FR 64666 must be directed to a nonprovisional application filed under 35 USC 111(a) or be a national stage entry under 35 USC 371, exclusive of any reissue applications and be filed prior to the date of the notice, December 8, 2009.

In order to qualify for special status, the following requirements must be met. 1) The application must have no more than 3 independent claims and no more than 20 total claims. 2) The application must not contain any multiple dependent claims. 3) The petition must state the basis for seeking special status, i.e., the claimed invention either: A) materially enhances the quality of the environment or B) materially contributes to: i) the discovery or development of renewable energy resources, ii) the more efficient utilization and conservation of energy resources, or iii) greenhouse gas emission reduction. 4) If the disclosure is not clear on its face that the claimed invention materially contributes under category (A) or (B), the petition must be accompanied by a statement by the applicant, assignee, or an attorney/agent registered to practice before the Office explaining how the materiality standard is met. 5) A statement that applicant will agree to make an election without traverse in a telephonic interview if a restriction requirement is made by the examiner. 6) The petition to make special must be filed electronically. 7) The petition must be filed at least one day prior to the date that a first Office Action appears in the Patent Application Information Retrieval (PAIR) system. 8) The petition must be accompanied by a request for early publication in compliance with 37 CFR 1.219 and include the publication fee as set forth in 37 CFR 1.18(d).

The requirement for a fee for consideration of the petition to make special for applications pertaining to Green Technologies has been waived.

The instant petition complies with items 1 – 9 above. Accordingly, the above-identified application has been accorded "special" status.

Telephone inquires concerning this decision should be directed to Lee W. Young at 571-272-4549.

The application is being forwarded to the Technology Center Art Unit 2875 for action on the merits commensurate with this decision.

Lee W. Young
Quality Assurance Specialist
Technology Center 2800

UNITED STATES PATENT AND TRADEMARK OFFICE

Commissioner for Patents
United States Patent and Trademark Office
P.O. Box 1450
Alexandria, VA 22313-1450
www.uspto.gov

MINTZ LEVIN COHN FERRIS
GLOVSKY AND POPEO, P.C.
ONE FINALCIAL CENTER
BOSTON, MA 02111

MAILED

OCT 19 2009

OFFICE OF PETITIONS

In re Application of	:	
Payam Lavi	:	
Application No. 12/194,184	:	DECISION ON PETITION
Filed: August 19, 2008	:	TO WITHDRAW
Attorney Docket No. 35057-002002US	:	FROM RECORD
	:	

This is a decision on the Request to Withdraw as attorney or agent of record under 37 C.F.R. § 1.36(b), filed September 16, 2009.

The request is **APPROVED**.

The request was signed by James P. Cleary on behalf of the practitioners of record associated with Customer Number: 64046.

Applicant is reminded that there is no attorney of record at this time.

All future correspondence will be directed to inventor Payam Lavi at the first address indicated below.

Telephone inquiries concerning this decision should be directed to Irvin Dingle at (571) 272-3210.

Irvin Dingle
Petitions Examiner
Office of Petitions

cc: Payam Lavi
2486 Birchwood Way
Oceanside, CA 92054

cc: James P. Cleary
3580 Carmel Mountain Road, Suite 300
San Diego, CA 92130

UNITED STATES PATENT AND TRADEMARK OFFICE

UNITED STATES DEPARTMENT OF COMMERCE
United States Patent and Trademark Office
Address: COMMISSIONER FOR PATENTS
P.O. Box 1450
Alexandria, Virginia 22313-1450
www.uspto.gov

APPLICATION NUMBER	FILING OR 371(C) DATE	FIRST NAMED APPLICANT	ATTY. DOCKET NO./TITLE
12/194,184	08/19/2008	Payam Lavi	35057-002002US

CONFIRMATION NO. 6180

POWER OF ATTORNEY NOTICE

64046
MINTZ, LEVIN, COHN, FERRIS, GLOVSKY AND POPEO, P.C
ONE FINANCIAL CENTER
BOSTON, MA 02111

OC000000038254905

Date Mailed: 10/16/2009

NOTICE REGARDING CHANGE OF POWER OF ATTORNEY

This is in response to the Power of Attorney filed 09/16/2009.

- The withdrawal as attorney in this application has been accepted. Future correspondence will be mailed to the new address of record. 37 CFR 1.33.

/idingle/

Office of Data Management, Application Assistance Unit (571) 272-4000, or (571) 272-4200, or 1-888-786-0101

UNITED STATES PATENT AND TRADEMARK OFFICE

UNITED STATES DEPARTMENT OF COMMERCE
United States Patent and Trademark Office
Address: COMMISSIONER FOR PATENTS
P.O. Box 1450
Alexandria, Virginia 22313-1450
www.uspto.gov

APPLICATION NUMBER	FILING OR 371(C) DATE	FIRST NAMED APPLICANT	ATTY. DOCKET NO./TITLE
12/194,184	08/19/2008	Payam Lavi	35057-002002US

CONFIRMATION NO. 6180

POA ACCEPTANCE LETTER

64046
MINTZ, LEVIN, COHN, FERRIS, GLOVSKY AND POPEO, P.C
ONE FINANCIAL CENTER
BOSTON, MA 02111

OC000000038254943

Date Mailed: 10/16/2009

NOTICE OF ACCEPTANCE OF POWER OF ATTORNEY

This is in response to the Power of Attorney filed 09/16/2009.

The Power of Attorney in this application is accepted. Correspondence in this application will be mailed to the above address as provided by 37 CFR 1.33.

/idingle/

Office of Data Management, Application Assistance Unit (571) 272-4000, or (571) 272-4200, or 1-888-786-0101

UNITED STATES PATENT AND TRADEMARK OFFICE

Commissioner for Patents
United States Patent and Trademark Office
P.O. Box 1450
Alexandria, VA 22313-1450
www.uspto.gov

Panitch, Schwarze Belisario & Nadel, LLP
One Commerce Square
2005 Market Street, Suite 2200
Philadelphia, PA 19103

COPY MAILED

SEP 15 2008

In re Application of	:	
Ruey J. Yu et al.	:	
Application No. 12/194,203	:	DECISION ON PETITION
Filed: August 19, 2008	:	TO MAKE SPECIAL UNDER
Attorney Docket No. 8976-246U2	:	37 CFR 1.102(c)(1)
	:	

This is a decision on the petition under 37 CFR 1.102(c)(1), filed August 27, 2008, to make the above-identified application special based on applicant's age as set forth in M.P.E.P. § 708.02, Section IV.

The petition is **GRANTED**.

A grantable petition to make an application special under 37 CFR 1.102(c)(1) and MPEP § 708.02, Section IV: Applicant's Age must be accompanied by evidence showing that at least one of the applicants is 65 years of age, or more, such as a birth certificate or a statement by applicant. No fee is required

The instant petition includes a statement by the attorney of record. Accordingly, the above-identified application has been accorded "special" status.

Telephone inquiries concerning this decision should be directed to Kimberly Inabinet at 571-272-4618.

All other inquiries concerning either the examination or status of the application should be directed to the Technology Center.

Upon completion of the pre-examination processing by the Office of Patent Application Processing, this application will be referred to Technology Center Art Unit 1614 for action on the merits commensurate with this decision.

Kimberly Inabinet

Kimberly Inabinet
Petitions Examiner
Office of Petitions

UNITED STATES PATENT AND TRADEMARK OFFICE

Commissioner for Patents
United States Patent and Trademark Office
P.O. Box 1450
Alexandria, VA 22313-1450
www.uspto.gov

MAIL

DEC 09 2008

DIRECTOR'S OFFICE
TECHNOLOGY CENTER 2600

WENDEROTH, LIND & PONACK L.L.P.
2033 K. STREET, NW
SUITE 800
WASHINGTON DC 20006

In re Application of KAWAGUCHI, YUKO, et al. Application No. 12/194,276 Filed: August 19, 2008 Attorney Docket No. 2008_1515	: : : : : : :	DECISION ON REQUEST TO PARTICIPATE IN PATENT PROSECUTION HIGHWAY PROGRAM AND PETITION TO MAKE SPECIAL UNDER 37 CFR 1.102(d)

This is a decision on the request to participate in the Patent Prosecution Highway (PPH) program and the petition under 37 CFR 1.102(d), filed September 3, 2008, to make the above-identified application special.

The request and petition are **GRANTED**.

A grantable request to participate in the PPH program and petition to make special require:

(1) The U.S. application must validly claim priority under 35 U.S.C. 119(a) to one or more applications filed in the JPO;
(2) Applicant must submit a copy of the allowable/patentable claim(s) from the JPO application(s) along with an English translation thereof and a statement that the English translation is accurate;
(3) All the claims in the U.S. application must sufficiently correspond or be amended to sufficiently correspond to the allowable/patentable claim(s) in the JPO application(s);
(4) Examination of the U.S. application has not begun;
(5) Applicant must submit a copy of all the office actions from each of the JPO application(s) containing the allowable/patentable claim(s) along with an English translation thereof and a statement that the English translation is accurate;
(6) Applicant must submit an IDS listing the documents cited by the JPO examiner in the JPO office action along with copies of documents except U.S. patents or U.S. patent application publications; and
(7) The required petition fee under 37 CFR 1.17(h).

The request to participate in the PPH program and petition comply with the above requirements. Accordingly, the above-identified application has been accorded "special" status.

Telephone inquiries concerning this decision should be directed to Kenneth Wieder at 571-272-2986.

All other inquiries concerning the examination or status of the application should be directed to Patent Application Information Retrieval (PAIR) system.

The application is being forwarded to the examiner for action on the merits commensurate with this decision.

Kenneth Wieder
Quality Assurance Specialist
Technology Center 2600
Communications

UNITED STATES PATENT AND TRADEMARK OFFICE

Commissioner for Patents
United States Patent and Trademark Office
P.O. Box 1450
Alexandria, VA 22313-1450
www.uspto.gov

The Law Firm of Andrea Hence Evans, LLC
14625 Baltimore Ave., #853
Laurel MD 20707

DEC 18 2008

In re Application of: MESERTH, TIMOTHY A. et al.
Application No.: 12/194299
Filed: August 19, 2008
Title: SELF-BRUSHING AIR MOVING DEVICE

DECISION ON PETITION TO MAKE SPECIAL FOR NEW APPLICATION UNDER 37 C.F.R. § 1.102 & M.P.E.P. § 708.02

This is a decision on the renewed petition filed on August 19, 2008 to make the above-identified application special for accelerated examination procedure under 37 C.F.R. § 1.102(d).

The petition to make the application special is GRANTED.

The application is eligible for accelerated examination and the petition complies with the conditions for granting the application special status pursuant to the "Change to Practice for Petitions in Patent Applications to Make Special and for Accelerated Examination" published June 26, 2006, in the Federal Register. (71 Fed. Reg. 36323).

The prosecution of the instant application will be conducted expeditiously according to the following guidelines.

1. The application will be docketed to an examiner and taken up for action within two weeks of the date of this decision.

2. Restriction Practice:
   If the examiner determines that the claims are not directed to a single invention, a telephone request to elect one single invention will be made pursuant to MPEP 812.01. As a prerequisite to the grant of this petition, the applicant has agreed to make an oral election, by telephone, without traverse. If the applicant refuses to make an election without traverse, or the examiner cannot reach the applicant after a reasonable effort, the examiner will treat the first claimed invention (invention defined by claim 1) as having being constructively elected without traverse for examination.

3. Office action:
   If it is determined that, after appropriate consultation, there is a potential rejection or any other issue to be addressed, the examiner will telephone the applicant and arrange an interview to discuss and resolve the issue. An Office action, other than a Notice of Allowance and Fee(s) Due (Notice of Allowance), will not be issued unless either: 1) an interview was conducted but did not result in agreed to action that places the application in condition for allowance, or, 2) a determination is made that an interview would be unlikely to result in the application being placed in condition for allowance, and 3) an internal conference has been held to review any rejection of any claim.

4. Time for Reply:
   An Office action other than a Notice of Allowance or a final Office action will set a shortened statutory period of one month or thirty days, whichever is longer, for reply with no extension of time available under 37 CFR 1.136(a). Failure to timely file a reply within this non-extendible period for reply will result in the abandonment of the application.

5. Reply by Applicant:
   A timely reply to an Office action other than the Notice of Allowance must be submitted electronically via EFS or EFS-web and limited to addressing the rejections, objections and requirement made. Any amendment that attempts to: 1) add claims which would result in more than three pending independent claims or more than twenty pending total claims; 2) present claims not encompassed by the pre-examination search or an updated accelerated examination support document; or 3) present claims that are directed a non-elected invention or an invention other than that previously claimed and examined in the application, will be treated as not fully responsive and will not be entered.

   For any amendment to the claims (including any new claim) that is not encompassed by the accelerated examination support document, applicant must provide an updated accelerated examination support document that encompasses the amended or new claims at the time of filing of the amendment.

   To proceed expeditiously with the examination, it is recommended that a reply with amendments made to any claim or with any new claim being added be accompanied by an updated accelerated examination support document or a statement explaining how the amended or new claim is supported by the original accelerated examination support document.

6. Information Disclosure Statement (IDS):
   Any IDS filed during prosecution must be submitted electronically via EFS or EFS-web, accompanied by an updated accelerated examination support document, and be in compliance with 37 CFR 1.97 and 1.98.

7. Post-Allowance Processing:
   To expedite processing of the allowed application into a patent, the applicant must: 1) pay the required fees within one month of the date of the Notice of Allowance, and 2) not file any post allowance papers not required by the Office. In no event may the issue fee be paid and accepted later than three months from the date of the Notice of Allowance.

8. After-Final and Appeal Procedures:
   To expedite prosecution, after receiving the final Office action, applicant must: 1) promptly file a notice of appeal, an appeal brief and appeal fees; and 2) not request a pre-appeal brief conference.

   Any amendment, affidavit or other evidence filed after final Office action must comply with applicable rules and the requirements outlined in numbered paragraphs 5 and 6 above.

   On appeal, the application will proceed according to normal appeal procedures. After appeal, the application will again be treated special.

9. Proceedings Outside the Normal Examination Process:
   If the application becomes involved in a proceeding that is outside the normal examination process (e.g., a secrecy order, national security review, interference proceeding, petitions under 37 CFR 1.181, 182 or 183), the application will be treated special before and after such proceeding.

10. Final Disposition:
    The twelve month goal of this accelerated examination procedure ends with a final disposition. The mailing of a final Office action, a Notice of Allowance, the filing of a Notice of Appeal, or the filing of a Request for Continued Examination (RCE) is the final disposition.

If, during prosecution, a paper is not filed electronically using EFS-web, a reply is filed but is not fully responsive, the application is involved in an appeal, or a proceeding outside normal examination process, the application will still be examined expeditiously, however, the final disposition may occur more than twelve months from the filing of the application.

Any inquiry regarding this decision should be directed to Ehud Gartenberg, TC 3700 Special Program Examiner, at (571) 272-4828.

/Ehud Gartenberg/
Ehud Gartenberg, Special Programs Examiner
Technology Center 3700

As a courtesy to the Petitioner, and for future reference, the following comments are made:

1) With regard to the Pre-Examination Search Document, it is noted that Petitioner states that the entire class 454, containing at the time 47,425 patents and application publications was searched on August 7, 2008. This is believed to be in error, and a more accurate record keeping would be desirable.

2) With regard to the Accelerated Examination Support Document (AESD), it is noted that the showing of support under 35 USC 112, 1st paragraph lacks specificity. On p. 4 of the AESD, Petitioner proposed the following mapping of the limitations unto the specifications:

> **a back flow damper assembly positioned over the air outlet, wherein the back flower damper assembly further comprises at least one damper door movable in an open position and a closed position is disclosed on Page 3, lines 3-10, the at least one damper door having at least one tooth such that when the damper door is in the closed position, the at least one tooth interacts with at least one of the plurality of openings in the mesh to substantially cover the periphery of the openings in the mesh is disclosed in Page 5, lines 10-30 and Figures 2 and 3.**

As understood, the limitations that are claimed to define over the prior art in combination with the other limitations of claim 1 are: the damper door 20, 21 (p. 5, l. 9), comprising the at least one tooth 30 (p. 5, l. 17) that interacts with at least one of the openings 915 (p. 5, ll. 19) of mesh 910 (p. 5, l. 19), see Fig. 3 for all of the above limitations. Specifically identifying the claimed limitations in the fashion shown above would have met the specificity requirement of the program. It is also noted that: 1) a statement regarding lack of means-plus-function claim language is missing; 2) Showing of support under 35 USC 1st paragraph in the (parent) application for which domestic priority is claimed, is missing.

The requirement of section II element 6.5 can be satisfied by listing verbatim all the filed claims (by "copy and paste") and by indicating where the application (and separately each one of the priority documents – if applicable) teaches <u>each discrete limitation</u> (without bundling limitations to the extent possible) in each one of said filed claims, by indicating the element number and/or the relevant page and line numbers. To the extent possible, Petitioner should indicate the enablement location in the specification as required by statute, i.e., "the manner and process of making and using it," rather than pointing to the first occurrence of establishing antecedent for the limitation in the specification. For this reason Petitioner should indicate, to the extent possible, the combination of the element, figure, page, (or paragraph), and line numbers in the specification where the mapped limitation is actually taught and enabled. If the application(s) for which domestic priority is claimed is/are identical to the present application, a statement to the effect that they are "substantially identical" in lieu of the required additional mapping is acceptable. Petitioner's attention is also drawn to the requirements relevant under 35 U.S.C 112, 6th paragraph, listed above. Should this requirement not apply to the present application, Petitioner should make a statement in this regard.

3) The present application appears to be short and straight forward to be understood, and therefore the petition was granted. However, for the benefit of future petitions, it is suggested to follow the examples and guidelines given above.

4) The present decision granting the present petition in spite of its deficiencies should not be indicative that future deficient petitions will be granted as well.

/Ehud Gartenberg/
Ehud Gartenberg, Special Programs Examiner
Technology Center 3700

UNITED STATES PATENT AND TRADEMARK OFFICE

Commissioner for Patents
United States Patent and Trademark Office
P.O. Box 1450
Alexandria, VA 22313-1450
www.uspto.gov

In re Application of
William W. Weil

Application No. 12194380

Filed: August 19,2008

Attorney Docket No. COMP03US01

:DECISION ON PETITION TO MAKE SPECIAL
:UNDER 37 CFR 1.102(c)(1)

This is a decision on the electronic petition under 37 CFR 1.102 (c)(1), filed 16-SEP-2008 to make the above-identified application special based on applicant's age as set forth in MPEP § 708.02, Section IV.

The petition is **GRANTED**.

A grantable petition to make an application special under 37 CFR 1.102(c)(1), MPEP § 708.02, Section IV: Applicant's Age must include a statement by applicant or a registered practitioner having evidence that applicant is at least 65 years of age. No fee is required.

Accordingly, the above-identified application has been accorded "special" status and will be taken up for action by the examiner upon the completion of all pre-examination processing.

Telephone inquiries concerning this electronic decision should be directed to the Electronic Business Center at 866-217-9197.

All other inquiries concerning either the examination or status of the application should be directed to the Technology Center.

UNITED STATES PATENT AND TRADEMARK OFFICE

UNITED STATES DEPARTMENT OF COMMERCE
United States Patent and Trademark Office
Address: COMMISSIONER FOR PATENTS
P.O. Box 1450
Alexandria, Virginia 22313-1450
www.uspto.gov

APPLICATION NO.	FILING DATE	FIRST NAMED INVENTOR	ATTORNEY DOCKET NO.	CONFIRMATION NO.
12/194,400	08/19/2008	Stephen Peter Legg	GB920080132US2	6552

77062 7590 10/01/2008
The Law Firm of Andrea Hence Evans, LLC
14625 Baltimore Ave., #853
Laurel, MD 20707

EXAMINER
MURALIDAR, RICHARD V

ART UNIT	PAPER NUMBER
2838	

MAIL DATE	DELIVERY MODE
10/01/2008	PAPER

Please find below and/or attached an Office communication concerning this application or proceeding.

The time period for reply, if any, is set in the attached communication.

UNITED STATES PATENT AND TRADEMARK OFFICE

Commissioner for Patents
United States Patent and Trademark Office
P.O. Box 1450
Alexandria, VA 22313-1450
www.uspto.gov

The Law Firm of Andrea Hence Evans, LLC
14625 Baltimore Ave., #853
Laurel MD 20707

In re Application of: Stephen P. LEGG Serial No.: 12/194,400 Filed: August 19, 2008 Title: WIRELESS BATTERY CHARGER	DECISION ON PETITION TO MAKE SPECIAL FOR NEW APPLICATION UNDER 37 C.F.R. § 1.102 & M.P.E.P. § 708.2

This is a decision on the petition filed on August 19, 2008 to make the above-identified application special for accelerated examination procedure under 37 C.F.R. § 1.102(d).

The petition to make the application special is **DISMISSED**.

REGULATION AND PRACTICE

A grantable petition to make special under 37 C.F.R. § 1.102(d) and pursuant to the "Change to Practice for Petitions in Patent Applications to Make Special and for Accelerated Examination" published in the Federal Register on June 26, 2006 (71 Fed. Reg. 36323), must satisfy the following conditions:

I. Conditions Regarding the Application:

1. the application must be a non-reissue utility or design application filed under 37 CFR 1.111(a);
2. the application, the petition and the required fees must be filed electronically using the USPTO's electronic filing system (EFS), or EFS-web; if not filed electronically, a statement asserting that EFS and EFS-web were not available during the normal business hours.
3. at the time of filing, the application must be complete under 37 CFR 1.51 and in condition for examination;
4. the application must contain three or fewer independent claims and twenty or fewer total claims and the claims must be directed to a single invention.

II. Conditions Regarding the Petition:

The petition must:

1. be filed with the application;
2. include a statement that applicant agrees not to separately argue the patentability of any independent claim during any appeal in the application;

3. include a statement that applicant agrees to make an election without traverse in a telephone interview;

4. include a statement that applicant agrees to conduct such an interview when requested by the examiner; and

5. include a statement, made based on a good faith belief, that a preexamination search in compliance with the following requirements, was conducted, including an identification of the field of search by United States class and subclass, where applicable, and for database searches, the search logic or chemical structure or sequence used as a query, the name of the file(s) searched and the database service, and the date of the search.

The preexamination search must:

5.1 involve U.S. patents and patent application publications, foreign patent documents, and non-patent literature, unless the applicant can justify with reasonable certainty that no references more pertinent than those already identified are likely to be found in the eliminated sources and includes such a justification with this statement;

5.2. be directed to the claimed invention and encompass all of the features of the claims, giving the claims the broadest reasonable expectation; and

5.3. encompass the disclosed features that may be claimed.

6. must provide in support of the petition an accelerated examination support document. An accelerated examination support document must include:

6.1. an information disclosure statement (IDS) in compliance with 37 CFR 1.98 citing each reference deemed most closely related to the subject matter of each of the claims;

6.2. an identification of all the limitations in the claims that are disclosed by the reference specifying where the limitation is disclosed in the cited reference;

6.3. a detailed explanation of how each of the claims are patentable over the references cited with particularity required by 37 CFR 1.111(b) and (c);

6.4. a concise statement of the utility of the invention as defined in each of the independent claims (unless the application is a design application);

6.5. a showing of where each limitation of the claims finds support under 35 USC 112, first paragraph, in the written description of the specification. If applicable, the showing must also identify: (1) each means- (or step) plus-function claim element that invokes consideration under 35 USC 112, sixth paragraph; and (2) the structure, material, or acts in the specification that corresponds to each means- (or step) plus-function claim element that invokes consideration under 35 USC 112, sixth paragraph; if the application claims the benefit of one or more applications under title 35, United States Code, the showing must also include where each limitation of the claims finds support under 35 USC 112, first paragraph, in each such application in which such supports exists; and

6.6. an identification of any cited references that may be disqualified under 35 USC 103(c).

REVIEW OF FACTS

The conditions regarding the application (section I, subsections 1-4) discussed above are considered to have been met. Additionally, the conditions regarding the petition (section II, subsections 1-5) are considered to have been met. However, the petition fails to comply with the

all the conditions set forth in section II, subsection 6. Therefore, the petition fails to meet the required conditions to be accorded special status under the accelerated examination procedure.

Regarding the requirements of section II, subsection 6.5, the petition is required to provide a showing of where ***each limitation*** (italics added) of the claims finds support under 35 USC 112, first paragraph in the ***written description*** (italics added) of the specification. While the examination support document provides a showing for the current application, as set forth in item 6.5 on page 2 of this decision, "if the application claims the benefit of one or more applications under title 35, United States Code, the showing must also include where each limitation of the claims finds support under 35 USC 112, first paragraph, in each such application in which such supports exists." The current application claims the benefit of a parent application under title 35, United States Code, as noted on page 1 of the specification, but the examination support document fails to provide a showing of support in the parent application. For these reasons, the petition does not meet the requirement of section II, subsection 6.5.

DECISION

For the above-stated reasons, the petition is **dismissed**. The application will therefore be taken up by the examiner for action in its regular turn.

Petitioner is given a single opportunity to perfect the petition. Any request for reconsideration of this decision must be submitted within 1 (one) month or 30 (thirty) days, whichever is longer, from the date of this decision in order to be considered timely. Any request for reconsideration must address the deficiencies indicated above.

Petition is reminded that, upon granting of the special status of the application on request for reconsideration, the application will be processed expeditiously. However, due to the dismissal of the instant petition, examination may not be completed within twelve months of the filing date of the application.

Any inquiries regarding this decision should be directed to Quality Assurance Specialist Jose' G. Dees at (571) 272-1569.

Jose' G. Dees, Quality Assurance Specialist
Technology Center 2800
Semiconductors, Electrical and Optical
Systems and Components

UNITED STATES PATENT AND TRADEMARK OFFICE

UNITED STATES DEPARTMENT OF COMMERCE
United States Patent and Trademark Office
Address: COMMISSIONER FOR PATENTS
P.O. Box 1450
Alexandria, Virginia 22313-1450
www.uspto.gov

APPLICATION NO.	FILING DATE	FIRST NAMED INVENTOR	ATTORNEY DOCKET NO.	CONFIRMATION NO.
12/194,400	08/19/2008	Stephen Peter Legg	GB920080132US2	6552

77062 7590 12/18/2008
The Law Firm of Andrea Hence Evans, LLC
14625 Baltimore Ave., #853
Laurel, MD 20707

EXAMINER
MURALIDAR, RICHARD V

ART UNIT	PAPER NUMBER
2838	

MAIL DATE	DELIVERY MODE
12/18/2008	PAPER

Please find below and/or attached an Office communication concerning this application or proceeding.

The time period for reply, if any, is set in the attached communication.

UNITED STATES PATENT AND TRADEMARK OFFICE

Commissioner for Patents
United States Patent and Trademark Office
P.O. Box 1450
Alexandria, VA 22313-1450
www.uspto.gov

The Law Firm of Andrea Hence Evans, LLC
14625 Baltimore Ave., #853
Laurel MD 20707

In re Application of: LEGG, Stephen Peter Serial No.: 12/194,400 Filed: August 19, 2008 Docket Number: GB920080132US2 Title: BATTERY LABEL WITH WIRELESS BATTERY CHARGING CIRCUIT	DECISION ON PETITION TO MAKE SPECIAL FOR NEW APPLICATION UNDER 37 C.F.R. § 1.102

This is a decision on the request for reconsideration of the petition to make the above-identified application special for accelerated examination procedure under 37 C.F.R. § 1.102(d) filed October 21, 2008. The petition to make special under 37 C.F.R. § 1.102(d) was dismissed on October 1, 2008.

The petition to make the application special is GRANTED.

The application is eligible for accelerated examination and the petition complies with the conditions for granting the application special status pursuant to M.P.E.P. §708.02(a) and to the "Change to Practice for Petitions in Patent Applications to Make Special and for Accelerated Examination" published June 26, 2006, in the Federal Register. (71 Fed. Reg. 36323).

Since the application has been examined and allowed the following procedure applies for Post-Allowance Processing:

> To expedite processing of the allowed application into a patent, the applicant must: 1) pay the required fees within one month of the date of the Notice of Allowance, and 2) not file any post allowance papers not required by the Office. In no event may the issue fee be paid and accepted later than three months from the date of the Notice of Allowance.

Any inquiry regarding this decision should be directed to the undersigned at (571) 272-1569.

Jose' G. Dees, Quality Assurance Specialist
Technology Center 2800 - Semiconductors,
Electrical & Optical Systems & Components

UNITED STATES PATENT AND TRADEMARK OFFICE

UNITED STATES DEPARTMENT OF COMMERCE
United States Patent and Trademark Office
Address: COMMISSIONER FOR PATENTS
P.O. Box 1450
Alexandria, Virginia 22313-1450
www.uspto.gov

MORRISON & FOERSTER LLP
425 MARKET STREET
SAN FRANCISCO, CA 94105-2482

Mail Date: 04/21/2010

Applicant	: Samuel T. CREWS	: DECISION ON REQUEST FOR
Patent Number	: 7641075	: RECALCULATION of PATENT
Issue Date	: 01/05/2010	: TERM ADJUSTMENT IN VIEW
Appliction No	: 12/194,523	: OF WYETH AND NOTICE OF INTENT TO
Filed	: 08/19/2008	: ISSUE CERTIFICATE OF CORRECTION
		:

The Request for Recalculation is **GRANTED** to the extent indicated.

The patent term adjustment has been determined to be **0** days. The USPTO will *sua sponte* issue a certificate of correction reflecting the amount of PTA days determined by the recalculation.

Prior to the issuance of the certificate of correction, the USPTO will afford patentee an opportunity to be heard and request reconsideration. Accordingly, patentee has **one month or thirty (30) days**, whichever is longer, to file a request for reconsideration of this patent term adjustment calculation. See 35 U.S.C. 154(b)(3)(B)(ii) and 37 CFR 1.322(a)(4). No extensions of time will be granted under 37 CFR 1.136.

Patentee should use document code PET.OP if electronically filing a request for reconsideration of this patent term adjustment calculation. The patentee must also include the information required by 37 CFR 1.705(b)(2) and the fee required by 37 CFR 1.18(e). If patentee does not file a timely request for reconsideration of this patent term adjustment calculation including the information required by 37 CFR 1.705(b)(2) and the fee required by 37 CFR 1.18(e), the USPTO will issue a certificate of correction reflecting the PTA determination noted above.

Patentee should be aware that in order to preserve the right to review in the United States District Court for the District of Columbia of the USPTO patent term adjustment determination, patentee must ensure that he or she also take the steps required under 35 U.S.C. 154(b)(4)(A) in a timely manner. Nothing in the request for recalculation should be construed as providing an alternative time frame for commencing a civil action under 35 U.S.C. 154(b)(4)(A).

Any questions concerning this decision should be directed to the Office of Patent Legal Administration at 571-272-7702.

UNITED STATES PATENT AND TRADEMARK OFFICE

UNITED STATES DEPARTMENT OF COMMERCE
United States Patent and Trademark Office
Address: COMMISSIONER FOR PATENTS
P.O. Box 1450
Alexandria, Virginia 22313-1450
www.uspto.gov

APPLICATION NO.	FILING DATE	FIRST NAMED INVENTOR	ATTORNEY DOCKET NO.	CONFIRMATION NO.
12/194,526	08/19/2008	Alejandro G. Schrott	YOR920070729US1	6791

76301 7590 10/17/2008
Leander F. Aulisio
320 23rd Street S. #705
Arlington, VA 22202

EXAMINER

ART UNIT	PAPER NUMBER
1795	

MAIL DATE	DELIVERY MODE
10/17/2008	PAPER

Please find below and/or attached an Office communication concerning this application or proceeding.

The time period for reply, if any, is set in the attached communication.

UNITED STATES PATENT AND TRADEMARK OFFICE

Commissioner for Patents
United States Patent and Trademark Office
P.O. Box 1450
Alexandria, VA 22313-1450
www.uspto.gov

CST

10/17/08

In re application of Alejandro G. Schrott et al Serial No. 12/194,526 Filed: August 19, 2008 For: NANOSCALE ELECTRODES FOR PHASE CHANGE MEMORY DEVICES	:	DECISION ON PETITION TO MAKE SPECIAL

This is a decision on the petition filed on August 19, 2008 to make the above-identified application special under the accelerated examination program.

The petition to make the application special is **DENIED.**

REGULATION AND PRACTICE

To be eligible for accelerated examination under 37 C.F.R. § 1.102(d) and pursuant to the "Changes to Practice for Petitions in Patent Applications to Make Special and for Accelerated Examination" published in the Federal Register on June 26, 2006 (71 Fed. Reg. 36323), the following conditions must be satisfied:

1. The application must be a non-reissue utility or design application filed under 37 CFR 1.111(a);
2. The application, the petition and the required fees must be filed electronically using the USPTO's electronic filing system (EFS), or EFS-web; if not filed electronically, a statement asserting that EFS and EFS-web were not available during the normal business hours;
3. The application, at the time of filing, must be complete under 37 CFR 1.51 and in condition for examination;
4. The application must contain three or fewer independent claims and twenty or fewer total claims and the claims must be directed to a single invention.

The application as filed is not eligible for accelerated examination under 37 C.F.R. § 1.102(d) because the application, at the time of filing, was not in condition for examination. Note, specifically, the NOTICE TO FILE CORRECTED APPLICATION

PAPERS mailed on August 27, 2008, which indicates that the application was not in condition for examination at the time of filing.

MPEP 708.02(a), section VIII further states:

> The petition to make special will be dismissed if the application omits an item or includes a paper that causes the Office of Initial Patent Examination (OIPE) to mail a notice during the formality review (e.g., a notice of incomplete application, notice to file missing parts, notice to file corrected application papers, notice of omitted items, or notice of informal application). The opportunity to perfect a petition (subsection II above) does not apply to applications that are not in condition for examination on filing.

For the above-stated reasons, the petition is denied. The application will therefore be taken up by the examiner for action in its regular turn.

Any inquiry regarding this decision should be directed to Christine Tierney, Quality Assurance Specialist, at (571) 272-1055.

/Christine Tierney/

Christine Tierney
Quality Assurance Specialist
Technology Center 1700

UNITED STATES PATENT AND TRADEMARK OFFICE

Commissioner for Patents
United States Patent and Trademark Office
P.O. Box 1450
Alexandria, VA 22313-1450
www.uspto.gov

WILKINSON & GRIST
6TH FLOOR, PRINCE"S BUILDING
CHATER ROAD, CENTRAL
HONG KONG HK HONG KONG

MAILED

OCT 19 2009

OFFICE OF PETITIONS

In re Application of	:	
Xu, Bing	:	
Application No. 12/194,554	:	ON PETITION
Filed: August 20, 2008	:	
Attorney Docket No. H1584-30-US-CIP	:	

This is a decision on the petition under 37 C.F.R. § 1.137(b), filed June 25, 2009, to revive the above-identified application.

The petition is **GRANTED**.

The petition satisfies the requirements of 37 CFR 1.137(b) in that petitioner has supplied (1) the reply in the form of a signed Oath/Declaration, Replacement Drawings and the $65.00 late surcharge, (2) the petition fee, and (3) a proper statement of unintentional delay.

Telephone inquiries concerning this decision should be directed to the undersigned at (571) 272-3206.

This matter is being referred to the Office of Patent Application Processing for further pre-examination processing. Thereafter, the application will be referred to Technology Center AU 1656 for examination on the merits.

Liana Walsh
Petitions Examiner
Office of Petitions

UNITED STATES PATENT AND TRADEMARK OFFICE

Commissioner for Patents
United States Patent and Trademark Office
P.O. Box 1450
Alexandria, VA 22313-1450
www.uspto.gov
DIW May-09

LANXESS CORPORATION
111 RIDC PARK WEST DRIVE
PITTSBURGH PA 15275-1112

MAILED

MAY 13 2009

OFFICE OF PETITIONS

In re Application of Rosenhahn, Madersdorfer, Schnellrath, and Guazzelli Application Number: 12/194580 Filing Date: 08/20/2008 Attorney Docket Number: P001 00064N	DECISION REFUSING STATUS UNDER 37 CFR 1.47(a)

This is in response to the petition under 37 CFR 1.47(a) filed on April 3, 2009.

The petition is **DISMISSED**.

Rule 47 applicant is given TWO MONTHS from the mailing date of this decision to reply, correcting the below-noted deficiencies. Any reply should be entitled "Request for Reconsideration of Petition Under 37 CFR 1.47(a)," and should only address the deficiencies noted below, except that the reply may include an oath or declaration executed by the non-signing inventor. **FAILURE TO RESPOND WILL RESULT IN ABANDONMENT OF THE APPLICATION.** Extensions of time may be obtained in accordance with 37 CFR 1.136(a).

The above-identified application was filed on August 20, 2008, without an executed oath or declaration.

Accordingly, on September 3, 2008, a Notice to File Missing Parts of Nonprovisional Application was mailed, requiring an executed oath or declaration and a surcharge for its late filing. A two (2) month shortened period for reply was set.

In response, on April 3, 2009, the present petition, surcharge, and petition fee were filed. A five (5) month extension of time and fee were additionally filed, along with a declaration naming Carsten Rosenhan, Robert Madersdorfer, Ingo Schellrath, and Sergio dal alba Guazzelli as joint inventors, signed by joint inventors Rosenhahn and Madersdorfer on behalf of themselves and non-signing joint inventors Schnellrath and Guazzelli.

Petitioners state that a copy of the application and declaration were sent to non-signing inventors Schnellrath and Guazelli with a request that the inventors sign and return the declaration. Petitioners state that joint inventor Guazzelli returned the application papers and declaration unsigned. Joint inventor Schnellrath send a letter to applicants stating that he needed an additional 30 days to review the application.

A grantable petition under 37 CFR 1.47(a) requires:

(1) proof that the non-signing inventor cannot be reached or located, notwithstanding diligent effort, or refuses to sign the oath or declaration after having been presented with the application papers (specification, claims and drawings);

(2) an acceptable oath or declaration in compliance with 35 U.S.C. §§ 115 and 116;

(3) the petition fee;

(4) a surcharge of $130 or $65 (small entity) if the petition and/or declaration is not filed at the time of filing the application, and

(5) a statement of the last known address of the non-signing inventor.

The petition lacks items (1) and (2).

With regards to item (1), petitioners must state whether any further communications were held with Schnellrath, in view of his request for additional time.

In this regard, if there is a written refusal, a copy of the written refusal must be supplied to the Office with any renewed petition. If the refusal was made orally to a person, then that person must provide details of the refusal in an affidavit or declaration of facts.

With regards to item (2) the declaration is defective in that it does not state the citizenship of non-signing inventors Guazzelli and Schnellrath.[1] A statement of the inventor's citizenship is a statutory requirement and cannot be waived.[2]

It is additionally noted that the mailing addresses for non-signing inventors Guazzelli and Schnellrath, and for signing inventor Madersdorfer, are missing from the oath or declaration.

---

[1] MPEP 605.01.

[2] 35 U.S.C. § 115, MPEP 605.01.

Each applicant's mailing or post office address is required to be supplied on the oath or declaration, if not stated in an application data sheet. Applicant's mailing address means that address at which he or she customarily receives his or her mail. Either applicant's home or business address is acceptable as the mailing address. The mailing address should include the ZIP Code designation. Since the term "post office address" as previously used in 37 CFR 1.63 may be confusing, effective November 7, 2000, 37 CFR 1.63 was amended to use the term "mailing address" instead.

The object of requiring each applicant's mailing address is to enable the Office to communicate directly with the applicant if desired; hence, the address of the attorney with instruction to send communications to applicant in care of the attorney is not sufficient.

In situations where an inventor does not execute the oath or declaration and the inventor is not deceased, such as in an application filed under 37 CFR 1.47, the inventor's most recent home address must be given to enable the Office to communicate directly with the inventor as necessary.[3]

A new oath or declaration must be filed, signed by each of the signing inventors on behalf of themselves and the non-signing inventors, listing the citizenship, mailing address, and residence city and state or city and foreign county of each of the inventors.

Petitioners are reminded that any oath or declaration filed with a renewed petition must identify both the application number and filing date of the application.

Further correspondence with respect to this matter should be addressed as follows:

By mail: Mail Stop Petition
Commissioner for Patents
P.O. Box 1450
Alexandria, VA 22313-1450

By FAX: (571) 273-8300
Attn: Office of Petitions

By hand: Customer Service Window

[3] MPEP 605.03

Mail Stop Petition
Randolph Building
401 Dulany Street
Alexandria, VA 22314

Telephone inquiries related to this decision should be directed to the undersigned at 571-272-3231.

D Wood

Douglas I. Wood
Senior Petitions Attorney
Office of Petitions

UNITED STATES PATENT AND TRADEMARK OFFICE

Commissioner for Patents
United States Patent and Trademark Office
P.O. Box 1450
Alexandria, VA 22313-1450
www.uspto.gov
DIW OCI-09

LANXESS CORPORATION
111 RIDC PARK WEST DRIVE
PITTSBURGH PA 15275-1112

MAILED

OCT 21 2009

OFFICE OF PETITIONS

In re Application of	:
Rosenhahn, Madersdorfer,	: DECISION ACCORDING STATUS
Schnellrath, and Guazzelli	: UNDER 37 CFR 1.47(a)
Application Number: 12/194580	:
Filing Date: 08/20/2008	:
Attorney Docket Number: P001	:
00064N	:

This is in response to the renewed petition under 37 CFR 1.47(a) filed on August 20, 2009.

The petition is **GRANTED**.

Petitioners have shown that a copy of the application as filed was sent to the last known addresses of the non-signing inventors, Ingo Schnellrath and Sergio dal alba Guazzelli. However, the non-signing inventors failed to sign and return the declaration naming them as joint inventors along with Carsten Rosenhahn and Robert Madersdorfer.

As such, the showing of record is, that the non-signing inventors have constructively refused to join in the filing of the application.[1]

The above-identified application and papers have been reviewed and found in compliance with 37 CFR 1.47(a). This application is hereby accorded Rule 1.47(a) status.

As provided in Rule 1.47(c), this Office will forward notice of this application's filing to the non-signing inventor at the address given in the petition, not the Declaration. Notice of the filing of this application will also be published in the *Official Gazette*.

Receipt of the petition fee is acknowledged.

The application is being referred to Technology Center Art Unit 1793 for examination in due course.

Telephone inquiries related to this decision should be directed to the undersigned at 571-272-3231.

D Wood

Douglas I. Wood
Senior Petitions Attorney
Office of Petitions

[1] The declaration of Ana Maria Cadaval filed with the renewed petition states that joint inventor Schnellrath failed to return the signed declaration after having been sent a copy of the application. Ms. Cadaval also states that Mr. Schnellrath "was contacted by our legal department" and "responded that without further payment he will not sign the … declaration." While it is unclear whether Ms. Cadaval has first hand knowledge of the conversation with inventor Schnellrath, it is clear that she has first-hand knowledge that Schnellrath failed to sign and return the declaration after having been sent the application papers.

UNITED STATES PATENT AND TRADEMARK OFFICE

Commissioner for Patents
United States Patent and Trademark Office
P.O. Box 1450
Alexandria, VA 22313-1450
www.uspto.gov

Sergio dal alba Guazzelli
Rua Dr. Emilio Riba, 215 Cambui
Campinas, SP
BRAZIL

MAILED

OCT 21 2009

OFFICE OF PETITIONS

In re Application of
Rosenhahn, Madersdorfer, Schnellrath, and Guazelli
Application No. 12/194,580
Filed: August 20, 2008
For: IMPROVED YELLOW IRON OXIDE PIGMENTS

Dear Mr. Guazzelli:

You are named as a joint inventor in the above identified United States patent application, filed under the provisions of 35 U.S.C. 116 (United States Code), and 37 CFR 1.47(a), Rules of Practice in Patent Cases. Should a patent be granted on the application you will be designated therein as a joint inventor.

As a named inventor you are entitled to inspect any paper in the file wrapper of the application, order copies of all or any part thereof (at a prepaid cost per 37 CFR 1.19) or make your position of record in the application. Alternatively, you may arrange to do any of the preceding through a registered patent attorney or agent presenting written authorization from you. If you care to join the application, counsel of record (see below) would presumably assist you. Joining in the application would entail the filing of an appropriate oath or declaration by you pursuant to 37 CFR 1.63.

Telephone inquiries regarding this communication should be directed to the undersigned at 571/272-3231. Requests for information regarding your application should be directed to the File Information Unit at 571-272-3150. Information regarding how to pay for and order a copy of the application, or a specific paper in the application, should be directed to Certification Division at 571-272-3150 or 1-800-972-6382 (outside the Washington D.C. area).

D Wood

Douglas I. Wood
Senior Petitions Attorney
Office of Petitions

LANXESS CORPORATION
111 RIDC PARK WEST DRIVE
PITTSBURGH PA 15275-1112

UNITED STATES PATENT AND TRADEMARK OFFICE

Commissioner for Patents
United States Patent and Trademark Office
P.O. Box 1450
Alexandria, VA 22313-1450
www.uspto.gov
DIW Oct-09

Ingo Schnellrath
Alameda Dos Jasmins, 135
Condominio Morada das flores
Barrio Aldeia da Serra
Santana do Parnaiba, SP
BRAZIL

MAILED

OCT 21 2009

OFFICE OF PETITIONS

In re Application of
Rosenhahn, Madersdorfer, Schnellrath, and Guazelli
Application No. 12/194,580
Filed: August 20, 2008
For: IMPROVED YELLOW IRON OXIDE PIGMENTS

Dear Mr. Schnellrath:

You are named as a joint inventor in the above identified United States patent application, filed under the provisions of 35 U.S.C. 116 (United States Code), and 37 CFR 1.47(a), Rules of Practice in Patent Cases. Should a patent be granted on the application you will be designated therein as a joint inventor.

As a named inventor you are entitled to inspect any paper in the file wrapper of the application, order copies of all or any part thereof (at a prepaid cost per 37 CFR 1.19) or make your position of record in the application. Alternatively, you may arrange to do any of the preceding through a registered patent attorney or agent presenting written authorization from you. If you care to join the application, counsel of record (see below) would presumably assist you. Joining in the application would entail the filing of an appropriate oath or declaration by you pursuant to 37 CFR 1.63.

Telephone inquiries regarding this communication should be directed to the undersigned at 571/272-3231. Requests for information regarding your application should be directed to the File Information Unit at 571-272-3150. Information regarding how to pay for and order a copy of the application, or a specific paper in the application, should be directed to Certification Division at 571-272-3150 or 1-800-972-6382 (outside the Washington D.C. area).

D Wood

Douglas I. Wood
Senior Petitions Attorney
Office of Petitions

LANXESS CORPORATION
111 RIDC PARK WEST DRIVE
PITTSBURGH PA 15275-1112

UNITED STATES PATENT AND TRADEMARK OFFICE

UNITED STATES DEPARTMENT OF COMMERCE
United States Patent and Trademark Office
Address: COMMISSIONER FOR PATENTS
P.O. Box 1450
Alexandria, Virginia 22313-1450
www.uspto.gov

KREMBLAS, FOSTER, PHILLIPS & POLLICK
7632 SLATE RIDGE BOULEVARD
REYNOLDSBURG, OH 43068

Mail Date: 04/20/2010

Applicant	: Douglas E. Keiter	: DECISION ON REQUEST FOR
Patent Number	: 7633173	: RECALCULATION of PATENT
Issue Date	: 12/15/2009	: TERM ADJUSTMENT IN VIEW
Appliction No	: 12/194,588	: OF WYETH AND NOTICE OF INTENT TO
Filed	: 08/20/2008	: ISSUE CERTIFICATE OF CORRECTION
		:

The Request for Recalculation is **GRANTED** to the extent indicated.

The patent term adjustment has been determined to be **0** days. The USPTO will *sua sponte* issue a certificate of correction reflecting the amount of PTA days determined by the recalculation.

Prior to the issuance of the certificate of correction, the USPTO will afford patentee an opportunity to be heard and request reconsideration. Accordingly, patentee has **one month or thirty (30) days**, whichever is longer, to file a request for reconsideration of this patent term adjustment calculation. See 35 U.S.C. 154(b)(3)(B)(ii) and 37 CFR 1.322(a)(4). No extensions of time will be granted under 37 CFR 1.136.

Patentee should use document code PET.OP if electronically filing a request for reconsideration of this patent term adjustment calculation. The patentee must also include the information required by 37 CFR 1.705(b)(2) and the fee required by 37 CFR 1.18(e). If patentee does not file a timely request for reconsideration of this patent term adjustment calculation including the information required by 37 CFR 1.705(b)(2) and the fee required by 37 CFR 1.18(e), the USPTO will issue a certificate of correction reflecting the PTA determination noted above.

Patentee should be aware that in order to preserve the right to review in the United States District Court for the District of Columbia of the USPTO patent term adjustment determination, patentee must ensure that he or she also take the steps required under 35 U.S.C. 154(b)(4)(A) in a timely manner. Nothing in the request for recalculation should be construed as providing an alternative time frame for commencing a civil action under 35 U.S.C. 154(b)(4)(A).

Any questions concerning this decision should be directed to the Office of Patent Legal Administration at 571-272-7702.

United States Patent and Trademark Office

17 OCT 2008

Commissioner for Patents
United States Patent and Trademark Office
P.O. Box 1450
Alexandria, VA 22313-1450
www.uspto.gov

BERENATO, WHITE & STAVISH, LLC
6550 ROCK SPRING DRIVE
SUITE 240
BETHESDA MD 20817

In re Application of	:	
Johnston	:	
Application No.: 12/194,696	:	
Filing Date: 20 August 2008	:	DECISION
Attorney Docket No.: 5312.001	:	
For: Trough Reflectors For Solar Energy Collectors	:	

This is in response to the petition to revive under 37 CFR 1.137(b) filed on 20 October 2008.

BACKGROUND

International application PCT/AU2007/000095 was filed on 02 February 2007, claimed an earliest priority date of 03 February 2006, and designated the United States. The International Bureau transmitted a copy of the published international application to the USPTO on 09 August 2007. The 30 month time period for paying the basic national fee in the United States expired at midnight on 04 August 2008 (since 03 August 2008 was a Sunday). International application PCT/AU2007/000095 became abandoned with regard to the national stage in the United States for failure to timely pay the requisite basic national fee.

DISCUSSION

The instant application was filed under 35 U.S.C. 111(a) on 20 August 2008. The instant petition refers to a "proper reply" in the form of a "continuation application." This petition is being regarded as seeking revival of the international application for purposes of establishing co-pendency with the instant application filed under 35 U.S.C. 111(a).

A grantable petition to revive an abandoned application under 37 CFR 1.137(b) must be accompanied by (1) the required reply, unless previously filed; (2) the petition fee as set forth in § 1.17(m); (3) a statement that the entire delay in filing the required reply from the due date for the reply until the filing of a grantable petition pursuant to this paragraph was unintentional. The Commissioner may require additional information where there is a question whether the delay was unintentional; and (4) any terminal disclaimer (and fee as set forth in § 1.20 (d)) required pursuant to paragraph (c) of this section.

Regarding requirement (1), the "reply" requirement is regarded as having been satisfied by the filing of the instant application under 35 U.S.C. 111(a).

Regarding requirement (2), the petition fee has been paid.

Regarding requirement (3), the petition includes a statement that "the entire delay in filing the required reply from the due date for the required reply until the filing of a grantable petition under 37 CFR 1.137(b) was unintentional." This statement is being accepted in satisfaction of 37 CFR 1.137(b)(3).

Regarding requirement (4), no terminal disclaimer is required because the international filing date of the international application is later than 8 June 1995.

It is noted that the cross-reference added by preliminary amendment refers to a different international application number.

DECISION

The petition under 37 CFR 1.137(b) is **GRANTED** for purposes of establishing co-pendency between the instant application and international application PCT/AU2007/000095. Co-pendency having been established, international application PCT/AU2007/000095 again stands ABANDONED with respect to the national stage in the United States.

This application is being returned to Technology Center 3749 for further processing.

/George Dombroske/
George Dombroske
PCT Legal Examiner
Office of PCT Legal Administration
Tel: (571) 272-3283
Fax: (571) 273-0459

UNITED STATES PATENT AND TRADEMARK OFFICE

Commissioner for Patents
United States Patent and Trademark Office
P.O. Box 1450
Alexandria, VA 22313-1450
www.uspto.gov

Ward and Smith, P.A.
1001 College Court
P.O. Box 867
New Bern, NC 28563-0867

MAILED

MAR 23 2009

OFFICE OF PETITIONS

In re Application of	:	
Elizabeth Hatfield et al.	:	
Application No. 12/194,699	:	DECISION ON PETITION
Filed: August 20, 2008	:	TO WITHDRAW
Attorney Docket No. ROC920080330US1	:	FROM RECORD

This is a decision on the Request to Withdraw as attorney or agent of record under 37 C.F.R. § 1.36(b), filed January 23, 2009.

The request is **moot because a revocation of power of attorney has been filed**.

A review of the file record indicates that the power of attorney to E. Eric Mills and all attorneys/agents associated with customer number 74342 have been revoked by the assignee of the patent application on March 20, 2009. Accordingly, the request to withdraw under 37 C.F.R. § 1.36(b) is moot.

All future communications from the Office will be directed to the below-listed address until otherwise notified by applicant.

Telephone inquires concerning this decision should be directed to Kimberly Inabinet at 571-272- 4618.

Kimberly Inabinet
Petitions Examiner
Office of Petitions

cc: IBM-Rochester c/o Toler Law Group
8500 Bluffstone Cove, Suite A201
Austin, TX 78759

UNITED STATES PATENT AND TRADEMARK OFFICE

UNITED STATES DEPARTMENT OF COMMERCE
United States Patent and Trademark Office
Address: COMMISSIONER FOR PATENTS
P.O. Box 1450
Alexandria, Virginia 22313-1450
www.uspto.gov

APPLICATION NUMBER	FILING OR 371(C) DATE	FIRST NAMED APPLICANT	ATTY. DOCKET NO./TITLE
12/194,699	08/20/2008	Elizabeth Hatfield	ROC920080330US1 (IBM 54)

CONFIRMATION NO. 7101

POWER OF ATTORNEY NOTICE

OC000000035120212

74342
WARD AND SMITH, P.A.
1001 COLLEGE COURT
P.O. BOX 867
NEW BERN, NC 28563-0867

Date Mailed: 03/23/2009

NOTICE REGARDING CHANGE OF POWER OF ATTORNEY

This is in response to the Power of Attorney filed 03/20/2009.

- The Power of Attorney to you in this application has been revoked by the assignee who has intervened as provided by 37 CFR 3.71. Future correspondence will be mailed to the new address of record(37 CFR 1.33).

/kainabinet/

Office of Data Management, Application Assistance Unit (571) 272-4000, or (571) 272-4200, or 1-888-786-0101

UNITED STATES PATENT AND TRADEMARK OFFICE

UNITED STATES DEPARTMENT OF COMMERCE
United States Patent and Trademark Office
Address: COMMISSIONER FOR PATENTS
P.O. Box 1450
Alexandria, Virginia 22313-1450
www.uspto.gov

APPLICATION NO.	FILING DATE	FIRST NAMED INVENTOR	ATTORNEY DOCKET NO.	CONFIRMATION NO.
12/194,742	08/20/2008	KENNETH A. SCEA	1773.007	7165

81628 7590 10/21/2008
Saidman DesignLaw Group
8601 Georgia Avenue
Suite 603
Silver Spring, MD 20910

EXAMINER
MARKOFF, ALEXANDER

ART UNIT	PAPER NUMBER
1792	

MAIL DATE	DELIVERY MODE
10/21/2008	PAPER

Please find below and/or attached an Office communication concerning this application or proceeding.

The time period for reply, if any, is set in the attached communication.

UNITED STATES PATENT AND TRADEMARK OFFICE

Commissioner for Patents
United States Patent and Trademark Office
P.O. Box 1450
Alexandria, VA 22313-1450
www.uspto.gov

CST

10/21/08

In re application of
Kenneth A. Scea et al
Serial No. 12/194,742
Filed: August 20, 2008
For: SPRING ACTUATED SLOTTED DIMM CONTACT CLEANING DEVICE

DECISION ON PETITION TO MAKE SPECIAL

This is a decision on the petition filed on August 20, 2008 to make the above-identified application special under the accelerated examination program.

The petition to make the application special is **DISMISSED.**

REGULATION AND PRACTICE

A grantable petition to make special under 37 C.F.R. § 1.102(d) and pursuant to the "Change to Practice for Petitions in Patent Applications to Make Special and for Accelerated Examination" published in the Federal Register on June 26, 2006 (71 Fed. Reg. 36323), must satisfy the following conditions:

I. Conditions Regarding the Application:

1. the application must be a non-reissue utility or design application filed under 37 CFR 1.111(a);
2. the application, the petition and the required fees must be filed electronically using the USPTO's electronic filing system (EFS), or EFS-web; if not filed electronically, a statement asserting that EFS and EFS-web were not available during the normal business hours;
3. at the time of filing, the application must be complete under 37 CFR 1.51 and in condition for examination;
4. the application must contain three or fewer independent claims and twenty or fewer total claims and the claims must be directed to a single invention.

II. Conditions Regarding the Petition:

The petition must:

1. be filed with the application;

2. include a statement that applicant agrees not to separately argue the patentability of any dependent claim during any appeal in the application;

3. include a statement that applicant agrees to make an election without traverse in a telephone interview;

4. include a statement that applicant agrees to conduct such an interview when requested by the examiner;

5. include a statement, made based on a good faith belief, that a preexamination search in compliance with the following requirements, was conducted, including an identification of the field of search by United States class and subclass, where applicable, and for database searches, the search logic or chemical structure or sequence used as a query, the name of the file(s) searched and the database service, and the date of the search.

The preexamination search must:

5.1 involve U.S. patents and patent application publications, foreign patent documents, and non-patent literature, unless the applicant can justify with reasonable certainty that no references more pertinent than those already identified are likely to be found in the eliminated sources and includes such a justification with this statement;

5.2. be directed to the claimed invention and encompass all of the features of the claims, giving the claims the broadest reasonable interpretation;

5.3. encompass the disclosed features that may be claimed.

6. must provide in support of the petition an accelerated examination support document.

An accelerated examination support document must include:

6.1. an information disclosure statement (IDS) in compliance with 37 CFR 1.98 citing each reference deemed most closely related to the subject matter of each of the claims;

6.2. an identification of all the limitations in the claims that are disclosed by the reference specifying where the limitation is disclosed in the cited reference;

6.3. a detailed explanation of how each of the claims are patentable over the references cited with particularity required by 37 CFR 1.111(b) and (c);

6.4. a concise statement of the utility of the invention as defined in each of the independent claims (unless the application is a design application);

6.5. a showing of where each limitation of the claims finds support under 35 USC 112, first paragraph, in the written description of the specification. If applicable, the showing must also identify: (1) each means- (or step) plus-function claim element that invokes consideration under 35 USC 112, sixth paragraph; and (2) the structure, material, or acts in the specification that corresponds to each means- (or step) plus-function claim element that invokes consideration under 35 USC 112, sixth paragraph; if the application claims the benefit of one or more applications under title 35, United States Code, the showing must also include where each limitation of the claims finds support under 35 USC 112, first paragraph, in each such application in which such supports exists;

6.6. an identification of any cited references that may be disqualified under 35 USC 103(c).

REVIEW OF FACTS

The conditions regarding the application (section I, subsections 1-4) discussed above are considered to have been met. Additionally, the conditions regarding the petition, section II, subsections 1-4 and 6, are considered to have been met. However, the petition fails to comply with condition II, subsection 5.

It appears that the search is incomplete. Note that a search in Class 134/subclasses 26 and 32 and Class 369, subclass 72 is also required.

Therefore, the petition fails to meet the required conditions to be accorded special status under the accelerated examination procedure.

DECISION

For the above-stated reasons, the petition is dismissed. The application will therefore be taken up by the examiner in its regular turn.

Petitioner is given a single opportunity to perfect the petition. Any request for reconsideration of this decision must be submitted within 1 (one) month or 30 (thirty) days, whichever is longer, (no extension of time under 37 CFR 1.136(a)) from the date of this decision in order to be considered timely. Any request for reconsideration must address the deficiencies indicated above.

Petitioner is reminded that, upon granting of the special status of the application on request for reconsideration, the application will be processed expeditiously. However, due to the dismissal of the instant petition, examination may not be completed within twelve months of the filing date of the application.

Any inquiry regarding this decision should be directed to Christine Tierney, Quality Assurance Specialist, at (571) 272-1055.

/Christine Tierney/

Christine Tierney
Quality Assurance Specialist
Technology Center 1700

UNITED STATES PATENT AND TRADEMARK OFFICE

UNITED STATES DEPARTMENT OF COMMERCE
United States Patent and Trademark Office
Address: COMMISSIONER FOR PATENTS
P.O. Box 1450
Alexandria, Virginia 22313-1450
www.uspto.gov

APPLICATION NO.	FILING DATE	FIRST NAMED INVENTOR	ATTORNEY DOCKET NO.	CONFIRMATION NO.
12/194,742	08/20/2008	KENNETH A. SCEA	1773.007	7165

81628 7590 12/12/2008
Saidman DesignLaw Group
8601 Georgia Avenue
Suite 603
Silver Spring, MD 20910

EXAMINER
MARKOFF, ALEXANDER

ART UNIT	PAPER NUMBER
1792	

MAIL DATE	DELIVERY MODE
12/12/2008	PAPER

Please find below and/or attached an Office communication concerning this application or proceeding.

The time period for reply, if any, is set in the attached communication.

UNITED STATES PATENT AND TRADEMARK OFFICE

Commissioner for Patents
United States Patent and Trademark Office
P.O. Box 1450
Alexandria, VA 22313-1450
www.uspto.gov

CST

12/12/08

In re application of Kenneth A. Scea et al Serial No. 12/194,742 Filed: August 20, 2008 For: SPRING ACTUATED SLOTTED DIMM CONTACT CLEANING DEVICE	DECISION ON PETITION TO MAKE SPECIAL

This is a decision on the Request for Reconsideration of Petition to Make Special under the Accelerated Examination Program filed on November 21, 2008 to make the above-identified application special.

The petition to make the application special is **GRANTED.**

The application is eligible for accelerated examination and the petition complies with the conditions for granting the application special status pursuant to the "Change to Practice for Petitions in Patent Applications to Make Special and for Accelerated Examination" published June 26, 2006, in the Federal Register. (71 Fed. Reg. 36323).

The prosecution of the instant application will be conducted expeditiously according to the following guidelines.

1. The application will be docketed to an examiner and taken up for action within two weeks of the date of this decision.

2. Restriction Practice:
   If the examiner determines that the claims are not directed to a single invention, a telephone request to elect one single invention will be made pursuant to MPEP 812.01. As a prerequisite to the grant of this petition, the applicant has agreed to make an oral election, by telephone, without traverse. If the applicant refuses to make an election without traverse, or the examiner cannot reach the applicant after a reasonable effort, the examiner will treat the first claimed invention (invention defined by claim 1) as having being constructively elected without traverse for examination.

3. Office action:
   If it is determined that, after appropriate consultation, there is a potential rejection or any other issue to be addressed, the examiner will telephone the applicant and arrange an interview to discuss and resolve the issue. An Office action, other than a Notice of Allowance and Fee(s) Due (Notice of Allowance), will not be issued unless either: 1) an interview was conducted but did not result in agreed to action that places the application in condition for allowance, or, 2) a determination is made that an interview would be unlikely to result in the application being placed in condition for allowance, and 3) an internal conference has been held to review any rejection of any claim.

4. Time for Reply:
   An Office action other than a Notice of Allowance or a final Office action will set a shortened statutory period of one month or thirty days, whichever is longer, for reply with no extension of time available under 37 CFR 1.136(a). Failure to timely file a reply within this non-extendible period for reply will result in the abandonment of the application.

5. Reply by Applicant:
   A timely reply to an Office action other than the Notice of Allowance must be submitted electronically via EFS or EFS-web and limited to addressing the rejections, objections and requirement made. Any amendment that attempts to: 1) add claims which would result in more than three pending independent claims or more than twenty pending total claims; 2) present claims not encompassed by the pre-examination search or an updated accelerated examination support document; or 3) present claims that are directed a non-elected invention or an invention other than that previously claimed and examined in the application, will be treated as not fully responsive and will not be entered.

   For any amendment to the claims (including any new claim) that is not encompassed by the accelerated examination support document, applicant must provide an updated accelerated examination support document that encompasses the amended or new claims at the time of filing of the amendment.

   To proceed expeditiously with the examination, it is recommended that a reply with amendments made to any claim or with any new claim being added be accompanied by an updated accelerated examination support document or a statement explaining how the amended or new claim is supported by the original accelerated examination support document.

6. Information Disclosure Statement (IDS):
   Any IDS filed during prosecution must be submitted electronically via EFS or EFS-web, accompanied by an updated accelerated examination support document, and be in compliance with 37 CFR 1.97 and 1.98.

7. Post-Allowance Processing:
   To expedite processing of the allowed application into a patent, the applicant must: 1) pay the required fees within one month of the date of the Notice of Allowance, and 2) not file any post allowance papers not required by the Office. In no event may the issue fee be paid and accepted later than three months from the date of the Notice of Allowance.

8. After-Final and Appeal Procedures:
   To expedite prosecution, after receiving the final Office action, applicant must: 1) promptly file a notice of appeal, an appeal brief and appeal fees; and 2) not request a pre-appeal brief conference.

   Any amendment, affidavit or other evidence filed after final Office action must comply with applicable rules and the requirements outlined in numbered paragraphs 5 and 6 above.

   On appeal, the application will proceed according to normal appeal procedures. After appeal, the application will again be treated special.

9. Proceedings Outside the Normal Examination Process:
   If the application becomes involved in a proceeding that is outside the normal examination process (e.g., a secrecy order, national security review, interference proceeding, petitions under 37 CFR 1.181, 182 or 183), the application will be treated special before and after such proceeding.

10. Final Disposition:
    The twelve month goal of this accelerated examination procedure ends with a final disposition. The mailing of a final Office action, a Notice of Allowance, the filing of a Notice of Appeal, or the filing of a Request for Continued Examination (RCE) is the final disposition.

If, during prosecution, a paper is not filed electronically using EFS-web, a reply is filed but is not fully responsive, the application is involved in an appeal, or a proceeding outside normal examination process, the application will still be examined expeditiously, however, the final disposition may occur more than twelve months from the filing of the application.

Any inquiry regarding this decision should be directed to Christine Tierney, Quality Assurance Specialist, at (571) 272-1055.

/Christine Tierney/

Christine Tierney
Quality Assurance Specialist
Technology Center 1700

UNITED STATES PATENT AND TRADEMARK OFFICE

Commissioner for Patents
United States Patent and Trademark Office
P.O. Box 1450
Alexandria, VA 22313-1450
www.uspto.gov

COPY MAILED

JUL 16 2009

OFFICE OF PETITIONS

SAIDMAN DESIGNLAW GROUP
8601 GEORGIA AVENUE, SUITE 603
SILVER SPRING, MD 20910

In re Application of	:	
Kenneth A. SCEA, et al.	:	
Application No. 12/194,742	:	DECISION ON PETITION TO
Filed: August 20, 2008	:	WITHDRAW FROM RECORD
Attorney Docket No. **1773.007**	:	

This is a decision on the Request to Withdraw as attorney or agent of record under 37 C.F.R. § 1.36(b), filed April 21, 2009.

The request is **APPROVED**.

A grantable request to withdraw as attorney/agent of record must be signed by every attorney/agent seeking to withdraw or contain a clear indication that one attorney is signing on behalf of another/others.

The request was signed by Terasa M. Arroyo on behalf of all attorneys of record. Terasa M. Arroyo has been withdrawn as attorney or agent of record; all other attorneys remain of record.

The correspondence address of record remains unchanged. The application has issued into patent no 7,544,252 on June 9, 2009.

Telephone inquiries concerning this decision should be directed to the undersigned at 571-272-7253.

/Monica A. Graves/
Petitions Examiner, Office of Petitions

UNITED STATES PATENT AND TRADEMARK OFFICE

Commissioner for Patents
United States Patent and Trademark Office
P.O. Box 1450
Alexandria, VA 22313-1450
www.uspto.gov

OBLON, SPIVAK, MCCLELLAND MAIER & NEUSTADT, L.L.P.
1940 DUKE STREET
ALEXANDRIA VA 22314

MAILED
APR 15 2010
OFFICE OF PETITIONS

In re Application of	:	
Zoran Stejic	:	
Application Number: 12/194795	:	NOTICE
Filing or 371(c) Date: 08/20/2008	:	
Attorney Docket Number: 330396US28	:	

This is a notice regarding your request for acceptance of a fee deficiency submission under 37 CFR 1.28 filed on February 5, 2010.

The Office no longer investigates or rejects original or reissue patent under 37 CFR 1.56. **1098 Off. Gaz. Pat. Office 502 (January 3, 1989)**. Therefore, nothing in this Notice is intended to imply that an investigation was done.

Your fee deficiency submission under 37 CFR 1.28 is hereby **ACCEPTED**.

This application is no longer entitled to small entity status. Accordingly, all future fees paid in this application must be paid at the large entity rate.

Inquiries related to this communication should be directed to the undersigned at (571) 272-3231.

D Wood
Douglas Wood
Attorney
Office of Petitions

UNITED STATES PATENT AND TRADEMARK OFFICE

UNITED STATES DEPARTMENT OF COMMERCE
United States Patent and Trademark Office
Address: COMMISSIONER FOR PATENTS
P.O. Box 1450
Alexandria, Virginia 22313-1450
www.uspto.gov

APPLICATION NO.	FILING DATE	FIRST NAMED INVENTOR	ATTORNEY DOCKET NO.	CONFIRMATION NO.
12/194,850	08/20/2008	Yoshiyuki Murao	MNL-2018-2083	7389

7590 12/30/2009
NIXON & VANDERHYE, PC
901 NORTH GLEBE ROAD, 11TH FLOOR
ARLINGTON, VA 22203

EXAMINER

ART UNIT	PAPER NUMBER
3748	

MAIL DATE	DELIVERY MODE
12/30/2009	PAPER

DECISION GRANTING PETITION UNDER 37 CFR 1.138(d)

The declaration of express abandonment is recognized

This is in response to the petition under 37 CFR 1.138(d), requesting for a refund of any previously paid search fee and excess claims fee in the above-identified application.

The petition is granted.

The express abandonment is recognized. Any previously paid search fee and excess claims fee are hereby refunded.

Telephone inquiries should be directed to the Office of Data Management at (571) 272-4200.

Nimi Farmer

Patent Publication Branch
Office of Data Management

Refund Ref:
12/31/2009 [illegible]

Credit Card Refund Total: [illegible]

[illegible]

Adjustment date: 12/31/2009 NFARMER
08/21/2008 INTEFSW 00010205 12194850
02 FC:1111 -510.00 CP

FORM PET651G (Rev. 08/07)

UNITED STATES PATENT AND TRADEMARK OFFICE

Commissioner for Patents
United States Patent and Trademark Office
P.O. Box 1450
Alexandria, VA 22313-1450
www.uspto.gov

JACKSON WALKER, L.L.P.
112 E. PECAN, SUITE 2400
SAN ANTONIO, TX 78205

MAILED

JUL 13 2009

OFFICE OF PETITIONS

In re Application of :
Eric Clamp :
Application No. 12/194,875 :
Filed: August 20, 2008 :
Attorney Docket No. P-131240.0(UTI) :

ON PETITION

This is a decision on the petition under 37 CFR 1.137(b), filed May 29, 2009 to revive the above-identified application.

The petition is **GRANTED.**

The above-identified application became abandoned for failure to reply in a timely manner to the Notice To File Missing Parts of Nonprovisional Application (Notice) mailed August 29, 2008. The Notice set a period for reply of two (2) months from the mail date of the Notice. No extension of time under the provisions of 37 CFR 1.136(a) was obtained. Accordingly, the above-identified application became abandoned on October 30, 2008.

Telephone inquiries concerning this decision should be directed to Irvin Dingle at (571) 272-3210.

This matter is being referred to the Office of Patent Application Processing.

Irvin Dingle
Petitions Examiner
Office of Petitions

UNITED STATES PATENT AND TRADEMARK OFFICE

Commissioner for Patents
United States Patent and Trademark Office
P.O. Box 1450
Alexandria, VA 22313-1450
www.uspto.gov

MCANDREWS HELD & MALLOY, LTD
500 WEST MADISON STREET
SUITE 3400
CHICAGO IL 60661

COPY MAILED

APR 27 2009

OFFICE OF PETITIONS

In re Application of	:	
Naomi Hall	:	DECISION GRANTING STATUS
Application No. 12/194,916	:	UNDER 37 CFR 1.47(b)
Filed: August 20, 2008	:	
Attorney Docket No. 19961US01	:	

This decision is mailed in response to the petition under 37 CFR 1.47(b), filed March 30, 2009 and supplemented on April 1, 2009. In addition, this decision addresses the petition under 37 CFR 1.183, filed April 1, 2009.

The petition under 37 CFR 1.47(b) is **GRANTED.**

The petition under 37 CFR 1.183 is **DISMISSED** as inappropriate.

Petitioner has shown that the non-signing inventor, Naomi Hall, has constructively refused to join in the filing of the above-identified application.

The application and papers have been reviewed and found in compliance with 37 CFR 1.47(b). This application is hereby accorded Rule 1.47(b) status.

As provided in 37 CFR 1.47(c), this Office will forward notice of this application's filing to the non-signing inventor at the address given in the petition. Notice of the filing of this application will also be published in the Official Gazette.

The current Rule 47 petition fee is $200.00. Petitioner paid $130.00 with the present petition. Pursuant to petitioner's authorization, deposit account no. 13-0017 will be charged the $70.00 balance due.

It is noted that petitioner paid a $130.00 fee and filed a paper captioned, "PETITION UNDER 37 CFR 1.183," on April 1, 2009. The purpose of the April 1, 2009 correspondence was to add Exhibit F to the petition filed on March 30, 2009. Exhibit F had been omitted from the March 30, 2009 filing.

A petition under 37 CFR 1.183 is unnecessary and is dismissed as inappropriate because the April 1, 2009 correspondence is viewed as a supplemental response. An extension of time under 37 CFR 1.136 is not necessary when submitting a supplemental reply to an Office action if a complete first reply was timely filed in reply to the Office action. While the March 30, 2009 filing lacked an Exhibit F, it was a substantially complete reply to the August 29, 2008 Notice to File Missing Parts of Nonprovisional Application. The March 30, 2009 Rule 47 petition would have been treated on the merits and a decision refusing Rule 47 status would have been mailed had the April 1, 2009 supplement not been received prior to the undersigned addressing the March 30, 2009 Rule 47 petition. A two month period for reconsideration would have been set in the decision refusing status and the April 1, 2009 filing would have been considered in a subsequent decision on petition. As the April 1, 2009 correspondence is viewed as a supplemental response, it is unnecessary to waive the rules and permit petitioner to file a reply after the expiration of the maximum extendable period for response. The $130.00 petition fee will be credited to petitioner's deposit account. For future reference, the Rule 183 petition fee is currently $400.00.

This application is being referred to the Office of Patent Application Processing for further pre-examination processing.

Telephone inquiries regarding this decision should be directed to the undersigned at (571) 272-3230.

Shirene Willis Brantley

Shirene Willis Brantley
Senior Petitions Attorney
Office of Petitions

UNITED STATES PATENT AND TRADEMARK OFFICE

Commissioner for Patents
United States Patent and Trademark Office
P.O. Box 1450
Alexandria, VA 22313-1450
www.uspto.gov

NAOMI HALL
16 SURREY PLACE
KAREELA, NSW,2232
AUSTRALIA

COPY MAILED

APR 27 2009

OFFICE OF PETITIONS

In re Application of	:	
Naomi Hall	:	
Application No. 12/194,916	:	LETTER
Filed: August 20, 2008	:	
Attorney Docket No. 19961US01	:	

Dear Ms. Hall:

You are named as the sole inventor in the above-identified United States patent application, filed under the provisions of 35 U.S.C. 116 (United States Code), and 37 CFR 1.47(b), Rules of Practice in Patent Cases. Should a patent be granted on the application you will be designated therein as the sole inventor.

As a named inventor you are entitled to inspect any paper in the file wrapper of the application, order copies of all or any part thereof (at a prepaid cost per 37 CFR 1.19) or make your position of record in the application. Alternatively, you may arrange to do any of the preceding through a registered patent attorney or agent presenting written authorization from you. If you care to join the application, counsel of record (see below) would presumably assist you. Joining the application would entail the filing of an appropriate oath or declaration by you pursuant to 37 CFR 1.63.

Telephone inquiries regarding this communication should be directed to the undersigned at (571) 272-3230. Requests for information regarding your application should be directed to the File Information Unit at (703) 308-2733. Information regarding how to pay for and order a copy of the application, or a specific paper in the application, should be directed to the Certification Division at (571) 272-3150 or 1 (800) 972-6382 (outside the Washington, DC area).

Shirene Willis Brantley

Shirene Willis Brantley
Senior Petitions Attorney
Office of Petitions

Attorneys of record: MCANDREWS HELD & MALLOY, LTD
500 WEST MADISON STREET
SUITE 3400
CHICAGO IL 60661

UNITED STATES PATENT AND TRADEMARK OFFICE

Commissioner for Patents
United States Patent and Trademark Office
P.O. Box 1450
Alexandria, VA 22313-1450
www.uspto.gov

MAILED

APR 24 2009

OFFICE OF PETITIONS

KNOBBE MARTENS OLSON & BEAR LLP
2040 MAIN STREET
FOURTEENTH FLOOR
IRVINE CA 92614

In re Application of	:	
Wortzman, et al.	:	
Application No. 12/194,934	:	DECISION ACCORDING STATUS
Filed: November 7, 2008	:	UNDER 37 CFR 1.47(a)
Attorney Docket No. CC-5250	:	

This is in response to the petition under 37 CFR 1.47(a), filed April 1, 2009.

The petition under 37 CFR 1.47(a) is **GRANTED**.

Applicants have demonstrated that joint inventor Kane has refused to sign the declaration after having been presented with the application papers. Specifically, applicants have included a copy of an e-mail from Kane's attorney, setting forth Kane's present refusal to sign.

The above-identified application and papers have been reviewed and found to be in compliance with 37 CFR 1.47(a). Accordingly, the above-identified application is hereby accorded Rule 1.47(a) status.

As provided in 37 CFR 1.47(c), this Office will forward notice of this application's filing to the non-signing inventor at the last known address provided on the declaration. Notice of the filing of this application will also be published in the Official Gazette.

The application is being forwarded to the Office of Patent Application Processing for pre-examination processing.

Telephone inquiries related to this decision may be directed to the undersigned at (571)272-3207.

Cliff Congo
Petitions Attorney
Office of Petitions

UNITED STATES PATENT AND TRADEMARK OFFICE

Commissioner for Patents
United States Patent and Trademark Office
P.O. Box 1450
Alexandria, VA 22313-1450
www.uspto.gov

MICHAEL KANE
115 E 67TH ST
SUITE 2D
NEW YORK NY 10065

MAILED

APR 24 2009

OFFICE OF PETITIONS

In re Application of
Wortzman, et al.
Application No. 12/194,934
Filed: August 20, 2008
Title: Method of Applying an Injectable Filler

LETTER

Dear Mr. Kane:

You are named as a joint inventor in the above-identified United States patent application filed under the provisions of 35 USC 116 (United States Code) and 37 CFR 1.47(a), Rules of Practice in Patent Cases. Should a patent be granted on the application you will be designated therein as a joint inventor.

As a joint inventor, you are entitled to inspect any paper in the file wrapper of the application, order copies of all or any part thereof (at a prepaid cost per 37 CFR 1.19) or make your position of record in the application. Alternatively, you may arrange to do any of the preceding through a registered patent attorney or agent presenting written authorization from you. If you care to join the application, agent of record would presumably assist you. Joining in the application would entail the filing of an appropriate oath or declaration by you pursuant to 37 CFR 1.63.

Telephone inquiries regarding this communication should be directed to Petitions Attorney Cliff Congo at (571)272-3207. Requests for information regarding your application should be directed to the File Information Unit at (703) 308-2733. Information regarding how to pay for and order a copy of the application, or a specific paper in the application, should be directed to the Certification Division at (703) 308-9726 or 1-800-972-6382 (outside the Washington D.C. area).

Cliff Congo
Petitions Attorney
Office of Petitions

UNITED STATES PATENT AND TRADEMARK OFFICE

MAILED

OCT 08 2008

Technology Center 2100

Commissioner for Patents
United States Patent and Trademark Office
P.O. Box 1450
Alexandria, VA 22313-1450
www.uspto.gov

CROWELL & MORING LLP
INTELLECTUAL PROPERTY GROUP
P.O. BOX 14300
WASHINGTON DC 20044-4300

In re Application of: YOSHIMURA et al.
Application No. 12/194,948
Filed: August 20, 2008
For: EMBEDDED CONTROLLERS AND DEVELOPMENT TOOL FOR EMBEDDED CONTROLLERS

DECISION ON REQUEST TO PARTICIPATE IN PATENT PROSECUTION HIGHWAY PILOT PROGRAM AND PETITION TO MAKE SPECIAL UNDER 37 CFR 1.102(d)

This is a decision on the request to participate in the Patent Prosecution Highway (PPH) pilot program and the petition under 37 CFR 1.102(d), filed September 3, 2008, to make the above-identified application special.

The petition is **GRANTED.**

A grantable request to participate in the PPH pilot program and petition to make special require:

(1) The U.S. application must validly claim priority under 35 U.S.C. 119(a) to one or more applications filed in the JPO;

(2) Applicant must submit a copy of the allowable/patentable claim(s) from the JPO application(s) along with an English translation thereof and a statement that the English translation is accurate;

(3) All the claims in the U.S. application must sufficiently correspond or be amended to sufficiently correspond to the allowable/patentable claim(s) in the JPO application(s);

(4) Examination of the U.S. application has not begun;

(5) Applicant must submit a copy of all the office actions from each of the JPO application(s) containing the allowable/patentable claim(s) along with an English translation thereof and a statement that the English translation is accurate;

(6) Applicant must submit an IDS listing the documents cited by the JPO examiner in

the JPO office action along with copies of documents except U.S. patents or U.S. patent application publications; and

(7) The required petition fee under 37 CFR 1.17(h).

The request to participate in the PPH pilot program and petition are found to comply with the above requirements. Accordingly, the above-identified application has been accorded "special" status.

Telephone inquiries concerning this decision should be directed to Mano Padmanabhan at 571-272-4210.

All other inquiries concerning the examination or status of the application is accessible in the PAIR system at http://www.uspto.gov/ebc/index.html.

The application is being forwarded to the examiner for action on the merits commensurate with this decision.

/Mano Padmanabhan/

Mano Padmanabhan
Quality Assurance Specialist, Technology Center 2100, Workgroup 2180
571-272-4210

UNITED STATES PATENT AND TRADEMARK OFFICE

Commissioner for Patents
United States Patent and Trademark Office
P.O. Box 1450
Alexandria, VA 22313-1450
www.uspto.gov

ST. ONGE STEWARD JOHNSTON & REENS, LLC
986 BEDFORD STREET
STAMFORD CT 06905-5619

COPY MAILED

SEP 0 2 2009

OFFICE OF PETITIONS

In re Application of	:	
Dubravka Hrsak, et al.	:	
Application No. 12/194,995	:	DECISION GRANTING PETITION
Filed: August 20, 2008	:	UNDER 37 CFR 1.313(c)(2)
Attorney Docket No. 05086-P0001A	:	

This is a decision on the petition under 37 CFR 1.313(c)(2), filed September 1, 2009, to withdraw the above-identified application from issue after payment of the issue fee.

The petition is **GRANTED**.

The above-identified application is withdrawn from issue for consideration of a submission under 37 CFR 1.114 (request for continued examination). *See* 37 CFR 1.313(c)(2).

Petitioner is advised that the issue fee paid on August 3, 2009 cannot be refunded. If, however, this application is again allowed, petitioner may request that it be applied towards the issue fee required by the new Notice of Allowance.[1]

Telephone inquiries regarding this decision should be directed to undersigned at (571) 272-1642. All other inquiries regarding the examination or status of this application should be directed to the Technology Center.

This application is being referred to Technology Center AU 1797 for processing of the request for continued examination under 37 CFR 1.114 and for consideration of the concurrently filed information disclosure statement.

/AMW/
April M. Wise
Petitions Examiner
Office of Petitions

[1] *The request to apply the issue fee to the new Notice may be satisfied by completing and returning the new Part B – Fee(s) Transmittal Form (along with any balance due at the time of submission). Petitioner is advised that the Issue Fee Transmittal Form* ***must*** *be completed and timely submitted to avoid abandonment of the application.*

UNITED STATES PATENT AND TRADEMARK OFFICE

Commissioner for Patents
United States Patent and Trademark Office
P.O. Box 1450
Alexandria, VA 22313-1450
www.uspto.gov

YOUNG & BASILE, P.C.
3001 WEST BIG BEAVER ROAD
SUITE 624
TROY MI 48084

COPY MAILED

MAR 27 2009

OFFICE OF PETITIONS

In re Application of
Bai, et al.
Application No. 12/195,142
Filed: 20 August, 2008
Attorney Docket No. GSE-101-B

DECISION ON PETITION

This is a decision on the petition filed on 2 February, 2009, under 37 C.F.R. §1.47.

The petition as considered under 37 C.F.R. §1.47(a) is **DISMISSED**.

Rule 47 applicant is given TWO (2) MONTHS from the mailing date of this decision to reply, correcting the below-noted deficiencies. Any reply should be entitled "Request for Reconsideration of Petition Under 37 C.F.R. §1.47(a)," and should only address the deficiencies noted below, except that the reply may include an oath or declaration executed by the non-signing inventor. **FAILURE TO RESPOND WILL RESULT IN ABANDONMENT OF THE APPLICATION.** Any extensions of time will be governed by 37 C.F.R. §1.136(a).

This is **not** a final agency action within the meaning of 5 U.S.C. §704.

A grantable petition under 37 C.F.R. §1.47(a) requires: (1) petition and fee; (2) proof that the non-signing inventor cannot be reached or refuses to sign the oath or declaration after having been presented with the application papers (specification: description, claims and drawings); (3) an acceptable oath or declaration in compliance with 35 U.S.C. §§ 115 and 116; and (4) a statement of the last known address of the non-signing inventor(s)—with diligence in the effort to ascertain the validity of the address set forth as the reasonably believed to be last known/current/valid address.

Petitioner does not seem to have worked through the requirements of the petition, as set forth above, in satisfaction of those requirements. And, in particular, Petitioner has not as of this writing satisfied the showing of, *inter alia*, of a diligent/search by **Petitioner** for a reasonably believed to be last known/valid/current address of the non-signing inventor(s)—and thus the transmittal of the entire application (description, claims, abstract and drawings) to the non-

signing inventor(s) at that address. (*See, generally:* MPEP §409.03, and §409.03(a)—the applicable statute (35 U.S.C.§ 116) requires that a "diligent effort" have been expended in attempting to find or reach the non-signing inventor to ensure transmittal to the non-signing inventors a copy of the entire application (description, claims, abstract, drawings) with a copy of the transmittal letter) to the non-signing inventor(s).) There are no copies of transmittal letters (with translation(s)) in the record. In any future petition in this regard, Petitioner must make these statements herself over her signature and registration number.

Further, Petitioners always are reminded that for transmission by Email of any document to be accepted by the Office, written acknowledgment of receipt and readability will be required.

BACKGROUND

The record indicates:

The instant application was deposited on 20 August, 2008.

Thereafter, on 2 September, 2008, the Office of Patent Application Processing (OPAP) mailed a Notice of Missing Parts (inter alia, oath/declaration, surcharge) and stated therein that a fully executed oath/declaration must be filed, with a reply date absent extension of time on or before 2 October, 2008.

On 2 February, 2009, Petitioner Denise M. Glassmeyer (Reg. No. 31,831) filed, *inter alia*, request and fee for extension of time, a petition pursuant to 37 C.F.R. §1.47, with an oath/declaration executed by co-inventors Bai Hua, Zhengjie Chen, Chongyan Xu, Zhaorul Li, Zigang Zhao, Luyan Jiang, Zongyi Yang, and Jiang Li for themselves and on behalf of non-signing co-inventor Peijie Yang, but unaccompanied by a copy of transmittal letter evidencing that the entire application (description, claims, abstract, drawing(s)) was sent to the non-signing inventor and an insufficient showing by Petitioner of **Petitioner's** efforts to ascertain reasonably believed to be last known addresses of the non-signing inventor(s). There are no copies of transmittal letters (with translation(s)) in the record. (The applicable statute (35 U.S.C.§ 116) requires that a "diligent effort" (i.e., . "a *bona fide* attempt") has been made in attempting to find or reach the non-signing inventor.)

As set forth above, in any renewed petition Petitioner **must** detail and clarify these items.

The availability of applications and application papers online to applicants/practitioners who diligently associate their Customer Number with the respective application(s) now provides an applicant/practitioner on-demand information as to events/transactions in an application. Thus, now if one wishes to know the progress in and/or status of an application or the accuracy of the data therein, one need only look at the file online.

Out of an abundance of caution, Petitioners always are reminded that those registered to practice *and* all others who make representations before the Office must inquire into the underlying facts of representations made to the Office and support averments with the appropriate documentation–since all owe to the Office the continuing duty to disclose.[1]

The instant petition under 37 C.F.R. §1.47(a) is **dismissed**.

Further correspondence with respect to this matter should be addressed as follows:

By mail: Mail Stop PETITIONS
Commissioner for Patents
Post Office Box 1450
Alexandria, VA 22313-1450

By hand: Customer Service Window
Mail Stop Petitions
Randolph Building
401 Dulany Street
Alexandria, VA 22314

By FAX: (571) 273-8300
ATTN: Office of Petitions

[1] See supplement of 17 June, 1999. The Patent and Trademark Office is relying on petitioner's duty of candor and good faith and accepting a statement made by Petitioner. See Changes to Patent Practice and Procedure, 62 Fed. Reg. at 53160 and 53178, 1203 Off. Gaz. Pat. Office at 88 and 103 (responses to comments 64 and 109)(applicant obligated under 37 C.F.R. §10.18 to inquire into the underlying facts and circumstances when providing statements to the Patent and Trademark Office). See specifically, the regulations at 37 C.F.R. §10.18.

Telephone inquiries regarding this decision may be directed to the undersigned at (571) 272-3214—it is noted, however, that all practice before the Office is in writing (see: 37 C.F.R. §1.2[2]) and the proper authority for action on any matter in this regard are the statutes (35 U.S.C.), regulations (37 C.F.R.) and the commentary on policy (MPEP). Therefore, no telephone discussion may be controlling or considered authority for Petitioner's action(s).

/John J. Gillon, Jr./
John J. Gillon, Jr.
Senior Attorney
Office of Petitions

---

[2] The regulations at 37 C.F.R. §1.2 provide:

§1.2 Business to be transacted in writing.

All business with the Patent and Trademark Office should be transacted in writing. The personal attendance of applicants or their attorneys or agents at the Patent and Trademark Office is unnecessary. The action of the Patent and Trademark Office will be based exclusively on the written record in the Office. No attention will be paid to any alleged oral promise, stipulation, or understanding in relation to which there is disagreement or doubt.

UNITED STATES PATENT AND TRADEMARK OFFICE

Commissioner for Patents
United States Patent and Trademark Office
P.O. Box 1450
Alexandria, VA 22313-1450
www.uspto.gov

YOUNG & BASILE, P.C.
3001 WEST BIG BEAVER ROAD
SUITE 624
TROY MI 48084

COPY MAILED

SEP 14 2009

OFFICE OF PETITIONS

In re Application of
Bai, et al.
Application No. 12/195,142
Filed: 20 August, 2008
Attorney Docket No. GSE-101-B

DECISION ON PETITION

This is a decision on the petition filed on 29 June, 2009, under 37 C.F.R. §1.47.

The petition as considered under 37 C.F.R. §1.47(a) is **DISMISSED**.

Rule 47 applicant is given TWO (2) MONTHS from the mailing date of this decision to reply, correcting the below-noted deficiencies. Any reply should be entitled "Request for Reconsideration of Petition Under 37 C.F.R. §1.47(a)," and should only address the deficiencies noted below, except that the reply may include an oath or declaration executed by the non-signing inventor. **FAILURE TO RESPOND WILL RESULT IN ABANDONMENT OF THE APPLICATION.** Any extensions of time will be governed by 37 C.F.R. §1.136(a).

This is **not** a final agency action within the meaning of 5 U.S.C. §704.

A grantable petition under 37 C.F.R. §1.47(a) requires: (1) petition and fee; (2) proof that the non-signing inventor cannot be reached or refuses to sign the oath or declaration after having been presented with the application papers (specification: description, claims and drawings); (3) an acceptable oath or declaration in compliance with 35 U.S.C. §115 and §116; and (4) a statement of the last known address of the non-signing inventor(s)—with diligence in the effort to ascertain the validity of the address set forth as the reasonably believed to be last known/current/valid address.

Petitioner does not seem to have worked through the requirements of the petition, as set forth above, in satisfaction of those requirements. In particular, Petitioner has not as of this writing satisfied the showing of, *inter alia*, the transmittal of the entire application (description, claims, abstract and drawings) to the non-signing inventor(s) at that address. (*See, generally:* MPEP §409.03, and §409.03(a)—the applicable statute (35 U.S.C.§ 116) requires that a "diligent effort"

have been expended in attempting to find or reach the non-signing inventor to ensure transmittal to the non-signing inventors a copy of the entire application (description, claims, abstract, drawings) with a copy of the transmittal letter) to the non-signing inventor(s).)

As previously noted, there are no copies of transmittal letters (with translation(s)) in the record.

Further, Petitioners always are reminded that for transmission by Email of any document to be accepted by the Office, written acknowledgment of receipt and readability will be required.

BACKGROUND

The record indicates:

The instant application was deposited on 20 August, 2008.

Thereafter, on 2 September, 2008, the Office of Patent Application Processing (OPAP) mailed a Notice of Missing Parts (inter alia, oath/declaration, surcharge) and stated therein that a fully executed oath/declaration must be filed, with a reply date absent extension of time on or before 2 October, 2008.

On 2 February, 2009, Petitioner Denise M. Glassmeyer (Reg. No. 31,831) filed, *inter alia*, request and fee for extension of time, a petition pursuant to 37 C.F.R. §1.47, with an oath/declaration executed by co-inventors Bai Hua, Zhengjie Chen, Chongyan Xu, Zhaorul Li, Zigang Zhao, Luyan Jiang, Zongyi Yang, and Jiang Li for themselves and on behalf of non-signing co-inventor Peijie Yang, but unaccompanied by a copy of transmittal letter evidencing that the entire application (description, claims, abstract, drawing(s)) was sent to the non-signing inventor and an insufficient showing by Petitioner of **Petitioner's** efforts to ascertain reasonably believed to be last known addresses of the non-signing inventor(s). There are no copies of transmittal letters (with translation(s)) in the record. (The applicable statute (35 U.S.C.§ 116) requires that a "diligent effort" (i.e., . "a *bona fide* attempt") has been made in attempting to find or reach the non-signing inventor.) The petition was dismissed on 27 March, 2009.

On 29 June, 2009, Petitioner sought reconsideration of petition, but again provided no documentary support/evidence of transmittal (e.g., a copy of a transmittal letter (with translation if in a language other than English) of the entire application (description, claims, abstract, drawings to the non-signing inventor. In the alternative, if it is the position of Petitioner that, in lieu of transmittal by mail or courier, Mr. Wu attempted to deliver the entire application to the non-signing inventor on a given date at a given time and that the non-signing inventor refused to accept that personal delivery, then that specific statement must be made by Mr. Wu over his signature.

As set forth above, in any renewed petition Petitioner **must** detail and clarify these items.

The availability of applications and application papers online to applicants/practitioners who diligently associate their Customer Number with the respective application(s) now provides an applicant/practitioner on-demand information as to events/transactions in an application. Thus, now if one wishes to know the progress in and/or status of an application or the accuracy of the data therein, one need only look at the file online.

Out of an abundance of caution, Petitioners always are reminded that those registered to practice *and* all others who make representations before the Office must inquire into the underlying facts of representations made to the Office and support averments with the appropriate documentation–since all owe to the Office the continuing duty to disclose.[1]

The instant petition under 37 C.F.R. §1.47(a) is **dismissed**.

Further correspondence with respect to this matter should be addressed as follows:

By mail: Mail Stop PETITIONS
Commissioner for Patents
Post Office Box 1450
Alexandria, VA 22313-1450

By hand: Customer Service Window
Mail Stop Petitions
Randolph Building
401 Dulany Street
Alexandria, VA 22314

By FAX: (571) 273-8300
ATTN: Office of Petitions

[1] See supplement of 17 June, 1999. The Patent and Trademark Office is relying on petitioner's duty of candor and good faith and accepting a statement made by Petitioner. See Changes to Patent Practice and Procedure, 62 Fed. Reg. at 53160 and 53178, 1203 Off. Gaz. Pat. Office at 88 and 103 (responses to comments 64 and 109)(applicant obligated under 37 C.F.R. §10.18 to inquire into the underlying facts and circumstances when providing statements to the Patent and Trademark Office). See specifically, the regulations at 37 C.F.R. §10.18.

Telephone inquiries regarding this decision may be directed to the undersigned at (571) 272-3214—it is noted, however, that all practice before the Office is in writing (see: 37 C.F.R. §1.2[2]) and the proper authority for action on any matter in this regard are the statutes (35 U.S.C.), regulations (37 C.F.R.) and the commentary on policy (MPEP). Therefore, no telephone discussion may be controlling or considered authority for Petitioner's action(s).

/John J. Gillon, Jr./
John J. Gillon, Jr.
Senior Attorney
Office of Petitions

---

[2] The regulations at 37 C.F.R. §1.2 provide:

§1.2 Business to be transacted in writing.

All business with the Patent and Trademark Office should be transacted in writing. The personal attendance of applicants or their attorneys or agents at the Patent and Trademark Office is unnecessary. The action of the Patent and Trademark Office will be based exclusively on the written record in the Office. No attention will be paid to any alleged oral promise, stipulation, or understanding in relation to which there is disagreement or doubt.

UNITED STATES PATENT AND TRADEMARK OFFICE

Commissioner for Patents
United States Patent and Trademark Office
P.O. Box 1450
Alexandria, VA 22313-1450
www.uspto.gov

YOUNG & BASILE, P.C.
3001 WEST BIG BEAVER ROAD
SUITE 624
TROY MI 48084

MAILED

MAR 23 2010

OFFICE OF PETITIONS

In re Application of
Bai, et al.
Application No. 12/195,142
Filed: 20 August, 2008
Attorney Docket No. GSE-101-B

DECISION ON PETITION

This is a decision on the petition filed on 22 October, 2009, under 37 C.F.R. §1.47.

The petition as considered under 37 C.F.R. §1.47(a) is **GRANTED**.

A grantable petition under 37 C.F.R. §1.47(a) requires: (1) petition and fee; (2) proof that the non-signing inventor cannot be reached or refuses to sign the oath or declaration after having been presented with the application papers (specification: description, claims and drawings); (3) an acceptable oath or declaration in compliance with 35 U.S.C. §115 and §116; and (4) a statement of the last known address of the non-signing inventor(s)—with diligence in the effort to ascertain the validity of the address set forth as the reasonably believed to be last known/current/valid address.

Petitioners always are reminded that for transmission by Email of any document to be accepted by the Office, written acknowledgment of receipt and readability will be required.

BACKGROUND

The record indicates:

The instant application was deposited on 20 August, 2008.

Thereafter, on 2 September, 2008, the Office of Patent Application Processing (OPAP) mailed a Notice of Missing Parts (inter alia, oath/declaration, surcharge) and stated therein that a fully executed oath/declaration must be filed, with a reply date absent extension of time on or before 2 October, 2008.

On 2 February, 2009, Petitioner Denise M. Glassmeyer (Reg. No. 31,831) filed, *inter alia*, request and fee for extension of time, a petition pursuant to 37 C.F.R. §1.47, with an oath/declaration executed by co-inventors Bai Hua, Zhengjie Chen, Chongyan Xu, Zhaorul Li, Zigang Zhao, Luyan Jiang, Zongyi Yang, and Jiang Li for themselves and on behalf of non-signing co-inventor Peijie Yang, but unaccompanied by a copy of transmittal letter evidencing that the entire application (description, claims, abstract, drawing(s)) was sent to the non-signing inventor and an insufficient showing by Petitioner of Petitioner's efforts to ascertain reasonably believed to be last known addresses of the non-signing inventor(s). There are no copies of transmittal letters (with translation(s)) in the record. (The applicable statute (35 U.S.C.§ 116) requires that a "diligent effort" (i.e., . "a *bona fide* attempt") has been made in attempting to find or reach the non-signing inventor.) The petition was dismissed on 27 March, 2009.

On 29 June, 2009, Petitioner sought reconsideration of petition, but again provided no documentary support/evidence of transmittal (e.g., a copy of a transmittal letter (with translation if in a language other than English) of the entire application (description, claims, abstract, drawings to the non-signing inventor. In the alternative, if it is the position of Petitioner that, in lieu of transmittal by mail or courier, Mr. Wu attempted to deliver the entire application to the non-signing inventor on a given date at a given time and that the non-signing inventor refused to accept that personal delivery, then that specific statement must be made by Mr. Wu over his signature. The petition was dismissed on 14 September, 2009.

On 22 October, 2009, Petitioner presented the petition pursuant to 37 C.F.R. §1.47(a), and in lieu of documentary support for delivery of the entire application to the non-signing inventor (e.g., a copy of a transmittal letter with translation), Petitioner submitted first-person declarations of those persons averred to have been involved in the delivery—John Wu (Mr. Wu) and Zhen Len Li (Ms. Li). In the absence of this supporting documentation, the Office is taking Petitioner Glassmeyer's signed submission of the petition and the statements by Mr. Wu and Ms. Li as a concurrent statement on by Petitioner that she has properly inquired to ascertain the accuracy of that representation consistent with their duty of candor to the Office. (*See*: 37 C.F.R. §1.4, §10.18, MPEP §410. If Petitioner has not made this inquiry, she must do so, and if this inquiry evidences that history of events is not consistent with the statements by Mr. Wu and Ms. Li, Petitioner must immediately so notify the Office. Similarly, the Office is accepting Petitioner's representations in support of their contention of the non-signing inventor's failure to sign/join in the oath/declaration thereafter—thus demonstrating, *inter alia*, the non-signing inventor's constructive refusal to sign. Petitioner so seeks to evidence compliance with the requirements of a grantable petition under 37 C.F.R. §1.47(a): (1) petition and fee; (2) proof that the non-signing inventor cannot be reached or refuses to sign the oath or declaration after having been presented with the application papers (specification: description, claims and drawings); (3) an acceptable oath or declaration in compliance with 35 U.S.C. §§ 115 and 116; and (4) a statement of the last known address of the non-signing inventor(s)—with diligence in the effort to ascertain the validity of the address set forth as the reasonably believed to be last known/current/valid address. (Thus, Petitioner sought to satisfy the requirements pursuant to the Rule and the guidance in the Commentary at MPEP §409.03, and §409.03(a) et seq.)

The availability of applications and application papers online to applicants/practitioners who diligently associate their Customer Number with the respective application(s) now provides an applicant/practitioner on-demand information as to events/transactions in an application. Thus, now if one wishes to know the progress in and/or status of an application or the accuracy of the data therein, one need only look at the file online.

Out of an abundance of caution, Petitioners always are reminded that those registered to practice *and* all others who make representations before the Office must inquire into the underlying facts of representations made to the Office and support averments with the appropriate documentation–since all owe to the Office the continuing duty to disclose.[1]

CONCLUSION

The instant petition under 37 C.F.R. §1.47(a) is **granted** (status is accorded pursuant to 37 C.F.R. §1.47(a).)

As provided in 37 C.F.R. §1.47(c), this Office will forward notice of this application's filing to the non-signing inventors at the addresses given in the petition. Notice of the filing of this application will also be published in the Official Gazette.

The instant application is released to the Office of Patent Application Processing (OPAP) for further processing in due course.

Telephone inquiries regarding this decision may be directed to the undersigned at (571) 272-3214—it is noted, however, that all practice before the Office is in writing (see: 37 C.F.R. §1.2[2]) and the proper authority for action on any matter in this regard are the statutes (35 U.S.C.), regulations (37 C.F.R.) and the commentary on policy (MPEP). Therefore, no telephone discussion may be controlling or considered authority for Petitioner's action(s).

/John J. Gillon, Jr./
John J. Gillon, Jr.
Senior Attorney
Office of Petitions

---

[1] See supplement of 17 June, 1999. The Patent and Trademark Office is relying on petitioner's duty of candor and good faith and accepting a statement made by Petitioner. See Changes to Patent Practice and Procedure, 62 Fed. Reg. at 53160 and 53178, 1203 Off. Gaz. Pat. Office at 88 and 103 (responses to comments 64 and 109)(applicant obligated under 37 C.F.R. §10.18 to inquire into the underlying facts and circumstances when providing statements to the Patent and Trademark Office). See specifically, the regulations at 37 C.F.R. §10.18.

[2] The regulations at 37 C.F.R. §1.2 provide:

§1.2 Business to be transacted in writing.
All business with the Patent and Trademark Office should be transacted in writing. The personal attendance of applicants or their attorneys or agents at the Patent and Trademark Office is unnecessary. The action of the Patent and Trademark Office will be based exclusively on the written record in the Office. No attention will be paid to any alleged oral promise, stipulation, or understanding in relation to which there is disagreement or doubt

UNITED STATES PATENT AND TRADEMARK OFFICE

Commissioner for Patents
United States Patent and Trademark Office
P.O. Box 1450
Alexandria, VA 22313-1450
www.uspto.gov

CHAIRMAN PEIJEI YANG
NINGBO ZHENHAI HAIDE
BIOCHEMISTRY TECHNOLOGY COM. LTD.
301 PING' AN ROAD
BAOSHAN STREET
ZHENHAI DISTRICT
NINGBO CITY
ZHENJZANG PROVINCE
PEOPLES REPUBLIC OF CHINA

MAILED

MAR 23 2010

OFFICE OF PETITIONS

In re Application of	:	
Bai, et al.	:	COMMUNICATION
Application No. 12/195,142	:	
Filed: 20 August, 2008	:	
Attorney Docket No. GSE-101-B	:	

Dear Peijei Yang:

You are named as an inventor in the above-identified United States patent application, filed under the provisions of 35 U.S.C. §116 (United States Code), and 37 C.F.R. §1.47 (Code of Federal Regulations), Rules of Practice in Patent Cases. Should a patent be granted on the application you will be designated therein as an inventor.

As a named inventor you are entitled to inspect any paper in the file wrapper of the application, order copies of all or any part thereof (at a prepaid cost per 37 C.F.R. §1.19) or make your position of record in the application. Alternatively, you may arrange to do any of the preceding through a registered patent attorney or agent presenting written authorization from you. If you care to join the application, counsel of record (see below) would presumably assist you. Joining the application would entail the filing of an appropriate oath or declaration by you pursuant to 37 C.F.R. §1.63.

Should you elect to join in the application, the contact information for Counsel of Record is set forth at the end of this Communication.

Should you seek to identify independent Counsel, you may find the Patent Attorneys/Agents Search engine of assistance (https://oedci.uspto.gov/OEDCI/).

Requests for information regarding your application should be directed to the File Information Unit at (703) 308-2733. Information regarding how to pay for and order a copy of the

application, or a specific paper in the application, should be directed to the Certification Division at (571) 272-3150 or 1 (800) 972-6382 (outside the Washington, DC area).

Telephone inquiries regarding this communication may be directed to the undersigned at (571) 272-3214—it is noted, however, that all practice before the Office is in writing (see: 37 C.F.R. §1.2[1]) and the proper authority for action on any matter in this regard are the statutes (35 U.S.C.), regulations (37 C.F.R.) and the commentary on policy (MPEP). Therefore, no telephone discussion may be controlling or considered authority for Petitioner's action(s) Moreover, the Office can neither advise you nor recommend Counsel in this matter.

/John J. Gillon, Jr./
John J. Gillon, Jr.
Senior Attorney
Office of Petitions

Counsel of Record:
YOUNG & BASILE, P.C.
3001 WEST BIG BEAVER ROAD
SUITE 624
TROY MI 48084

[1] The regulations at 37 C.F.R. §1.2 provide:
§1.2 Business to be transacted in writing.
All business with the Patent and Trademark Office should be transacted in writing. The personal attendance of applicants or their attorneys or agents at the Patent and Trademark Office is unnecessary. The action of the Patent and Trademark Office will be based exclusively on the written record in the Office. No attention will be paid to any alleged oral promise, stipulation, or understanding in relation to which there is disagreement or doubt

UNITED STATES PATENT AND TRADEMARK OFFICE

UNITED STATES DEPARTMENT OF COMMERCE
United States Patent and Trademark Office
Address: COMMISSIONER FOR PATENTS
P.O. Box 1450
Alexandria, Virginia 22313-1450
www.uspto.gov

APPLICATION NO.	FILING DATE	FIRST NAMED INVENTOR	ATTORNEY DOCKET NO.	CONFIRMATION NO.
12/195,156	08/20/2008	Gerald Kreissig	DE20070254US2	7959

77062 7590 01/23/2009
The Law Firm of Andrea Hence Evans, LLC
14625 Baltimore Ave., #853
Laurel, MD 20707

EXAMINER

ART UNIT	PAPER NUMBER
2835	

MAIL DATE	DELIVERY MODE
01/23/2009	PAPER

Please find below and/or attached an Office communication concerning this application or proceeding.

The time period for reply, if any, is set in the attached communication.

UNITED STATES PATENT AND TRADEMARK OFFICE

Commissioner for Patents
United States Patent and Trademark Office
P.O. Box 1450
Alexandria, VA 22313-1450
www.uspto.gov

The Law Firm of Andrea Hence Evans, LLC
14625 Baltimore Ave., #853
Laurel, MD 20707

In re Application of: KRESSIG *et al.* Serial No.: 12/195,156 Filed: August 20, 2008 Title: **FLEXIBLE HEAT SINK INSTALLATION FOR EARLY BLADE BOARD MANUFACTURING**	DECISION ON PETITION TO MAKE SPECIAL FOR NEW APPLICATION UNDER 37 C.F.R. § 1.102 & M.P.E.P. § 708.02

This is a decision on the petition filed on August 20, 2008, to make the above-identified application special for accelerated examination procedure under 37 C.F.R. § 1.102(d).

The petition to make the application special is **DISMISSED**.

REGULATION AND PRACTICE

A grantable petition to make special under 37 C.F.R. § 1.102(d) and pursuant to the "Change to Practice for Petitions in Patent Applications to Make Special and for Accelerated Examination" published in the Federal Register on June 26, 2006 (71 Fed. Reg. 36323), must satisfy the following conditions:

I. Conditions Regarding the Application:

1. the application must be a non-reissue utility or design application filed under 37 CFR 1.111(a);
2. the application, the petition and the required fees must be filed electronically using the USPTO's electronic filing system (EFS), or EFS-web; if not filed electronically, a statement asserting that EFS and EFS-web were not available during the normal business hours.
3. at the time of filing, the application must be complete under 37 CFR 1.51 and in condition for examination;
4. the application must contain three or fewer independent claims and twenty or fewer total claims and the claims must be directed to a single invention.

II. Conditions Regarding the Petition:

The petition must:

1. be filed with the application;

2. include a statement that applicant agrees not to separately argue the patentability of any dependent claim during any appeal in the application;

3. include a statement that applicant agrees to make an election without traverse in a telephone interview.

4. include a statement that applicant agrees to conduct such an interview when requested by the examiner.

5. include a statement, made based on a good faith belief, that a preexamination search in compliance with the following requirements, was conducted, including an identification of the field of search by United States class and subclass, where applicable, and for database searches, the search logic or chemical structure or sequence used as a query, the name of the file(s) searched and the database service, and the date of the search.

The preexamination search must:

5.1 involve U.S. patents and patent application publications, foreign patent documents, and non-patent literature, unless the applicant can justify with reasonable certainty that no references more pertinent than those already identified are likely to be found in the eliminated sources and includes such a justification with this statement;

5.2. be directed to the claimed invention and encompass all of the features of the claims, giving the claims the broadest reasonable expectation;

5.3. encompass the disclosed features that may be claimed.

6. must provide in support of the petition an accelerated examination support document. An accelerated examination support document must include:

6.1. an information disclosure statement (IDS) in compliance with 37 CFR 1.98 citing each reference deemed most closely related to the subject matter of each of the claims;

6.2. an identification of all the limitations in the claims that are disclosed by the reference specifying where the limitation is disclosed in the cited reference;

6.3. a detailed explanation of how each of the claims are patentable over the references cited with particularity required by 37 CFR 1.111(b) and (c);

6.4. a concise statement of the utility of the invention as defined in each of the independent claims (unless the application is a design application);

6.5. a showing of where each limitation of the claims finds support under 35 USC 112, first paragraph, in the written description of the specification. If applicable, the showing must also identify: (1) each means- (or step) plus-function claim element that invokes consideration under 35 UDC 112, sixth paragraph; and (2) the structure, material, or acts in the specification that corresponds to each means- (or step) plus-function claim element that invokes consideration under 35 UDC 112, sixth paragraph; if the application claims the benefit of one or more applications under title 35, United States Code, the showing must also include where each limitation of the claims finds support under 35 USC 112, first paragraph, in each such application in which such supports exists;

6.6. an identification of any cited references that may be disqualified under 35 USC 103(c).

REVIEW OF FACTS

The conditions I.1-4; II. 5.1-5.3, 6, 6.1-6.4 and 6.6, above are considered to have been met. However, the petition fails to comply with conditions section II, subsections 5, 6.2 and 6.5, above. Therefore, the petition fails to meet the required conditions to be accorded special status under the accelerated examination procedure.

Regarding the requirement of section II, subsection 5, the preexamintion search provided appears to be lacking. The following classes and subclasses should be include in the search: 165/80.3, 174/16.3 and 257/706,712. For the above reason, the petition does not meet the requirements of section II, subsection 5, as set forth above.

Regarding the requirements of section II, subsection 6.2, the examination support document must provide an identification of all the limitations in the claims that are disclosed by the reference specifying where the limitation is disclosed in the cited reference. The examination support document provided with the petition appears to be lacking this identification. For example, the examination support document states that "Brezina et al. generally teach a frame for mounting different heat sinks to a closely packed array of data processing elements within a data processing system. The frame has multiple apertures that allow access to the tops of the data processing elements underneath. Standoffs attach the frame to a printed circuit board using screws." This does not identify where the limitations of the claim, as set forth by the language of the claim, are taught, but merely paraphrases the disclosure of Brezina. For these reasons, the petition does not meet the requirements of section II, subsection. 6.2, as set forth above.

Regarding the requirements of section II, subsection 6.5, the examination support document must include a showing of where **each limitation** of the application claims finds support under 35 USC 112, first paragraph, in the written description of the specification. The examination support document includes a broad statement of the support being found between a range of pages, and in all three of the figures provided. As such, the examination support document does include a clear showing of where each limitation finds support in the disclosure. A more specific description of where each limitation finds support is required. It is suggested that specific paragraph and line numbers be used to identify where each limitation of the claim has support. For these reasons, the petition does not meet the requirements of section II, subsection. 6.5, as set forth above.

DECISION

For the above-stated reasons, the petition is **dismissed**. The application will therefore be taken up by the examiner for action in its regular turn.

Petitioner is given a single opportunity to perfect the petition. Any request for reconsideration of this decision must be submitted within 1 (one) month or 30 (thirty) days, whichever is longer, from the date of this decision in order to be considered timely. Any request for reconsideration must address the deficiencies indicated above.

Petitioner is reminded that, upon granting of the special status of the application on request for reconsideration, the application will be processed expeditiously. However, due to the dismissal

of the instant petition, examination may not be completed within twelve months of the filing date of the application.

Any inquiry regarding this decision should be directed to Clayton E. LaBalle, Quality Assurance Specialist (QAS), at (571) 272-1594.

Clayton E. LaBalle, QAS
Technology Center 2800
Semiconductors, Electrical and Optical
Systems and Components

UNITED STATES PATENT AND TRADEMARK OFFICE

UNITED STATES DEPARTMENT OF COMMERCE
United States Patent and Trademark Office
Address: COMMISSIONER FOR PATENTS
P.O. Box 1450
Alexandria, Virginia 22313-1450
www.uspto.gov

APPLICATION NO.	FILING DATE	FIRST NAMED INVENTOR	ATTORNEY DOCKET NO.	CONFIRMATION NO.
12/195,156	08/20/2008	Gerald Kreissig	DE20070254US2	7959

77062 7590 04/15/2009
The Law Firm of Andrea Hence Evans, LLC
14625 Baltimore Ave., #853
Laurel, MD 20707

EXAMINER
DATSKOVSKIY, MICHAIL V

ART UNIT	PAPER NUMBER
2835	

MAIL DATE	DELIVERY MODE
04/15/2009	PAPER

Please find below and/or attached an Office communication concerning this application or proceeding.

The time period for reply, if any, is set in the attached communication.

UNITED STATES PATENT AND TRADEMARK OFFICE

Commissioner for Patents
United States Patent and Trademark Office
P.O. Box 1450
Alexandria, VA 22313-1450
www.uspto.gov

The Law Firm of Andrea Hence Evans, LLC
14625 Baltimore Ave., #853
Laurel, MD 20707

In re Application of:
KREISSIG *et al.*
Serial No.: 12/195,156
Filed: August 20, 2008
Title: **FLEXIBLE HEAT SINK INSTALLATION FOR EARLY BLADE BOARD MANUFACTURING**

DECISION ON PETITION TO MAKE SPECIAL FOR NEW APPLICATION UNDER 37 CFR 1.102

This decision on the documents filed February 20, 2009. The documents have been treated as a petition requesting reconsideration of the previous decision of January 23, 2009, dismissing the petition to make special under 37 C.F.R. §1.102(d) filed August 20, 2008.

The petition to make the application special is GRANTED.

The application is eligible for accelerated examination and the petition complies with the conditions for granting the application special status pursuant to the "Change to Practice for Petitions in Patent Applications to Make Special and for Accelerated Examination" published June 26, 2006, in the Federal Register. (71 Fed. Reg. 36323).

The prosecution of the instant application will be conducted expeditiously according to the following guidelines.

1. The application will be docketed to an examiner and taken up for action within two weeks of the date of this decision.

2. Restriction Practice:
   If the examiner determines that the claims are not directed to a single invention, a telephone request to elect one single invention will be made pursuant to MPEP 812.01. As a prerequisite to the grant of this petition, the applicant has agreed to make an oral election, by telephone, without traverse. If the applicant refuses to make an election without traverse, or the examiner cannot reach the applicant after a reasonable effort, the examiner will treat the first claimed invention (invention defined by claim 1) as having being constructively elected without traverse for examination.

3. Office action:

If it is determined that, after appropriate consultation, there is a potential rejection or any other issue to be addressed, the examiner will telephone the applicant and arrange an interview to discuss and resolve the issue. An Office action, other than a Notice of Allowance and Fee(s) Due (Notice of Allowance), will not be issued unless either: 1) an interview was conducted but did not result in agreed to action that places the application in condition for allowance, or, 2) a determination is made that an interview would be unlikely to result in the application being placed in condition for allowance, and 3) an internal conference has been held to review any rejection of any claim.

4. Time for Reply:
An Office action other than a Notice of Allowance or a final Office action will set a shortened statutory period of one month or thirty days, whichever is longer, for reply with no extension of time available under 37 C.F.R. §1.136(a). Failure to timely file a reply within this non-extendible period for reply will result in the abandonment of the application.

5. Reply by Applicant:
A timely reply to an Office action other than the Notice of Allowance must be submitted electronically via EFS or EFS-web and limited to addressing the rejections, objections and requirement made. Any amendment that attempts to: 1) add claims which would result in more than three pending independent claims or more than twenty pending total claims; 2) present claims not encompassed by the pre-examination search or an updated accelerated examination support document; or 3) present claims that are directed a non-elected invention or an invention other than that previously claimed and examined in the application, will be treated as not fully responsive and will not be entered.

For any amendment to the claims (including any new claim) that is not encompassed by the accelerated examination support document, applicant must provide an updated accelerated examination support document that encompasses the amended or new claims at the time of filing of the amendment.

To proceed expeditiously with the examination, it is recommended that a reply with amendments made to any claim or with any new claim being added be accompanied by an updated accelerated examination support document or a statement explaining how the amended or new claim is supported by the original accelerated examination support document.

6. Information Disclosure Statement (IDS):
Any IDS filed during prosecution must be submitted electronically via EFS or EFS-web, accompanied by an updated accelerated examination support document, and be in compliance with 37 C.F.R. §1.97 and §1.98.

7. Post-Allowance Processing:
   To expedite processing of the allowed application into a patent, the applicant must: 1) pay the required fees within one month of the date of the Notice of Allowance, and 2) not file any post allowance papers not required by the Office. In no event may the issue fee be paid and accepted later than three months from the date of the Notice of Allowance.

8. After-Final and Appeal Procedures:
   To expedite prosecution, after receiving the final Office action, applicant must: 1) promptly file a notice of appeal, an appeal brief and appeal fees; and 2) not request a pre-appeal brief conference.

   Any amendment, affidavit or other evidence filed after final Office action must comply with applicable rules and the requirements outlined in numbered paragraphs 5 and 6 above.

   On appeal, the application will proceed according to normal appeal procedures. After appeal, the application will again be treated special.

9. Proceedings Outside the Normal Examination Process:
   If the application becomes involved in a proceeding that is outside the normal examination process (e.g., a secrecy order, national security review, interference proceeding, petitions under 37 C.F.R. §1.181, §1.182 or §1.183), the application will be treated special before and after such proceeding.

10. Final Disposition:
    The twelve-month goal of this accelerated examination procedure ends with a final disposition. The mailing of a final Office action, a Notice of Allowance, the filing of a Notice of Appeal, or the filing of a Request for Continued Examination (RCE) is the final disposition. However, due to the dismissal of the instant petition, examination may not be completed within twelve months of the filing date of the application.

If, during prosecution, a paper is not filed electronically using EFS-web, a reply is filed but is not fully responsive, the application is involved in an appeal, or a proceeding outside normal examination process, the application will still be examined expeditiously, however, the final disposition may occur more than twelve months from the filing of the application.

Any inquiry regarding this decision should be directed to the undersigned at (571) 272-1594.

Clayton E. LaBalle

Clayton E. LaBalle, T-QAS
Technology Center 2800 - Semiconductors,
Electrical & Optical Systems & Components

UNITED STATES PATENT AND TRADEMARK OFFICE

Commissioner for Patents
United States Patent and Trademark Office
P.O. Box 1450
Alexandria, VA 22313-1450
www.uspto.gov

GREENBERG TRAURIG, LLP
200 PARK AVE.
P.O. BOX 677
FLORHAM PARK NJ 07932

COPY MAILED

SEP 11 2009

OFFICE OF PETITIONS

In re Application of	:	
Meehan et al.	:	
Application No. 12/195,164	:	ON PETITION
Filed: August 20, 2008	:	
Attorney Docket No. 117466.010701	:	

This is a decision on the petition under 37 C.F.R. § 1.137(b), filed July 31, 2009, to revive the above-identified application.

The petition is **GRANTED**.

The petition satisfies the requirements of 37 CFR 1.137(b) in that petitioner has supplied (1) the reply in the form of a signed Oath/Declaration, Replacement Drawings and the $65.00 late surcharge, (2) the petition fee, and (3) a proper statement of unintentional delay.

As the Power of Attorney was only recently given to the petitioner, it is not apparent whether the statement of unintentional delay was signed by a person who would have been in a position of knowing that the entire delay in filing the required reply from the due date for the reply until the filing of a grantable petition pursuant to 37 CFR 1.137(b) was unintentional. Nevertheless, in accordance with 37 CFR 10.18, the statement is accepted as constituting a certification of unintentional delay. However, in the event that petitioner has no knowledge that the delay was unintentional, petitioner must make such an inquiry to ascertain that, in fact, the delay was unintentional. If petitioner discovers that the delay was intentional, petitioner must notify the Office.

Telephone inquiries concerning this decision should be directed to the undersigned at (571) 272-3206.

This matter is being referred to the Office of Patent Application Processing for further pre-examination processing. Thereafter, this application will be referred to Technology Center AU 2161 for examination on the merits.

Liana Walsh
Petitions Examiner
Office of Petitions

UNITED STATES PATENT AND TRADEMARK OFFICE

Commissioner for Patents
United States Patent and Trademark Office
P.O. Box 1450
Alexandria, VA 22313-1450
www.uspto.gov

MCANDREWS HELD & MALLOY, LTD
500 WEST MADISON STREET
SUITE 3400
CHICAGO, IL 60661

MAILED

MAY 17 2010

OFFICE OF PETITIONS

In re Application of
Wael William Diab, et al.
Application No. 12/195,199
Filed: August 20, 2008
Attorney Docket No.: 19097US03

DECISION ON PETITION
UNDER 37 CFR 1.78(a)(3)

This is a decision on the petition, filed March 15, 2010, which is being treated as a petition under 37 CFR §§ 1.78(a)(3) and 1.78(a)(6) to accept an unintentionally delayed claim under 35 U.S.C. §§120 and 119(e) for the benefit of the prior-filed applications set forth in the concurrently filed amendment.

The petition is **GRANTED**.

A petition for acceptance of a claim for late priority under 37 CFR §§ 1.78(a)(3) and 1.78(a)(6) is only applicable to those applications filed on or after November 29, 2000. Further, the petition is appropriate only after the expiration of the period specified in 37 CFR §§ 1.78(a)(2)(ii) and 1.78(a)(5)(ii). In addition, the petition under 37 CFR §§ 1.78(a)(3) and 1.78(a)(6) must be accompanied by:

(1) the reference required by 35 U.S.C. §§ 120 and 119(e) and 37 CFR §§ 1.78(a)(2)(i) and 1.78(a)(5)(i) of the prior-filed application, unless previously submitted;

(2) the surcharge set forth in § 1.17(t); and

(3) a statement that the entire delay between the date the claim was due under 37 CFR §§ 1.78(a)(2)(ii) and 1.78(a)(5)(ii) and the date the claim was filed was unintentional. The Director may require additional information where there is a question whether the delay was unintentional.

Additionally, the instant nonprovisional application must be pending at the time of filing of the reference to the prior-filed provisional application as required by 37 CFR 1.78(a)(5)(ii). Further, the nonprovisional application claiming the benefit of the prior-filed provisional application must have been filed within twelve months of the filing date of the prior-filed provisional application.

All the above requirements having been satisfied, the late claim for benefit of priority under 35 U.S.C. §§ 120 and 119(e) is accepted as being unintentionally delayed.

The granting of the petition to accept the delayed benefit claim to the prior-filed applications under 37 CFR §§ 1.78(a)(3) and 1.78(a)(6) should not be construed as meaning that this application is entitled to the benefit of the filing date of the prior-filed applications. In order for this application to be entitled to the benefit of the prior-filed applications, all other requirements under 35 U.S.C. §§120 and 1.78(a)(1) and (a)(2) and under 35 U.S.C. §119(e) and 37 CFR 1.78(a)(4) and (a)(5) must be met. Similarly, the fact that the corrected Filing Receipt accompanying this decision on petition includes the prior-filed applications should not be construed as meaning that applicant is entitled to the claim for benefit of priority to the prior-filed applications noted thereon. Accordingly, the examiner will, in due course, consider this benefit claim and determine whether the application is entitled to the benefit of the earlier filing date.

A corrected Filing Receipt, which includes the priority claim to the prior-filed applications, accompanies this decision on petition.

Any questions concerning this matter may be directed to the undersigned at (571) 272-3204. All other inquiries concerning either the examination procedures or status of the application should be directed to the Technology Center.

This application is being forwarded to Technology Center Art Unit 2463 for consideration by the examiner of the claim under 35 U.S.C. § §120 and 119(e) of the prior-filed nonprovisional and provisional applications.

Sherry D. Brinkley

Sherry D. Brinkley
Petitions Examiner
Office of Petitions

Attachment: Corrected Filing Receipt

UNITED STATES PATENT AND TRADEMARK OFFICE

UNITED STATES DEPARTMENT OF COMMERCE
United States Patent and Trademark Office
Address: COMMISSIONER FOR PATENTS
P.O. Box 1450
Alexandria, Virginia 22313-1450
www.uspto.gov

APPLICATION NUMBER	FILING or 371(c) DATE	GRP ART UNIT	FIL FEE REC'D	ATTY.DOCKET.NO	TOT CLAIMS	IND CLAIMS
12/195,199	08/20/2008	2463	1530	19097US03	30	3

CONFIRMATION NO. 8040

CORRECTED FILING RECEIPT

23446
MCANDREWS HELD & MALLOY, LTD
500 WEST MADISON STREET
SUITE 3400
CHICAGO, IL 60661

OC000000041627878

Date Mailed: 05/14/2010

Receipt is acknowledged of this non-provisional patent application. The application will be taken up for examination in due course. Applicant will be notified as to the results of the examination. Any correspondence concerning the application must include the following identification information: the U.S. APPLICATION NUMBER, FILING DATE, NAME OF APPLICANT, and TITLE OF INVENTION. Fees transmitted by check or draft are subject to collection. Please verify the accuracy of the data presented on this receipt. **If an error is noted on this Filing Receipt, please submit a written request for a Filing Receipt Correction. Please provide a copy of this Filing Receipt with the changes noted thereon. If you received a "Notice to File Missing Parts" for this application, please submit any corrections to this Filing Receipt with your reply to the Notice. When the USPTO processes the reply to the Notice, the USPTO will generate another Filing Receipt incorporating the requested corrections**

Applicant(s)

Wael William Diab, San Francisco, CA;
Scott Powell, Carlsbad, CA;

Power of Attorney: The patent practitioners associated with Customer Number 23446

Domestic Priority data as claimed by applicant

This appln claims benefit of 60/979,433 10/12/2007
and claims benefit of 61/078,999 07/08/2008
and is a CIP of 11/859,429 09/21/2007
which claims benefit of 60/894,240 03/12/2007
and claims benefit of 60/917,870 05/14/2007

Foreign Applications

If Required, Foreign Filing License Granted: 08/28/2008

The country code and number of your priority application, to be used for filing abroad under the Paris Convention, is **US 12/195,199**

Projected Publication Date: Not Applicable

Non-Publication Request: No

Early Publication Request: No

Title

Method And System For Dynamically Determining When To Train Ethernet Link Partners To Support Energy Efficient Ethernet Networks

Preliminary Class

370

PROTECTING YOUR INVENTION OUTSIDE THE UNITED STATES

Since the rights granted by a U.S. patent extend only throughout the territory of the United States and have no effect in a foreign country, an inventor who wishes patent protection in another country must apply for a patent in a specific country or in regional patent offices. Applicants may wish to consider the filing of an international application under the Patent Cooperation Treaty (PCT). An international (PCT) application generally has the same effect as a regular national patent application in each PCT-member country. The PCT process **simplifies** the filing of patent applications on the same invention in member countries, but **does not result** in a grant of "an international patent" and does not eliminate the need of applicants to file additional documents and fees in countries where patent protection is desired.

Almost every country has its own patent law, and a person desiring a patent in a particular country must make an application for patent in that country in accordance with its particular laws. Since the laws of many countries differ in various respects from the patent law of the United States, applicants are advised to seek guidance from specific foreign countries to ensure that patent rights are not lost prematurely.

Applicants also are advised that in the case of inventions made in the United States, the Director of the USPTO must issue a license before applicants can apply for a patent in a foreign country. The filing of a U.S. patent application serves as a request for a foreign filing license. The application's filing receipt contains further information and guidance as to the status of applicant's license for foreign filing.

Applicants may wish to consult the USPTO booklet, "General Information Concerning Patents" (specifically, the section entitled "Treaties and Foreign Patents") for more information on timeframes and deadlines for filing foreign patent applications. The guide is available either by contacting the USPTO Contact Center at 800-786-9199, or it can be viewed on the USPTO website at http://www.uspto.gov/web/offices/pac/doc/general/index.html.

For information on preventing theft of your intellectual property (patents, trademarks and copyrights), you may wish to consult the U.S. Government website, http://www.stopfakes.gov. Part of a Department of Commerce initiative, this website includes self-help "toolkits" giving innovators guidance on how to protect intellectual property in specific countries such as China, Korea and Mexico. For questions regarding patent enforcement issues, applicants may call the U.S. Government hotline at 1-866-999-HALT (1-866-999-4158).

LICENSE FOR FOREIGN FILING UNDER

Title 35, United States Code, Section 184

Title 37, Code of Federal Regulations, 5.11 & 5.15

GRANTED

The applicant has been granted a license under 35 U.S.C. 184, if the phrase "IF REQUIRED, FOREIGN FILING LICENSE GRANTED" followed by a date appears on this form. Such licenses are issued in all applications where

the conditions for issuance of a license have been met, regardless of whether or not a license may be required as set forth in 37 CFR 5.15. The scope and limitations of this license are set forth in 37 CFR 5.15(a) unless an earlier license has been issued under 37 CFR 5.15(b). The license is subject to revocation upon written notification. The date indicated is the effective date of the license, unless an earlier license of similar scope has been granted under 37 CFR 5.13 or 5.14.

This license is to be retained by the licensee and may be used at any time on or after the effective date thereof unless it is revoked. This license is automatically transferred to any related applications(s) filed under 37 CFR 1.53(d). This license is not retroactive.

The grant of a license does not in any way lessen the responsibility of a licensee for the security of the subject matter as imposed by any Government contract or the provisions of existing laws relating to espionage and the national security or the export of technical data. Licensees should apprise themselves of current regulations especially with respect to certain countries, of other agencies, particularly the Office of Defense Trade Controls, Department of State (with respect to Arms, Munitions and Implements of War (22 CFR 121-128)); the Bureau of Industry and Security, Department of Commerce (15 CFR parts 730-774); the Office of Foreign AssetsControl, Department of Treasury (31 CFR Parts 500+) and the Department of Energy.

NOT GRANTED

No license under 35 U.S.C. 184 has been granted at this time, if the phrase "IF REQUIRED, FOREIGN FILING LICENSE GRANTED" DOES NOT appear on this form. Applicant may still petition for a license under 37 CFR 5.12, if a license is desired before the expiration of 6 months from the filing date of the application. If 6 months has lapsed from the filing date of this application and the licensee has not received any indication of a secrecy order under 35 U.S.C. 181, the licensee may foreign file the application pursuant to 37 CFR 5.15(b).

UNITED STATES PATENT AND TRADEMARK OFFICE

Commissioner for Patents
United States Patent and Trademark Office
P.O. Box 1450
Alexandria, VA 22313-1450
www.uspto.gov

In re Application of
Claude Leonard Benckenstein

Application No. 12195274

Filed:

Attorney Docket No. 1442.015

:DECISION ON PETITION TO MAKE SPECIAL
:UNDER 37 CFR 1.102(c)(1)

This is a decision on the electronic petition under 37 CFR 1.102 (c)(1), filed 20-AUG-2008 to make the above-identified application special based on applicant's age as set forth in MPEP § 708.02, Section IV.

The petition is **GRANTED**.

A grantable petition to make an application special under 37 CFR 1.102(c)(1), MPEP § 708.02, Section IV: Applicant's Age must include a statement by applicant or a registered practitioner having evidence that applicant is at least 65 years of age. No fee is required.

Accordingly, the above-identified application has been accorded "special" status and will be taken up for action by the examiner upon the completion of all pre-examination processing.

Telephone inquiries concerning this electronic decision should be directed to the Electronic Business Center at 866-217-9197.

All other inquiries concerning either the examination or status of the application should be directed to the Technology Center.

UNITED STATES PATENT AND TRADEMARK OFFICE

Commissioner for Patents
United States Patent and Trademark Office
P.O. Box 1450
Alexandria, VA 22313-1450
www.uspto.gov

Finnegan, Henderson, Farabow, Garrett & Dunner, LLP
901 New York Avenue, NW
Washington, DC 20001-4413

MAILED

AUG 3 1 2009

OFFICE OF PETITIONS

In re Application of	:	
Pengfei Hu et al.	:	
Application No. 12/195,301	:	DECISION ON PETITION
Filed: August 20, 2008	:	TO WITHDRAW
Attorney Docket No. 9145.0062-00	:	FROM RECORD
	:	

This is a decision on the Request to Withdraw as attorney or agent of record under 37 C.F.R. § 1.36(b), filed July 17, 2009.

The request is **NOT APPROVED.**

A grantable request to withdraw as attorney/agent of record must be signed by every attorney/agent seeking to withdraw or contain a clear indication that one attorney is signing on behalf of another/others. The Office requires the practitioner(s) requesting withdrawal to certify that he, she, or they have: (1) given reasonable notice to the client, prior to the expiration of the response period, that the practitioner(s) intends to withdraw from employment; (2) delivered to the client or a duly authorized representative of the client all papers and property (including funds) to which the client is entitled; and (3) notified the client of any responses that may be due and the time frame within which the client must respond, pursuant 37 CFR 10.40(c).

The request cannot be approved because there is no indication that the acts noted in the above-identified certifications have been performed. Refer to Form No. PTO/SB/83 (Updated 4/2008).

All future communications from the Office will continue to be directed to the above-listed address until otherwise notified by applicant.

Telephone inquiries concerning this decision should be directed to the undersigned at 571-272-6735.

/Kimberly A. Inabinet/

Kimberly Inabinet
Petitions Examiner
Office of Petitions

cc: Haynes and Boone, LLP
IP Section
2323 Victory Avenue
Suite 700
Dallas, TX 75219

UNITED STATES PATENT AND TRADEMARK OFFICE

COMMISSIONER FOR PATENTS
UNITED STATES PATENT AND TRADEMARK OFFICE
P.O. BOX 1450
ALEXANDRIA, VA 22313-1450
www.uspto.gov

Finnegan, Henderson, Farabow, Garrett & Dunner, LLP
901 New York Avenue, NW
Washington, DC 20001-4413

MAILED

OCT 26 2009

OFFICE OF PETITIONS

In re Application of	:	
Pengfei Hu et al.	:	
Application No. 12/195,301	:	DECISION ON PETITION
Filed: August 20, 2008	:	TO WITHDRAW
Attorney Docket No. 9145.0062-00	:	FROM RECORD
	:	

This is a decision on the renewed Request to Withdraw as attorney or agent of record under 37 C.F.R. § 1.36(b), filed October 6, 2009.

The request is **NOT APPROVED.**

The Office will no longer accept address changes to a new practitioner or law firm filed with a Request, absent the filing of a power of attorney to the new representative. The Office will either change the correspondence address of record to the most current address information provided for the assignee of the entire interest who properly became of record under 37 CFR 3.71 or, if no assignee of the entire interest has properly been made of record under 37 CFR 3.71, the most current address information provided for the first named inventor.

Accordingly, the request to withdraw from record cannot be approved because the request to change the correspondence address does not include a proper power of attorney nor is the address that of: (1) the first named inventor; or (2) an assignee of the entire interest under 37 C.F.R 3.71.

All future communications from the Office will continue to be directed to the above-identified address until otherwise properly notified.

Telephone inquiries concerning this decision should be directed to the undersigned at 571-272-4618.

/Kimberly Inabinet/

Kimberly Inabinet
Petitions Examiner
Office of Petitions

cc: Haynes and Boone, LLP
IP Section
2323 Victory Avenue
Suite 700
Dallas, TX 75213

UNITED STATES PATENT AND TRADEMARK OFFICE

Commissioner for Patents
United States Patent and Trademark Office
P.O. Box 1450
Alexandria, VA 22313-1450
www.uspto.gov

COPY MAILED

SEP 30 2009

OFFICE OF PETITIONS

SCOTT T. GRIGGS
17950 Preston Road
Suite 1000
DALLAS TX 75252

In re Application of
W. Dale Foster et al.
Application No. 12/195,389
Filed: August 20, 2008
Attorney Docket No. 1043.1008

DECISION ON PETITION TO WITHDRAW FROM RECORD

This is a decision on the Request to Withdraw as attorney or agent of record under 37 CFR § 1.36(b), filed August 17, 2009.

The request is **APPROVED**.

A grantable request to withdraw as attorney/agent of record must be signed by every attorney/agent seeking to withdraw or contain a clear indication that one attorney is signing on behalf of another/others.

The request was signed by Scott T. Griggs on behalf of all attorneys of record who are associated with Customer No. 31814.

All attorneys/agents associated with the Customer No. 31814 have been withdrawn.

Applicant is reminded that there is no attorney of record at this time.

All future correspondence will be directed to the assignee of record "CelAccess Systems, Inc." at the address list listed in the request.

There is no outstanding Office action that requires a reply from the applicant.

Telephone inquiries concerning this decision should be directed to the undersigned at 571-272-4584.

JoAnne Burke
Petitions Examiner
Office of Petitions

cc: CelAccess Systems, Inc.
13619 Inwood Road, Suite 60
Dallas, TX 75244

UNITED STATES PATENT AND TRADEMARK OFFICE

UNITED STATES DEPARTMENT OF COMMERCE
United States Patent and Trademark Office
Address: COMMISSIONER FOR PATENTS
P.O. Box 1450
Alexandria, Virginia 22313-1450
www.uspto.gov

APPLICATION NUMBER	FILING OR 371(C) DATE	FIRST NAMED APPLICANT	ATTY. DOCKET NO./TITLE
12/195,389	08/20/2008	W. Dale Foster	1043.1008

CONFIRMATION NO. 8438

POWER OF ATTORNEY NOTICE

31814
SCOTT T. GRIGGS
17950 Preston Road
Suite 1000
DALLAS, TX 75252

OC000000038044552

Date Mailed: 09/30/2009

NOTICE REGARDING CHANGE OF POWER OF ATTORNEY

This is in response to the Power of Attorney filed 08/17/2009.

- The withdrawal as attorney in this application has been accepted. Future correspondence will be mailed to the new address of record. 37 CFR 1.33.

/jlburke/

Office of Data Management, Application Assistance Unit (571) 272-4000, or (571) 272-4200, or 1-888-786-0101

UNITED STATES PATENT AND TRADEMARK OFFICE

UNITED STATES DEPARTMENT OF COMMERCE
United States Patent and Trademark Office
Address: COMMISSIONER FOR PATENTS
P.O. Box 1450
Alexandria, Virginia 22313-1450
www.uspto.gov

Allen, Dyer, Doppelt, Milbrath & Gilchrist - RIM
255 S. Orange Avenue
Suite 1401
Orlando, FL 32801

Mail Date: 04/20/2010

Applicant	: Blair Cooper	: DECISION ON REQUEST FOR
Patent Number	: 7644185	: RECALCULATION of PATENT
Issue Date	: 01/05/2010	: TERM ADJUSTMENT IN VIEW
Appliction No	: 12/195,467	: OF WYETH AND NOTICE OF INTENT TO
Filed	: 08/21/2008	: ISSUE CERTIFICATE OF CORRECTION
		:

The Request for Recalculation is **GRANTED** to the extent indicated.

The patent term adjustment has been determined to be **0** days. The USPTO will *sua sponte* issue a certificate of correction reflecting the amount of PTA days determined by the recalculation.

Prior to the issuance of the certificate of correction, the USPTO will afford patentee an opportunity to be heard and request reconsideration. Accordingly, patentee has **one month or thirty (30) days**, whichever is longer, to file a request for reconsideration of this patent term adjustment calculation. See 35 U.S.C. 154(b)(3)(B)(ii) and 37 CFR 1.322(a)(4). No extensions of time will be granted under 37 CFR 1.136.

Patentee should use document code PET.OP if electronically filing a request for reconsideration of this patent term adjustment calculation. The patentee must also include the information required by 37 CFR 1.705(b)(2) and the fee required by 37 CFR 1.18(e). If patentee does not file a timely request for reconsideration of this patent term adjustment calculation including the information required by 37 CFR 1.705(b)(2) and the fee required by 37 CFR 1.18(e), the USPTO will issue a certificate of correction reflecting the PTA determination noted above.

Patentee should be aware that in order to preserve the right to review in the United States District Court for the District of Columbia of the USPTO patent term adjustment determination, patentee must ensure that he or she also take the steps required under 35 U.S.C. 154(b)(4)(A) in a timely manner. Nothing in the request for recalculation should be construed as providing an alternative time frame for commencing a civil action under 35 U.S.C. 154(b)(4)(A).

Any questions concerning this decision should be directed to the Office of Patent Legal Administration at 571-272-7702.

UNITED STATES PATENT AND TRADEMARK OFFICE

Commissioner for Patents
United States Patent and Trademark Office
P.O. Box 1450
Alexandria, VA 22313-1450
www.uspto.gov

WOODCOCK WASHBURN LLP
CIRA CENTRE, 12TH FLOOR
2929 ARCH STREET
PHILADELPHIA, PA 19104-2891

MAILED

JUL 14 2009

OFFICE OF PETITIONS

In re Application of	:	
Erik Sundstrom, et al.	:	
Application No. 12/195,578	:	ON PETITION
Filed: August 21, 2008	:	
Attorney Docket No. SECO-0006	:	

This is a decision on the petition, filed May 27, 2009, which is being treated as a petition under 37 CFR 1.181 (no fee) requesting withdrawal of the holding of abandonment in the above-identified application.

The petition is **GRANTED**.

This application was held abandoned for failure to reply to the Notice to File Missing Parts of Nonprovisional Application (Notice) mailed September 2, 2008. A Notice of Abandonment was subsequently mailed on May 6, 2009. In response on May 27, 2009, the present petition was filed.

Petitioner requests that the abandonment be withdrawn since a response was timely filed on November 3, 2008. Petitioner explains that the response was inadvertently uploaded into the incorrect application number. Consequently, the response was not associated with the correct application until petitioner contacted the USPTO in response to the Notice of Abandonment of May 6, 2009. The intended response was moved to the correct application on May 21, 2009.

A review of record of the incorrect application confirms receipt of the response filed November 3, 2008. Further, it is noted that the response was directed to the correct application number and included sufficient information to associate the papers with the correct application.

In view of the above, the holding of abandonment is hereby withdrawn and the application is restored to pending status.

The application is being referred to the Office of Patent Application Processing (OPAP) for further processing.

Telephone inquiries concerning this decision should be directed to the undersigned at (571) 272-3204. Telephone inquiries related to processing at OPAP should be directed to their hotline at (571) 272-4000.

Sherry D. Brinkley
Petitions Examiner
Office of Petitions

UNITED STATES PATENT AND TRADEMARK OFFICE

Commissioner for Patents
United States Patent and Trademark Office
P.O. Box 1450
Alexandria, VA 22313-1450
www.uspto.gov

COPY MAILED
SEP 22 2009
OFFICE OF PETITIONS

OBLON, SPIVAK, MCCLELLAND MAIER & NEUSTADT, L.L.P.
1940 DUKE STREET
ALEXANDRIA VA 22314

In re Application of
Maio, et al.
Application No. 12/195,625
Filed: August 21, 2008
Atty. Dkt. No.: 330777US0CONT

: DECISION REFUSING STATUS
: UNDER 37 CFR 1.47(a)

This decision is in response to the petition under 37 CFR 1.47(a) filed November 12, 2008.

The petition under 37 CFR 1.47(a) is **DISMISSED**.

Petitioners are given TWO MONTHS from the mailing date of this decision to reply, correcting the below-noted deficiencies. Any reply should be entitled "Request for Reconsideration of Petition Under 37 CFR 1.47(a)," and should only address the deficiencies noted herein. The reply under 37 CFR 1.47(a) may include an oath or declaration executed by the non-signing inventors. Any extensions of time will be governed by 37 CFR 1.136(a).

The above-identified application was filed August 21, 2008 without an executed oath or declaration. Accordingly, a Notice to File Missing Parts of Nonprovisional Application (Notice) was mailed September 12, 2008. The Notice required, *inter alia*, a surcharge and an executed oath or declaration.

A grantable petition under 37 CFR 1.47(a) requires: (1) proof that the non-signing inventor cannot be reached or refuses to sign the oath or declaration after having been presented with the application papers (specification, claims and drawings); (2) an acceptable oath or declaration in compliance with 35 U.S.C. §§ 115 and 116; (3) the petition fee; and (4) a statement of the last known address of the non-signing inventor.

The instant application fails to satisfy requirements (1) and (2) set forth above.

As to item (1), petitioners have failed to establish that the non-signing inventor Mauro Menegoli received a complete copy of the instant application papers (specification, including claims, drawings, and oath or declaration) and thereafter refused to execute an oath or declaration, or, that the non-signing inventor cannot be reached or located for presentation of the application papers.

Petitioners assert that the inventor was provided a copy of the application papers for PCT/EP04/052674 and that an executed declaration to date has not been received. Petitioners assert that the instant application is the equivalent of the aforementioned PCT application.

Petitioners are reminded that before a refusal to sign an oath or declaration can be alleged, it must be demonstrated that a *bona fide* effort has been made to present a complete copy of the

instant application papers (specification, including claims, drawings, and oath or declaration) to the non-signing inventor at the non-signing inventor's last known address, typically a residential address.

The instant petition seeks to rely on an alleged presentation of the PCT application to the non-signing inventor to establish that the inventor has refused to execute a declaration for the instant application.

Petitioners are required to establish that the non-signing inventor was provided a complete copy of the instant application, 12/195,625, before it can be established that the non-signing inventor has refused to execute the declaration for this application. Petitioners cannot rely on the presentation of the PCT application.

Any renewed petition should be accompanied by evidence to establish that the non-signing inventor was sent a complete copy of the application papers (specification, claims, drawings, and oath or declaration) and thereafter refused to execute the declaration. Petitioners may wish to provide the Office copies of letters sent to the inventor indicating the enclosure of the application papers (specification, claims, drawings, and oath or declaration). If after the inventor receives the application papers and requests to execute the oath or declaration are refused, these facts should be set forth in a statement of facts signed by the person to whom the refusals were made and detailing with specificity the exact manner of the refusals. If a written refusal has been made, a copy of the written refusal should be included on renewed petition.

As to item (2), an acceptable oath or declaration for the patent application in compliance with 37 CFR 1.63 and 1.64 has not been presented. The declaration is not acceptable as it fails to identify the instant application by application number and filing date. Instead, it appears to be a copy of an incomplete PCT declaration, incomplete in that it is not fully executed by all of the inventors named therein.

Any renewed petition must be accompanied by a new oath or declaration properly executed by the available inventors and in compliance with 37 CFR 1.63 and 1.64. The signature block of the non-signing inventor should remain unexecuted. *See* MPEP 409.03(b).

Further correspondence with respect to this matter should be addressed as follows:

By mail:	Mail Stop Petition Commissioner for Patents P.O. Box 1450 Alexandria, VA 22313-1450
By facsimile:	(571) 273-8300
By hand:	U.S. Patent and Trademark Office Customer Service Window Mail Stop Petition Randolph Building 401 Dulany Street Alexandria, VA 22314

Telephone inquiries related to this decision may be directed to the undersigned at (571) 272-3205.

Alesia M. Brown
Petitions Attorney
Office of Petitions

UNITED STATES PATENT AND TRADEMARK OFFICE

UNITED STATES DEPARTMENT OF COMMERCE
United States Patent and Trademark Office
Address: COMMISSIONER FOR PATENTS
P.O. Box 1450
Alexandria, Virginia 22313-1450
www.uspto.gov

APPLICATION NO.	FILING DATE	FIRST NAMED INVENTOR	ATTORNEY DOCKET NO.	CONFIRMATION NO.
12/195,642	08/21/2008	Sun Young Han	7016.032	8896

21176 7590 09/11/2008
SUMMA, ALLAN & ADDITON, P.A.
11610 NORTH COMMUNITY HOUSE ROAD
SUITE 200
CHARLOTTE, NC 28277

EXAMINER

ART UNIT	PAPER NUMBER
2835	

MAIL DATE	DELIVERY MODE
09/11/2008	PAPER

Please find below and/or attached an Office communication concerning this application or proceeding.

The time period for reply, if any, is set in the attached communication.

UNITED STATES PATENT AND TRADEMARK OFFICE

Commissioner for Patents
United States Patent and Trademark Office
P.O. Box 1450
Alexandria, VA 22313-1450
www.uspto.gov

SUMMA, ALLAN & ADDITON, P.A.
11610 NORTH COMMUNITY HOUSE ROAD
SUITE 200
CHARLOTTE NC 28277

In re Application of	:	
Sun Young HAN	:	**DECISION ON REQUEST TO**
Application No. 12/195,642	:	**PARTICIPATE IN PATENT**
Filed: 08/21/2008	:	**PROSECUTION HIGHWAY**
Attorney Docket No. 7016.032	:	**PILOT PROGRAM AND PETITION**
	:	**TO MAKE SPECIAL UNDER**
	:	**37 CFR 1.102(d)**

This is a decision on the request to participate in the Patent Prosecution Highway (PPH) pilot program and the petition under 37 CFR 1.102(d), filed 8/21/2008, to make the above-identified application special.

The request and petition are **GRANTED**.

A grantable request to participate in the PPH pilot program and petition to make special require:

1. The U.S. application must validly claim priority under 35 U.S.C. 119(a) to one or more applications filed in the KIPO, note where the KIPO application with similar claims is not the same application from which the U.S. application claims priority that the applicant must identify the relationship between the KIPO application with similar claims and the KIPO priority application;
2. Applicant must submit a copy of:
    a. The allowable/patentable claim(s) from the KIPO application(s) or if a copy of the allowable/patentable claims is available via the Dossier Access System (DAS) applicant may request the USPTO obtain a copy from the DAS, however if the USPTO is unable to obtain a copy from the DAS the applicant will be required to submit a copy;
    b. An English translation of the allowable/patentable claim(s) and
    c. A statement that the English translation is accurate;
3. Applicant must
    a. Ensure all the claims in the U.S. application must sufficiently correspond or be amended to sufficiently correspond to the allowable/patentable claim(s) in the KIPO application(s) and
    b. Submit a claims correspondence table in English;
4. Examination of the U.S. application has not begun;

5. Applicant must submit:
    a. Documentation of prior office action:
        i. a copy of the office action(s) just prior to the "Decision to Grant a Patent" from each of the KIPO application(s) containing the allowable/patentable claim(s) or
        ii. if the allowable/patentable claims(s) are from a "Notification of Reasons for Refusal" then the Notification of Reasons for Refusal or
        iii. if the KIPO application is a first action allowance then no office action from the KIPO is necessary should be indicated on the request/petition form;

    Further, if a copy of the documents from a or b above is available via the Dossier Access System (DAS) applicant may request the USPTO obtain a copy from the DAS, however if the USPTO is unable to obtain a copy from the DAS the applicant will be required to submit a copy;
    b. An English language translation of the KIPO Office action from (5)(a)(i)-(ii) above
    c. A statement that the English translation is accurate;
6. Applicant must submit:
    a. An IDS listing the documents cited by the KIPO examiner in the KIPO office action (unless already submitted in this application)
    b. Copies of the documents except U.S. patents or U.S. patent application publications (unless already submitted in this application);
7. The required petition fee under 37 CFR 1.17(h).

CONCLUSION

The request to participate in the PPH pilot program and petition comply with the above requirements. Accordingly, the above-identified application has been accorded "special" status.

Response must be faxed to Michael Day at 571-273-1568.

Telephone inquiries concerning this decision should be directed to Michael Day at 571-272-1568.

All other inquiries concerning the examination or status of the application is accessible in the PAIR system at http://uspto.gov/ebc/index.html.

The application is being forwarded to the examiner for action on the merits commensurate with this decision.

Michael Day
TQAS
Technology Center 2800- Semiconductors,
Electrical & Optical Systems & Components

1 0 MAR 2009

United States Patent and Trademark Office

Commissioner for Patents
United States Patent and Trademark Office
P.O. Box 1450
Alexandria, VA 22313-1450
www.uspto.gov

Studebaker & Brackett PC
1890 Preston White Drive
Suite 105
Reston VA 20191

In re Application of:	:	
Maurer	:	
Application No.: 12/195,666	:	
Filing Date: 21 August 2008	:	DECISION
Attorney Docket No.: 742100-142	:	
For: Woven Fabric	:	

This is in response to the petition under 37 CFR 1.182 filed on 29 August 2008.

BACKGROUND

International application PCT/EP2007/002470 was filed on 20 March 2007, claimed an earliest priority date of 23 March 2006, and designated the United States. The International Bureau transmitted a copy of the published international application to the USPTO on 04 October 2007. The 30 month period for payment of the basic national fee in the U.S. ended as of midnight on 23 September 2008. Applicants filed the instant application papers on 21 August 2008.

DISCUSSION

The petition states in part that

> Applicant requests that the application filing type be corrected pursuant to 37 C.F.R. §1.182. During the filing of the above application, applicant's representative erroneously chose "Utility under 35 U.S.C. §111(e)" instead of "Utility U.S. National Stage Under 35 U.S.C. §371." However, all papers filed with the above application are in accordance with the rules for filing "Utility National Stage Under 35 U.S.C. §371." In view of the above, applicant believes that the application should be prosecuted as a 371 National Stage Application.

The USPTO has adopted a bright-line test for determining whether application papers will be processed under 35 U.S.C. 371 or alternatively under 35 U.S.C. 111(a). Under this standard, any intended filing of an international application as a national stage application must clearly and unambiguously be identified as such and must satisfy all of the conditions set forth in 35 U.S.C. 371(c). The official PTO Notice published in the Official Gazette at 1077 OG 13 entitled "Minimum Requirements for Acceptance of Applications Under 35 U.S.C. 371 (the National Stage of PCT)" states, in part, the following:

> The Patent and Trademark Office is continuing to receive application papers which do not clearly identify whether the papers (1) are being submitted to enter the national stage of the Patent Cooperation Treaty (PCT) under 35 U.S.C. 371 or (2) are being filed as a regular national application under 35 U.S.C. 111.
>
> To clearly indicate an international application is being filed under 35 U.S.C. 371 the applicant should use the "Transmittal Letter for United States Designated Office" (Form PTO-1390) as the transmittal letter.
>
> Alternatively, one of the following indications may be used:

1) the applicant shall clearly state in the transmittal or cover letter that he or she is filing under 35 U.S.C. 371 or entering the national stage under PCT; or

2) the applicant clearly identifies in the oath or declaration the specification to which it is directed by referring to a particular international application by PCT Serial Number and International Filing Date and that he or she is executing the declaration as, and seeking a U.S. Patent as, the inventor of the invention described in the identified international application.

Inspection of the correspondence filed on 21 August 2008 reveals that the Application Data Sheet refers to "a 371 of international 2007110175" with a "filing date" of "2007-10-04" (which differs from the international filing date of PCT/EP2007/002470). Meanwhile, the Electronic Acknowledgment Receipt indicates the "Application Type" as "Utility under 35 USC 111(a)." These indicia did not constitute clear and unambiguous instructions that processing under 35 U.S.C. 371 rather than U.S.C. 111(a) was desired. Under the policy referenced above, this application was properly processed under 35 U.S.C. 111(a).

Counsel states that applicants intended to enter the national stage under 35 U.S.C. 371, but applicants have not advanced any substantial reason (e.g., loss of rights) to change the status of this application under 35 U.S.C. 111(a) to the status of a national stage application under 35 U.S.C. 371. It appears that maintaining the present status of this application under 35 U.S.C. 371 will not result in any loss of rights to applicant. The U.S. Statutes and Regulations do not make specific provision for conversion of applications, and as such the USPTO does not grant such petitions for conversion as a mere matter of course. Since petitioner has not shown sufficient cause (e.g., loss of rights) or lack of availability of an alternative remedy, it would be appropriate, and consistent with the policy considerations described above, to continue processing this application under 35 U.S.C. 111(a).

The $400.00 petition fee (fee code 1462) is being charged to Deposit Account No. 50-4525, per the authorization included in the petition.

DECISION

The petition under 37 CFR 1.182 is **DISMISSED**, without prejudice.

No response to this Decision is required, unless petitioner wishes to request reconsideration. If reconsideration on the merits of this matter is desired, a proper response must be filed within **TWO (2) MONTHS** from the mail date of this decision. Any reconsideration request should include a cover letter entitled "Renewed Petition Under 37 CFR 1.182." Extensions of time may be obtained under 37 CFR 1.136(a).

Please direct any further correspondence with respect to this matter to the Assistant Commissioner for Patents, Mail Stop PCT, P.O. Box 1450, Alexandria, VA 22313-1450, and address the contents of the letter to the attention of the Office of PCT Legal Administration.

This application is being returned to the Office of Patent Application Processing for continued processing under 35 U.S.C. 111(a).

/George Dombroske/
George Dombroske
PCT Legal Examiner
Office of PCT Legal Administration
Tel: (571) 272-3283
Fax: (571) 273-0459

UNITED STATES PATENT AND TRADEMARK OFFICE

Commissioner for Patents
United States Patent and Trademark Office
P.O. Box 1450
Alexandria, VA 22313-1450
www.uspto.gov

ARENT FOX LLP
555 WEST FIFTH STREET
48TH FLOOR
LOS ANGELES CA 90013

MAILED

FEB 17 2009

OFFICE OF PETITIONS

In re Application of

PHILLIPS, John et al.
Application No. 12/195,714
Filed: August 21, 2008
Attorney Docket No. **030269.00015**

DECISION ON PETITION
TO WITHDRAW
FROM RECORD

This is a decision on the Request to Withdraw as attorney or agent of record under 37 C.F.R. § 1.36(b), filed January 23, 2009.

The request is **NOT APPROVED**.

The Office has revised its change in procedure for request to withdraw from representation applies to requests filed on or after May 12, 2008.

A grantable request to withdraw as attorney/agent of record must be signed by every attorney/agent seeking to withdraw or contain a clear indication that one attorney is signing on behalf of another/others. The Office requires the practitioner(s) requesting withdrawal to certify that he, she, or they have: (1) given reasonable notice to the client, prior to the expiration of the response period, that the practitioner(s) intends to withdraw from employment; (2) delivered to the client or a duly authorized representative of the client all papers and property (including funds) to which the client is entitled; and (3) notified the client of any responses that may be due and the time frame within which the client must respond, pursuant 37 CFR 10.40(c).

The request cannot be approved because there is no indication that acts (1) thru (3) noted in the above-identified certifications have been performed. All boxes must be checked.

All future communications from the Office will continue to be directed to the above-listed address until otherwise notified by applicant.

Telephone inquiries concerning this decision should be directed to Tredelle Jackson at 571-272- 2783.

Tredelle D. Jackson
Paralegal Specialist
Office of Petitions

cc: **MARK KLEIN**
2701 SOUTH HARBOR BLVD.
SANATA ANA CA 92704

UNITED STATES PATENT AND TRADEMARK OFFICE

UNITED STATES DEPARTMENT OF COMMERCE
United States Patent and Trademark Office
Address: COMMISSIONER FOR PATENTS
P.O. Box 1450
Alexandria, Virginia 22313-1450
www.uspto.gov

APPLICATION NO.	FILING DATE	FIRST NAMED INVENTOR	ATTORNEY DOCKET NO.	CONFIRMATION NO.
12/195,720	08/21/2008	Satoshi YOKOTE	SUTOSH.237AUS	9020

7590 07/20/2009
KNOBBE MARTENS OLSON & BEAR LLP
2040 MAIN STREET
FOURTEENTH FLOOR
IRVINE, CA 92614

EXAMINER
OWENS, DOUGLAS W

ART UNIT	PAPER NUMBER
2821	

NOTIFICATION DATE	DELIVERY MODE
07/20/2009	ELECTRONIC

DECISION GRANTING PETITION UNDER 37 CFR 1.138(d)

The declaration of express abandonment is recognized

This is in response to the petition under 37 CFR 1.138(d), requesting for a refund of any previously paid search fee and excess claims fee in the above-identified application.

The petition is granted.

The express abandonment is recognized. Any previously paid search fee and excess claims fee are hereby refunded.

Telephone inquiries should be directed to the Office of Data Management at (571) 272-4200.

Nioni Farmer

Patent Publication Branch
Office of Data Management

Refund Ref:
07/17/2009 0030072349

Credit Card Refund Total: $510.00

Master C: XXXXXXXXXXXX5583

Adjustment date: 07/17/2009 NFARMER
08/22/2008 INTEFSW 00000306 12195720
02 FC:1111 -510.00 OP

FORM PET651G (Rev. 08/07)

UNITED STATES PATENT AND TRADEMARK OFFICE

UNITED STATES DEPARTMENT OF COMMERCE
United States Patent and Trademark Office
Address: COMMISSIONER FOR PATENTS
P.O. Box 1450
Alexandria, Virginia 22313-1450
www.uspto.gov

APPLICATION NO.	FILING DATE	FIRST NAMED INVENTOR	ATTORNEY DOCKET NO.	CONFIRMATION NO.
12/195,740	08/21/2008	Giancarlo CARBONE	FR920080119US1_1963-8054	9054

79395 7590 09/26/2008
MORGAN & FINNEGAN LLP
3 WORLD FINANCIAL CENTER
NEW YORK, NY 10281-2101

EXAMINER

ART UNIT	PAPER NUMBER
3623	

MAIL DATE	DELIVERY MODE
09/26/2008	PAPER

Please find below and/or attached an Office communication concerning this application or proceeding.

The time period for reply, if any, is set in the attached communication.

UNITED STATES PATENT AND TRADEMARK OFFICE

Commissioner for Patents
United States Patent and Trademark Office
P.O. Box 1450
Alexandria, VA 22313-1450
www.uspto.gov

MAILED
FROM DIRECTORS OFFICE

SEP 26 2008

TECHNOLOGY CENTER 3600

MORGAN & FINNEGAN LLP
3 WORLD FINANCIAL CENTER
NEW YORK NY 10281-2101

In re application of : **DECISION ON PETITION**
Carbone et al : **TO MAKE SPECIAL FOR**
Application 12/195,740 : **NEW APPLICATION**
Filed: August 21, 2008 : **UNDER 37 CFR 1.102**
For: **METHOD AND SYSTEM FOR FOCUSED AND SCALABLE EVENT ENRICHMENT FOR COMPLEX IMS SERVICE MODELS**

This is a decision on the petition filed on August 21, 2008, to make the above-identified application special for accelerated examination procedure under 37 C.F.R. § 1.102(d).

The petition to make the application special is **DISMISSED**.

REGULATION AND PRACTICE

A grantable petition to make special under 37 C.F.R. § 1.102(d) and pursuant to the "Change to Practice for Petitions in Patent Applications to Make Special and for Accelerated Examination" published in the Federal Register on June 26, 2006 (71 Fed. Reg. 36323), must satisfy the following conditions:

I. Conditions Regarding the Application:

1. the application must be a non-reissue utility or design application filed under 37 CFR 1.111(a);
2. the application, the petition and the required fees must be filed electronically using the USPTO's electronic filing system (EFS), or EFS-web; if not filed electronically, a statement asserting that EFS and EFS-web were not available during the normal business hours.
3. at the time of filing, the application must be complete under 37 CFR 1.51 and in condition for examination;
4. the application must contain three or fewer independent claims and twenty or fewer total claims and the claims must be directed to a single invention.

II. Conditions Regarding the Petition:

The petition must:

1. be filed with the application;

2. include a statement that applicant agrees not to separately argue the patentability of any independent claim during any appeal in the application;

3. include a statement that applicant agrees to make an election without traverse in a telephone interview.

4. include a statement that applicant agrees to conduct such an interview when requested by the examiner.

5. include a statement, made based on a good faith belief, that a preexamination search in compliance with the following requirements, was conducted, including an identification of the field of search by United States class and subclass, where applicable, and for database searches, the search logic or chemical structure or sequence used as a query, the name of the file(s) searched and the database service, and the date of the search.

The preexamination search must:

5.1 involve U.S. patents and patent application publications, foreign patent documents, and non-patent literature, unless the applicant can justify with reasonable certainty that no references more pertinent than those already identified are likely to be found in the eliminated sources and includes such a justification with this statement;

5.2. be directed to the claimed invention and encompass all of the features of the claims, giving the claims the broadest reasonable interpretation;

5.3. encompass the disclosed features that may be claimed.

6. must provide in support of the petition an accelerated examination support document.

An accelerated examination support document must include:

6.1. an information disclosure statement (IDS) in compliance with 37 CFR 1.98 citing each reference deemed most closely related to the subject matter of each of the claims;

6.2. an identification of all the limitations in the claims that are disclosed by the reference specifying where the limitation is disclosed in the cited reference;

6.3. a detailed explanation of how each of the claims is patentable over the references cited with particularity required by 37 CFR 1.111(b) and (c);

6.4. a concise statement of the utility of the invention as defined in each of the independent claims (unless the application is a design application);

6.5. a showing of where each limitation of the claims finds support under 35 USC 112, first paragraph, in the written description of the specification. If applicable, the showing must also identify: (1) each means- (or step) plus-function claim element that invokes consideration under 35 USC 112, sixth paragraph; and (2) the structure, material, or acts in the specification that corresponds to each means- (or step) plus-function claim element that invokes

consideration under 35 USC 112, sixth paragraph; if the application claims the benefit of one or more applications under title 35, United States Code, the showing must also include where each limitation of the claims finds support under 35 USC 112, first paragraph, in each such application in which such supports exists;

6.6. an identification of any cited references that may be disqualified under 35 USC 103(c).

REVIEW OF FACTS

The petition in this case fails to comply with conditions II.5.1 and II.5.2

Condition II.5.1 requires that the search involve U.S. patents and patent application publications, foreign patent documents, and non-patent literature, unless the applicant can justify with reasonable certainty that no references more pertinent than those already identified are likely to be found in the eliminated sources and includes such a justification with this statement. Applicant did not search most of the database files suggested by the search template or equivalent. Applicant is reminded that search templates, specific to each class/subclass, may be found at http://www.uspto.gov/web/patents/searchtemplates/. For example, the instant application is best classified in 705/7 (see http://www.uspto.gov/web/patents/searchtemplates/class705-007.htm) some of the more relevant search areas would include a text search in the listed Non-Patent Literature database files. A comprehensive list recommended database files is found on the 705/007 search template web page as well. Especially relevant to the claimed subject matter are database files such as:

ABI/Inform
ACM Digital Library
Business & Industry TM (B&I)
Business Wire
Dialog Global Reporter
EBSCOhost Research Databases
Examiner's Electronic Digest Database
Gale Group Computer DatabaseTM
Gale Group GlobalbaseTM
Gale Group New Product Announcements/Plus (NPA/Plus)
Gale Group Newsletter DatabaseTM
Gale Group Prompt
Gale Group Trade & Industry DatabaseTM
Inside Conferences
Inspec (The Database for Physics, Electronics and Computing)
JSTOR Journals
McGraw-Hill Companies Publications Online
Proquest Direct

TecinfoSource (formely SoftBase: Reviews, Companies, and Products)
Wall Street Journal Abstracts

As per Condition II.5.2, the preexamination search must be directed to the claimed invention and encompass all of the features of the claims, giving the claims the broadest reasonable interpretation. Applicant's searches are very broad and do not focus on many of the recited claim details. For example, section 9(c) of the Support Document (Detailed Explanation of Patentability) states that the references fail to teach or suggest storing the information from the metadata server in a local metadata cache.

Applicant notes that the references fail to teach or suggest that retrieval of information from a metadata server occurs when the event probe is installed at the monitoring agent. Applicant further notes that the references fail to teach or suggest enriching the event with the information stored in the local metadata cache, and enriching the event with the information stored in the local metadata cache. However, looking at the text searches performed in West, these concepts are not adequately searched.

A recommended search might be executed in all databases of West with the following search queries:

L1: (monitor$ or track$) same (agent$1 or representative$) near5 (end adj point$ or event$1)
L2: L1 and (((stor$4 or database$ or DB or repository$) same (information or data)) near5 (server$ or metadata$ or cache$1))
L3: L2 and (retriev$ or extract$ or pull$ or enrich$)

Please keep in mind that these are non-limiting search suggestions and they are only meant to serve as a possible starting point for Applicant's preexamination search. Additional guidance regarding the proper manner of performing and documenting a preexamination search may be found on the following web site: http://www.uspto.gov/web/patents/accelerated/ Applicant is expected to perform more supplemental searches than the sample search queries listed above.
Further, Applicant has overly limited the searches (page 2 of the Pre-Examination Search Document) by limiting the text searches to the abstract, title and claim.

DECISION

For the above stated reasons, the petition is **DISMISSED**. The application will therefore be taken up by the examiner for action in its regular turn.

Petitioner is given a single opportunity to perfect the petition. Any request for reconsideration of this decision must be submitted within one (1) month or thirty (30) days, whichever is longer, from the date of this decision. No extensions of time will be granted under 37 CFR 1.136(a) if the request is to be considered timely. Any request for reconsideration must address the deficiencies indicated above.

Petitioner is reminded that, upon granting of the special status of the application on request for reconsideration, the application will be processed expeditiously. However, due to the dismissal of the instant petition, examination may not be completed within twelve months of the filing date of the application.

Any inquiry regarding this decision should be directed to Robert Weinhardt, Business Practice Specialist, at (571) 272-6633, or Romain Jeanty, at (571) 272-6732.

C. Michelle Tarae for

Robert A. Weinhardt,
Business Practice Specialist
Technology Center 3600

RW/RJ/ 9/23/08

UNITED STATES PATENT AND TRADEMARK OFFICE

UNITED STATES DEPARTMENT OF COMMERCE
United States Patent and Trademark Office
Address: COMMISSIONER FOR PATENTS
P.O. Box 1450
Alexandria, Virginia 22313-1450
www.uspto.gov

APPLICATION NO.	FILING DATE	FIRST NAMED INVENTOR	ATTORNEY DOCKET NO.	CONFIRMATION NO.
12/195,740	08/21/2008	Giancarlo CARBONE	FR920080119US1_1963-8054	9054

79395 7590 11/20/2008
MORGAN & FINNEGAN LLP
3 WORLD FINANCIAL CENTER
NEW YORK, NY 10281-2101

EXAMINER

ART UNIT	PAPER NUMBER
3623	

MAIL DATE	DELIVERY MODE
11/20/2008	PAPER

Please find below and/or attached an Office communication concerning this application or proceeding.

The time period for reply, if any, is set in the attached communication.

UNITED STATES PATENT AND TRADEMARK OFFICE

Commissioner for Patents
United States Patent and Trademark Office
P.O. Box 1450
Alexandria, VA 22313-1450
www.uspto.gov

MAILED FROM
DIRECTORS OFFICE

NOV 20 2008

TECHNOLOGY CENTER

MORGAN & FINNEGAN LLP
3 WORLD FINANCIAL CENTER
NEW YORK NY 10281-2101

In re application of : **DECISION ON PETITION**
Carbone et al. : **TO MAKE SPECIAL FOR**
Application No. 12/195,740 : **NEW APPLICATION**
Filed: August 21, 2008 : **UNDER 37 CFR 1.102**
For: METHOD AND SYSTEM FOR FOCUSED AND SCALABLE EVENT ENRICHMENT FOR COMPLEX IMS SERVICE MODELS

This is a decision on the renewed petition filed on October 24, 2008 to make the above-identified application special for accelerated examination procedure under 37 C.F.R. § 1.102(d).

The petition to make the application special is **DENIED**.

A petition to make special was filed in the above-identified application under 37 CFR 1.102(d) on August 21, 2008. That petition was dismissed in a decision mailed September 26, 2008 wherein a non-extendible period of 1 (one) month or 30 (thirty) days, whichever was longer, was set to request reconsideration.

The reasons for the dismissal included a finding of an inadequate Search Document.

With the updated Search Document filed October 24, 2008, applicant has successfully remedied the issues raised in the dismissal with respect to the template search, however has not sufficiently addressed all of the issues raised regarding the originally filed Search Document.

Specifically, the dismissal indicated that, per Condition II.5.2, that the pre-examination search must be directed to the claimed invention and encompass all of the features of the claims, giving the clams the broadest reasonable interpretation. The dismissal stated that Applicant's searches were very broad and did not focus on many of the recited claim details such as "storing the information from the metadata server in a local metadata cache", "retrieval of information from a metadata server occurs when the event probe is installed at the monitoring agent" and "enriching the event with the information stored in the local metadata cache, and enriching the event with the information stored in the local metadata cache". The dismissal gave a recommended search string as a starting point, to search for these features. The updated search

report fails to address this issue, as the search was not updated with these features, nor is there any argument or discussion that these features were already searched. The applicant simply updates the NPL search to search the recommended databases, however none of the searches have been updated to search the claimed features which the applicant has stated the prior art fails to teach as indicated in the dismissal. Therefore, since the search has not sufficiently addressed the issue of not focusing on many of the claimed details, Condition II.5.2, still has not been met.

For the above stated reasons, the petition is **DENIED**. The application will therefore be taken up by the examiner for action in its regular turn.

Petitioner is reminded that a only single opportunity to perfect the petition is given. Therefore, further petitions for accelerated examination in this application will not be entertained.

Any inquiry regarding this decision should be directed to Robert Weinhardt at (571) 272-6633 or C. Michelle Tarae at (571) 272-6727, both Business Practice Specialists or Jamisue Plucinski, Primary Examiner at (571) 272-6811.

C. Michelle Tarae

C. Michelle Tarae
Business Practice Specialist
Technology Center 3600

CMT/JP/11/18/08

UNITED STATES PATENT AND TRADEMARK OFFICE

Commissioner for Patents
United States Patent and Trademark Office
P.O. Box 1450
Alexandria, VA 22313-1450
www.uspto.gov

TOWNSEND AND TOWNSEND AND CREW, LLP
TWO EMBARCADERO CENTER
EIGHTH FLOOR
SAN FRANCISCO, CA 94111-3834

MAILED

JUL 27 2009

OFFICE OF PETITIONS

In re Application of	:	
Scott Andrew Snyder	:	DECISION ON PETITION
Application No. 12/195,752	:	TO WITHDRAW
Filed: August 21, 2008	:	FROM RECORD
Attorney Docket No. 026970-005511US	:	

This is a decision on the Request to Withdraw as attorney or agent of record under 37 C.F.R. § 1.36(b), filed June 18, 2009.

The request is **NOT APPROVED** because it is moot.

A review of the file record indicates that on July 8, 2009 the power of attorney was revoked by the assignee of the patent application. Accordingly, the request to withdraw under 37 C.F.R. § 1.36(b) is moot.

All future communications from the Office will be directed to the below-listed address until otherwise notified by applicant.

Telephone inquires concerning this decision should be directed to the undersigned at 571-272-7751. All other inquires concerning either the examination or status of the application should be directed to the Technology Center.

Joan Olszewski

Joan Olszewski
Petitions Examiner
Office of Petitions

cc: Darby & Darby P.C.
P.O. Box 770
Church Street Station
New York NY 10008-0770

UNITED STATES PATENT AND TRADEMARK OFFICE

Commissioner for Patents
United States Patent and Trademark Office
P.O. Box 1450
Alexandria, VA 22313-1450
www.uspto.gov

DARBY & DARBY P.C.
P.O. BOX 770
CHURCH STREET STATION
NEW YORK, NY 10008-0770

COPY MAILED
FEB 12 2010

In re Application of	:	
Scott Andrew Snyder	:	
Application No.: 12/195,752	:	ON PETITION
Filed: August 21, 2008	:	
Attorney Docket No.: 21490/1212378-US2	:	

This is a decision on the petition, filed February 9, 2010, under 37 CFR 1.313(c)(2) to withdraw the above-identified application from issue after payment of the issue fee.

The petition is **GRANTED**.

The above-identified application is withdrawn from issue for consideration of a submission under 37 CFR 1.114 (request for continued examination). See 37 CFR 1.313(c)(2).

Petitioner is advised that the issue fee paid on January 18, 2010, cannot be refunded. If, however, this application is again allowed, petitioner may request that it be applied towards the issue fee required by the new Notice of Allowance.[1]

Telephone inquiries relating to this decision should be directed to the undersigned at (571) 272-3204.

The application is being referred to Technology Center AU 3695 for further processing of the request for continued examination under 37 CFR 1.114 and for consideration of the concurrently filed Information Disclosure Statement (IDS).

/SDB/

Sherry D. Brinkley
Petitions Examiner
Office of Petitions

[1] *The request to apply the issue fee to the new Notice may be satisfied by completing and returning the new Part B – Fee(s) Transmittal Form (along with any balance due at the time of submission). Petitioner is advised that the Issue Fee Transmittal Form must be completed and timely submitted to avoid abandonment of the application.*

UNITED STATES PATENT AND TRADEMARK OFFICE

UNITED STATES DEPARTMENT OF COMMERCE
United States Patent and Trademark Office
Address: COMMISSIONER FOR PATENTS
P.O. Box 1450
Alexandria, Virginia 22313-1450
www.uspto.gov

APPLICATION NO.	FILING DATE	FIRST NAMED INVENTOR	ATTORNEY DOCKET NO.	CONFIRMATION NO.
12/195,767	08/21/2008	Yoshihiro Kaneko	008312-0373342	9093

909 7590 04/21/2010
PILLSBURY WINTHROP SHAW PITTMAN, LLP
P.O. BOX 10500
MCLEAN, VA 22102

EXAMINER

ART UNIT	PAPER NUMBER
2627	

MAIL DATE	DELIVERY MODE
04/21/2010	PAPER

Please find below and/or attached an Office communication concerning this application or proceeding.

The time period for reply, if any, is set in the attached communication.

UNITED STATES PATENT AND TRADEMARK OFFICE

Commissioner for Patents
United States Patent and Trademark Office
P.O. Box 1450
Alexandria, VA 22313-1450
www.uspto.gov

PILLSBURY WINTHROP SHAW PITTMAN, LLP
P.O. BOX 10500
MCLEAN VA 22102

In re Application of KANEKO, YOSHIHIRO Application No. 12/195,767 Filed: August 21, 2008 Attorney Docket No. **008312-0373342**	: : : : : : :	DECISION ON REQUEST TO PARTICIPATE IN PATENT PROSECUTION HIGHWAY PROGRAM AND PETITION TO MAKE SPECIAL UNDER 37 CFR 1.102(d)

This is a decision on the request to participate in the Patent Prosecution Highway (PPH) program and the petition under 37 CFR 1.102(d), filed February 1, 2010 to make the above-identified application special.

The request and petition are **GRANTED**.

A grantable request to participate in the PPH program and petition to make special require:

(1) The U.S. application must validly claim priority under 35 U.S.C. 119(a) to one or more applications filed in the JPO;
(2) Applicant must submit a copy of the allowable/patentable claim(s) from the JPO application(s) along with an English translation thereof and a statement that the English translation is accurate;
(3) All the claims in the U.S. application must sufficiently correspond or be amended to sufficiently correspond to the allowable/patentable claim(s) in the JPO application(s);
(4) Examination of the U.S. application has not begun;
(5) Applicant must submit a copy of all the office actions from each of the JPO application(s) containing the allowable/patentable claim(s) along with an English translation thereof and a statement that the English translation is accurate;
(6) Applicant must submit an IDS listing the documents cited by the JPO examiner in the JPO office action along with copies of documents except U.S. patents or U.S. patent application publications; and
(7) The required petition fee under 37 CFR 1.17(h).

The request to participate in the PPH program and petition comply with the above requirements. Accordingly, the above-identified application has been accorded "special" status.

Telephone inquiries concerning this decision should be directed to Doris To at 571-272-7629.

All other inquiries concerning the examination or status of the application should be directed to Patent Application Information Retrieval (PAIR) system.

The application is being forwarded to the examiner for action on the merits commensurate with this decision.

/Doris To/

Doris To
Quality Assurance Specialist
Technology Center 2600
Communications

D.2e

UNITED STATES PATENT AND TRADEMARK OFFICE

Commissioner for Patents
United States Patent and Trademark Office
P.O. Box 1450
Alexandria, VA 22313-1450
www.uspto.gov

MAIL

DEC 23 2008
DIRECTOR'S OFFICE
TECHNOLOGY CENTER 2600

Oppenheimer Wolff & Donnelly LLP
Plaza VII, Suite 3300
45 South Seventh Street
Minneapolis MN 55402-1609

In re Application of:
AMIR, ARNON, et al.
Serial No.: 12/195,904
Filed: August 21, 2008
Docket: **ARC920080036US1**
Title: **METHOD FOR CREATING AND MAINTAINING THREADS OF PHONE/EMAIL/FAX/SMS CONVERSATIONS**

DECISION ON PETITION TO MAKE SPECIAL FOR NEW APPLICATION UNDER 37 C.F.R. § 1.102 & M.P.E.P. § 708.02

The petition to make the application special is **GRANTED**.

The application is eligible for accelerated examination and the petition complies with the conditions for granting the application special status pursuant to the "Change to Practice for Petitions in Patent Applications to Make Special and for Accelerated Examination" published June 26, 2006, in the Federal Register. (71 Fed. Reg. 36323).

The prosecution of the instant application will be conducted expeditiously according to the following guidelines.

1. The application will be docketed to an examiner and taken up for action within two weeks of the date of this decision.

2. Restriction Practice:
   If the examiner determines that the claims are not directed to a single invention, a telephone request to elect one single invention will be made pursuant to MPEP 812.01. As a prerequisite to the grant of this petition, the applicant has agreed to make an oral election, by telephone, without traverse. If the applicant refuses to make an election without traverse, or the examiner cannot reach the applicant after a reasonable effort, the examiner will treat the first claimed invention (invention defined by claim 1) as having being constructively elected without traverse for examination.

3. Office action:

If it is determined that, after appropriate consultation, there is a potential rejection or any other issue to be addressed, the examiner will telephone the applicant and arrange an interview to discuss and resolve the issue. An Office action, other than a Notice of Allowance and Fee(s) Due (Notice of Allowance), will not be issued unless either: 1) an interview was conducted but did not result in agreed to action that places the application in condition for allowance, or, 2) a determination is made that an interview would be unlikely to result in the application being placed in condition for allowance, and 3) an internal conference has been held to review any rejection of any claim.

4. Time for Reply:
An Office action other than a Notice of Allowance or a final Office action will set a shortened statutory period of one month or thirty days, whichever is longer, for reply with no extension of time available under 37 CFR 1.136(a). Failure to timely file a reply within this non-extendible period for reply will result in the abandonment of the application.

5. Reply by Applicant:
A timely reply to an Office action other than the Notice of Allowance must be submitted electronically via EFS or EFS-web and limited to addressing the rejections, objections and requirement made. Any amendment that attempts to: 1) add claims which would result in more than three pending independent claims or more than twenty pending total claims; 2) present claims not encompassed by the pre-examination search or an updated accelerated examination support document; or 3) present claims that are directed a non-elected invention or an invention other than that previously claimed and examined in the application, will be treated as not fully responsive and will not be entered.

   For any amendment to the claims (including any new claim) that is not encompassed by the accelerated examination support document, applicant must provide an updated accelerated examination support document that encompasses the amended or new claims at the time of filing of the amendment.

   To proceed expeditiously with the examination, it is recommended that a reply with amendments made to any claim or with any new claim being added be accompanied by an updated accelerated examination support document or a statement explaining how the amended or new claim is supported by the original accelerated examination support document.

6. Information Disclosure Statement (IDS):
Any IDS filed during prosecution must be submitted electronically via EFS or EFS-web, accompanied by an updated accelerated examination support document, and be in compliance with 37 CFR 1.97 and 1.98.

7. Post-Allowance Processing:
To expedite processing of the allowed application into a patent, the applicant must: 1) pay the required fees within one month of the date of the Notice of Allowance, and 2) not

file any post allowance papers not required by the Office. In no event may the issue fee be paid and accepted later than three months from the date of the Notice of Allowance.

8. After-Final and Appeal Procedures:
   To expedite prosecution, after receiving the final Office action, applicant must: 1) promptly file a notice of appeal, an appeal brief and appeal fees; and 2) not request a pre-appeal brief conference.

   Any amendment, affidavit or other evidence filed after final Office action must comply with applicable rules and the requirements outlined in numbered paragraphs 5 and 6 above.

   On appeal, the application will proceed according to normal appeal procedures. After appeal, the application will again be treated special.

9. Proceedings Outside the Normal Examination Process:
   If the application becomes involved in a proceeding that is outside the normal examination process (e.g., a secrecy order, national security review, interference proceeding, petitions under 37 CFR 1.181, 182 or 183), the application will be treated special before and after such proceeding.

10. Final Disposition:
    The twelve month goal of this accelerated examination procedure ends with a final disposition. The mailing of a final Office action, a Notice of Allowance, the filing of a Notice of Appeal, or the filing of a Request for Continued Examination (RCE) is the final disposition.

If, during prosecution, a paper is not filed electronically using EFS-web, a reply is filed but is not fully responsive, the application is involved in an appeal, or a proceeding outside normal examination process, the application will still be examined expeditiously, however, the final disposition may occur more than twelve months from the filing of the application.

Any inquiry regarding this decision should be directed to Ken Wieder, Quality Assurance Specialist, at (571) 272-2986.

Kenneth A. Wieder
Quality Assurance Specialist
Technology Center 2600 Communications

UNITED STATES PATENT AND TRADEMARK OFFICE

Commissioner for Patents
United States Patent and Trademark Office
P.O. Box 1450
Alexandria, VA 22313-1450
www.uspto.gov

TERADYNE INC
c/o FOLEY & LARDER LLP
111 HUNTINGTON AVENUE
26TH FLOOR
BOSTON MA 02199-7610

COPY MAILED
MAR 30 2009
OFFICE OF PETITIONS

In re Application of	:	
Arash Behziz	:	
Application No. 12/195,928	:	DECISION REFUSING STATUS
Filed: August 21, 2008	:	UNDER 37 CFR 1.47(b)
Attorney Docket No. 077311-0181	:	

This is in response to the petition under 37 CFR 1.47(b), filed March 5, 2009.

The petition under 37 C.F.R. § 1.47(b) is **DISMISSED**.

Rule 47 applicant is given TWO MONTHS from the mailing date of this decision to reply, correcting the below-noted deficiencies. Any reply should be entitled "Request for Reconsideration of Petition Under 37 C.F.R. § 1.47(b)," and should only address the deficiencies noted below, except that the reply may include an oath or declaration executed by the non-signing inventor. **Failure to respond will result in abandonment of the application.** Any extensions of time will be governed by 37 C.F.R. § 1.136(a).

A grantable petition under 37 C.F.R. § 1.47(b) requires: (1) proof that the non-signing inventor cannot be reached or refuses to sign the oath or declaration after having been presented with the application papers (specification, claims and drawings); (2) an acceptable oath or declaration in compliance with 37 C.F.R. § 1.63; (3) the petition fee; (4) a statement of the last known address of the non-signing inventor; (5) proof that the Rule 47(b) applicant has sufficient proprietary interest in the

subject matter to justify the filing of the application; and (6) proof of irreparable damage. The instant petition does not satisfy requirements (2), (5), and (6).

As to requirement (2), Rule 47 applicant has not submitted an acceptable oath or declaration. As set forth in MPEP 409.03(b), the "37 CFR 1.47(b) applicant must make the oath required by 37 CFR 1.63 and 1.64 or 1.175." The title or position of the person signing must be stated if signing on behalf of a corporation. A corporation may authorize any person, including a registered attorney or agent, to sign the oath or declaration on its behalf. Where an oath or declaration is signed by a registered attorney or agent on behalf of a corporation, proof of the attorney's or agent's authority in the form of a statement signed by the appropriate corporate officer must be submitted, or the attorney or agent can simply state that he or she is authorized to sign on behalf of the corporation. Here, the declaration was signed by attorney Maraia. However, Maraia did not include proof of his authority to sign (e.g. a Rule 3.73(b) Statement), nor did Maraia include a statement that he was authorized to sign on behalf of the assignee.

As to requirement (5), applicant has not shown a sufficient proprietary interest with respect to the nonsigning inventor. Rule 47 applicant has not submitted a copy of an assignment from the non-signing inventor or a copy of an employment agreement.

If applicant can not show a sufficient proprietary interest by supplying a copy of the assignment for the above-identified application (or a copy of an agreement to assign, e.g. an employment agreement), a proprietary interest "may be demonstrated by an appropriate legal memorandum to the effect that a court of competent jurisdiction (federal, state, or foreign) would by the weight of authority in that jurisdiction award title of the invention to the 37 CFR 1.47(b) applicant."[1]

As to requirement (6), irreparable damage may be established by a statement that a filing date is necessary to preserve the rights of the party or to prevent irreparable damage. See MPEP 409.03(g).

A petition under 37 CFR 1.47 requires a petition fee of $200. Petitioner submitted $130. Accordingly, the balance of $70 has been charged to Deposit Account No. 19-0741, as authorized.

MPEP 409.03(f).

Further correspondence with respect to this matter should be addressed as follows:

By mail: Mail Stop Petitions
Commissioner for Patents
P.O. Box 1450
Alexandria VA 22313-1450

By FAX: (571)273-8300
Attn: Office of Petitions

Telephone inquiries related to this decision may be directed to the undersigned at (571)272-3207.

Cliff Congo
Petitions Attorney
Office of Petitions

UNITED STATES PATENT AND TRADEMARK OFFICE

Commissioner for Patents
United States Patent and Trademark Office
P.O. Box 1450
Alexandria, VA 22313-1450
www.uspto.gov

TERADYNE INC
c/o FOLEY & LARDER LLP
111 HUNTINGTON AVENUE
26TH FLOOR
BOSTON MA 02199-7610

COPY MAILED

MAY 15 2009

OFFICE OF PETITIONS

In re Application of	:
Arash Behziz	: DECISION NOTING JOINDER
Application No. 12/195,928	: OF INVENTOR AND PETITION
Filed: August 21, 2008	: UNDER 37 CFR 1.47(b) MOOT
Attorney Docket No. 077311-0181	:

This is in response to the renewed petition under 37 CFR 1.47(b), filed April 6, 2009.

In view of the **joinder** of the inventor, consideration under 37 CFR 1.47(b) is not necessary and the petition is considered to be **moot**. This application does not have any Rule 1.47(b) status and no such status should appear on the file wrapper. This application need not be returned to this Office for further consideration under 37 CFR 1.47(b).

The application is being forwarded to the Office of Patent Application Processing for pre-examination processing.

Telephone inquiries related to this decision may be directed to the undersigned at (571)272-3207.

Cliff Congo
Petitions Attorney
Office of Petitions

UNITED STATES PATENT AND TRADEMARK OFFICE

Commissioner for Patents
United States Patent and Trademark Office
P.O. Box 1450
Alexandria, VA 22313-1450
www.uspto.gov

TERADYNE, INC.
C/O FOLEY & LARDER, LLP
111 HUNTINGTON AVENUE
26TH FLOOR
BOSTON, MA 02199-7610

MAILED

JUN 0 1 2010

OFFICE OF PETITIONS

In re Application of	:	
BEHZIZ, Arash	:	
Application No. 12/195,928	:	DECISION ON PETITION
Filed: August 21, 2008	:	TO WITHDRAW
Attorney Docket No. **T0529.70093US00**	:	FROM RECORD
	:	

This is a decision on the Request to Withdraw as attorney or agent of record under 37 C.F.R. § 1.36(b), filed April 23, 2010.

The request is not approved because it is **moot**.

A review of the file record indicates that the power of attorney to C/O FOLEY & LARDER, LLP has been revoked by the assignee of the patent application on April 15, 2010. Accordingly, the request to withdraw under 37 C.F.R. § 1.36(b) is moot.

All future communications from the Office will continue to be directed to the below-listed address until otherwise notified by applicant.

Telephone inquires concerning this decision should be directed to Tredelle Jackson at 571-272-2783.

/Tredelle D. Jackson/
Paralegal Specialist
Office of Petitions

cc: **TERADYNE, INC.**
c/o WOLF, GREENFIELD & SACKS, P.C.
600 ATLANTIC AVENUE
BOSTON MA 02210-2206

UNITED STATES PATENT AND TRADEMARK OFFICE

Commissioner for Patents
United States Patent and Trademark Office
P.O. Box 1450
Alexandria, VA 22313-1450
www.uspto.gov

PAUL D. YASGER
ABBOTT LABORATORIES
100 ABBOTT PARK ROAD
DEPT. 377/AP6A
ABBOTT, PARK IL 60064-6008

COPY MAILED
JAN 20 2010

In re Application of	:	
R. Scott Bitner, et al.	:	
Application No. 12/195,937	:	DECISION ON PETITION
Filed: August 21, 2008	:	UNDER 37 CFR 1.78(a)(3) AND (a)(6)
Attorney Docket No. 9047USO1	:	

This is a decision on the renewed petition, filed November 7, 2009, which is being treated as a petition under 37 CFR §§ 1.78(a)(3) and 1.78(a)(6) to accept an unintentionally delayed claim under 35 U.S.C. §§ 120 and 119(e) for benefit of priority to the prior-filed applications set forth in the concurrently filed amendment.

The renewed petition is not signed by a registered attorney or agent of record. However, in accordance with 37 CFR 1.34(a), the signature of Lisa V. Mueller appearing on the petition shall constitute a representation to the United States Patent and Trademark Office that he is authorized to represent the particular party on whose behalf he acts. A courtesy copy of this decision is being mailed to petitioner at the address on the petition. However, if Ms. Mueller desires to receive future correspondence regarding this application, the appropriate power of attorney or authorization of agent must be submitted. All future correspondence regarding this application file will be directed solely to the address of record.

The petition is **DISMISSED.**

A petition for acceptance of a claim for late priority under 37 CFR §§ 1.78(a)(3) and 1.78(a)(6) is only applicable to those applications filed on or after November 29, 2000. Further, the petition is appropriate only after the expiration of the period specified in 37 CFR §§ 1.78(a)(2)(ii) and 1.78(a)(5)(ii). In addition, the petition under 37 CFR §§ 1.78(a)(3) and 1.78(a)(6) must be accompanied by:

(1) the reference required by 35 U.S.C. §§ 120 and 119(e) and 37 CFR §§ 1.78(a)(2)(i) and 1.78(a)(5)(i) of the prior-filed application, unless previously submitted;

(2) the surcharge set forth in § 1.17(t); and

(3) a statement that the entire delay between the date the claim was due under 37 CFR §§ 1.78(a)(2)(ii) and 1.78(a)(5)(ii) and the date the claim was filed was unintentional. The Director may require additional information where there is a question whether the delay was unintentional.

The petition does not comply with item (1). Upon review of the prior applications cited in the amendment filed November 7, 2009, it is noted that the present application is indicated as a continuation-in-part application of Application No. 12/197,760 filed August 25, 2008. However, Application No. 12/197,760 is not a prior filed application. Consequently, it would be improper for the present application to claim benefit thereto.

Before the petition can be granted, a renewed petition under 37 CFR § 1.78(a)(3) and 1.78(a)(6), an Application Data Sheet or a substitute amendment (complying with 37 CFR 1.121 and 37 CFR 1.76(b)(5)) are required.

Further correspondence with respect to this matter should be delivered through one of the following mediums:

By mail: Mail Stop PETITIONS
Commissioner for Patents
Post Office Box 1450
Alexandria, VA 22313-1450

By hand: Customer Service Window
Mail Stop Petitions
Randolph Building
401 Dulany Street
Alexandria, VA 22314

By fax: (571) 273-8300
ATTN: Office of Petitions

By Internet: EFS-Web[1]

[1] www.uspto.gov/ebc/efs_help.html (for help using EFS-Web call the Patent Electronic Business Center at (866) 217-9197)

Any questions concerning this matter may be directed to the undersigned at (571) 272-3204.

Sherry D. Brinkley
Petitions Examiner
Office of Petitions

cc: LISA V. MUELLER
POLSINELLI SHUGHART PC
180 N STETSON AVE., SUITE 4525
CHICAGO, IL 60601

UNITED STATES PATENT AND TRADEMARK OFFICE

Commissioner for Patents
United States Patent and Trademark Office
P.O. Box 1450
Alexandria, VA 22313-1450
www.uspto.gov

PAUL D. YASGER
ABBOTT LABORATORIES
100 ABBOTT PARK ROAD
DEPT. 377/AP6A
ABBOTT PARK, IL 60064-6008

MAILED

OCT 0 1 2009

OFFICE OF PETITIONS

In re Application of	:	
R. Scott Bitner, et al.	:	
Application No. 12/195,937	:	DECISION DISMISSING PETITIONS
Filed: August 21, 2008	:	UNDER 37 CFR 1.78(a)(3) AND (a)(6)
Attorney Docket No. 9047USO1	:	

This is a decision on the petition under 37 CFR §§ 1.78(a)(3) and 1.78(a)(6), filed January 19, 2009, to accept an unintentionally delayed claim under 35 U.S.C. §§ 120 and 119(e) for the benefit of priority to the prior-filed nonprovisional and provisional applications set forth in the concurrently filed amendment.

The petition is **DISMISSED**

A petition for acceptance of a claim for late priority under 37 CFR §§ 1.78(a)(3) and 1.78(a)(6) is only applicable to those applications filed on or after November 29, 2000 and after the expiration of the period specified in 37 CFR §§ 1.78(a)(2)(ii) and 1.78(a)(5)(ii). In addition, the petition under 37 CFR §§ 1.78(a)(3) and 1.78(a)(6) must be accompanied by:

(1) the reference required by 35 U.S.C. §§ 120 and 119(e) and 37 CFR §§ 1.78(a)(2)(i) and 1.78(a)(5)(i) of the prior-filed application, unless previously submitted;
(2) the surcharge set forth in § 1.17(t); and
(3) a statement that the entire delay between the date the claim was due under 37 CFR §§ 1.78(a)(2)(ii) and 1.78(a)(5)(ii) and the date the claim was filed was unintentional. The Director may require additional where there is a question whether the delay was unintentional.

The petition does not comply with item (1) above. In this regard, the amendment is not acceptable as drafted since it improperly incorporates by reference the prior-filed applications. An incorporation by reference statement added after an application's

filing date is not effective because no new matter can be added to an application after its filing date (*see* 35 U.S.C. § 132(a)). If an incorporation by reference statement is included in an amendment to the specification to add a benefit claim under 35 U.S.C. § 120 after the filing date of the application, the amendment would not be proper. When a benefit claim under 35 U.S.C. § 120 is submitted after the filing of an application, the reference to the prior application cannot include an incorporation by reference statement of the prior application. *See* Dart Industries v. Banner, 636 F.2d 684, 207 USPQ 273 (C.A.D.C. 1980). *Note* MPEP §§ 201.06(c) and 608.04(b).

If reconsideration of this decision is desired, a renewed petition under 37 CFR § 1.78(a)(3) and an Application Data Sheet or an amendment (complying with the provisions of 37 CFR 1.121 and 37 CFR 1.76(b)(5)) to correct the above matters are required.

Further correspondence with respect to this matter should be delivered through one of the following mediums:

By mail: Mail Stop PETITIONS
Commissioner for Patents
Post Office Box 1450
Alexandria, VA 22313-1450

By hand: Customer Service Window
Mail Stop Petitions
Randolph Building
401 Dulany Street
Alexandria, VA 22314

By fax: (571) 273-8300
ATTN: Office of Petitions

By internet: EFS-Web[1]

Any questions concerning this matter may be directed to the undersigned at (571) 272-3204.

Sherry D. Brinkley
Petitions Examiner
Office of Petitions

[1] www.uspto.gov/ebc/efs_help.html (for help using EFS-Web call the Patent Electronic Business Center at (866) 217-9197)

UNITED STATES PATENT AND TRADEMARK OFFICE

Commissioner for Patents
United States Patent and Trademark Office
P.O. Box 1450
Alexandria, VA 22313-1450
www.uspto.gov

MAILED

MAR 12 2010

OFFICE OF PETITIONS

PAUL D. YASGER
ABBOTT LABORATORIES
100 ABBOTT PARK ROAD
DEPT. 377/AP6A
ABBOTT PARK IL 60064-6008

In re Application of	:	
R. Scott Bitner, et al.	:	DECISION ON PETITION
Application No. 12/195,937	:	UNDER 37 CFR 1.78(a)(3) AND
Filed: August 21, 2008	:	UNDER 37 CFR 1.78(a)(6)
Attorney Docket No. 9047USO1	:	

This is a decision on the renewed petition, filed February 1, 2010, which is being treated as a petition under 37 CFR §§ 1.78(a)(3) and 1.78(a)(6) to accept an unintentionally delayed claim under 35 U.S.C. §§120 and 119(e) for the benefit of the prior-filed applications set forth in the concurrently filed amendment.

There is no indication that the petition is signed by a registered patent attorney or patent agent of record. However, in accordance with 37 CFR 1.34, the signature of Mr. Paul A. Jenny appearing on the correspondence shall constitute a representation to the United States Patent and Trademark Office that he is authorized to represent the particular party in whose behalf he acts. If Mr. Jenny desires to receive correspondence regarding this file, the appropriate power of attorney documents must be submitted. A courtesy copy of this decision is being mailed to Mr. Jenny, the petitioner herein. However, until otherwise instructed, all future correspondence regarding this application file will be directed solely to the above-noted correspondence address of record.

The petition is **GRANTED.**

A petition for acceptance of a claim for late priority under 37 CFR §§ 1.78(a)(3) and 1.78(a)(6) is only applicable to those applications filed on or after November 29, 2000. Further, the petition is appropriate only after the expiration of the period specified in 37 CFR §§ 1.78(a)(2)(ii) and 1.78(a)(5)(ii). In addition, the petition under 37 CFR §§ 1.78(a)(3) and 1.78(a)(6) must be accompanied by:

(1) the reference required by 35 U.S.C. §§ 120 and 119(e) and 37 CFR §§1.78(a)(2)(i) and 1.78(a)(5)(i) of the prior-filed application, unless previously submitted;
(2) the surcharge set forth in § 1.17(t); and
(3) a statement that the entire delay between the date the claim was due under 37 CFR §§ 1.78(a)(2)(ii) and 1.78(a)(5)(ii) and the date the claim was filed was unintentional. The

Director may require additional information where there is a question whether the delay was unintentional

Additionally, the instant nonprovisional application must be pending at the time of filing of the reference to the prior-filed provisional application as required by 37 CFR 1.78(a)(5)(ii). Further, the nonprovisional application claiming the benefit of the prior-filed provisional application must have been filed within twelve months of the filing date of the prior-filed provisional application.

All the above requirements having been satisfied, the late claim for benefit of priority under 35 U.S.C. §§ 120 and 119(e) is accepted as being unintentionally delayed.

The granting of the petition to accept the delayed benefit claim to the prior-filed applications under 37 CFR §§ 1.78(a)(3) and 1.78(a)(6) should not be construed as meaning that this application is entitled to the benefit of the filing date of the prior-filed applications. In order for this application to be entitled to the benefit of the prior-filed applications, all other requirements under 35 U.S.C. §§120 and 1.78(a)(1) and (a)(2) and under 35 U.S.C. §119(e) and 37 CFR 1.78(a)(4) and (a)(5) must be met. Similarly, the fact that the corrected Filing Receipt accompanying this decision on petition includes the prior-filed applications should not be construed as meaning that applicant is entitled to the claim for benefit of priority to the prior-filed applications noted thereon. Accordingly, the examiner will, in due course, consider this benefit claim and determine whether the application is entitled to the benefit of the earlier filing date.

A corrected Filing Receipt, which includes the priority claim to the prior-filed applications, accompanies this decision on petition.

Any questions concerning this matter may be directed to the undersigned at (571) 272-3204. All other inquiries concerning either the examination procedures or status of the application should be directed to the Technology Center.

This application is being forwarded to Technology Center Art Unit 1626 for consideration by the examiner of the claim under 35 U.S.C. § §120 and 119(e) of the prior-filed applications.

Sherry D. Brinkley
Petitions Examiner
Office of Petitions

ATTACHMENT : Corrected Filing Receipt

cc: PAUL A. JENNY
POLSINELLI SHUGHART PC
161 N. CLARK ST., SUITE 4200
CHICAGO, IL 60601

UNITED STATES PATENT AND TRADEMARK OFFICE

UNITED STATES DEPARTMENT OF COMMERCE
United States Patent and Trademark Office
Address: COMMISSIONER FOR PATENTS
P.O. Box 1450
Alexandria, Virginia 22313-1450
www.uspto.gov

APPLICATION NUMBER	FILING or 371(c) DATE	GRP ART UNIT	FIL FEE REC'D	ATTY.DOCKET.NO	TOT CLAIMS	IND CLAIMS
12/195,937	08/21/2008	1626	1160	9047USO1	14	1

CONFIRMATION NO. 9417

CORRECTED FILING RECEIPT

OC000000040459693

23492
PAUL D. YASGER
ABBOTT LABORATORIES
100 ABBOTT PARK ROAD
DEPT. 377/AP6A
ABBOTT PARK, IL 60064-6008

Date Mailed: 03/08/2010

Receipt is acknowledged of this non-provisional patent application. The application will be taken up for examination in due course. Applicant will be notified as to the results of the examination. Any correspondence concerning the application must include the following identification information: the U.S. APPLICATION NUMBER, FILING DATE, NAME OF APPLICANT, and TITLE OF INVENTION. Fees transmitted by check or draft are subject to collection. Please verify the accuracy of the data presented on this receipt. **If an error is noted on this Filing Receipt, please submit a written request for a Filing Receipt Correction. Please provide a copy of this Filing Receipt with the changes noted thereon. If you received a "Notice to File Missing Parts" for this application, please submit any corrections to this Filing Receipt with your reply to the Notice. When the USPTO processes the reply to the Notice, the USPTO will generate another Filing Receipt incorporating the requested corrections**

Applicant(s)

R. Scott Bitner, Pleasant Prairie, WI;
Kaitlin E. Browman, Deerfield, IL;
Michael E. Brune, Mundelein, IL;
Yixian Chen, Glenview, IL;
Jurgen Dinges, Wadsworth, IL;
Karla Drescher, Dossenheim, GERMANY;
Peer Jacobson, Libertyville, IL;
Hwan-soo Jae, Glencoe, IL;
Ravi Kurukulasuriya, Groton, CT;
James T. Link, Stanford, CA;
David J. Madar, Miami, FL;
Jyoti R. Patel, Libertyville, IL;
Marina A. Pliushchev, Vernon Hills, IL;
Jeffrey J. Rohde, Evanston, IL;
Lynne E. Rueter, Round Lake Beach, IL;
Qi Shuai, Dekalb, IL;
Bryan K. Sorensen, Antioch, IL;
Jiahong Wang, Lake Bluff, IL;
Karsten M. Wicke, Altrip, GERMANY;
Martin Winn, Deerfield, IL;
Dariusz Wodka, Monmouth Junction, NJ;
Vince Yeh, LaJolla, CA;
Hong Yong, Libertyville, IL;

Assignment For Published Patent Application

ABBOTT LABORATORIES, Abbott Park, IL

Power of Attorney: The patent practitioners associated with Customer Number 23492

Domestic Priority data as claimed by applicant

This application is a CIP of 11/697,044 04/05/2007 PAT 7,435,833
which claims benefit of 60/790,141 04/07/2006
This application 12/195,937
claims benefit of 60/957,082 08/21/2007

Foreign Applications

If Required, Foreign Filing License Granted: 09/02/2008

The country code and number of your priority application, to be used for filing abroad under the Paris Convention, is **US 12/195,937**

Projected Publication Date: Not Applicable

Non-Publication Request: No

Early Publication Request: No

Title

TREATMENT OF CENTRAL NERVOUS SYSTEM DISORDERS

Preliminary Class

514

PROTECTING YOUR INVENTION OUTSIDE THE UNITED STATES

Since the rights granted by a U.S. patent extend only throughout the territory of the United States and have no effect in a foreign country, an inventor who wishes patent protection in another country must apply for a patent in a specific country or in regional patent offices. Applicants may wish to consider the filing of an international application under the Patent Cooperation Treaty (PCT). An international (PCT) application generally has the same effect as a regular national patent application in each PCT-member country. The PCT process **simplifies** the filing of patent applications on the same invention in member countries, but **does not result** in a grant of "an international patent" and does not eliminate the need of applicants to file additional documents and fees in countries where patent protection is desired.

Almost every country has its own patent law, and a person desiring a patent in a particular country must make an application for patent in that country in accordance with its particular laws. Since the laws of many countries differ in various respects from the patent law of the United States, applicants are advised to seek guidance from specific foreign countries to ensure that patent rights are not lost prematurely.

Applicants also are advised that in the case of inventions made in the United States, the Director of the USPTO must issue a license before applicants can apply for a patent in a foreign country. The filing of a U.S. patent application serves as a request for a foreign filing license. The application's filing receipt contains further information and guidance as to the status of applicant's license for foreign filing.

Applicants may wish to consult the USPTO booklet, "General Information Concerning Patents" (specifically, the section entitled "Treaties and Foreign Patents") for more information on timeframes and deadlines for filing foreign patent applications. The guide is available either by contacting the USPTO Contact Center at 800-786-9199, or it can be viewed on the USPTO website at http://www.uspto.gov/web/offices/pac/doc/general/index.html.

For information on preventing theft of your intellectual property (patents, trademarks and copyrights), you may wish to consult the U.S. Government website, http://www.stopfakes.gov. Part of a Department of Commerce initiative, this website includes self-help "toolkits" giving innovators guidance on how to protect intellectual property in specific countries such as China, Korea and Mexico. For questions regarding patent enforcement issues, applicants may call the U.S. Government hotline at 1-866-999-HALT (1-866-999-4158).

LICENSE FOR FOREIGN FILING UNDER

Title 35, United States Code, Section 184

Title 37, Code of Federal Regulations, 5.11 & 5.15

GRANTED

The applicant has been granted a license under 35 U.S.C. 184, if the phrase "IF REQUIRED, FOREIGN FILING LICENSE GRANTED" followed by a date appears on this form. Such licenses are issued in all applications where the conditions for issuance of a license have been met, regardless of whether or not a license may be required as set forth in 37 CFR 5.15. The scope and limitations of this license are set forth in 37 CFR 5.15(a) unless an earlier license has been issued under 37 CFR 5.15(b). The license is subject to revocation upon written notification. The date indicated is the effective date of the license, unless an earlier license of similar scope has been granted under 37 CFR 5.13 or 5.14.

This license is to be retained by the licensee and may be used at any time on or after the effective date thereof unless it is revoked. This license is automatically transferred to any related applications(s) filed under 37 CFR 1.53(d). This license is not retroactive.

The grant of a license does not in any way lessen the responsibility of a licensee for the security of the subject matter as imposed by any Government contract or the provisions of existing laws relating to espionage and the national security or the export of technical data. Licensees should apprise themselves of current regulations especially with respect to certain countries, of other agencies, particularly the Office of Defense Trade Controls, Department of State (with respect to Arms, Munitions and Implements of War (22 CFR 121-128)); the Bureau of Industry and Security, Department of Commerce (15 CFR parts 730-774); the Office of Foreign AssetsControl, Department of Treasury (31 CFR Parts 500+) and the Department of Energy.

NOT GRANTED

No license under 35 U.S.C. 184 has been granted at this time, if the phrase "IF REQUIRED, FOREIGN FILING LICENSE GRANTED" DOES NOT appear on this form. Applicant may still petition for a license under 37 CFR 5.12, if a license is desired before the expiration of 6 months from the filing date of the application. If 6 months has lapsed from the filing date of this application and the licensee has not received any indication of a secrecy order under 35 U.S.C. 181, the licensee may foreign file the application pursuant to 37 CFR 5.15(b).

UNITED STATES PATENT AND TRADEMARK OFFICE

Commissioner for Patents
United States Patent and Trademark Office
P.O. Box 1450
Alexandria, VA 22313-1450
www.uspto.gov

MAILED

APR 12 2010

OFFICE OF PETITIONS

THE NATH LAW GROUP
112 South West Street
Alexandria VA 22314

In re Application of	:	
Ghil Soo Nam et al.	:	
Application No. 12/195,951	:	DECISION ON PETITION
Filed: August 21, 2008	:	TO WITHDRAW
Attorney Docket No. 31109-12	:	FROM RECORD
	:	

This is a decision on the Request to Withdraw as attorney or agent under 37 C.F.R. § 1.36(b) filed January 29, 2010.

The request is **NOT APPROVED**.

The Office will no longer approve requests from practitioners to withdraw from applications where the requesting practitioner is acting, or has acted, in a representative capacity pursuant to 37 CFR 1.34. In these situations, the practitioner is responsible for the correspondence the practitioner files in the application while acting in a representative capacity. As such, there is no need for the practitioner to obtain the Office's permission to withdraw from representation. However, practitioners acting in a representative capacity, like practitioners who have a power of attorney in the application, remain responsible for noncompliance with 37 CFR 1.56, as well as 37 CFR 10.18, with respect to documents they file.

A review of the file record indicates that Joshua B. Goldberg does not have power of attorney in this patent application. See 37 C.F.R. § 10.40. Accordingly, the request to withdraw under 37 C.F.R. § 1.36(b) is not applicable.

All future communications from the Office will continue to be directed to the above-identified address until otherwise properly notified by the applicant.

Telephone inquires concerning this decision should be directed to the undersigned at 571-272-4618

/Kimberly Inabinet/
Kimberly Inabinet
Petitions Examiner
Office of Petitions

UNITED STATES PATENT AND TRADEMARK OFFICE

Commissioner for Patents
United States Patent and Trademark Office
P.O. Box 1450
Alexandria, VA 22313-1450
www.uspto.gov

NIXON PEABODY, LLP
401 9TH STREET, NW
SUITE 900
WASHINGTON, DC 20004-2128

MAILED

JUN 18 2010

OFFICE OF PETITIONS

In re Application	:	
Wayne et al.	:	DECISION ON PETITION
Application No. 12/196,082	:	TO WITHDRAW
Filed: August 21, 2008	:	FROM RECORD
Attorney Docket No. 33016-701.501	:	

This is a decision on the Request to Withdraw as attorney or agent of record under 37 C.F.R. § 1.36(b) filed March 17, 2010, which is being treated as a request to withdraw from employment in a proceeding before the Office under 37 C.F.R. § 10.40.

The request is **DISMISSED**.

A review of the file record indicates that Nixon Peabody LLP was not appointed power of attorney in this patent application, and therefore was only designated as the correspondence address of record. A new Power of Attorney was filed by the assignee of record on May 3, 2010. Accordingly, the request to withdraw under 37 C.F.R. § 1.36(b) is not applicable.

Telephone inquires concerning this decision should be directed to the undersigned at (571) 272-6059. All other inquires concerning either the examination or status of the application should be directed to the Technology Center.

A. Kelley

Alicia Kelley
Petitions Examiner
Office of Petitions

UNITED STATES PATENT AND TRADEMARK OFFICE

UNITED STATES DEPARTMENT OF COMMERCE
United States Patent and Trademark Office
Address: COMMISSIONER FOR PATENTS
P.O. Box 1450
Alexandria, Virginia 22313-1450
www.uspto.gov

APPLICATION NO.	FILING DATE	FIRST NAMED INVENTOR	ATTORNEY DOCKET NO.	CONFIRMATION NO.
12/196,119	08/21/2008	Hidetoshi Yokoi	8073P419	9746

8791 7590 07/20/2009
BLAKELY SOKOLOFF TAYLOR & ZAFMAN LLP
1279 OAKMEAD PARKWAY
SUNNYVALE, CA 94085-4040

EXAMINER
VU, KIEU D

ART UNIT	PAPER NUMBER
2173	

MAIL DATE	DELIVERY MODE
07/20/2009	PAPER

Please find below and/or attached an Office communication concerning this application or proceeding.

The time period for reply, if any, is set in the attached communication.

UNITED STATES PATENT AND TRADEMARK OFFICE

Commissioner for Patents
United States Patent and Trademark Office
P.O. Box 1450
Alexandria, VA 22313-1450
www.uspto.gov

BLAKELY SOKOLOFF TAYLOR & ZAFMAN LLP
1279 OAKMEAD PARKWAY
SUNNYVALE CA 94085-4040

In re Application of: H. YOKOI
Application No. 12/196,119
Filed: August 21, 2008
Atty. Docket No.: 8073P419
For: ELECTRONIC EQUIPMENT AND METHOD FOR DISPLAYING IMAGES

DECISION ON REQUEST TO PARTICIPATE IN PATENT PROSECUTION HIGHWAY PILOT PROGRAM AND PETITION TO MAKE SPECIAL UNDER 37 CFR 1.102(d)

This is a decision on the request to participate in the Patent Prosecution Highway (PPH) program and the petition under 37 CFR 1.102(d), filed June 19, 2009, to make the above-identified application special.

The petition is **GRANTED.**

A grantable request to participate in the PPH program and petition to make special require:

(1) The U.S. application is
(a) a Paris Convention application which either
(i) validly claims priority under 35 U.S.C. 119(a) and 37 CFR 1.55 to one or more applications filed in the JPO, or
(ii) validly claims priority to a PCT application that contains no priority claims,

Or

(b) a national stage application under the PCT (an application which entered the national stage in the U.S. from a PCT international application after compliance with 35 U.S.C. 371), which PCT application
(i) validly claims priority to an application filed in the JPO, or
(ii) validly claims priority to a PCT application that contains no priority claims, or
(iii) contains no priority claim,

Or

(c) a so-called bypass application filed under 35 U.S.C. 111 (a) which validly claims benefit under 35 U.S.C. 120 to a PCT application, which PCT application
(i) validly claims priority to an application filed in the JPO, or
(ii) validly claims priority to a PCT application that contains no priority claims, or
(iii) contains no priority claim.

Where the JPO application that contains the allowable/patentable claims is not the same application for which priority is claimed in the U.S. application, applicant must identify the relationship between the JPO application that contains the allowable/patentable claims and the JPO priority application claimed in the U.S. application.

(2) Applicant must submit a copy of:
a. The allowable/patentable claim(s) from the JPO application(s) or if a copy of the allowable/patentable claims is available via the Dossier Access System (DAS) applicant may request the USPTO obtain a copy from the DAS, however if the USPTO is unable to obtain a copy from the DAS the applicant will be required to submit a copy;
b. An English translation of the allowable/patentable claim(s) and
c. A statement that the English translation is accurate;

(3) Applicant must:
a. Ensure all the claims in the U.S. application must sufficiently correspond or be amended to sufficiently correspond to the allowable/patentable claim(s) in the JPO application(s) and
b. Submit a claims correspondence table in English;

(4) Examination of the U.S. application has not begun;

(5) Applicant must submit:
a. Documentation of prior office action:
i. a copy of the office action(s)just prior to the "Decision to Grant a Patent" from each of the JPO application(s) containing the allowable/patentable claim(s) or
ii. if the allowable/patentable claims(s) are from a "Notification of Reasons for Refusal" then the Notification of Reasons for Refusal or
iii. if the JPO application is a first action allowance then no office action from the JPO is necessary should be indicated on the request/petition form;

Further, if a copy of the documents from a or b above is available via the Dossier Access System (DAS) applicant may request the USPTO obtain a copy from the DAS, however if the USPTO is unable to obtain a copy from the DAS the applicant will be required to submit a copy; b. An English language translation of the JPO Office action from (5)(a)(i)-(ii) above c. A statement that the English translation is accurate;

(6) Applicant must submit:
a. An IDS listing the documents cited by the JPO examiner in the JPO office action (unless already submitted in this application)
b. Copies of the documents except U.S. patents or U.S. patent application publications (unless already submitted in this application);

(7) The required petition fee under 37 CFR 1.17(h).

The request to participate in the PPH pilot program and petition are found to comply with the above requirements. Accordingly, the above-identified application has been accorded "special" status.

Telephone inquiries concerning this decision should be directed to Mano Padmanabhan at 571-272-4210.

All other inquiries concerning the examination or status of the application is accessible in the PAIR system at http://www.uspto.gov/ebc/index.html.

The application is being forwarded to the examiner for action on the merits commensurate with this decision.

/Mano Padmanabhan/

Mano Padmanabhan
Quality Assurance Specialist, Technology Center 2100, Workgroup 2180
571-272-4210

UNITED STATES PATENT AND TRADEMARK OFFICE

UNITED STATES DEPARTMENT OF COMMERCE
United States Patent and Trademark Office
Address: COMMISSIONER FOR PATENTS
P.O. Box 1450
Alexandria, Virginia 22313-1450
www.uspto.gov

APPLICATION NO.	FILING DATE	FIRST NAMED INVENTOR	ATTORNEY DOCKET NO.	CONFIRMATION NO.
12/196,150	08/21/2008	Wei-Lung Wang	JP920070207US1	9798

7590 05/29/2009

Duke W. Yee
Yee & Associates, P.C.
P. O. Box 802333
Dallas, TX 75380

EXAMINER
DAM, TUAN QUANG

ART UNIT	PAPER NUMBER
2192	

MAIL DATE	DELIVERY MODE
05/29/2009	PAPER

Please find below and/or attached an Office communication concerning this application or proceeding.

The time period for reply, if any, is set in the attached communication.

UNITED STATES PATENT AND TRADEMARK OFFICE

Commissioner for Patents
United States Patent and Trademark Office
P.O. Box 1450
Alexandria, VA 22313-1450
www.uspto.gov

Duke W. Yee
Yee & Associates, P.C.
P. O. Box 802333
Dallas TX 75380

In re Application of: Wei-Lung Wang Serial No.: 12/196,150 Filed: August 21, 2008 Docket: JP920070207US1 Title: CHANGE INDICATION FOR A SERVICE OFFERING	DECISION ON PETITION TO MAKE SPECIAL FOR NEW APPLICATION UNDER 37 C.F.R. § 1.102 & M.P.E.P. § 708.02

This is a decision on the petition filed on August 21, 2008 to make the above-identified application special for accelerated examination procedure under 37 C.F.R. § 1.102(d).

The petition to make the application special is GRANTED.

The application is eligible for accelerated examination and the petition complies with the conditions for granting the application special status pursuant to the "Change to Practice for Petitions in Patent Applications to Make Special and for Accelerated Examination" published June 26, 2006, in the Federal Register. (71 Fed. Reg. 36323).

The prosecution of the instant application will be conducted expeditiously according to the following guidelines.

1. The application will be docketed to an examiner and taken up for action within two weeks of the date of this decision.

2. Restriction Practice:
   If the examiner determines that the claims are not directed to a single invention, a telephone request to elect one single invention will be made pursuant to MPEP 812.01. As a prerequisite to the grant of this petition, the applicant has agreed to make an oral election, by telephone, without traverse. If the applicant refuses to make an election without traverse, or the examiner cannot reach the applicant after a reasonable effort, the examiner will treat the first claimed invention (invention defined by claim 1) as having being constructively elected without traverse for examination.

3. Office action:
   If it is determined that, after appropriate consultation, there is a potential rejection or any other issue to be addressed, the examiner will telephone the applicant and arrange an

interview to discuss and resolve the issue. An Office action, other than a Notice of Allowance and Fee(s) Due (Notice of Allowance), will not be issued unless either: 1) an interview was conducted but did not result in agreed to action that places the application in condition for allowance, or, 2) a determination is made that an interview would be unlikely to result in the application being placed in condition for allowance, and 3) an internal conference has been held to review any rejection of any claim.

4. Time for Reply:
An Office action other than a Notice of Allowance or a final Office action will set a shortened statutory period of one month or thirty days, whichever is longer, for reply with no extension of time available under 37 CFR 1.136(a). Failure to timely file a reply within this non-extendible period for reply will result in the abandonment of the application.

5. Reply by Applicant:
A timely reply to an Office action other than the Notice of Allowance must be submitted electronically via EFS or EFS-web and limited to addressing the rejections, objections and requirement made. Any amendment that attempts to: 1) add claims which would result in more than three pending independent claims or more than twenty pending total claims; 2) present claims not encompassed by the pre-examination search or an updated accelerated examination support document; or 3) present claims that are directed a non-elected invention or an invention other than that previously claimed and examined in the application, will be treated as not fully responsive and will not be entered.

   For any amendment to the claims (including any new claim) that is not encompassed by the accelerated examination support document, applicant must provide an updated accelerated examination support document that encompasses the amended or new claims at the time of filing of the amendment.

   To proceed expeditiously with the examination, it is recommended that a reply with amendments made to any claim or with any new claim being added be accompanied by an updated accelerated examination support document or a statement explaining how the amended or new claim is supported by the original accelerated examination support document.

6. Information Disclosure Statement (IDS):
Any IDS filed during prosecution must be submitted electronically via EFS or EFS-web, accompanied by an updated accelerated examination support document, and be in compliance with 37 CFR 1.97 and 1.98.

7. Post-Allowance Processing:
To expedite processing of the allowed application into a patent, the applicant must: 1) pay the required fees within one month of the date of the Notice of Allowance, and 2) not file any post allowance papers not required by the Office. In no event may the issue fee be paid and accepted later than three months from the date of the Notice of Allowance.

8. After-Final and Appeal Procedures:
   To expedite prosecution, after receiving the final Office action, applicant must: 1) promptly file a notice of appeal, an appeal brief and appeal fees; and 2) not request a pre-appeal brief conference.

   Any amendment, affidavit or other evidence filed after final Office action must comply with applicable rules and the requirements outlined in numbered paragraphs 5 and 6 above.

   On appeal, the application will proceed according to normal appeal procedures. After appeal, the application will again be treated special.

9. Proceedings Outside the Normal Examination Process:
   If the application becomes involved in a proceeding that is outside the normal examination process (e.g., a secrecy order, national security review, interference proceeding, petitions under 37 CFR 1.181, 182 or 183), the application will be treated special before and after such proceeding.

10. Final Disposition:
    The twelve month goal of this accelerated examination procedure ends with a final disposition. The mailing of a final Office action, a Notice of Allowance, the filing of a Notice of Appeal, or the filing of a Request for Continued Examination (RCE) is the final disposition.

If, during prosecution, a paper is not filed electronically using EFS-web, a reply is filed but is not fully responsive, the application is involved in an appeal, or a proceeding outside normal examination process, the application will still be examined expeditiously, however, the final disposition may occur more than twelve months from the filing of the application.

Any inquiry regarding this decision should be directed to the undersigned at (571) 272-3719. If attempts to reach the undersigned are unsuccessful, Mano Padmanabhan, Quality Assurance Specialist, can be reached at (571)272-4210.

/Kakali Chaki/

Kakali Chaki, Quality Assurance Specialist
Technology Center 2100

UNITED STATES PATENT AND TRADEMARK OFFICE

UNITED STATES DEPARTMENT OF COMMERCE
United States Patent and Trademark Office
Address: COMMISSIONER FOR PATENTS
P.O. Box 1450
Alexandria, Virginia 22313-1450
www.uspto.gov

APPLICATION NO.	FILING DATE	FIRST NAMED INVENTOR	ATTORNEY DOCKET NO.	CONFIRMATION NO.
12/196,153	08/21/2008	Peter Jonathan Olson	606658-21	9803

29858 7590 11/18/2008
THELEN REID BROWN RAYSMAN & STEINER LLP
PO BOX 640640
SAN JOSE, CA 95164-0640

EXAMINER
LO, WEILUN

ART UNIT	PAPER NUMBER
2179	

MAIL DATE	DELIVERY MODE
11/18/2008	PAPER

Please find below and/or attached an Office communication concerning this application or proceeding.

The time period for reply, if any, is set in the attached communication.

UNITED STATES PATENT AND TRADEMARK OFFICE

Commissioner for Patents
United States Patent and Trademark Office
P.O. Box 1450
Alexandria, VA 22313-1450
www.uspto.gov

Kendrick Patterson
THELEN REID BROWN RAYSMAN &
STEINER LLP
P.O. Box 640640
San Jose, CA 95164-0640

In re Application of:
Peter OLSON
Serial No.: 12/196,153
Filed: August 21, 2008
Attorney Docket: 606658-21
Title: METHODS, SYSTEMS, AND COMPUTER PRODUCTS FOR NAVIGATING A SEQUENCE OF ILLUSTRATIVE SCENES WITHIN A DIGITAL PRODUCTION

DECISION ON PETITION TO MAKE SPECIAL FOR NEW APPLICATION UNDER 37 C.F.R. § 1.102 & M.P.E.P. § 708.02

This is a decision on the petition filed on 21 August 2008 to make the above-identified application special for accelerated examination procedure under 37 C.F.R. § 1.102(d).

The petition to make the application special is **GRANTED**.

The application is eligible for accelerated examination and the petition complies with the conditions for granting the application special status pursuant to the "Change to Practice for Petitions in Patent Applications to Make Special and for Accelerated Examination" published June 26, 2006, in the Federal Register. (71 Fed. Reg. 36323).

The prosecution of the instant application will be conducted expeditiously according to the following guidelines.

1. The application will be docketed to an examiner and taken up for action within two weeks of the date of this decision.

2. Restriction Practice:
   If the examiner determines that the claims are not directed to a single invention, a telephone request to elect one single invention will be made pursuant to MPEP 812.01. As a prerequisite to the grant of this petition, the applicant has agreed to make an oral election, by telephone, without traverse. If the applicant refuses to make an election without traverse, or the examiner cannot reach the applicant after a reasonable effort, the

examiner will treat the first claimed invention (invention defined by claim 1) as having being constructively elected without traverse for examination.

3. Office action:
If it is determined that, after appropriate consultation, there is a potential rejection or any other issue to be addressed, the examiner will telephone the applicant and arrange an interview to discuss and resolve the issue. An Office action, other than a Notice of Allowance and Fee(s) Due (Notice of Allowance), will not be issued unless either: 1) an interview was conducted but did not result in agreed to action that places the application in condition for allowance, or, 2) a determination is made that an interview would be unlikely to result in the application being placed in condition for allowance, and 3) an internal conference has been held to review any rejection of any claim.

4. Time for Reply:
An Office action other than a Notice of Allowance or a final Office action will set a shortened statutory period of one month or thirty days, whichever is longer, for reply with no extension of time available under 37 CFR 1.136(a). Failure to timely file a reply within this non-extendible period for reply will result in the abandonment of the application.

5. Reply by Applicant:
A timely reply to an Office action other than the Notice of Allowance must be submitted electronically via EFS or EFS-web and limited to addressing the rejections, objections and requirement made. Any amendment that attempts to: 1) add claims which would result in more than three pending independent claims or more than twenty pending total claims; 2) present claims not encompassed by the pre-examination search or an updated accelerated examination support document; or 3) present claims that are directed a non-elected invention or an invention other than that previously claimed and examined in the application, will be treated as not fully responsive and will not be entered.

   For any amendment to the claims (including any new claim) that is not encompassed by the accelerated examination support document, applicant must provide an updated accelerated examination support document that encompasses the amended or new claims at the time of filing of the amendment.

   To proceed expeditiously with the examination, it is recommended that a reply with amendments made to any claim or with any new claim being added be accompanied by an updated accelerated examination support document or a statement explaining how the amended or new claim is supported by the original accelerated examination support document.

6. Information Disclosure Statement (IDS):
Any IDS filed during prosecution must be submitted electronically via EFS or EFS-web, accompanied by an updated accelerated examination support document, and be in compliance with 37 CFR 1.97 and 1.98.

7. Post-Allowance Processing:
   To expedite processing of the allowed application into a patent, the applicant must: 1) pay the required fees within one month of the date of the Notice of Allowance, and 2) not file any post allowance papers not required by the Office. In no event may the issue fee be paid and accepted later than three months from the date of the Notice of Allowance.

8. After-Final and Appeal Procedures:
   To expedite prosecution, after receiving the final Office action, applicant must: 1) promptly file a notice of appeal, an appeal brief and appeal fees; and 2) not request a pre-appeal brief conference.

   Any amendment, affidavit or other evidence filed after final Office action must comply with applicable rules and the requirements outlined in numbered paragraphs 5 and 6 above.

   On appeal, the application will proceed according to normal appeal procedures. After appeal, the application will again be treated special.

9. Proceedings Outside the Normal Examination Process:
   If the application becomes involved in a proceeding that is outside the normal examination process (e.g., a secrecy order, national security review, interference proceeding, petitions under 37 CFR 1.181, 182 or 183), the application will be treated special before and after such proceeding.

10. Final Disposition:
    The twelve month goal of this accelerated examination procedure ends with a final disposition. The mailing of a final Office action, a Notice of Allowance, the filing of a Notice of Appeal, or the filing of a Request for Continued Examination (RCE) is the final disposition.

If, during prosecution, a paper is not filed electronically using EFS-web, a reply is filed but is not fully responsive, the application is involved in an appeal, or a proceeding outside normal examination process, the application will still be examined expeditiously, however, the final disposition may occur more than twelve months from the filing of the application.

Any inquiry concerning this decision should be directed to the undersigned whose telephone number is (571) 272-3613.

/ Vincent N. Trans /
Vincent N. Trans, SPRE/QAS
Technology Center 2100
Computer Architecture, Software, and
Information Security

UNITED STATES PATENT AND TRADEMARK OFFICE

COMMISSIONER FOR PATENTS
UNITED STATES PATENT AND TRADEMARK OFFICE
WASHINGTON, DC 20231
www.uspto.gov

Theodore D. Fay, III
Yee & Associates, P.C.
P.O. Box 802333
Dallas, TX 75380

MAIL

MAR 24 2009

DIRECTOR OFFICE
TECHNOLOGY CENTER 2600

In re Application of:
Wang
Serial No.: 12/196,165
Filed: August 21, 2008
Docket: JP920070208US1
For: **Entity Correlation Service**

DECISION ON PETITION TO MAKE SPECIAL FOR NEW APPLICATION UNDER 37 C.F.R. § 1.102 & M.P.E.P. § 708.02

This is a decision on the petition filed on August 21, 2008 to make the above-identified application special for accelerated examination procedure under 37 C.F.R. § 1.102(d).

The petition to make the application special is **DISMISSED**.

REGULATION AND PRACTICE

A grantable petition to make special under 37 C.F.R. § 1.102(d) and pursuant to the "Change to Practice for Petitions in Patent Applications to Make Special and for Accelerated Examination" published in the Federal Register on June 26, 2006 (71 Fed. Reg. 36323), must satisfy the following conditions:

I. Conditions Regarding the Application:

1. the application must be a non-reissue utility or design application filed under 37 CFR 1.111(a);
2. the application, the petition and the required fees must be filed electronically using the USPTO's electronic filing system (EFS), or EFS-web; if not filed electronically, a statement asserting that EFS and EFS-web were not available during the normal business hours.
3. at the time of filing, the application must be complete under 37 CFR 1.51 and in condition for examination;
4. the application must contain three or fewer independent claims and twenty or fewer total claims and the claims must be directed to a single invention.

II. Conditions Regarding the Petition:

The petition must:

1. be filed with the application;
2. include a statement that applicant agrees not to separately argue the patentability of any independent claim during any appeal in the application;

3. include a statement that applicant agrees to make an election without traverse in a telephone interview.

4. include a statement that applicant agrees to conduct such an interview when requested by the examiner.

5. include a statement, made based on a good faith belief, that a preexamination search in compliance with the following requirements, was conducted, including an identification of the filed of search by United States class and subclass, where applicable, and for database searches, the search logic or chemical structure or sequence used as a query, the name of the file(s) searched and the database service, and the date of the search.

The preexamination search must:

5.1 involve U.S. patents and patent application publications, foreign patent documents, and non-patent literature, unless the applicant can justify with reasonable certainty that no references more pertinent than those already identified are likely to be found in the eliminated sources and includes such a justification with this statement;

5.2. be directed to the claimed invention and encompass all of the features of the claims, giving the claims the broadest reasonable interpretation;

5.3. encompass the disclosed features that may be claimed.

6. must provide in support of the petition an accelerated examination support document.

An accelerated examination support document must include:

6.1. an information disclosure statement (IDS) in compliance with 37 CFR 1.98 citing each reference deemed most closely related to the subject matter of each of the claims;

6.2. an identification of all the limitations in the claims that are disclosed by the reference specifying where the limitation is disclosed in the cited reference;

6.3. a detailed explanation of how each of the claims are patentable over the references cited with particularity required by 37 CFR 1.111(b) and (c);

6.4. a concise statement of the utility of the invention as defined in each of the independent claims (unless the application is a design application);

6.5. a showing of where each limitation of the claims finds support under 35 USC 112, first paragraph, in the written description of the specification. If applicable, the showing must also identify: (1) each means- (or step) plus-function claim element that invokes consideration under 35 UDC 112, sixth paragraph; and (2) the structure, material, or acts in the specification that corresponds to each means- (or step) plus-function claim element that invokes consideration under 35 UDC 112, sixth paragraph; if the application claims the benefit of one or more applications under title 35, United States Code, the showing must also include where each limitation of the claims finds support under 35 USC 112, first paragraph, in each such application in which such supports exists;

6.6. an identification of any cited references that may be disqualified under 35 USC 103(c).

REVIEW OF FACTS

The conditions I 1-4, II 1-4 and II 5.1, 5.3, II 6.1, II 6.4 - 6.6 above are considered to have been met. However, the petition fails to comply with conditions II 5.2, II 6.2-6.3 above. Therefore, the petition fails to meet the required conditions to be accorded special status under the accelerated examination procedure.

Regarding the requirement of MPEP § 708.02(a)(I.)(H) and item II.5.2 above, the preexamination search does not encompass all of the features of the claims, and does not appear to have given the claims the broadest reasonable interpretation.

Specifically, the text search strategy should be added to supplement the classified search performed. Here is an example search strategy that would complete this requirement.

1) (receiv$3 same encrypt$3 same ((entity client user) near3 (information ID credential)) and (generat$3 same (new near3 (token ticket)))

2) (return$3 same (new near3 (token ticket)) same (service near3 provider) same ("trusted third party" (trusted near3 party) (third near3 party))

3) ((provid$3 perform$3) same service same (new near3 (token ticket)))

4) (send$3 forward$3 provid$3) same service same (request$2 client user) same (new near3 (token ticket))

This strategy should or rough equivalent should be performed on a database that includes US Patents, US PG Pubs, Foreign Patents and Non Patent Literature.

Or is the default operator. Petitioner should review all claim limitations, especially those asserted as patentable distinctions from the cited references to ensure that the search covers these concepts, and update the search and/or provide any clarifications if deemed necessary.

Finally, based upon the claimed subject matter of the instant application, a search in the following class and subclasses is recommended in order to provide full coverage of where the most pertinent references are most likely to be found: **Class 713 Electrical Computers And Digital Processing Systems: Support Subclass 155** (Central Trusted Authority Provides Computer Authentication), **Subclass 156** (By Certificate), and **Subclass 159** (Including Intelligent Token); **Class 726 Information Security, Subclass 10** (Tickets (e.g., Kerberos or certificates, etc.)) for subject matter related to correlate entities between a service provider and a service requester. This additional search area was confirmed with an examiner in the pertinent art area.

The examination support document is required to discuss each and every limitation in the claims by specifying where the limitations are disclosed in the cited references and for the most part that is properly done. However, part of one of limitations of claim 1 "receiving the encrypted representation of the entity information on the token correlator and generating a new entity token"; and "returning the new token to the service provider and selectively to the authorized third party" are listed in this section as being taught by the Delmond reference but citation as to where these features are taught and therefore correction is needed to meet II 6.2 above.

With regard to the requirement of MPEP § 708.02(a)(I)(2-3) and item 6.3 above, On page 4 of the accelerated examination support document, Petitioners states that the references cited above fail to at least teach or suggest "locating the service of the request by the service provider". However, that limitation is disclosed by Barriga et al. (col. 12: lines 36-40) and by Morris (paragraph 65) on page 2 of the accelerated examination support document, by Emuchay et al. (paragraphs 51-52) on page 3 of the accelerated examination support document and by Delmond et al. (paragraph 77) on page 4 of the accelerated examination support document. Moreover, the references cited above teach "sending the service response to the services requester", however none of the references cited above teaches "sending the service response to the services requester, **including the new entity token**". Appropriate corrections are required.

DECISION

For the above-stated reasons, the petition is **dismissed**. The application will therefore be taken up by the examiner for action in its regular turn.

Petitioner is given a single opportunity to perfect the petition. Any request for reconsideration of this decision must be submitted within 1 (one) month or 30 (thirty) days, whichever is longer, (no extension of time under 37 CFR 1.136(a)) from the date of this decision in order to be considered timely. Any request for reconsideration must address the deficiencies indicated above.

Petitioner is reminded that, upon granting of the special status of the application on request for reconsideration, the application will be processed expeditiously. However, due to the dismissal of the instant petition, examination may not be completed within twelve months of the filing date of the application.

Any inquiry regarding this decision should be directed to Tod Swann, Quality Assurance Specialist, at (571) 272-3612. A second point of contact is QAS Kim Huynh whose number is (571)-272-4147.

Tod R Swann

Technology Center 2400

UNITED STATES PATENT AND TRADEMARK OFFICE

Commissioner for Patents
United States Patent and Trademark Office
P.O. Box 1450
Alexandria, VA 22313-1450
www.uspto.gov

MAILED

MAY 06 2009

TECHNOLOGY CENTER 2100

Theodore D. Fay, III
Yee & Associates, P.C.
P.O. Box 802333
Dallas, TX 75380

In re Application of: Wang Serial No.: 12/196,165 Filed: August 21, 2008 Docket: JP 920070208US1 Title: Entity Correlation Service	DECISION ON PETITION TO MAKE SPECIAL FOR NEW APPLICATION UNDER 37 C.F.R. § 1.102 & M.P.E.P. § 708.02

This is a decision on the renewed petition filed on April 20, 2009 to make the above-identified application special for accelerated examination procedure under 37 C.F.R. § 1.102(d). The original petition, submitted on August 21, 2008 was dismissed in the decision mailed on March 24, 2009.

The renew petition to make the application special is **GRANTED** as the new Search Document meets the requirements of conditions II 5.2 and the new Support Document meets the requirements of conditions II 6.2-6.3 that were deficient in the original petition..

The application is eligible for accelerated examination and the renewed petition complies with the conditions for granting the application special status pursuant to the "Change to Practice for Petitions in Patent Applications to Make Special and for Accelerated Examination" published June 26, 2006, in the Federal Register. (71 Fed. Reg. 36323) as the original identified deficiencies for failing to comply with the requirements for the pre-examination search encompassing all of the features of the claims, and giving the claims the broadest reasonable interpretation, the statement of patentability must provide a detailed explanation of how each of the claims are patentable and the concise statement of the utility must be of the invention as defined in each of the independent claims (reference must be made to independent claims 1, 14 and 20) have been corrected.

The prosecution of the instant application will be conducted expeditiously according to the following guidelines.

1. The application will be docketed to an examiner and taken up for action within two weeks of the date of this decision.

2. Restriction Practice:
   If the examiner determines that the claims are not directed to a single invention, a telephone request to elect one single invention will be made pursuant to MPEP 812.01. As a prerequisite to the grant of this petition, the applicant has agreed to make an oral

election, by telephone, without traverse. If the applicant refuses to make an election without traverse, or the examiner cannot reach the applicant after a reasonable effort, the examiner will treat the first claimed invention (invention defined by claim 1) as having being constructively elected without traverse for examination.

3. Office action:
If it is determined that, after appropriate consultation, there is a potential rejection or any other issue to be addressed, the examiner will telephone the applicant and arrange an interview to discuss and resolve the issue. An Office action, other than a Notice of Allowance and Fee(s) Due (Notice of Allowance), will not be issued unless either: 1) an interview was conducted but did not result in agreed to action that places the application in condition for allowance, or, 2) a determination is made that an interview would be unlikely to result in the application being placed in condition for allowance, and 3) an internal conference has been held to review any rejection of any claim.

4. Time for Reply:
An Office action other than a Notice of Allowance or a final Office action will set a shortened statutory period of one month or thirty days, whichever is longer, for reply with no extension of time available under 37 CFR 1.136(a). Failure to timely file a reply within this non-extendible period for reply will result in the abandonment of the application.

5. Reply by Applicant:
A timely reply to an Office action other than the Notice of Allowance must be submitted electronically via EFS or EFS-web and limited to addressing the rejections, objections and requirement made. Any amendment that attempts to: 1) add claims which would result in more than three pending independent claims or more than twenty pending total claims; 2) present claims not encompassed by the pre-examination search or an updated accelerated examination support document; or 3) present claims that are directed a non-elected invention or an invention other than that previously claimed and examined in the application, will be treated as not fully responsive and will not be entered.

   For any amendment to the claims (including any new claim) that is not encompassed by the accelerated examination support document, applicant must provide an updated accelerated examination support document that encompasses the amended or new claims at the time of filing of the amendment.

   To proceed expeditiously with the examination, it is recommended that a reply with amendments made to any claim or with any new claim being added be accompanied by an updated accelerated examination support document or a statement explaining how the amended or new claim is supported by the original accelerated examination support document.

6. Information Disclosure Statement (IDS):

Any IDS filed during prosecution must be submitted electronically via EFS or EFS-web, accompanied by an updated accelerated examination support document, and be in compliance with 37 CFR 1.97 and 1.98.

7. Post-Allowance Processing:
   To expedite processing of the allowed application into a patent, the applicant must: 1) pay the required fees within one month of the date of the Notice of Allowance, and 2) not file any post allowance papers not required by the Office. In no event may the issue fee be paid and accepted later than three months from the date of the Notice of Allowance.

8. After-Final and Appeal Procedures:
   To expedite prosecution, after receiving the final Office action, applicant must: 1) promptly file a notice of appeal, an appeal brief and appeal fees; and 2) not request a pre-appeal brief conference.

   Any amendment, affidavit or other evidence filed after final Office action must comply with applicable rules and the requirements outlined in numbered paragraphs 5 and 6 above.

   On appeal, the application will proceed according to normal appeal procedures. After appeal, the application will again be treated special.

9. Proceedings Outside the Normal Examination Process:
   If the application becomes involved in a proceeding that is outside the normal examination process (e.g., a secrecy order, national security review, interference proceeding, petitions under 37 CFR 1.181, 182 or 183), the application will be treated special before and after such proceeding.

10. Final Disposition:
    The twelve month goal of this accelerated examination procedure ends with a final disposition. The mailing of a final Office action, a Notice of Allowance, the filing of a Notice of Appeal, or the filing of a Request for Continued Examination (RCE) is the final disposition.

If, during prosecution, a paper is not filed electronically using EFS-web, a reply is filed but is not fully responsive, the application is involved in an appeal, or a proceeding outside normal examination process, the application will still be examined expeditiously, however, the final disposition may occur more than twelve months from the filing of the application.

Any inquiry regarding this decision should be directed to Tod Swann, Quality Assurance Specialist, at (571) 272-3612.

WQAS 2430
Technology Center 2400

UNITED STATES PATENT AND TRADEMARK OFFICE

UNITED STATES DEPARTMENT OF COMMERCE
United States Patent and Trademark Office
Address: COMMISSIONER FOR PATENTS
P.O. Box 1450
Alexandria, Virginia 22313-1450
www.uspto.gov

APPLICATION NO.	FILING DATE	FIRST NAMED INVENTOR	ATTORNEY DOCKET NO.	CONFIRMATION NO.
12/196,165	08/21/2008	Wei-Lung Wang	JP920070208US1	9824

7590 05/06/2009

Duke W. Yee
Yee & Associates, P.C.
P.O. Box 802333
Dallas, TX 75380

EXAMINER
CERVETTI, DAVID GARCIA

ART UNIT	PAPER NUMBER
2436	

MAIL DATE	DELIVERY MODE
05/06/2009	PAPER

Please find below and/or attached an Office communication concerning this application or proceeding.

The time period for reply, if any, is set in the attached communication.

UNITED STATES PATENT AND TRADEMARK OFFICE

Commissioner for Patents
United States Patent and Trademark Office
P.O. Box 1450
Alexandria, VA 22313-1450
www.uspto.gov

WILMERHALE/NITROMED
1875 PENNSYLVANIA AVE, NW
WASHINGTON DC 20006

COPY MAILED
DEC 23 2008

In re Application of	:	
Bandarage et al.	:	
Application No. 12/196184	:	
Filing or 371(c) Date: 08/21/2008	:	
Attorney Docket Number:	:	DECISION
0102258.00345US6	:	ON PETITION

This is a decision in response to the "Petition Under 37 CFR § 1.57(a)," filed October 23, 2008, requesting that the above-identified application be accorded a filing date based upon a priority or benefit claim under 37 CFR 1.78.

The petition is granted to the extent indicated below.

Background

The application was filed on August 21, 2008. On September 8, 2008, the Office of Patent Application Processing mailed a Notice of Incomplete Provisional Application (hereinafter "Notice"), informing Applicant, *inter alia*, that the application had NOT been accorded a filing date because the application had been deposited without drawings.

Applicant responds with the present petition and request inclusion of the inadvertently omitted drawings, based upon a priority claim to a prior-filed application in accordance with 37 CFR 1.57(a).

Petitioner's arguments and evidence have been considered. However, a review of the application confirms that, as filed, the application contained composition and method claims. The MPEP 601.01(f) provides that:

> It has been USPTO practice to treat an application that contains at least one process or method claim as an application for which a drawing is not necessary for an understanding of the invention under 35 U.S.C. 113 (first sentence). The same practice has been followed in composition claims.

Thus, pursuant to § 601.01(f), a drawing is not considered essential for a filing date. The present application is entitled to a filing date without drawings present in the application.

Accordingly, the Office should have granted the application a filing date and mailed a Notice of Omitted Items instead of a Notice of Incomplete Nonprovisional Application. As stated in MPEP 601.01(g) under the section entitled, "Application Entitled to a Filing Date," applicant may submit an amendment to include the inadvertently omitted portion of the drawing(s) pursuant to 37 CFR 1.57(a):

> [i]f an application was filed on or after September 21, 2004, and contains a claim under 37 CFR 1.55 for priority of a prior-filed foreign application, or a claim under 37 CFR 1.78 for the benefit of a prior-filed provisional, nonprovisional, or international application that was present on the filing date of the application, and the omitted portion of the drawing(s) was inadvertently omitted from the application and is completely contained in the prior-filed application[.]

Please note that no petition is required and that the amendment must comply with 37 CFR 1.57(a) and 37 CFR 1.121. See MPEP § 201.17. Entry of an amendment filed with the present petition on October 23, 2008, will be determined by the examiner.

To the extent the present petition requests a filing date of August 21, 2008 with no drawings present in the application, the petition is **GRANTED**.

Given the basis for granting this petition, no petition fee is due. The petition fee has been refunded to Applicant's deposit account as authorized in the present petition.

Pursuant to this decision, the application will be referred to OPAP for:

X **correction of the filing date to August 21, 2008**;
X **for indication in Office records, as appropriate, that "0" sheets of drawings were present on filing** and
X **for issuance of a filing receipt.**

Telephone inquiries concerning this matter should be directed to Attorney Derek Woods at (571) 272-3232.

Anthony Knight
Supervisor
Office of Petitions