UNITED STATES PATENT AND TRADEMARK OFFICE

Commissioner for Patents
United States Patent and Trademark Office
P.O. Box 1450
Alexandria, VA 22313-1450
www.uspto.gov

MAILED

JUL 17 2009

OFFICE OF PETITIONS

CANON USA INC INTELLECTUAL PROPERTY DIVISION
15975 ALTON PARKWAY
IRVINE CA 92618-3731

In re Application of	:	
Sano, et al.	:	
Application No. 12/369,995	:	DECISION ACCORDING STATUS
Filed: February 12, 2009	:	UNDER 37 CFR 1.47(a)
Attorney Docket No. 10049884US01	:	

This is in response to the petition under 37 CFR 1.47(a), filed June 26, 2009.

The petition under 37 CFR 1.47(a) is **GRANTED**.

With the instant petition, Rule 47 applicant has established that the application papers were mailed to the last known address of non-signing inventor Takebayashi on April 14, 2009, but as of the date of the petition, no executed declaration from Takebayashi has been received.

The above-identified application and papers have been reviewed and found to be in compliance with 37 CFR 1.47(a). Accordingly, the above-identified application is hereby accorded Rule 1.47(a) status. As provided in 37 CFR 1.47(c), this Office will forward notice of this application's filing to the non-signing inventors at the last known address provided in the petition. Notice of the filing of this application will also be published in the Official Gazette.

The matter is being forwarded to the Office of Patent Application Processing for pre-examination processing.

Telephone inquiries related to this decision may be directed to the undersigned at (571)272-3207.

Cliff Congo
Petitions Attorney
Office of Petitions

UNITED STATES PATENT AND TRADEMARK OFFICE

Commissioner for Patents
United States Patent and Trademark Office
P.O. Box 1450
Alexandria, VA 22313-1450
www.uspto.gov

MANABU TAKEBAYASHI
265-13 IKEHATA ISEHARA-SHI
KANAGAWA 259-1144 JAPAN

MAILED

JUL 17 2009

OFFICE OF PETITIONS

In re Application of Sano, et al. Application No. 12/369,995 Filed: February 12, 2009 Title: Image Processing Device, Image Processing Method, Program, and Storage Medium	: : : : : :	LETTER

Dear Mr. Takebayashi:

You are named as a joint inventor in the above-identified United States patent application filed under the provisions of 35 USC 116 (United States Code) and 37 CFR 1.47(a), Rules of Practice in Patent Cases. Should a patent be granted on the application you will be designated therein as a joint inventor.

As a joint inventor, you are entitled to inspect any paper in the file wrapper of the application, order copies of all or any part thereof (at a prepaid cost per 37 CFR 1.19) or make your position of record in the application. Alternatively, you may arrange to do any of the preceding through a registered patent attorney or agent presenting written authorization from you. If you care to join the application, agent of record would presumably assist you. Joining in the application would entail the filing of an appropriate oath or declaration by you pursuant to 37 CFR 1.63.

Telephone inquiries regarding this communication should be directed to Petitions Attorney Cliff Congo at (571)272-3207. Requests for information regarding your application should be directed to the File Information Unit at (703) 308-2733. Information regarding how to pay for and order a copy of the application, or a specific paper in the application, should be directed to the Certification Division at (703) 308-9726 or 1-800-972-6382 (outside the Washington D.C. area).

Cliff Congo
Petitions Attorney
Office of Petitions

UNITED STATES PATENT AND TRADEMARK OFFICE

Commissioner for Patents
United States Patent and Trademark Office
P.O. Box 1450
Alexandria, VA 22313-1450
www.uspto.gov

NELSON MULLINS RILEY & SCARBOROUGH, LLP
1320 MAIN STREET, 17TH FLOOR
COLUMBIA, SC 29201

COPY MAILED

DEC 0 2 2009

OFFICE OF PETITIONS

In re Application of	:	
Garries et al.	:	DECISION ON PETITION
Application No. 12/370,088	:	TO WITHDRAW
Filed: February 12, 2009	:	FROM RECORD
Attorney Docket No. 41832/5820	:	

This is a decision on the Request to Withdraw as attorney or agent of record under 37 C.F.R. § 1.36(b), filed September 9, 2009.

The request is **DISMISSED** as involving a moot issue.

A review of the file record indicates that the previous power of attorney was revoked by the assignee on September 13, 2009. Accordingly, the request to withdraw under 37 C.F.R. § 1.36(b) is moot.

All future communications from the Office will be directed to the below-listed address until otherwise properly notified.

Telephone inquires concerning this decision should be directed to the undersigned at 571-272-3206. All other inquires concerning either the examination or status of the application should be directed to the Technology Center.

Liana Walsh
Petitions Examiner
Office of Petitions

cc: JELD-WEN, INC. - STOEL RIVES LLP
900 SW FIFTH AVENUE
SUITE 2600
PORTLAND OR 97204-1268

UNITED STATES PATENT AND TRADEMARK OFFICE

Commissioner for Patents
United States Patent and Trademark Office
P.O. Box 1450
Alexandria, VA 22313-1450
www.uspto.gov

PHILIP S. JOHNSON
JOHNSON & JOHNSON
ONE JOHNSON & JOHNSON PLAZA
NEW BRUNSWICK NJ 08933-7003

COPY MAILED
JUN 2 2 2009
OFFICE OF PETITIONS

In re Application of	:	
Bunick, et al.	:	
Application No. 12/370,117	:	DECISION
Filed/Deposited: 12 February, 2009	:	
Attorney Docket No. MCP0328USCNT1	:	

This is a decision on the petition filed 16 March, 2009, seeking to have accorded a filing date of 12 February, 2009, for the above-identified application based upon a showing that the omitted drawing/figures were present in the prior-filed co-pending provisional and international applications to which this application claimed benefit (under 37 C.F.R. §1.78 and §1.55) on deposit.

The petition is **DISMISSED**.

The instant application was deposited on 12 February, 2009.

On 2 March, 2009, the Office of Patent Application Processing (OPAP) mailed a Notice of Incomplete Nonprovisional Application, stating that the application had not been accorded a filing date because it had been deposited without drawing as required under 35 U.S.C. §113 (first sentence). The Office indicated that Petitioner could demonstrate on petition the presence of the drawings/figures by presentation of evidence of deposit (e.g., date-stamped receipt card, EFS Acknowledgement Receipt); or submit the drawings/figures and accept the date of submission as the filing date. The Office gave Petitioner two (2) months within which to reply.

On 16 March, 2009, Petitioner filed, *inter alia*, filed a petition pursuant to 37 C.F.R. §1.57 seeking a filing date of 12 February, 2009, for the application. Petitioner appears to have filed an amendment under the rule, and any determination as to that amendment will be made by the Examiner.

Petitioner's arguments and evidence have been considered. However, a review of the application confirms that, as filed, the application contained at least one method/process/composition claim. MPEP §601.01(f) provides that:

> It has been USPTO practice to treat an application that contains at least one process or method claim as an application for which a drawing is not necessary for an understanding of the invention under 35 U.S.C. §113 (first sentence). The same practice has been followed in composition applications.

Thus, pursuant to §601.01(f), a drawing is not considered essential for a filing date. The instant application is entitled to a filing date without drawings present in the application.

Accordingly, the Office should have granted the application a filing date and mailed a Notice of Omitted Items instead of a Notice of Incomplete Nonprovisional Application.

The express incorporation by reference entitled Petitioner to file an amendment under 37 C.F.R. §1.57(b) to add the subject matter of the non-provisional application into the disclosure of this application. Please note that no petition is required for that purpose and that the amendment must comply with 37 C.F.R. §1.57(b) and 37 C.F.R. §1.121 (*See*: MPEP §201.06(c)(IV).) Any amendment to include the inadvertently omitted drawing(s) will be considered by the Examiner.

The Petition fee is waived and is being refunded *via* deposit account. Should Petitioner later find that a petition fee was not refunded, Petitioner should request a refund from the Office of Finance and enclose therewith a copy of this decision.

Pursuant to this decision, the application will be referred to the Office of Patent Application Processing (OPAP) for:

- **correction of the filing date to 12 February, 2009**;
- **indication in Office records, as appropriate, that "0" sheets of drawings were present on filing** and
- **issuance of a filing receipt.**

Telephone inquiries concerning this matter should be directed to John J Gillon, Jr., attorney, at (571) 272-3214. Inquiries regarding initial patent application processing should be directed to OPAP at (703) 308-9210.

Anthony Knight
Supervisor
Office of Petitions

UNITED STATES PATENT AND TRADEMARK OFFICE

Commissioner for Patents
United States Patent and Trademark Office
P.O. Box 1450
Alexandria, VA 22313-1450
www.uspto.gov

MAGNA INTERNATIONAL, INC.
337 MAGNA DRIVE
AURORA ON L4G-7K1 CA CANADA

COPY MAILED

NOV 0 9 2009

OFFICE OF PETITIONS

In re Application of	:
Larry L. Deal et al.	:
Application No. 12/370,165	: DECISION REFUSING STATUS
Filed: February 12, 2009	: UNDER 37 CFR 1.47(a)
Attorney Docket No. 707575US	:

This is in response to the petition under 37 CFR 1.47(a), filed September 8, 2009.

The petition is **DISMISSED**.

Rule 47 applicant is given TWO MONTHS from the mailing date of this decision to respond, correcting the below-noted deficiencies. Any response should be entitled "Request for Reconsideration of Petition Under 37 CFR 1.47(a)" and may include an oath or declaration executed by the inventor. **Failure to respond will result in abandonment of the application.** Any extensions of time will be governed by 37 CFR 1.136(a).

The above-identified application was filed on February 12, 2009, with an unsigned declaration. Accordingly, on March 2, 2009, a "Notice To File Missing Parts of Application" was mailed. In response, the instant petition and four month extension of time request were filed with a declaration signed by all joint inventors except Sarwar Islam and Phillip Piatkowski, Jr.. The petition seeks status under 37 CFR 1.47(a) on the basis that by his actions, Mr. Islam refuses to sign the declaration and that Mr. Piatkowski is deceased and that no legal representative could be located.

A grantable petition under 37 CFR 1.47(a) requires:

(1) proof that the non-signing inventor, or legal representative thereof, cannot be reached or refuses to sign the oath or declaration after having been presented with the application papers (specification, claims and drawings);

(2) an acceptable oath or declaration in compliance with 35 U.S.C. §§ 115 and 116;

(3) the petition fee; and

(4) a statement of the last known address of the non-signing inventor.

The petition bears proof that the application papers were forwarded to joint inventor Islam and that to date, he has not returned an executed copy of the oath or declaration. However, with respect to joint inventor Piatkowski, the present petition lacks items (1), (2) and (4).

37 CFR 1.42 states, in part:

> In the case of the death of the inventor, the legal representative (executor, administrator, etc.) of the deceased inventor may make the necessary oath or declaration, and apply for and obtain the patent.

Petitioner are advised that 37 CFR 1.47 is not considered an alternative to 37 CFR 1.42 since the language "cannot be found or reached after diligent effort" has no reasonable application to a deceased inventor.[1] 37 CFR 1.42 states that when the inventor is dead, the legal representative may make the necessary oath or declaration. 37 CFR 1.47 will apply when a known legal representative cannot be found or refuses to sign the declaration. In such cases, the last known address of the legal representative must be established before the grant of a patent.[2] Presumably a legal representative has or will be named to the estate of the deceased inventor.

To establish 37 CFR 1.47 status, petitioner must submit a 37 CFR 1.47 petition on behalf of the legal representative or heirs of the deceased inventor.

In regards to item (1), the mere statement that a legal representative could not be located, without sufficient proof of the efforts used to identify a legal representative, is insufficient to show that a diligent effort was made to locate Mr. Piatowski's legal representative or heirs. Where inability to find or locate a named inventor(s), or legal representative thereof, is alleged, a statement of facts should be submitted that fully describes the exact facts which are relied on to establish that a *diligent effort* was made to locate the inventor. The statement(s) of facts must be signed, where at all possible, by a person having *firsthand knowledge* of the facts recited therein. Statements based on hearsay, will not normally be accepted. Petitioners should demonstrate that a thorough inspection of sources including, but not limited to, personnel or payroll records and probate filings. In this case, petitioners should use diligent efforts to determine the current or last known address of the nearest living relative of the deceased inventor. Copies of the results of the search must be referred to in any renewed petition.[3]

---

[1] *In re Application Papers Filed September 10, 1954*, 108 USPQ 340 (Comm'r Pat. 1955).

[2] See 37 CFR 1.42.

[3] See MPEP 409.03(d).

Additionally, Mr. Piatkowski's legal representative or heirs will have to be proffered the complete application papers (specification, including claims, drawings, if any, and the declaration) for signature.[4] In the event that the legal representative or heirs refuse to sign the declaration, petitioners may provide proof that a copy of the application was sent or given to the legal representative for review by providing, with a renewed petition, a copy of the cover letter transmitting the application papers to the legal representative or details given in an affidavit or declaration of facts by a person having first-hand knowledge of the details.

In the event that Piatkowski's legal representative or heirs refuse in writing to sign the declaration, petitioners should provide a copy of the written refusal with any renewed petition. If the refusal is made orally to a person, then that person must provide details of the refusal in an affidavit or declaration of facts.

In regards to item (2), the oath or declaration must identify the name, residence, mailing address, and citizenship of the legal representative or heirs of the deceased inventor, and state that the legal representative or heirs are signing on behalf of the deceased joint inventor. A new oath or declaration in compliance with 37 CFR 1.63 and 1.64, containing the information described in this paragraph, is required.

In reference to item (4), above, the petition must include the last known address of the legal representative or heirs of the deceased joint inventor.

Further correspondence with respect to this matter should be addressed as follows:

By Mail: Mail Stop PETITIONS
Commissioner for Patents
Post Office Box 1450
Alexandria, VA 22313-1450

By fax: (571) 273-8300
ATTN: Office of Petitions

Telephone inquiries concerning this matter may be directed to the undersigned Petitions Attorney at (571) 272-3212.

Patricia Faison-Ball

Patricia Faison-Ball
Senior Petitions Attorney
Office of Petitions

---

[4] See also MPEP 409.01(a),(b); 409.03(c).

UNITED STATES PATENT AND TRADEMARK OFFICE

Commissioner for Patents
United States Patent and Trademark Office
P.O. Box 1450
Alexandria, VA 22313-1450
www.uspto.gov

MAGNA INTERNATIONAL, INC.
337 MAGNA DRIVE
AURORA ON L4G-7K1 CA CANADA

MAILED

FEB 04 2010

OFFICE OF PETITIONS

In re Application of Larry L. Deal et al. Application No. 12/370,165 Filed: February 12, 2009 Attorney Docket No. 707575US	DECISION ACCORDING STATUS UNDER 37 CFR 1.47(a)

This is in response to the request for reconsideration filed January 14, 2010 under 37 CFR 1.47(a).[1]

The petition is **GRANTED**.

The above-identified application was filed on February 12, 2009, with an unsigned declaration. Accordingly, on March 2, 2009, a "Notice To File Missing Parts of Application" was mailed. In response, the instant petition and four month extension of time request were filed with a declaration signed by all joint inventors except Sarwar Islam and Phillip Piatkowski, Jr. The petition seeks status under 37 CFR 1.47(a) on the basis that by his actions, Mr. Islam refuses to sign the declaration and that Mr. Piatkowski is deceased and that no legal representative could be located. A petition filed September 8, 2009 was dismissed in a decision mailed November 9, 2009 because a proper oath or declaration identifying the Legal Representative or proof that a complete copy of the application had been sent to the Legal Representative had been provided.

37 CFR 1.42 states, in part:

> In the case of the death of the inventor, the legal representative (executor, administrator, etc.) of the deceased inventor may make the necessary oath or declaration, and apply for and obtain the patent.

---

[1]A grantable petition under 37 CFR 1.47(a) requires:
(1) proof that the non-signing inventor, or legal representative thereof, cannot be reached or refuses to sign the oath or declaration after having been presented with the application papers (specification, claims and drawings);
(2) an acceptable oath or declaration in compliance with 35 U.S.C. §§ 115 and 116;
(3) the petition fee; and
(4) a statement of the last known address of the non-signing inventor.

Petitioner are advised that 37 CFR 1.47 is not considered an alternative to 37 CFR 1.42 since the language "cannot be found or reached after diligent effort" has no reasonable application to a deceased inventor.[2] 37 CFR 1.42 states that when the inventor is dead, the legal representative may make the necessary oath or declaration. 37 CFR 1.47 will apply when a known legal representative cannot be found or refuses to sign the declaration. In such cases, the last known address of the legal representative must be established before the grant of a patent.[3] Presumably a legal representative has or will be named to the estate of the deceased inventor.

To establish 37 CFR 1.47 status, petitioner must submit a 37 CFR 1.47 petition on behalf of the legal representative or heirs of the deceased inventor.

The petition bears proof that the application papers were forwarded to joint inventor Islam and that to date, he has not returned an executed copy of the oath or declaration. The petition also bears proof that the application papers were forwarded to and received by Mrs. Leah M. Piatkowski, wife of deceased inventor Phillip Piatkowski, at her last known address and that she has not returned an executed copy of the oath or declaration. Petitioner argues therefore by their actions, Mr. Islam and Mrs. Piatkowski are refusing to cooperate with the filing of the instant application.

The above-identified application and papers have been reviewed and found in compliance with 37 CFR 1.47(a). In view thereof, this application is hereby accorded Rule 1.47(a) status. All requirements under 37 CFR 1.47(a) therefore having been met, as provided in Rule 1.47(c), this Office will forward notice of this application's filing to the Legal Representative at the address given in the petition. Notice of the filing of this application will also be published in the Official Gazette.

This matter is being referred to the Office of Patent Application Processing for further pre-examination processing.

Telephone inquiries concerning this matter may be directed to the undersigned Petitions Attorney at (571) 272-3212.

Patricia Faison-Ball

Patricia Faison-Ball
Senior Petitions Attorney
Office of Petitions

---

[2] *In re Application Papers Filed September 10, 1954*, 108 USPQ 340 (Comm'r Pat. 1955).

[3] See 37 CFR 1.42.

UNITED STATES PATENT AND TRADEMARK OFFICE

UNITED STATES DEPARTMENT OF COMMERCE
United States Patent and Trademark Office
Address: COMMISSIONER FOR PATENTS
P.O. Box 1450
Alexandria, Virginia 22313-1450
www.uspto.gov

APPLICATION NO.	FILING DATE	FIRST NAMED INVENTOR	ATTORNEY DOCKET NO.	CONFIRMATION NO.
12/370,298	02/12/2009	Ken Kikuchi	03500.168197	5448

5514 7590 05/07/2010
FITZPATRICK CELLA HARPER & SCINTO
1290 Avenue of the Americas
NEW YORK, NY 10104-3800

EXAMINER
TRAN, HOAN H

ART UNIT	PAPER NUMBER
2884	

MAIL DATE	DELIVERY MODE
05/07/2010	PAPER

Please find below and/or attached an Office communication concerning this application or proceeding.

The time period for reply, if any, is set in the attached communication.

UNITED STATES PATENT AND TRADEMARK OFFICE

Commissioner for Patents
United States Patent and Trademark Office
P.O. Box 1450
Alexandria, VA 22313-1450
www.uspto.gov

FITZPATRICK CELLA HARPER & SCINTO
1290 Avenue of the Americas
NEW YORK NY 10104-3800

In re Application of	
KIKUCHI et al	**: DECISION ON REQUEST TO**
Application No.: 12/370,298	**: PARTICIPATE IN THE PATENT**
Filed: 12 February 2009	**: PROSECUTION HIGHWAY**
Attorney Docket No.: 03500.168197	**: PROGRAM AND PETITION**
For: COLOR	**: TO MAKE SPECIAL UNDER**
ELECTROPHOTOGRAPHIC IMAGE	**: 37 CFR 1.102(d)**
FORMING APPARATUS	

This is a decision on the request to participate in the Patent Prosecution Highway (PPH) program and the petition under 37 CFR 1.102(d), filed 14 April 2010, to make the above-identified application special.

The request and petition are **DISMISSED**.

A grantable request to participate in the PPH program and petition to make special require:

1. The U.S. application must validly claim priority under 35 U.S.C. 119(a) to one or more applications filed in the JPO, note where the JPO application with similar claims is not the same application from which the U.S. application claims priority that the applicant must identify the relationship between the JPO application with similar claims and the JPO priority application;

2. Applicant must submit a copy of:
   a. The allowable/patentable claim(s) from the JPO application(s) or if a copy of the allowable/patentable claims is available via the Dossier Access System (DAS) applicant may request the USPTO obtain a copy from the DAS, however if the USPTO is unable to obtain a copy from the DAS the applicant will be required to submit a copy;
   b. An English translation of the allowable/patentable claim(s) and
   c. A statement that the English translation is accurate;

3. Applicant must
   a. Ensure all the claims in the U.S. application must sufficiently correspond or be amended to sufficiently correspond to the allowable/patentable claim(s) in the JPO application(s) and

b. Submit a claims correspondence table in English;

4. Examination of the U.S. application has not begun;

5. Applicant must submit:
   a. Documentation of prior office action:
      i. a copy of the office action(s) just prior to the "Decision to Grant a Patent" from each of the JPO application(s) containing the allowable/patentable claim(s) or
      ii. if the allowable/patentable claims(s) are from a "Notification of Reasons for Refusal" then the Notification of Reasons for Refusal or
      iii. if the JPO application is a first action allowance then no office action from the JPO is necessary should be indicated on the request/petition form;

      Further, if a copy of the documents from a or b above is available via the Dossier Access System (DAS) applicant may request the USPTO obtain a copy from the DAS, however if the USPTO is unable to obtain a copy from the DAS the applicant will be required to submit a copy;
   b. An English language translation of the JPO Office action from (5)(a)(i)-(ii) above
   c. A statement that the English translation is accurate;

6. Applicant must submit:
   a. An IDS listing the documents cited by the JPO examiner in the JPO office action (unless already submitted in this application)
   b. Copies of the documents except U.S. patents or U.S. patent application publications (unless already submitted in this application);

7. The required petition fee under 37 CFR 1.17(h).

Conditions (1) – (5) and (7) above are considered to have been met. However, the request to participate in the PPH pilot program and petition fails meet condition (6).

Regarding the requirement of condition (6), applicant has failed to provide a copy of JP application 9-44055 cited by the JPO examiner. Two copies of 2006-85064 were received.

Applicant is given **ONE** opportunity within a time period of **ONE MONTH or THIRTY DAYS**, whichever is longer, from the mailing date of this decision to correct the deficiencies. **NO EXTENSION OF TIME UNDER 37 CFR 1.136 IS PERMITTED.** If the deficiencies are not corrected with the time period given, the application will await action in its regular turn.

Response must be filed via the Electronic Filing System (EFS) with the Document Code PPH.PET.652. Any preliminary amendments and IDS submitted with the PPH documents must be separately indexed as a preliminary amendment and IDS, respectively.

Telephone inquiries concerning this decision should be directed to Lee W. Young at 571-272-4549.

All other inquiries concerning the examination or status of the application is accessible in the PAIR system at http://www.uspto.gov/ebc/index.html.

Lee W. Young
TQAS Technology Center 2800 - Semiconductors,
Electrical & Optical Systems & Components

UNITED STATES PATENT AND TRADEMARK OFFICE

UNITED STATES DEPARTMENT OF COMMERCE
United States Patent and Trademark Office
Address: COMMISSIONER FOR PATENTS
P.O. Box 1450
Alexandria, Virginia 22313-1450
www.uspto.gov

APPLICATION NO.	FILING DATE	FIRST NAMED INVENTOR	ATTORNEY DOCKET NO.	CONFIRMATION NO.
12/370,298	02/12/2009	Ken Kikuchi	03500.168197	5448

5514 7590 05/27/2010
FITZPATRICK CELLA HARPER & SCINTO
1290 Avenue of the Americas
NEW YORK, NY 10104-3800

EXAMINER
TRAN, HOAN H

ART UNIT	PAPER NUMBER
2884	

MAIL DATE	DELIVERY MODE
05/27/2010	PAPER

Please find below and/or attached an Office communication concerning this application or proceeding.

The time period for reply, if any, is set in the attached communication.

UNITED STATES PATENT AND TRADEMARK OFFICE

Commissioner for Patents
United States Patent and Trademark Office
P.O. Box 1450
Alexandria, VA 22313-1450
www.uspto.gov

FITZPATRICK CELLA HARPER & SCINTO
1290 Avenue of the Americas
NEW YORK NY 10104-3800

In re Application of	
KIKUCHI et al	**: DECISION ON REQUEST TO**
Application No.: 12/370,298	**: PARTICIPATE IN THE PATENT**
Filed: 12 February 2009	**: PROSECUTION HIGHWAY**
Attorney Docket No.: 03500.168197	**: PROGRAM AND PETITION**
For: COLOR	**: TO MAKE SPECIAL UNDER**
ELECTROPHOTOGRAPHIC IMAGE	**: 37 CFR 1.102(d)**
FORMING APPARATUS	

This is a decision on the request to participate in the Patent Prosecution Highway (PPH) program and the petition under 37 CFR 1.102(d), filed 14 April 2010 and renewed on 14 May 2010, to make the above-identified application special.

The request and petition are **GRANTED**.

A grantable request to participate in the PPH program and petition to make special require:

1. The U.S. application must validly claim priority under 35 U.S.C. 119(a) to one or more applications filed in the JPO, note where the JPO application with similar claims is not the same application from which the U.S. application claims priority that the applicant must identify the relationship between the JPO application with similar claims and the JPO priority application;

2. Applicant must submit a copy of:
   a. The allowable/patentable claim(s) from the JPO application(s) or if a copy of the allowable/patentable claims is available via the Dossier Access System (DAS) applicant may request the USPTO obtain a copy from the DAS, however if the USPTO is unable to obtain a copy from the DAS the applicant will be required to submit a copy;
   b. An English translation of the allowable/patentable claim(s) and
   c. A statement that the English translation is accurate;

3. Applicant must
   a. Ensure all the claims in the U.S. application must sufficiently correspond or be amended to sufficiently correspond to the allowable/patentable claim(s) in the JPO application(s) and
   b. Submit a claims correspondence table in English;

4. Examination of the U.S. application has not begun;

5. Applicant must submit:
    a. Documentation of prior office action:
        i. a copy of the office action(s) just prior to the "Decision to Grant a Patent" from each of the JPO application(s) containing the allowable/patentable claim(s) or
        ii. if the allowable/patentable claims(s) are from a "Notification of Reasons for Refusal" then the Notification of Reasons for Refusal or
        iii. if the JPO application is a first action allowance then no office action from the JPO is necessary should be indicated on the request/petition form;

    Further, if a copy of the documents from a or b above is available via the Dossier Access System (DAS) applicant may request the USPTO obtain a copy from the DAS, however if the USPTO is unable to obtain a copy from the DAS the applicant will be required to submit a copy;
    b. An English language translation of the JPO Office action from (5)(a)(i)-(ii) above
    c. A statement that the English translation is accurate;

6. Applicant must submit:
    a. An IDS listing the documents cited by the JPO examiner in the JPO office action (unless already submitted in this application)
    b. Copies of the documents except U.S. patents or U.S. patent application publications (unless already submitted in this application);

7. The required petition fee under 37 CFR 1.17(h).

The request to participate in the PPH pilot program and petition comply with the above requirements. Accordingly, the above-identified application has been accorded "special" status.

Telephone inquiries concerning this decision should be directed to Lee W. Young at 571-272-4549.

All other inquiries concerning the examination or status of the application is accessible in the PAIR system at http://www.uspto.gov/ebc.index.html.

This application will be forwarded to the examiner for action on the merits commensurate with this decision once this application's formality reviews have been completed.

Lee W. Young
TQAS
Technology Center 2800 – Semiconductors
Electrical & Optical Systems & Components

UNITED STATES PATENT AND TRADEMARK OFFICE

Commissioner for Patents
United States Patent and Trademark Office
P.O. Box 1450
Alexandria, VA 22313-1450
www.uspto.gov

DARBY & DARBY P.C.
P.O. BOX 770
CHURCH STREET STATION
NEW YORK NY 10008-0770

COPY MAILED

MAY 26 2009

OFFICE OF PETITIONS

In re Application of
Patton, et al.
Application No. 12/370,343
Filed: 12 February, 2009
Attorney Docket No. 20982/1209175-US1

DECISION ON PETITION

This is in response to the petition filed on 27 April, 2009, and properly considered under 37 C.F.R. §1.47(a).

The petition as considered under 37 C.F.R. §1.47(a) is **DISMISSED**.

Rule 47 applicant is given TWO (2) MONTHS from the mailing date of this decision to reply, correcting the below-noted deficiencies. Any reply should be entitled "Request for Reconsideration of Petition Under 37 C.F.R. §1.47(a)," and should only address the deficiencies noted below, except that the reply may include an oath or declaration executed by the non-signing inventor. **FAILURE TO RESPOND WILL RESULT IN ABANDONMENT OF THE APPLICATION.** Any extensions of time will be governed by 37 C.F.R. §1.136(a).

This is **not** a final agency action within the meaning of 5 U.S.C. §704.

A grantable petition under 37 C.F.R. §1.47(a) requires: (1) petition and fee; (2) proof that the non-signing inventor cannot be reached or refuses to sign the oath or declaration after having been presented with the application papers (specification: description, claims and drawings); (3) an acceptable oath or declaration in compliance with 35 U.S.C. §§ 115 and 116; and (4) a statement of the last known address of the non-signing inventor(s)—with a showing of diligence in the effort to ascertain the validity of the address set forth as the reasonably believed to be last known/current/valid address.

Petitioners always are reminded that for transmission by Email of any document to be accepted by the Office, written acknowledgment of receipt and readability will be required.

Petitioner does not seem to have worked through the requirements of the petition, as set forth above, in satisfaction of those requirements. (*See* MPEP §409.03, and §409.03(a), et seq. Petitioners always are reminded that, as to proof that the non-signing inventor cannot be reached or refuses to sign the oath or declaration after having been presented with the application papers (specification: description, claims and drawings): the applicable statute (35 U.S.C.§ 116) requires that a "diligent effort" have been expended in attempting to find or reach the non-signing inventor. *See* MPEP §409.03, and §409.03(a) and (e): "a *bona fide* attempt.")

Petitioner has failed to provide the requirements under the regulation, including: proof that the non-signing inventor cannot be reached or refuses to sign the oath or declaration after having been presented with the entire application (specification: description, claims and drawings), supported by a statement of the last known address of the non-signing inventor(s)—with a showing of diligence in the effort to ascertain the validity of the address set forth as the reasonably believed to be last known/current/valid address.

These matters must be clarified on any renewed petition.

BACKGROUND

The record indicates:

The instant application was filed on 12 February, 2009, without, *inter alia*, a fully executed oath/declaration.

On 27 February, 2009, the Office mailed a Notice of Missing Parts indicating, *inter alia*, that a fully executed oath/declaration (signed and dated) was required.

On 27 April, 2009, Petitioner Jamie L. Wiegand (Reg. No. 52,361) filed, *inter alia*, a two-page petition with supporting documentation that indicated that while the entire application may have been sent via Email there was no acknowledgement of receipt and readability and, as indicated by the cover letter and Petitioner's statement, the transmission via UPS conveyed only the oath/declaration, assignment and coverletter. The submission included an oath/declaration signed by co-inventors Lipschutz and Clyman on behalf of themselves and non-signing co-inventor John D. Patton. (Also, it is unclear that Petitioner provided the requirements under the regulation, including a proper showing/evidence of diligence in the effort to ascertain the validity of the address set forth as the reasonably believed to be last known/current/valid address.

Thus, Petitioner does not seemed to have worked through the requirements of the petition, as set forth above, in satisfaction of those requirements. (*See* MPEP §409.03, and §409.03(a), et seq. Petitioners always are reminded that, as to proof that the non-signing inventor cannot be reached or refuses to sign the oath or declaration after having been presented with the application papers (specification: description, claims and drawings): the applicable statute (35 U.S.C.§ 116) requires

that a "diligent effort" have been expended in attempting to find or reach the non-signing inventor. *See* MPEP §409.03, and §409.03(a) and (e): "a *bona fide* attempt.")

Again, Petitioners always are reminded that for transmission by Email of any document to be accepted by the Office, written acknowledgment of receipt and readability will be required.

As set forth above, any renewed petition **must** clarify these items.

The availability of applications and application papers online to applicants/practitioners who diligently associate their Customer Number with the respective application(s) now provides an applicant/practitioner on-demand information as to events/transactions in an application. Thus, now if one wishes to know the progress in and/or status of an application or the accuracy of the data therein, one need only look at the file online.

Out of an abundance of caution, Petitioners always are reminded that those registered to practice *and* all others who make representations before the Office must inquire into the underlying facts of representations made to the Office and support averments with the appropriate documentation–since all owe to the Office the continuing duty to disclose.[1]

The instant petition under 37 C.F.R. §1.47(a) is **dismissed**.

Further correspondence with respect to this matter should be addressed as follows:

By mail: Mail Stop PETITIONS
Commissioner for Patents
Post Office Box 1450
Alexandria, VA 22313-1450

By hand: Customer Service Window
Mail Stop Petitions
Randolph Building
401 Dulany Street
Alexandria, VA 22314

By FAX: (571) 273-8300
ATTN: Office of Petitions

[1] See supplement of 17 June, 1999. The Patent and Trademark Office is relying on petitioner's duty of candor and good faith and accepting a statement made by Petitioner. See Changes to Patent Practice and Procedure, 62 Fed. Reg. at 53160 and 53178, 1203 Off. Gaz. Pat. Office at 88 and 103 (responses to comments 64 and 109)(applicant obligated under 37 C.F.R. §10.18 to inquire into the underlying facts and circumstances when providing statements to the Patent and Trademark Office). See specifically, the regulations at 37 C.F.R. §10.18.

While telephone inquiries regarding this decision may be directed to the undersigned at (571) 272-3214, it is noted that all practice before the Office is in writing (see: 37 C.F.R. §1.2[2]) and the proper authority for action on any matter in this regard are the statutes (35 U.S.C.), regulations (37 C.F.R.) and the commentary on policy (MPEP). Therefore, no telephone discussion may be controlling or considered authority for Petitioner's action(s).

/John J. Gillon, Jr./
John J. Gillon, Jr.
Senior Attorney
Office of Petitions

---

[2] The regulations at 37 C.F.R. §1.2 provide:

§1.2 Business to be transacted in writing.
All business with the Patent and Trademark Office should be transacted in writing. The personal attendance of applicants or their attorneys or agents at the Patent and Trademark Office is unnecessary. The action of the Patent and Trademark Office will be based exclusively on the written record in the Office. No attention will be paid to any alleged oral promise, stipulation, or understanding in relation to which there is disagreement or doubt.

UNITED STATES PATENT AND TRADEMARK OFFICE

Commissioner for Patents
United States Patent and Trademark Office
P.O. Box 1450
Alexandria, VA 22313-1450
www.uspto.gov

DARBY & DARBY P.C.
P.O. BOX 770
CHURCH STREET STATION
NEW YORK NY 10008-0770

COPY MAILED

SEP 11 2009

OFFICE OF PETITIONS

In re Application of
Patton, et al.
Application No. 12/370,343
Filed: 12 February, 2009
Attorney Docket No. 20982/1209175-US1

DECISION ON PETITION

This is in response to the petition filed on 24 July, 2009, and properly considered under 37 C.F.R. §1.47(a).

The petition as considered under 37 C.F.R. §1.47(a) is **GRANTED**.

A grantable petition under 37 C.F.R. §1.47(a) requires: (1) petition and fee; (2) proof that the non-signing inventor cannot be reached or refuses to sign the oath or declaration after having been presented with the application papers (specification: description, claims and drawings); (3) an acceptable oath or declaration in compliance with 35 U.S.C. §§ 115 and 116; and (4) a statement of the last known address of the non-signing inventor(s)—with a showing of diligence in the effort to ascertain the validity of the address set forth as the reasonably believed to be last known/current/valid address.

Petitioners always are reminded that for transmission by Email of any document to be accepted by the Office, written acknowledgment of receipt and readability will be required.

BACKGROUND

The record indicates:

The instant application was filed on 12 February, 2009, without, *inter alia*, a fully executed oath/declaration.

On 27 February, 2009, the Office mailed a Notice of Missing Parts indicating, *inter alia*, that a fully executed oath/declaration (signed and dated) was required.

On 27 April, 2009, Petitioner Jamie L. Wiegand (Reg. No. 52,361) filed, *inter alia*, a two-page petition with supporting documentation that indicated that while the entire application may have been sent via Email there was no acknowledgement of receipt and readability and, as indicated by the cover letter and Petitioner's statement, the transmission via UPS conveyed only the oath/declaration, assignment and cover letter. The submission included an oath/declaration signed by co-inventors Lipschutz and Clyman on behalf of themselves and non-signing co-inventor John D. Patton. It was not clear that Petitioner satisfied the requirements under the regulation, including a proper showing/evidence of diligence in the effort to ascertain the validity of the address set forth as the reasonably believed to be last known/current/valid address. The petition was dismissed on 26 May, 2009.

On 24 July, 2009, Petitioner submitted, *inter alia*, a request for reconsideration, and in support provided evidence of a search for a reasonably believed to be current/valid/last known address for the non-signing inventor, that address, and a copy of the transmittal letter of 22 June, 2009, by which the entire application (description, claims, abstract, drawings) were sent to the non-signing inventor, as well as a showing that he since has failed, and so constructively refused, to sign/join in the oath/declaration and the application.

The availability of applications and application papers online to applicants/practitioners who diligently associate their Customer Number with the respective application(s) now provides an applicant/practitioner on-demand information as to events/transactions in an application. Thus, now if one wishes to know the progress in and/or status of an application or the accuracy of the data therein, one need only look at the file online.

Out of an abundance of caution, Petitioners always are reminded that those registered to practice *and* all others who make representations before the Office must inquire into the underlying facts of representations made to the Office and support averments with the appropriate documentation–since all owe to the Office the continuing duty to disclose.[1]

CONCLUSION

The instant petition under 37 C.F.R. §1.47(a) is **granted** (status is accorded pursuant to 37 C.F.R. §1.47(a).)

As provided in 37 C.F.R. §1.47(c), this Office will forward notice of this application's filing to the non-signing inventors at the addresses given in the petition. Notice of the filing of this application will also be published in the Official Gazette.

---

[1] See supplement of 17 June, 1999. The Patent and Trademark Office is relying on petitioner's duty of candor and good faith and accepting a statement made by Petitioner. See Changes to Patent Practice and Procedure, 62 Fed. Reg. at 53160 and 53178, 1203 Off. Gaz. Pat. Office at 88 and 103 (responses to comments 64 and 109)(applicant obligated under 37 C.F.R. §10.18 to inquire into the underlying facts and circumstances when providing statements to the Patent and Trademark Office). See specifically, the regulations at 37 C.F.R. §10.18.

The instant application is released to the Office of Patent Application Processing (OPAP) for further processing in due course.

Telephone inquiries regarding this decision may be directed to the undersigned at (571) 272-3214—it is noted, however, that all practice before the Office is in writing (see: 37 C.F.R. §1.2[2]) and the proper authority for action on any matter in this regard are the statutes (35 U.S.C.), regulations (37 C.F.R.) and the commentary on policy (MPEP). Therefore, no telephone discussion may be controlling or considered authority for Petitioner's action(s).

/John J. Gillon, Jr./
John J. Gillon, Jr.
Senior Attorney
Office of Petitions

[2] The regulations at 37 C.F.R. §1.2 provide:
§1.2 Business to be transacted in writing.
All business with the Patent and Trademark Office should be transacted in writing. The personal attendance of applicants or their attorneys or agents at the Patent and Trademark Office is unnecessary. The action of the Patent and Trademark Office will be based exclusively on the written record in the Office. No attention will be paid to any alleged oral promise, stipulation, or understanding in relation to which there is disagreement or doubt.

UNITED STATES PATENT AND TRADEMARK OFFICE

Commissioner for Patents
United States Patent and Trademark Office
P.O. Box 1450
Alexandria, VA 22313-1450
www.uspto.gov

JOHN D. PATTON
8303 9TH AVE. NW
SEATTLE, WA 98117

COPY MAILED

SEP 1 1 2009

OFFICE OF PETITIONS

In re Application of
Patton, et al.
Application No. 12/370,343
Filed: 12 February, 2009
Attorney Docket No. 20982/1209175-US1

COMMUNICATION

Dear John D. Patton:

You are named as an inventor in the above-identified United States patent application, filed under the provisions of 35 U.S.C. §116 (United States Code), and 37 C.F.R. §1.47 (Code of Federal Regulations), Rules of Practice in Patent Cases. Should a patent be granted on the application you will be designated therein as an inventor.

As a named inventor you are entitled to inspect any paper in the file wrapper of the application, order copies of all or any part thereof (at a prepaid cost per 37 C.F.R. §1.19) or make your position of record in the application. Alternatively, you may arrange to do any of the preceding through a registered patent attorney or agent presenting written authorization from you. If you care to join the application, counsel of record (see below) would presumably assist you. Joining the application would entail the filing of an appropriate oath or declaration by you pursuant to 37 C.F.R. §1.63.

Should you elect to join in the application, the contact information for Counsel of Record is set forth at the end of this Communication.

Should you seek to identify independent Counsel, you may find the Patent Attorneys/Agents Search engine of assistance (https://oedci.uspto.gov/OEDCI/).

Requests for information regarding your application should be directed to the File Information Unit at (703) 308-2733. Information regarding how to pay for and order a copy of the application, or a specific paper in the application, should be directed to the Certification Division at (571) 272-3150 or 1 (800) 972-6382 (outside the Washington, DC area).

Telephone inquiries regarding this communication may be directed to the undersigned at (571) 272-3214—it is noted, however, that all practice before the Office is in writing (see: 37 C.F.R. §1.2[1]) and the proper authority for action on any matter in this regard are the statutes (35 U.S.C.), regulations (37 C.F.R.) and the commentary on policy (MPEP). Therefore, no telephone discussion may be controlling or considered authority for Petitioner's action(s) Moreover, the Office can neither advise you nor recommend Counsel in this matter.

/John J. Gillon, Jr./
John J. Gillon, Jr.
Senior Attorney
Office of Petitions

Counsel of Record
DARBY & DARBY P.C.
P.O. BOX 770
CHURCH STREET STATION
NEW YORK NY 10008-0770

[1] The regulations at 37 C.F.R. §1.2 provide:
§1.2 Business to be transacted in writing.
All business with the Patent and Trademark Office should be transacted in writing. The personal attendance of applicants or their attorneys or agents at the Patent and Trademark Office is unnecessary. The action of the Patent and Trademark Office will be based exclusively on the written record in the Office. No attention will be paid to any alleged oral promise, stipulation, or understanding in relation to which there is disagreement or doubt

UNITED STATES PATENT AND TRADEMARK OFFICE

Commissioner for Patents
United States Patent and Trademark Office
P.O. Box 1450
Alexandria, VA 22313-1450
www.uspto.gov

KELLY LOWRY & KELLEY, LLP
6320 CANOGA AVENUE
SUITE 1650
WOODLAND HILLS CA 91367

MAILED

JUN 15 2010

OFFICE OF PETITIONS

In re Application of

JOHN A. HOFFMAN
Application No. 12/370,433
Filed: February 12, 2009
Attorney Docket No. **FIRET-51681**

DECISION ON PETITION
TO MAKE SPECIAL UNDER
37 CFR 1.102(c)(1)

This is a decision on the petition under 37 CFR 1.102(c)(1), filed April 22, 2010, to make the above-identified application special based on applicant's age as set forth in MPEP § 708.02, Section IV.

The petition is **GRANTED**.

A grantable petition to make an application special under 37 CFR 1.102(c)(1) and MPEP § 708.02, Section IV: Applicant's Age must be accompanied by evidence showing that at least one of the applicants is 65 years of age, or more, such as a birth certificate or a statement by applicant. No fee is required

The instant petition includes a statement by a registered attorney. Accordingly, the above-identified application has been accorded "special" status.

Telephone inquiries concerning this decision should be directed to JoAnne Burke at 571-272-4584.

All other inquiries concerning either the examination or status of the application should be directed to the Technology Center.

The application is being forwarded to the Technology Center Art Unit 3752 for action on the merits commensurate with this decision.

/JoAnne Burke/
JoAnne Burke
Petitions Examiner
Office of Petitions

UNITED STATES PATENT AND TRADEMARK OFFICE

Commissioner for Patents
United States Patent and Trademark Office
P.O. Box 1450
Alexandria, VA 22313-1450
www.uspto.gov

WILSON SONSINI GOODRICH & ROSATI
650 PAGE MILL ROAD
PALO ALTO CA 94304-1050

COPY MAILED

APR 2 2 2009

OFFICE OF PETITIONS

In re Application of

Nurith KURN et al.
Application No. 12/370,514
Filed: Februrary 12, 2009
Attorney Docket No. **25115-726.201**

DECISION ON PETITION
TO MAKE SPECIAL UNDER
37 CFR 1.102(c)(1)

This is a decision on the petition under 37 CFR 1.102(c)(1), filed March 30, 2009, to make the above-identified application special based on applicant's age as set forth in M.P.E.P. § 708.02, Section IV.

The petition is **GRANTED**.

A grantable petition to make an application special under 37 CFR 1.102(c)(1) and MPEP § 708.02, Section IV: Applicant's Age must be accompanied by evidence showing that at least one of the applicants is 65 years of age, or more, such as a birth certificate or a statement by applicant. No fee is required

The instant petition includes a statement by Nurith Kurn, attesting to his age. Accordingly, the above-identified application will be accorded "special" status.

Telephone inquiries concerning this decision should be directed to Tredelle Jackson at 571-272-2783.

All other inquiries concerning either the examination or status of the application should be directed to the Office of Patent Application Processing.

This application is being referred to the Office of Patent Application Processing. This application will be accorded "special" status when pre-examination processing is done.

Tredelle D. Jackson
Paralegal Specialist
Office of Petitions

UNITED STATES PATENT AND TRADEMARK OFFICE

UNITED STATES DEPARTMENT OF COMMERCE
United States Patent and Trademark Office
Address: COMMISSIONER FOR PATENTS
P.O. Box 1450
Alexandria, Virginia 22313-1450
www.uspto.gov

APPLICATION NO.	FILING DATE	FIRST NAMED INVENTOR	ATTORNEY DOCKET NO.	CONFIRMATION NO.
12/370,521	02/12/2009	Matthew Weaver	67681-8002.US01	5870

22918 7590 06/28/2010
PERKINS COIE LLP
P.O. BOX 1208
SEATTLE, WA 98111-1208

EXAMINER
PAYNE, SHARON E

ART UNIT	PAPER NUMBER
2875	

NOTIFICATION DATE	DELIVERY MODE
06/28/2010	ELECTRONIC

Please find below and/or attached an Office communication concerning this application or proceeding.

The time period for reply, if any, is set in the attached communication.

Notice of the Office communication was sent electronically on above-indicated "Notification Date" to the following e-mail address(es):

patentprocurement@perkinscoie.com

UNITED STATES PATENT AND TRADEMARK OFFICE

Commissioner for Patents
United States Patent and Trademark Office
P.O. Box 1450
Alexandria, VA 22313-1450
www.uspto.gov

PERKINS COIE LLP
P.O. BOX 1208
SEATTLE WA 98111-1208

In re Application of	:	
Matthew Weaver	:	DECISION ON PETITION
Application No. 12/370,521	:	TO MAKE SPECIAL UNDER
Filed: 12 February 2009	:	THE GREEN TECHNOLOGY
Attorney Docket No. 67681-8002.US01	:	PILOT PROGRAM

This is a decision on the petition under 37 CFR 1.102, filed 17 June 2010, to make the above-identified application special under the pilot program for applications pertaining to Green Technologies as set forth 74 Federal Register Notice 64666 (December 8, 2009) and amended by 75 Federal Register Notice 28554 (May 21, 2010).

The petition is **GRANTED**.

A grantable petition to make an application special under 37 CFR 1.102 and the pilot program as set forth in 74 FR 64666 must be directed to a nonprovisional application filed under 35 USC 111(a) or be a national stage entry under 35 USC 371, exclusive of any reissue applications and be filed prior to the date of the notice, December 8, 2009.

In order to qualify for special status, the following requirements must be met. 1) The application must have no more than 3 independent claims and no more than 20 total claims. 2) The application must not contain any multiple dependent claims. 3) The petition must state the basis for seeking special status, i.e., the claimed invention either: A) materially enhances the quality of the environment or B) materially contributes to: i) the discovery or development of renewable energy resources, ii) the more efficient utilization and conservation of energy resources, or iii) greenhouse gas emission reduction. 4) If the disclosure is not clear on its face that the claimed invention materially contributes under category (A) or (B), the petition must be accompanied by a statement by the applicant, assignee, or an attorney/agent registered to practice before the Office explaining how the materiality standard is met. 5) A statement that applicant will agree to make an election without traverse in a telephonic interview if a restriction requirement is made by the examiner. 6) The petition to make special must be filed electronically. 7) The petition must be filed at least one day prior to the date that a first Office Action appears in the Patent Application Information Retrieval (PAIR) system. 8) The petition must be accompanied by a request for early publication in compliance with 37 CFR 1.219 and include the publication fee as set forth in 37 CFR 1.18(d).

The requirement for a fee for consideration of the petition to make special for applications pertaining to Green Technologies has been waived.

The instant petition complies with items 1 – 8 above. Accordingly, the above-identified application has been accorded "special" status.

Telephone inquires concerning this decision should be directed to Lee W. Young at 571-272-4549.

The application is being forwarded to the Technology Center Art Unit 2875 for action on the merits commensurate with this decision.

Lee W. Young
Quality Assurance Specialist
Technology Center 2800

UNITED STATES PATENT AND TRADEMARK OFFICE

Commissioner for Patents
United States Patent and Trademark Office
P.O. Box 1450
Alexandria, VA 22313-1450
www.uspto.gov

YAMAHA
C/O KEATING & BENNETT, LLP
1800 ALEXANDER BELL DRIVE
SUITE 200
RESTON VA 20191

COPY MAILED
JAN 28 2010

In re Application of	:	
Ito et al.	:	
Application No. 12/370,522	:	ON PETITION
Filed: February 12, 2009	:	
Attorney Docket No. 9060.461/ym	:	

This is a decision on the petition under 37 C.F.R. § 1.137(b), filed November 30, 2009, to revive the above-identified application.

The petition is **GRANTED**.

The petition satisfies the requirements of 37 CFR 1.137(b) in that petitioner has supplied (1) the reply in the form of Replacement Drawings, (2) the petition fee, and (3) a proper statement of unintentional delay.

Telephone inquiries concerning this decision should be directed to the undersigned at (571) 272-3206.

This matter is being referred to the Office of Patent Application Processing for further pre-examination processing. Thereafter, the application will be referred to Technology Center AU 3661 for examination on the merits.

Liana Walsh
Petitions Examiner
Office of Petitions

UNITED STATES PATENT AND TRADEMARK OFFICE

UNITED STATES DEPARTMENT OF COMMERCE
United States Patent and Trademark Office
Address: COMMISSIONER FOR PATENTS
P.O. Box 1450
Alexandria, Virginia 22313-1450
www.uspto.gov

APPLICATION NO.	FILING DATE	FIRST NAMED INVENTOR	ATTORNEY DOCKET NO.	CONFIRMATION NO.
12/370,528	02/12/2009	Erich J. Windhab	88265-58140	5880

28765 7590 03/24/2009
WINSTON & STRAWN LLP
PATENT DEPARTMENT
1700 K STREET, N.W.
WASHINGTON, DC 20006

EXAMINER

ART UNIT	PAPER NUMBER
1794	

MAIL DATE	DELIVERY MODE
03/24/2009	PAPER

Please find below and/or attached an Office communication concerning this application or proceeding.

The time period for reply, if any, is set in the attached communication.

UNITED STATES PATENT AND TRADEMARK OFFICE

Commissioner for Patents
United States Patent and Trademark Office
P.O. Box 1450
Alexandria, VA 22313-1450
www.uspto.gov

3/24/09

CST

In re application of
Erich Windhab et al
Serial No. 12/370,528
Filed: February 12, 2009
For: AERATED FROZEN SUSPENSION WITH ADJUSTED CREAMINESS AND SCOOPABILITY BASED ON STRESS-CONTROLLED GENERATION OF SUPERFINE MICROSTRUCTURES

DECISION ON PETITION TO MAKE SPECIAL

This is a decision on the petition filed on February 12, 2009 to make the above-identified application special under the accelerated examination program.

The petition to make the application special is **DISMISSED.**

REGULATION AND PRACTICE

A grantable petition to make special under 37 C.F.R. § 1.102(d) and pursuant to the "Change to Practice for Petitions in Patent Applications to Make Special and for Accelerated Examination" published in the Federal Register on June 26, 2006 (71 Fed. Reg. 36323), must satisfy the following conditions:

I. Conditions Regarding the Application:

1. the application must be a non-reissue utility or design application filed under 37 CFR 1.111(a);
2. the application, the petition and the required fees must be filed electronically using the USPTO's electronic filing system (EFS), or EFS-web; if not filed electronically, a statement asserting that EFS and EFS-web were not available during the normal business hours;
3. at the time of filing, the application must be complete under 37 CFR 1.51 and in condition for examination;
4. the application must contain three or fewer independent claims and twenty or fewer total claims and the claims must be directed to a single invention.

II. Conditions Regarding the Petition:

The petition must:

1. be filed with the application;

2. include a statement that applicant agrees not to separately argue the patentability of any dependent claim during any appeal in the application;

3. include a statement that applicant agrees to make an election without traverse in a telephone interview;

4. include a statement that applicant agrees to conduct such an interview when requested by the examiner;

5. include a statement, made based on a good faith belief, that a preexamination search in compliance with the following requirements, was conducted, including an identification of the field of search by United States class and subclass, where applicable, and for database searches, the search logic or chemical structure or sequence used as a query, the name of the file(s) searched and the database service, and the date of the search.

The preexamination search must:

5.1 involve U.S. patents and patent application publications, foreign patent documents, and non-patent literature, unless the applicant can justify with reasonable certainty that no references more pertinent than those already identified are likely to be found in the eliminated sources and includes such a justification with this statement;

5.2. be directed to the claimed invention and encompass all of the features of the claims, giving the claims the broadest reasonable interpretation;

5.3. encompass the disclosed features that may be claimed.

6. must provide in support of the petition an accelerated examination support document.

An accelerated examination support document must include:

6.1. an information disclosure statement (IDS) in compliance with 37 CFR 1.98 citing each reference deemed most closely related to the subject matter of each of the claims;

6.2. an identification of all the limitations in the claims that are disclosed by the reference specifying where the limitation is disclosed in the cited reference;

6.3. a detailed explanation of how each of the claims are patentable over the references cited with particularity required by 37 CFR 1.111(b) and (c);

6.4. a concise statement of the utility of the invention as defined in each of the independent claims (unless the application is a design application);

6.5. a showing of where each limitation of the claims finds support under 35 USC 112, first paragraph, in the written description of the specification. If applicable, the showing must also identify: (1) each means- (or step) plus-function claim element that invokes consideration under 35 USC 112, sixth paragraph; and (2) the structure, material, or acts in the specification that corresponds to each means- (or step) plus-function claim element that invokes consideration under 35 USC 112, sixth paragraph; if the application claims the benefit of one or more applications under title 35, United States Code, the showing must also include where each limitation of the claims finds support under 35 USC 112, first paragraph, in each such application in which such supports exists;

6.6. an identification of any cited references that may be disqualified under 35 USC 103(c).

REVIEW OF FACTS

The conditions regarding the application (section I, subsections 1-4) discussed above are considered to have been met. Additionally, the conditions regarding the petition, section II, subsections 1-4, are considered to have been met. However, the petition fails to comply with condition II, subsections 5 and 6.

First, it appears that the search is incomplete. Note that a search in Class 426, subclass 519 is also required.

The statement showing support for the present claims on pages 14 - 15 of the Accelerated Examination Support Document (AESD) is not sufficient. While petitioner has provided a showing of where each limitation finds support in the present application, it is also required that petitioner provide a showing of where each limitation of the claims finds support under 35 USC 112, first paragraph, in the written description of parent applications 11/589,123, 10/886,151 and 60/485,425 as applicant has claimed priority to each of these applications.

Applicant has provided 2 separate IDS's. The first is named "Group I" and is 2 pages. The second is named "Group II" and is 5 pages. While all of the references of the "Group I" IDS have been discussed in the AESD, only seven (7) of those references listed on the "Group II" IDS have been discussed.

Applicant is encouraged to review the Frequently Asked Questions concerning the Accelerated Examination Program posted on www.uspto.gov. Specifically, note the question and answer reproduced below:

IDS 3. Will the Office accept an accelerated examination support document (AESD) that contains a list of references in the information disclosure statement (IDS) of the AESD, but does not include any identification and explanation for those references that are not required to be submitted in the IDS of the AESD (*i.e.*, references that are not most closely related to the subject matter of each of the claims)?

No, the AESD will be deemed insufficient for lack of identification and explanation. The applicant will be notified of the defects and the application will remain in the status of a new application awaiting action in its regular turn. The applicant will be given a time period of one month, without any extension of time under 37 CFR §1.136(a), to perfect the petition.

If applicant wishes to cite references that are not required in an AESD for the examiner to consider, applicant may submit such references in a separate IDS in compliance with 37 CFR §1.97 and §1.98. Applicant should clearly identify the IDS of the AESD that is in support of the petition to make special and, similarly, applicant should clearly identify the separate IDS that is not in support of the petition. Consistent with 37 CFR §10.18, any reference submitted in a separate IDS that is not part of an AESD will be treated as a representation by applicant to the

USPTO that no reference submitted in the separate IDS is deemed closer to the subject matter of at least one claim than the references provided in the AESD.

Accordingly, those references which are in support of the petition to make special must be listed and labeled on one IDS, while those references which are not in support of the petition to make special, must be listed and labeled on a separate IDS.

Therefore, the petition fails to meet the required conditions to be accorded special status under the accelerated examination procedure.

DECISION

For the above-stated reasons, the petition is dismissed. The application will therefore be taken up by the examiner in its regular turn.

Petitioner is given a single opportunity to perfect the petition. Any request for reconsideration of this decision must be submitted within 1 (one) month or 30 (thirty) days, whichever is longer, (no extension of time under 37 CFR 1.136(a)) from the date of this decision in order to be considered timely. Any request for reconsideration must address the deficiencies indicated above.

Petitioner is reminded that, upon granting of the special status of the application on request for reconsideration, the application will be processed expeditiously. However, due to the dismissal of the instant petition, examination may not be completed within twelve months of the filing date of the application.

Any inquiry regarding this decision should be directed to Christine Tierney, Quality Assurance Specialist, at (571) 272-1055.

/ Christine Tierney /

Christine Tierney
Quality Assurance Specialist
Technology Center 1700

UNITED STATES PATENT AND TRADEMARK OFFICE

UNITED STATES DEPARTMENT OF COMMERCE
United States Patent and Trademark Office
Address: COMMISSIONER FOR PATENTS
P.O. Box 1450
Alexandria, Virginia 22313-1450
www.uspto.gov

APPLICATION NO.	FILING DATE	FIRST NAMED INVENTOR	ATTORNEY DOCKET NO.	CONFIRMATION NO.
12/370,528	02/12/2009	Erich J. Windhab	88265-58140	5880

28765 7590 04/24/2009
WINSTON & STRAWN LLP
PATENT DEPARTMENT
1700 K STREET, N.W.
WASHINGTON, DC 20006

EXAMINER

ART UNIT	PAPER NUMBER
1794	

NOTIFICATION DATE	DELIVERY MODE
04/24/2009	ELECTRONIC

Please find below and/or attached an Office communication concerning this application or proceeding.

The time period for reply, if any, is set in the attached communication.

Notice of the Office communication was sent electronically on above-indicated "Notification Date" to the following e-mail address(es):

patentdocket@winston.com
mwalker@winston.com

UNITED STATES PATENT AND TRADEMARK OFFICE

Commissioner for Patents
United States Patent and Trademark Office
P.O. Box 1450
Alexandria, VA 22313-1450
www.uspto.gov

CST

APR 24 2009

In re application of Erich Windhab et al Serial No. 12/370,528 Filed: February 12, 2009 For: AERATED FROZEN SUSPENSION WITH ADJUSTED CREAMINESS AND SCOOPABILITY BASED ON STRESS-CONTROLLED GENERATION OF SUPERFINE MICROSTRUCTURES	DECISION ON PETITION TO MAKE SPECIAL

This is a decision on the Request for Reconsideration of Petition to Make Special under the Accelerated Examination Program filed on April 14, 2009 to make the above-identified application special.

The petition to make the application special is **GRANTED.**

The application is eligible for accelerated examination and the petition complies with the conditions for granting the application special status pursuant to the "Change to Practice for Petitions in Patent Applications to Make Special and for Accelerated Examination" published June 26, 2006, in the Federal Register. (71 Fed. Reg. 36323).

The prosecution of the instant application will be conducted expeditiously according to the following guidelines.

1. The application will be docketed to an examiner and taken up for action within two weeks of the date of this decision.

2. Restriction Practice:
   If the examiner determines that the claims are not directed to a single invention, a telephone request to elect one single invention will be made pursuant to MPEP 812.01. As a prerequisite to the grant of this petition, the applicant has agreed to make an oral election, by telephone, without traverse. If the applicant refuses to make an election without traverse, or the examiner cannot reach the applicant after a reasonable effort, the examiner will treat the first claimed invention (invention defined by claim 1) as having being constructively elected without traverse for examination.

3. Office action:
   If it is determined that, after appropriate consultation, there is a potential rejection or any other issue to be addressed, the examiner will telephone the applicant and arrange an interview to discuss and resolve the issue. An Office action, other than a Notice of Allowance and Fee(s) Due (Notice of Allowance), will not be issued unless either: 1) an interview was conducted but did not result in agreed to action that places the application in condition for allowance, or, 2) a determination is made that an interview would be unlikely to result in the application being placed in condition for allowance, and 3) an internal conference has been held to review any rejection of any claim.

4. Time for Reply:
   An Office action other than a Notice of Allowance or a final Office action will set a shortened statutory period of one month or thirty days, whichever is longer, for reply with no extension of time available under 37 CFR 1.136(a). Failure to timely file a reply within this non-extendible period for reply will result in the abandonment of the application.

5. Reply by Applicant:
   A timely reply to an Office action other than the Notice of Allowance must be submitted electronically via EFS or EFS-web and limited to addressing the rejections, objections and requirement made. Any amendment that attempts to: 1) add claims which would result in more than three pending independent claims or more than twenty pending total claims; 2) present claims not encompassed by the pre-examination search or an updated accelerated examination support document; or 3) present claims that are directed a non-elected invention or an invention other than that previously claimed and examined in the application, will be treated as not fully responsive and will not be entered.

   For any amendment to the claims (including any new claim) that is not encompassed by the accelerated examination support document, applicant must provide an updated accelerated examination support document that encompasses the amended or new claims at the time of filing of the amendment.

   To proceed expeditiously with the examination, it is recommended that a reply with amendments made to any claim or with any new claim being added be accompanied by an updated accelerated examination support document or a statement explaining how the amended or new claim is supported by the original accelerated examination support document.

6. Information Disclosure Statement (IDS):
   Any IDS filed during prosecution must be submitted electronically via EFS or EFS-web, accompanied by an updated accelerated examination support document, and be in compliance with 37 CFR 1.97 and 1.98.

7. Post-Allowance Processing:
   To expedite processing of the allowed application into a patent, the applicant must: 1) pay the required fees within one month of the date of the Notice of Allowance, and 2) not file any post allowance papers not required by the Office. In no event may the issue fee be paid and accepted later than three months from the date of the Notice of Allowance.

8. After-Final and Appeal Procedures:
   To expedite prosecution, after receiving the final Office action, applicant must: 1) promptly file a notice of appeal, an appeal brief and appeal fees; and 2) not request a pre-appeal brief conference.

   Any amendment, affidavit or other evidence filed after final Office action must comply with applicable rules and the requirements outlined in numbered paragraphs 5 and 6 above.

   On appeal, the application will proceed according to normal appeal procedures. After appeal, the application will again be treated special.

9. Proceedings Outside the Normal Examination Process:
   If the application becomes involved in a proceeding that is outside the normal examination process (e.g., a secrecy order, national security review, interference proceeding, petitions under 37 CFR 1.181, 182 or 183), the application will be treated special before and after such proceeding.

10. Final Disposition:
    The twelve month goal of this accelerated examination procedure ends with a final disposition. The mailing of a final Office action, a Notice of Allowance, the filing of a Notice of Appeal, or the filing of a Request for Continued Examination (RCE) is the final disposition.

If, during prosecution, a paper is not filed electronically using EFS-web, a reply is filed but is not fully responsive, the application is involved in an appeal, or a proceeding outside normal examination process, the application will still be examined expeditiously; however, the final disposition may occur more than twelve months from the filing of the application.

Any inquiry regarding this decision should be directed to Christine Tierney, Quality Assurance Specialist, at (571) 272-1055.

/Christine Tierney/

Christine Tierney
Quality Assurance Specialist
Technology Center 1700

UNITED STATES PATENT AND TRADEMARK OFFICE

Commissioner for Patents
United States Patent and Trademark Office
P.O. Box 1450
Alexandria, VA 22313-1450
www.uspto.gov

WILSON SONSINI GOODRICH & ROSATI
650 PAGE MILL ROAD
PALO ALTO CA 94304-1050

COPY MAILED

APR 2 2 2009

OFFICE OF PETITIONS

In re Application of	:	
Nurith KURN et al.	:	
Application No. 12/370,534	:	DECISION ON PETITION
Filed: February 12, 2009	:	TO MAKE SPECIAL UNDER
Attorney Docket No. **25115-731.201**	:	37 CFR 1.102(c)(1)
	:	

This is a decision on the petition under 37 CFR 1.102(c)(1), filed March 30, 2009, to make the above-identified application special based on applicant's age as set forth in M.P.E.P. § 708.02, Section IV.

The petition is **GRANTED**.

A grantable petition to make an application special under 37 CFR 1.102(c)(1) and MPEP § 708.02, Section IV: Applicant's Age must be accompanied by evidence showing that at least one of the applicants is 65 years of age, or more, such as a birth certificate or a statement by applicant. No fee is required

The instant petition includes a statement by Nurith Kurn, attesting to his age. Accordingly, the above-identified application will be accorded "special" status.

Telephone inquiries concerning this decision should be directed to Tredelle Jackson at 571-272-2783.

All other inquiries concerning either the examination or status of the application should be directed to the Office of Patent Application Processing.

This application is being referred to the Office of Patent Application Processing. This application will be accorded "special" status when pre-examination processing is done.

Tredelle D. Jackson
Paralegal Specialist
Office of Petitions

UNITED STATES PATENT AND TRADEMARK OFFICE

UNITED STATES DEPARTMENT OF COMMERCE
United States Patent and Trademark Office
Address: COMMISSIONER FOR PATENTS
P.O. Box 1450
Alexandria, Virginia 22313-1450
www.uspto.gov

APPLICATION NO.	FILING DATE	FIRST NAMED INVENTOR	ATTORNEY DOCKET NO.	CONFIRMATION NO.
12/370,553	02/12/2009	Jeong-Ho PARK	0201-0214	5921

7590 05/13/2010

Jefferson IP Law, LLP
1130 Connecticut Ave., NW
Suite 420
Washington, DC 20036

EXAMINER
BOST, DWAYNE D

ART UNIT	PAPER NUMBER
2617	

MAIL DATE	DELIVERY MODE
05/13/2010	PAPER

DECISION GRANTING PETITION UNDER 37 CFR 1.138(d)

The declaration of express abandonment is recognized

This is in response to the petition under 37 CFR 1.138(d), requesting for a refund of any previously paid search fee and excess claims fee in the above-identified application.

The petition is granted.

The express abandonment is recognized. Any previously paid search fee and excess claims fee are hereby refunded.

Telephone inquiries should be directed to the Office of Data Management at (571) 272-4200.

Patent Publication Branch
Office of Data Management

Refund Ref:
[illegible]

Credit Card Refund Totals [illegible]

[illegible]

Adjustment date: 05/13/2010 [illegible]
02/13/2009 INTEFSW [illegible]
02 FC:1111 -540.00 CP
04 FC:1201 -220.00 CP

FORM PET651G (Rev. 08/07)

UNITED STATES PATENT AND TRADEMARK OFFICE

Commissioner for Patents
United States Patent and Trademark Office
P.O. Box 1450
Alexandria, VA 22313-1450
www.uspto.gov

FISH & RICHARDSON P.C.
P.O. BOX 1022
MINNEAPOLIS MN 55440-1022

MAILED

JUL 22 2010

OFFICE OF PETITIONS

In re Application of	:	
Shunpei Yamazaki, et al.	:	
Application No. 12/370,767	:	DECISION GRANTING PETITION
Filed: February 13, 2009	:	UNDER 37 CFR 1.313(c)(2)
Attorney Docket No. 12732-0168003	:	

This is a decision on the petition under 37 CFR 1.313(c)(2), filed, July 21, 2010 to withdraw the above-identified application from issue after payment of the issue fee.

The petition is **GRANTED**.

The above-identified application is withdrawn from issue for consideration of a submission under 37 CFR 1.114 (request for continued examination). *See* 37 CFR 1.313(c)(2).

Petitioner is advised that the issue fee paid on June 29, 2009 cannot be refunded. If, however, this application is again allowed, petitioner may request that it be applied towards the issue fee required by the new Notice of Allowance.[1]

Telephone inquiries should be directed to Terri Johnson at (571) 272-2991.

This application is being referred to Technology Center AU 2891 for processing of the request for continued examination under 37 CFR 1.114 and for consideration of the concurrently filed information disclosure statement.

Terri Johnson
Petitions Examiner
Office of Petitions

---

[1] *The request to apply the issue fee to the new Notice may be satisfied by completing and returning the new Part B – Fee(s) Transmittal Form (along with any balance due at the time of submission). Petitioner is advised that the Issue Fee Transmittal Form must be completed and timely submitted to avoid abandonment of the application.*

UNITED STATES PATENT AND TRADEMARK OFFICE

Commissioner for Patents
United States Patent and Trademark Office
P.O. Box 1450
Alexandria, VA 22313-1450
www.uspto.gov

MAILED
JUL 07 2010
OFFICE OF PETITIONS

THE PROCTER & GAMBLE COMPANY
GLOBAL LEGAL DEPARTMENT - IP
SYCAMORE BUILDING - 4TH FLOOR
299 EAST SIXTH STREET
CINCINNATI, OH 45202

In re Application of	:	
Turner et al.	:	
Application No. 12/370,850	:	DECISION ON PETITION
Filed: February 13, 2009	:	
Attorney Docket No. 9683MC	:	

This is a decision on the petition under the unintentional provisions of 37 CFR 1.137(b), filed June 11, 2010 to revive the above-identified application.

The petition is **GRANTED**.

This application became abandoned for failure to timely pay the issue and publication fees on or before June 9, 2010, as required by the Notice of Allowance and Fee(s) Due mailed March 9, 2010, which set a period for reply of three (3) months. Accordingly, this application became abandoned on June 10, 2010.

The petition satisfies the requirements of 37 CFR 1.137(b) in that petitioner has supplied (1) the reply in the form the issue fee of $1,510 and publication fee of $300, (2) the petition fee of $1,620, and (3) a proper statement of unintentional delay. Accordingly, the failure to timely submit the issue fee as required by the Notice of Allowance and Fee(s) Due is accepted as being unintentionally delayed.

Telephone inquiries concerning this decision should be directed to Alicia Kelley at (571)272-6059.

This application is being referred to the Office of Data Management for processing into a patent.

Carl Friedman
Petitions Examiner
Office of Petitions

UNITED STATES PATENT AND TRADEMARK OFFICE

Commissioner for Patents
United States Patent and Trademark Office
P.O. Box 1450
Alexandria, VA 22313-1450
www.uspto.gov

COOLEY GODWARD KRONISH LLP
ATTN: Patent Group
Suite 1100
777 - 6th Street, NW
WASHINGTON DC 20001

COPY MAILED

JUL 0 1 2009

OFFICE OF PETITIONS

In re Application of	:	
Gopi Venkatesh, et al.	:	
Application No. 12/370,852	:	DECISION ON PETITION
Filed: February 13, 2009	:	TO MAKE SPECIAL UNDER
Attorney Docket No. EURA-092/01US 307853-2444	:	37 CFR 1.102(c)(1)
	:	

This is a decision on the petition under 37 CFR 1.102(c)(1), filed June 4, 2009, to make the above-identified application special based on applicant's age as set forth in M.P.E.P. § 708.02, Section IV.

The petition is **GRANTED**.

A grantable petition to make an application special under 37 CFR 1.102(c)(1) and MPEP § 708.02, Section IV: Applicant's Age must be accompanied by evidence showing that at least one of the applicants is 65 years of age, or more, such as a birth certificate or a statement by applicant. No fee is required

The instant petition includes a statement from the first named inventor declaring that he is 65 years of age or older. Accordingly, the above-identified application has been accorded "special" status.

Telephone inquiries concerning this decision should be directed to Terri Williams at 571-272-2991.

All other inquiries concerning either the examination or status of the application should be directed to the Technology Center.

The application is being forwarded to the Technology Center Art Unit 1615 for action on the merits commensurate with this decision.

Terri Williams

Terri Williams
Petitions Examiner
Office of Petitions

UNITED STATES PATENT AND TRADEMARK OFFICE

UNITED STATES DEPARTMENT OF COMMERCE
United States Patent and Trademark Office
Address: COMMISSIONER FOR PATENTS
P.O. Box 1450
Alexandria, Virginia 22313-1450
www.uspto.gov

APPLICATION NO.	FILING DATE	FIRST NAMED INVENTOR	ATTORNEY DOCKET NO.	CONFIRMATION NO.
12/370,997	02/13/2009	Charles B. ALMY	10031.005200	6736

74254 7590 02/19/2010
Okamoto & Benedicto LLP
P.O. Box 641330
San Jose, CA 95164-1330

EXAMINER
PRICE, CARL D

ART UNIT	PAPER NUMBER
3749	

MAIL DATE	DELIVERY MODE
02/19/2010	PAPER

Please find below and/or attached an Office communication concerning this application or proceeding.

The time period for reply, if any, is set in the attached communication.

UNITED STATES PATENT AND TRADEMARK OFFICE

Commissioner for Patents
United States Patent and Trademark Office
P.O. Box 1450
Alexandria, VA 22313-1450
www.uspto.gov

Okamoto & Benedicto LLP
P.O. Box 641330
San Jose CA 95164-1330

In re Application of	:	
ALMY, CHARLES B. et al	:	DECISION ON PETITION
Application No. 12/370,997	:	TO MAKE SPECIAL UNDER
Filed: Feb. 13, 2009	:	THE GREEN TECHNOLOGY
Attorney Docket No. 10031.005200	:	PILOT PROGRAM
Title: EARTH-PENETRATING EXPANSION ANCHOR		

This is a decision on the petition under 37 CFR 1.102, filed February 5, 2010, to make the above-identified application special under the pilot program for applications pertaining to Green Technologies as set forth 74 Federal Register Notice 64666 (December 8, 2009).

The petition is **GRANTED**.

A grantable petition to make an application special under 37 CFR 1.102 and the pilot program as set forth in 74 FR 64666 must be directed to a nonprovisional application filed under 35 USC 111(a) or be a national stage entry under 35 USC 371, exclusive of any reissue applications and be filed prior to the date of the notice, December 8, 2009.

In order to qualify for special status, the following requirements must be met. 1) The application must be classified in one of the eligible US classifications listed in section VI of the notice. 2) The application must have no more than 3 independent claims and no more than 20 total claims. 3) The application must not contain any multiple dependent claims. 4) The petition must state the basis for seeking special status, i.e., the claimed invention either: A) materially enhances the quality of the environment or B) materially contributes to: i) the discovery or development of renewable energy resources, ii) the more efficient utilization and conservation of energy resources, or iii) greenhouse gas emission reduction. 5) If the disclosure is not clear on its face that the claimed invention materially contributes under category (A) or (B), the petition must be accompanied by a statement by the applicant, assignee, or an attorney/agent registered to practice before the Office explaining how the materiality standard is met. 6) A statement that applicant will agree to make an election without traverse in a telephonic interview if a restriction requirement is made by the examiner. 7) The petition to make special must be filed electronically. 8) The petition must be filed at least one day prior to the date that a first Office Action appears in the Patent Application Information Retrieval (PAIR) system. 9) The petition

must be accompanied by a request for early publication in compliance with 37 CFR 1.219 and include the publication fee as set forth in 37 CFR 1.18(d).

The requirement for a fee for consideration of the petition to make special for applications pertaining to Green Technologies has been waived.

The instant petition complies with items 1 – 9 above. Accordingly, the above-identified application has been accorded "special" status.

Telephone inquires concerning this decision should be directed to Henry C. Yuen at 571-272-3468

The application is being forwarded to the Technology Center Art Unit 3749 for action on the merits commensurate with this decision.

/Henry C. Yuen/

Henry C. Yuen
Quality Assurance Specialist
Technology Center 3700

UNITED STATES PATENT AND TRADEMARK OFFICE

UNITED STATES DEPARTMENT OF COMMERCE
United States Patent and Trademark Office
Address: COMMISSIONER FOR PATENTS
P.O. Box 1450
Alexandria, Virginia 22313-1450
www.uspto.gov

APPLICATION NO.	FILING DATE	FIRST NAMED INVENTOR	ATTORNEY DOCKET NO.	CONFIRMATION NO.
12/371,032	02/13/2009	Curtis Harris	D-296	6804

23413 7590 02/24/2010
CANTOR COLBURN, LLP
20 Church Street
22nd Floor
Hartford, CT 06103

EXAMINER
GONZALEZ QUINONE, JOSE A

ART UNIT	PAPER NUMBER
2834	

NOTIFICATION DATE	DELIVERY MODE
02/24/2010	ELECTRONIC

Please find below and/or attached an Office communication concerning this application or proceeding.

The time period for reply, if any, is set in the attached communication.

Notice of the Office communication was sent electronically on above-indicated "Notification Date" to the following e-mail address(es):

usptopatentmail@cantorcolburn.com

UNITED STATES PATENT AND TRADEMARK OFFICE

Commissioner for Patents
United States Patent and Trademark Office
P.O. Box 1450
Alexandria, VA 22313-1450
www.uspto.gov

CANTOR COLBURN, LLP
20 Church Street
22nd Floor
Hartford CT 06103

In re Application of	:	
HARRIS et al.	:	DECISION ON PETITION
Application No. 12/371,032	:	TO MAKE SPECIAL UNDER
Filed: 12 February 2009	:	THE GREEN TECHNOLOGY
Attorney Docket No. D-296	:	PILOT PROGRAM

This is a decision on the petition under 37 CFR 1.102, filed 12 February 2010, to make the above-identified application special under the pilot program for applications pertaining to Green Technologies as set forth 74 Federal Register Notice 64666 (December 8, 2009).

The petition is **DISMISSED**.

If reconsideration of this decision is desired, a petition for reconsideration must be filed within ONE (1) MONTH OR THIRTY (30) DAYS from the mail date of this decision, whichever is longer. No extension of this time limit can be granted under 37 CFR 1.136(a) or (b). The petition for reconsideration should include an exhaustive attempt to provide the lacking item(s) noted below, since, after a decision on the petition for reconsideration, no further reconsideration or review of the matter will be undertaken by the Director.

A grantable petition to make an application special under 37 CFR 1.102 and the pilot program as set forth in 74 FR 64666 must be directed to a nonprovisional application filed under 35 USC 111(a) or be a national stage entry under 35 USC 371, exclusive of any reissue applications and be filed prior to the date of the notice, December 8, 2009.

In order to qualify for special status, the following requirements must be met. 1) The application must be classified in one of the eligible US classifications listed in section VI of the notice. 2) The application must have no more than 3 independent claims and no more than 20 total claims. 3) The application must not contain any multiple dependent claims. 4) The petition must state the basis for seeking special status, i.e., the claimed invention either: A) materially enhances the quality of the environment or B) materially contributes to: i) the discovery or development of renewable energy resources, ii) the more efficient utilization and conservation of energy resources, or iii) greenhouse gas emission reduction. 5) If the disclosure is not clear on its face that the claimed invention materially contributes under category (A) or (B), the petition must be accompanied by a statement by the applicant, assignee, or an attorney/agent registered to practice before the Office explaining how the materiality standard is met. 6) A statement that applicant

will agree to make an election without traverse in a telephonic interview if a restriction requirement is made by the examiner. 7) The petition to make special must be filed electronically. 8) The petition must be filed at least one day prior to the date that a first Office Action appears in the Patent Application Information Retrieval (PAIR) system. 9) The petition must be accompanied by a request for early publication in compliance with 37 CFR 1.219 and include the publication fee as set forth in 37 CFR 1.18(d).

The requirement for a fee for consideration of the petition to make special for applications pertaining to Green Technologies has been waived.

The petition lacks item 2 above.

In regard to item 2, petitioner should note that a review of the application claims has been made for the purposes of determining the number of claims contained therein. This application contains more than 3 independent claims and/or more than 20 total claims. As set forth in the Notice, if the application contains more than 3 independent claims or more than 20 total claims, it will not be eligible to participate in the "Pilot Program for Green Technologies Including Greenhouse Gas Reduction."

Any reconsideration of this decision should be submitted through the USPTO electronic filing system, EFS-Web, and selecting the document description of "Petition for Green Tech Pilot" on the EFS-Web screen.

Telephone inquires concerning this decision should be directed to Lee W. Young at 571-272-4549.

The application is being forwarded to the Technology Center Art Unit 2834 for action on the merits commensurate with this decision.

Lee W. Young
Quality Assurance Specialist
Technology Center 2800

UNITED STATES PATENT AND TRADEMARK OFFICE

UNITED STATES DEPARTMENT OF COMMERCE
United States Patent and Trademark Office
Address: COMMISSIONER FOR PATENTS
P.O. Box 1450
Alexandria, Virginia 22313-1450
www.uspto.gov

APPLICATION NO.	FILING DATE	FIRST NAMED INVENTOR	ATTORNEY DOCKET NO.	CONFIRMATION NO.
12/371,042	02/13/2009	William Patrick WEAVER	8215-000042	6827

27572 7590 02/16/2010
HARNESS, DICKEY & PIERCE, P.L.C.
P.O. BOX 828
BLOOMFIELD HILLS, MI 48303

EXAMINER

ART UNIT	PAPER NUMBER
1797	

MAIL DATE	DELIVERY MODE
02/16/2010	PAPER

Please find below and/or attached an Office communication concerning this application or proceeding.

The time period for reply, if any, is set in the attached communication.

UNITED STATES PATENT AND TRADEMARK OFFICE

Commissioner for Patents
United States Patent and Trademark Office
P.O. Box 1450
Alexandria, VA 22313-1450
www.uspto.gov

HARNESS, DICKEY & PIERCE, P.L.C.
P.O. BOX 828
BLOOMFIELD HILLS MI 48303

FEB 16 2010

In re Application of	:	
Weaver et al.	:	DECISION ON PETITION
Application No. 12/371,042	:	TO MAKE SPECIAL UNDER
Filed: 2/13/2009	:	THE GREEN TECHNOLOGY
Attorney Docket No. **8215-000042**	:	PILOT PROGRAM

This is a decision on the petition under 37 CFR 1.102, filed 2/2/2010, to make the above-identified application special under the pilot program for applications pertaining to Green Technologies as set forth 74 Federal Register Notice 64666 (December 8, 2009).

The petition is **DISMISSED**.

If reconsideration of this decision is desired, a petition for reconsideration must be filed within ONE (1) MONTH OR THIRTY (30) DAYS from the mail date of this decision, whichever is longer. No extension of this time limit can be granted under 37 CFR 1.136(a) or (b). The petition for reconsideration should include an exhaustive attempt to provide the lacking item(s) noted below, since, after a decision on the petition for reconsideration, no further reconsideration or review of the matter will be undertaken by the Director.

A grantable petition to make an application special under 37 CFR 1.102 and the pilot program as set forth in 74 FR 64666 must be directed to a nonprovisional application filed under 35 USC 111(a) or be a national stage entry under 35 USC 371, exclusive of any reissue applications and be filed prior to the date of the notice, December 8, 2009.

In order to qualify for special status, the following requirements must be met. 1) The application must be classified in one of the eligible US classifications listed in section VI of the notice. 2) The application must have no more than 3 independent claims and no more than 20 total claims. 3) The application must not contain any multiple dependent claims. 4) The petition must state the basis for seeking special status, i.e., the claimed invention either: A) materially enhances the quality of the environment or B) materially contributes to: i) the discovery or development of renewable energy resources, ii) the more efficient utilization and conservation of energy resources, or iii) greenhouse gas emission reduction. 5) If the disclosure is not clear on its face that the claimed invention materially contributes under category (A) or (B), the petition must be accompanied by a statement by the applicant, assignee, or an attorney/agent registered to practice

before the Office explaining how the materiality standard is met. 6) A statement that applicant will agree to make an election without traverse in a telephonic interview if a restriction requirement is made by the examiner. 7) The petition to make special must be filed electronically. 8) The petition must be filed at least one day prior to the date that a first Office Action appears in the Patent Application Information Retrieval (PAIR) system. 9) The petition must be accompanied by a request for early publication in compliance with 37 CFR 1.219 and include the publication fee as set forth in 37 CFR 1.18(d).

The requirement for a fee for consideration of the petition to make special for applications pertaining to Green Technologies has been waived.

The petition lacks item(s) 1.

In regard to item 1, petitioner should note that this application has been classified in an area (USPC 435/292.100) that is not one of the eligible US classifications listed in section VI of the notice. Therefore, this application is not eligible for the Pilot Program. The classification limitations are purposefully made to be narrow for the Pilot Program; however, these may be expanded based upon the success of the Pilot Program. Petitioner may file a preliminary amendment that would cause this application to be classified elsewhere. However, while petitioner may suggest a classification (see, e.g., MPEP 708.02(a)(VII)(C)), the application will be assigned to the most appropriate classification based upon current U.S. classification guidelines. Furthermore, a petition for the Pilot Program should not be filed until and unless all of the requirements set forth in the Notice are met; i.e., a petition should not be filed for an application that is currently classified outside the eligible classifications set forth in the Notice.

Any reconsideration of this decision should be submitted through the USPTO electronic filing system, EFS-Web, and selecting the document description of "Petition for Green Tech Pilot" on the EFS-Web screen.

Telephone inquiries concerning this decision should be directed to Tom Dunn at 571-272-1171.

The application is being forwarded to the Technology Center Art Unit 1797 for action in its regular turn.

/Tom Dunn/

Tom Dunn
Quality Assurance Specialist
Technology Center 1700

UNITED STATES PATENT AND TRADEMARK OFFICE

UNITED STATES DEPARTMENT OF COMMERCE
United States Patent and Trademark Office
Address: COMMISSIONER FOR PATENTS
P.O. Box 1450
Alexandria, Virginia 22313-1450
www.uspto.gov

APPLICATION NO.	FILING DATE	FIRST NAMED INVENTOR	ATTORNEY DOCKET NO.	CONFIRMATION NO.
12/371,042	02/13/2009	William Patrick WEAVER	8215-000042	6827

27572 7590 04/07/2010
HARNESS, DICKEY & PIERCE, P.L.C.
P.O. BOX 828
BLOOMFIELD HILLS, MI 48303

EXAMINER

ART UNIT	PAPER NUMBER
1797	

MAIL DATE	DELIVERY MODE
04/07/2010	PAPER

Please find below and/or attached an Office communication concerning this application or proceeding.

The time period for reply, if any, is set in the attached communication.

UNITED STATES PATENT AND TRADEMARK OFFICE

Commissioner for Patents
United States Patent and Trademark Office
P.O. Box 1450
Alexandria, VA 22313-1450
www.uspto.gov

4/7/10

CST

In re application of William Patrick Weaver et al Serial No. 12/371,042 Filed: February 13, 2009 For: PHOTOBIOREACTOR	: : : : :	DECISION ON PETITION TO MAKE SPECIAL

This is a decision on the petition filed on March 29, 2010 to make the above-identified application special under the accelerated examination program.

The petition to make the application special is **DENIED.**

REGULATION AND PRACTICE

To be eligible for accelerated examination under 37 C.F.R. § 1.102(d) and pursuant to the "Changes to Practice for Petitions in Patent Applications to Make Special and for Accelerated Examination" published in the Federal Register on June 26, 2006 (71 Fed. Reg. 36323), the following conditions must be satisfied:

I. Conditions Regarding the Application:

1. The application must be a non-reissue utility or design application filed under 37 CFR 1.111(a);
2. The application, the petition and the required fees must be filed electronically using the USPTO's electronic filing system (EFS), or EFS-web; if not filed electronically, a statement asserting that EFS and EFS-web were not available during the normal business hours;
3. The application, at the time of filing, must be complete under 37 CFR 1.51 and in condition for examination;
4. The application must contain three or fewer independent claims and twenty or fewer total claims and the claims must be directed to a single invention.

II. Conditions Regarding the Petition:

The petition must:

1. be filed with the application;

2. include a statement that applicant agrees not to separately argue the patentability of any dependent claim during any appeal in the application;

3. include a statement that applicant agrees to make an election without traverse in a telephone interview;

4. include a statement that applicant agrees to conduct such an interview when requested by the examiner;

5. include a statement, made based on a good faith belief, that a preexamination search in compliance with the following requirements, was conducted, including an identification of the field of search by United States class and subclass, where applicable, and for database searches, the search logic or chemical structure or sequence used as a query, the name of the file(s) searched and the database service, and the date of the search.

The preexamination search must:

5.1 involve U.S. patents and patent application publications, foreign patent documents, and non-patent literature, unless the applicant can justify with reasonable certainty that no references more pertinent than those already identified are likely to be found in the eliminated sources and includes such a justification with this statement;

5.2. be directed to the claimed invention and encompass all of the features of the claims, giving the claims the broadest reasonable interpretation;

5.3. encompass the disclosed features that may be claimed.

6. must provide in support of the petition an accelerated examination support document.

An accelerated examination support document must include:

6.1. an information disclosure statement (IDS) in compliance with 37 CFR 1.98 citing each reference deemed most closely related to the subject matter of each of the claims;

6.2. an identification of all the limitations in the claims that are disclosed by the reference specifying where the limitation is disclosed in the cited reference;

6.3. a detailed explanation of how each of the claims are patentable over the references cited with particularity required by 37 CFR 1.111(b) and (c);

6.4. a concise statement of the utility of the invention as defined in each of the independent claims (unless the application is a design application);

6.5. a showing of where each limitation of the claims finds support under 35 USC 112, first paragraph, in the written description of the specification. If applicable, the showing must also identify: (1) each means- (or step) plus-function claim element that invokes consideration under 35 USC 112, sixth paragraph; and (2) the structure, material, or acts in the specification that corresponds to each means- (or step) plus-function claim element that invokes consideration under 35 USC 112, sixth paragraph; if the application claims the benefit of one or more applications under title 35, United States Code, the showing must also include where each limitation of the claims finds support under 35 USC 112, first paragraph, in each such application in which such supports exists;

6.6. an identification of any cited references that may be disqualified under 35 USC 103(c).

REVIEW OF FACTS

The conditions regarding the application (section I, subsections 1-4) discussed above are considered to have been met.

However, the petition fails to comply with condition II, subsections 1-6. Specifically, the petition to make special was not filed concurrently with the application. Applicant did not provide a statement that a preexamination search was conducted at the time of filing, and no accelerated examination support document was provided at the time of filing. Note MPEP 708.02(a), sections I (H) and (I).

For the above-stated reasons, the petition is denied. The application will therefore be taken up by the examiner for action in its regular turn.

Any inquiry regarding this decision should be directed to Christine Tierney, Quality Assurance Specialist, at (571) 272-1055.

/Christine Tierney/

Christine Tierney
Quality Assurance Specialist
Technology Center 1700

UNITED STATES PATENT AND TRADEMARK OFFICE

Commissioner for Patents
United States Patent and Trademark Office
P.O. Box 1450
Alexandria, VA 22313-1450
www.uspto.gov

DEAN P. ALDERUCCI
CANTOR FITZGERALD, L.P.
110 EAST 59TH STREET (6TH FLOOR)
NEW YORK NY 10022

MAILED

MAY 26 2009

OFFICE OF PETITIONS

In re Application of	:	
GINSBERG, Philip M. et al.	:	
Application No. 12/371,064	:	DECISION ON PETITION
Filed: February 13, 2009	:	TO MAKE SPECIAL UNDER
Attorney Docket No. **00-1019-C3**	:	37 CFR 1.102(c)(1)
	:	

This is a decision on the petition under 37 CFR 1.102(c)(1), filed April 21, 2009, to make the above-identified application special based on applicant's age as set forth in M.P.E.P. § 708.02, Section IV.

The petition is **GRANTED**.

A grantable petition to make an application special under 37 CFR 1.102(c)(1) and MPEP § 708.02, Section IV: Applicant's Age must be accompanied by evidence showing that at least one of the applicants is 65 years of age, or more, such as a birth certificate or a statement by applicant. No fee is required

The instant petition includes a statement by Philip Ginsberg, attesting to his age. Accordingly, the above-identified application has been accorded "special" status.

Telephone inquiries concerning this decision should be directed to Tredelle Jackson at 571-272-2783.

All other inquiries concerning either the examination or status of the application should be directed to the Technology Center.

The application is being forwarded to the Technology Center Art Unit 3691 for action on the merits commensurate with this decision.

Tredelle D. Jackson
Paralegal Specialist
Office of Petitions

UNITED STATES PATENT AND TRADEMARK OFFICE

COMMISSIONER FOR PATENTS
UNITED STATES PATENT AND TRADEMARK OFFICE
P.O. BOX 1450
ALEXANDRIA, VA 22313-1450
www.uspto.gov

FISH & RICHARDSON PC
P.O. BOX 1022
MINNEAPOLIS MN 55440-1022

COPY MAILED

DEC 23 2009

OFFICE OF PETITIONS

In re Application of	:	DECISION
Strickon, et al.	:	
Application No. 12/371,067	:	
Filed: 13 February, 2009	:	
Attorney Docket No. 12206-0005002	:	

This is a decision on the petition filed on 2 November, 2009, pursuant to 37 C.F.R. §1.137(b) for revival of an application abandoned due to unintentional delay .

The petition pursuant to 37 C.F.R. §1.137(b) is **GRANTED**.

As to the Allegations
of Unintentional Delay

The requirements of a grantable petition pursuant to 37 C.F.R. §1.137(b) are the petition and fee therefor, a reply, a proper statement of unintentional delay under the regulation, and, where applicable, a terminal disclaimer and fee.

Petitioners' attentions always are directed to the guidance in the Commentary at MPEP §711.03(c)(II).

BACKGROUND

The record reflects as follows:

Petitioner failed to reply timely and properly to the Notice to File Corrected Application Papers mailed on 3 March, 2009, with reply due absent an extension of time on or before 3 May, 2009.

The application went abandoned by operation of law after midnight 3 June, 2009—Petitioner erroneously and inappropriately states the date as 3 October, 2009.

It does not appear that the Office mailed the Notice of Abandonment before a petition was filed.

On 2 November, 2009, Petitioner filed, *inter alia*, a petition (with fee) pursuant to 37 C.F.R. §1.137(b), a reply in the form of corrected application papers, and made the statement of unintentional delay.

Petitioner also filed a request and fee for extension of time—which Petitioner as one registered to practice before the Office knows is not appropriate after the expiration of the statutory period. The fee is being refunded. Should Petitioner later find that the fee for extension of time was not refunded, Petitioner should request a refund from the Office of Finance and provide therewith a copy of this decision.

The availability of applications and application papers online to applicants/practitioners who diligently associate their Customer Number with the respective application(s) now provides an applicant/practitioner on-demand information as to events/transactions in an application.

Out of an abundance of caution, Petitioners always are reminded that those registered to practice and all others who make representations before the Office **must** inquire into the underlying facts of representations made to the Office and support averments with the appropriate documentation–since all owe to the Office the continuing duty to disclose.[1]

STATUTES, REGULATIONS AND ANALYSIS

Congress has authorized the Commissioner to "revive an application if the delay is shown to the satisfaction of the Commissioner to have been "unavoidable." 35 U.S.C. §133 (1994).[2]
The regulations at 37 C.F.R. §1.137(a) and (b) set forth the requirements for a Petitioner to revive a previously unavoidably or unintentionally, respectively, abandoned application under this congressional grant of authority.

Unintentional delays are those that do not satisfy the very strict statutory and regulatory requirements of unavoidable delay, and also, by definition, are not intentional.[3]))

---

[1] See supplement of 17 June, 1999. The Patent and Trademark Office is relying on petitioner's duty of candor and good faith and accepting a statement made by Petitioner. See Changes to Patent Practice and Procedure, 62 Fed. Reg. at 53160 and 53178, 1203 Off. Gaz. Pat. Office at 88 and 103 (responses to comments 64 and 109)(applicant obligated under 37 C.F.R. §10.18 to inquire into the underlying facts and circumstances when providing statements to the Patent and Trademark Office).

[2] 35 U.S.C. §133 provides:

35 U.S.C. §133 Time for prosecuting application.

Upon failure of the applicant to prosecute the application within six months after any action therein, of which notice has been given or mailed to the applicant, or within such shorter time, not less than thirty days, as fixed by the Commissioner in such action, the application shall be regarded as abandoned by the parties thereto, unless it be shown to the satisfaction of the Commissioner that such delay was unavoidable.

[3] Therefore, by example, an unintentional delay in the reply might occur if the reply and transmittal form are to be prepared for shipment by the US Postal Service, but other pressing matters distract one's attention and the mail is not timely deposited for shipment.

As to Allegations of
Unintentional Delay

The requirements of a grantable petition pursuant to 37 C.F.R. §1.137(b) are the petition and fee therefor, a reply, a proper statement of unintentional delay under the regulation, and, where applicable, a terminal disclaimer and fee.

It appears that the requirements under the rule have been satisfied.

CONCLUSION

Accordingly, the petition pursuant to 37 C.F.R. §1.137(b) is **granted**.

The instant application is released to the Office of Patent Application Processing (OPAP) for further processing in due course.

Petitioner may find it beneficial to view Private PAIR within a fortnight of the instant decision to ensure that the revival has been acknowledged by the OPAP in response to this decision. It is noted that all inquiries with regard to that change in status need be directed to the OPAP where that change of status must be effected—that does not occur in the Office of Petitions.

Telephone inquiries regarding this decision may be directed to the undersigned at (571) 272-3214—it is noted, however, that all practice before the Office is in writing (see: 37 C.F.R. §1.2[4]) and the proper authority for action on any matter in this regard are the statutes (35 U.S.C.), regulations (37 C.F.R.) and the commentary on policy (MPEP). Therefore, no telephone discussion may be controlling or considered authority for Petitioner's action(s).

/John J. Gillon, Jr./
John J. Gillon, Jr.
Senior Attorney
Office of Petitions

[4] The regulations at 37 C.F.R. §1.2 provide:
§1.2 Business to be transacted in writing.
All business with the Patent and Trademark Office should be transacted in writing. The personal attendance of applicants or their attorneys or agents at the Patent and Trademark Office is unnecessary. The action of the Patent and Trademark Office will be based exclusively on the written record in the Office. No attention will be paid to any alleged oral promise, stipulation, or understanding in relation to which there is disagreement or doubt.

UNITED STATES PATENT AND TRADEMARK OFFICE

Commissioner for Patents
United States Patent and Trademark Office
P.O. Box 1450
Alexandria, VA 22313-1450
www.uspto.gov

Leviton Manufacturing Company Incorporated (CDFS)
c/o Carter, DeLuca, Farrell & Schmidt, LLP
445 Broad Hollow Rd. Ste. 420
Melville NY 11747

MAILED

APR 09 2010

OFFICE OF PETITIONS

In re Application of
Germain et al.
Application No. 12/371,141
Filed: February 13, 2009
Attorney Docket No. 1640-59 CON
For: RESET LOCKOUT FOR SLIDING LATCH GFCI

ON PETITION

This is a decision on (1) the petition under 37 CFR 1.48(a) to amend the inventive entity by addition of John J. Power and Armando Calixto and removal of Stephen Stewart, Steve Campolo, Nicholas L. DiSalvo, and William R. Ziegler and (2) as authorized by 37 CFR 1.48(a)(3), the petition under 37 CFR 1.47(a), to accept the declaration filed February 9, 2010, which lacks the signature of Frantz Germain, as required by 37 CFR 1.63. Both petitions were filed on February 9, 2010.

Deposit account no. 12-1185 will be charged the required $130.00 Rule 48 petition fee.

The petition under 37 CFR 1.48(a) is **dismissed**.

The petition under 37 CFR 1.47(a) is **dismissed**.

Any request for reconsideration of this decision must be submitted within TWO (2) MONTHS from the mail date of this decision. Extensions of time under 37 CFR 1.136(a) are permitted. FAILURE TO TIMELY RENEW THE PETITION WILL RESULT IN ABANDONMENT. The reconsideration request should include a cover letter entitled "Renewed Petitions under 37 CFR 1.48 and 1.47."

A declaration, filed on February 13, 2009, listed six joint inventors: Frantz Germain, Stephen Stewart, David Herzfeld, Steve Campolo, Nicholas L. DiSalvo, and William R. Ziegler. Petitioners wish to add John J. Power and Armando Calixto as joint inventors. Petitioners wish to delete Stephen Stewart, Steve Campolo, Nicholas L. DiSalvo, and William R. Ziegler as joint inventors.

37 CFR 1.48(a) requires that an amendment to the named inventive entity be accompanied by: (1) a petition setting forth the desired change in inventorship, (2) including a statement from each

person being added and from each person being deleted as an inventor that the error occurred without deceptive intention on his or her part; (3) an oath or declaration by each actual inventor or inventors as required by 37 CFR 1.63 or as permitted by 37 CFR 1.42, 1.43 or 1.47; (4) the fee set forth in 37 CFR 1.17 (i); and (5) the written consent of any existing assignee, if any of the originally named inventors has executed an assignment.

The petitions of record lack compliance with item (5), and because item (5) is lacking, item (3) is also.

With respect to (5) above, the assignee must establish its ownership of the application in accordance with 37 CFR 3.73. MPEP § 324. *See* MPEP 201.03. Furthermore, the statement by the assignee addresses only the addition of John J. Power and Armando Calixto as joint inventors. It is silent regarding the deletion of Stephen Stewart, Steve Campolo, Nicholas L. DiSalvo, and William R. Ziegler as joint inventors.

The entire showing of record does not currently warrant acceptance of the declaration under 37 CFR 1.63 and 37 CFR 1.48(a)(3), so as to amend the inventive entity of record under 37 CFR 1.48(a).

A grantable petition under 37 CFR 1.47(a) requires: (1) proof that the non-signing inventor cannot be reached or located, notwithstanding diligent effort, or refuses to sign the oath or declaration after having been presented with the application papers (specification, claims and drawings); (2) an acceptable oath or declaration in compliance with 35 U.S.C. §§ 115 and 116; (3) the petition fee; and (4) a statement of the last known address of the non-signing inventor.

The constructive Rule 47 petition lacks item (2) set forth above.

Because the petition under 37 CFR 1.48(a) is dismissed, the inventive entity has not been changed. Therefore, the appropriate declaration under 37 CFR 1.63 required for the petition under 37 CFR 1.47 has not been filed.

Further correspondence with respect to this matter should be addressed as follows:

By mail:
Mail Stop PETITION
Commissioner for Patents
Post Office Box 1450
Alexandria, VA 22313-1450

By hand:
U.S. Patent and Trademark Office
Customer Service Window, Mail Stop Petition
Randolph Building
401 Dulany Street
Alexandria, VA 22314

By FAX:
(571) 273-8300 - ATTN: Office of Petitions

Telephone inquiries pertaining to this decision should be directed to the undersigned at (571) 272-3230.

Shirene Willis Brantley

Shirene Willis Brantley
Senior Petitions Attorney
Office of Petitions

UNITED STATES PATENT AND TRADEMARK OFFICE

Commissioner for Patents
United States Patent and Trademark Office
P.O. Box 1450
Alexandria, VA 22313-1450
www.uspto.gov

Leviton Manufacturing Company Incorporated (CDFS)
c/o Carter, DeLuca, Farrell & Schmidt, LLP
445 Broad Hollow Rd. Ste. 420
Melville NY 11747

MAILED

JUN 2 1 2010

OFFICE OF PETITIONS

In re Application of
Germain et al.
Application No. 12/371,141
Filed: February 13, 2009
Attorney Docket No. 1640-59 CON
For: RESET LOCKOUT FOR SLIDING LATCH GFCI

ON PETITION

This is a decision on (1) the renewed petition under 37 CFR 1.48(a) to amend the inventive entity by addition of John J. Power and Armando Calixto and removal of Stephen Stewart, Steve Campolo, Nicholas L. DiSalvo, and William R. Ziegler and (2) as authorized by 37 CFR 1.48(a)(3), the renewed petition under 37 CFR 1.47(a), to accept the declaration filed February 9, 2010, which lacks the signature of Frantz Germain, as required by 37 CFR 1.63. Both petitions were filed in the same paper on May 18, 2010.

The petition under 37 CFR 1.48(a) is **granted**.

The petition under 37 CFR 1.47(a) is **granted**.

A declaration, filed on February 13, 2009, listed six joint inventors: Frantz Germain, Stephen Stewart, David Herzfeld, Steve Campolo, Nicholas L. DiSalvo, and William R. Ziegler. Petitioners wish to add John J. Power and Armando Calixto as joint inventors. Petitioners wish to delete Stephen Stewart, Steve Campolo, Nicholas L. DiSalvo, and William R. Ziegler as joint inventors.

37 CFR 1.48(a) requires that an amendment to the named inventive entity be accompanied by: (1) a petition setting forth the desired change in inventorship, (2) including a statement from each person being added and from each person being deleted as an inventor that the error occurred without deceptive intention on his or her part; (3) an oath or declaration by each actual inventor or inventors as required by 37 CFR 1.63 or as permitted by 37 CFR 1.42, 1.43 or 1.47; (4) the fee set forth in 37 CFR 1.17 (i); and (5) the written consent of any existing assignee, if any of the originally named inventors has executed an assignment.

The present petition satisfies the above-listed requirements.

Petitioner has established that Frantz Germain has constructively refused to execute the combined declaration and power of attorney.

As both the petition under 37 CFR 1.47(a) and 37 CFR 1.48(a) are granted, the inventive entity has been changed. Petitioners have shown that this nonprovisional application, as filed, through error and without deceptive intent, improperly set forth the inventorship, and, accordingly, this application has been corrected in compliance with 37 CFR 1.48(a). The inventorship of this application has been changed by addition of John J. Power and Armando Calixto and removal of Stephen Stewart, Steve Campolo, Nicholas L. DiSalvo, and William R. Ziegler.

Please find enclosed a corrected filing receipt that reflects the inventorship change.

This application is being referred to Technology Center A.U. 2836 for examination in due course.

Telephone inquiries pertaining to this decision should be directed to the undersigned at (571) 272-3230.

Shirene Willis Brantley

Shirene Willis Brantley
Senior Petitions Attorney
Office of Petitions

Enclosure: corrected filing receipt

UNITED STATES PATENT AND TRADEMARK OFFICE

UNITED STATES DEPARTMENT OF COMMERCE
United States Patent and Trademark Office
Address: COMMISSIONER FOR PATENTS
P.O. Box 1450
Alexandria, Virginia 22313-1450
www.uspto.gov

APPLICATION NUMBER	FILING or 371(c) DATE	GRP ART UNIT	FIL FEE REC'D	ATTY.DOCKET.NO	TOT CLAIMS	IND CLAIMS
12/371,141	02/13/2009	2836	1298	1640-59 CON	24	1

CONFIRMATION NO. 7017

CORRECTED FILING RECEIPT

73609
Leviton Manufacturing Company Incorporated (CDFS)
c/o Carter, DeLuca, Farrell & Schmidt, LLP
445 Broad Hollow Rd. Ste. 420
Melville, NY 11747

OC000000042152657

Date Mailed: 06/18/2010

Receipt is acknowledged of this non-provisional patent application. The application will be taken up for examination in due course. Applicant will be notified as to the results of the examination. Any correspondence concerning the application must include the following identification information: the U.S. APPLICATION NUMBER, FILING DATE, NAME OF APPLICANT, and TITLE OF INVENTION. Fees transmitted by check or draft are subject to collection. Please verify the accuracy of the data presented on this receipt. **If an error is noted on this Filing Receipt, please submit a written request for a Filing Receipt Correction. Please provide a copy of this Filing Receipt with the changes noted thereon. If you received a "Notice to File Missing Parts" for this application, please submit any corrections to this Filing Receipt with your reply to the Notice. When the USPTO processes the reply to the Notice, the USPTO will generate another Filing Receipt incorporating the requested corrections**

Applicant(s)

Frantz Germain, Rosedale, NY;
David Herzfeld, Huntington, NY;
John J. Power, Westbury, NY;
Armando Calixto, Floral Park, NY;

Assignment For Published Patent Application

Leviton Manfucturing Co., Inc., Little Neck, NY

Power of Attorney:

Barry Magidoff--21064
Paul Sutton--24201
George MacDonald--39284

Domestic Priority data as claimed by applicant

This application is a CON of 11/405,298 04/17/2006 PAT 7,492,558
and is a CON of 09/812,875 03/20/2001 PAT 7,031,125
and is a CIP of 09/688,481 10/16/2000 PAT 6,437,700

Foreign Applications

If Required, Foreign Filing License Granted: 02/24/2009

The country code and number of your priority application, to be used for filing abroad under the Paris Convention, is **US 12/371,141**

Projected Publication Date: Not Applicable
Non-Publication Request: No
Early Publication Request: No

Title

RESET LOCKOUT FOR SLIDING LATCH GFCI

Preliminary Class

361

PROTECTING YOUR INVENTION OUTSIDE THE UNITED STATES

Since the rights granted by a U.S. patent extend only throughout the territory of the United States and have no effect in a foreign country, an inventor who wishes patent protection in another country must apply for a patent in a specific country or in regional patent offices. Applicants may wish to consider the filing of an international application under the Patent Cooperation Treaty (PCT). An international (PCT) application generally has the same effect as a regular national patent application in each PCT-member country. The PCT process **simplifies** the filing of patent applications on the same invention in member countries, but **does not result** in a grant of "an international patent" and does not eliminate the need of applicants to file additional documents and fees in countries where patent protection is desired.

Almost every country has its own patent law, and a person desiring a patent in a particular country must make an application for patent in that country in accordance with its particular laws. Since the laws of many countries differ in various respects from the patent law of the United States, applicants are advised to seek guidance from specific foreign countries to ensure that patent rights are not lost prematurely.

Applicants also are advised that in the case of inventions made in the United States, the Director of the USPTO must issue a license before applicants can apply for a patent in a foreign country. The filing of a U.S. patent application serves as a request for a foreign filing license. The application's filing receipt contains further information and guidance as to the status of applicant's license for foreign filing.

Applicants may wish to consult the USPTO booklet, "General Information Concerning Patents" (specifically, the section entitled "Treaties and Foreign Patents") for more information on timeframes and deadlines for filing foreign patent applications. The guide is available either by contacting the USPTO Contact Center at 800-786-9199, or it can be viewed on the USPTO website at http://www.uspto.gov/web/offices/pac/doc/general/index.html.

For information on preventing theft of your intellectual property (patents, trademarks and copyrights), you may wish to consult the U.S. Government website, http://www.stopfakes.gov. Part of a Department of Commerce initiative, this website includes self-help "toolkits" giving innovators guidance on how to protect intellectual property in specific countries such as China, Korea and Mexico. For questions regarding patent enforcement issues, applicants may call the U.S. Government hotline at 1-866-999-HALT (1-866-999-4158).

LICENSE FOR FOREIGN FILING UNDER

Title 35, United States Code, Section 184

Title 37, Code of Federal Regulations, 5.11 & 5.15

GRANTED

The applicant has been granted a license under 35 U.S.C. 184, if the phrase "IF REQUIRED, FOREIGN FILING LICENSE GRANTED" followed by a date appears on this form. Such licenses are issued in all applications where the conditions for issuance of a license have been met, regardless of whether or not a license may be required as

set forth in 37 CFR 5.15. The scope and limitations of this license are set forth in 37 CFR 5.15(a) unless an earlier license has been issued under 37 CFR 5.15(b). The license is subject to revocation upon written notification. The date indicated is the effective date of the license, unless an earlier license of similar scope has been granted under 37 CFR 5.13 or 5.14.

This license is to be retained by the licensee and may be used at any time on or after the effective date thereof unless it is revoked. This license is automatically transferred to any related applications(s) filed under 37 CFR 1.53(d). This license is not retroactive.

The grant of a license does not in any way lessen the responsibility of a licensee for the security of the subject matter as imposed by any Government contract or the provisions of existing laws relating to espionage and the national security or the export of technical data. Licensees should apprise themselves of current regulations especially with respect to certain countries, of other agencies, particularly the Office of Defense Trade Controls, Department of State (with respect to Arms, Munitions and Implements of War (22 CFR 121-128)); the Bureau of Industry and Security, Department of Commerce (15 CFR parts 730-774); the Office of Foreign AssetsControl, Department of Treasury (31 CFR Parts 500+) and the Department of Energy.

NOT GRANTED

No license under 35 U.S.C. 184 has been granted at this time, if the phrase "IF REQUIRED, FOREIGN FILING LICENSE GRANTED" DOES NOT appear on this form. Applicant may still petition for a license under 37 CFR 5.12, if a license is desired before the expiration of 6 months from the filing date of the application. If 6 months has lapsed from the filing date of this application and the licensee has not received any indication of a secrecy order under 35 U.S.C. 181, the licensee may foreign file the application pursuant to 37 CFR 5.15(b).

UNITED STATES PATENT AND TRADEMARK OFFICE

Commissioner for Patents
United States Patent and Trademark Office
P.O. Box 1450
Alexandria, VA 22313-1450
www.uspto.gov

MAILED

JUN 08 2010

OFFICE OF PETITIONS

PHILIPS INTELLECTUAL PROPERTY & STANDARDS
P.O. BOX 3001
BRIARCLIFF MANOR NY 10510

In re Application of

James T. Russell

Application No. 12/371,151

Filed: February 13, 2009

Attorney Docket No. **011225US3**

DECISION ON PETITION

This is a decision on the petition under 37 CFR 1.137(b), filed April 1, 2010, to revive the above-identified application.

The petition is **GRANTED**.

The above-cited application became abandoned on December 24, 2009, for failure to reply in a timely manner to the non-final Office action, mailed September 23, 2009 which set a shortened statutory period for reply of three (3) months from its mailing date. A Notice of Abandonment was mailed on March 26, 2010.

The amendment filed April 1, 2010, is noted.

The application is being forwarded to Technology Center 2800, GAU 2884 for further processing.

Telephone inquiries concerning this decision should be directed to the undersigned at (571) 272-3222.

Kenya A. McLaughlin
Petitions Attorney
Office of Petitions

UNITED STATES PATENT AND TRADEMARK OFFICE

UNITED STATES DEPARTMENT OF COMMERCE
United States Patent and Trademark Office
Address: COMMISSIONER FOR PATENTS
P.O. Box 1450
Alexandria, Virginia 22313-1450
www.uspto.gov

APPLICATION NO.	FILING DATE	FIRST NAMED INVENTOR	ATTORNEY DOCKET NO.	CONFIRMATION NO.
12/371,159	02/13/2009	Nicholas J. Papadopoulos	6040 C	7057

26693 7590 03/25/2009
REGENERON PHARMACEUTICALS, INC
777 OLD SAW MILL RIVER ROAD
TARRYTOWN, NY 10591

EXAMINER
NATARAJAN, MEERA

ART UNIT	PAPER NUMBER
1643	

MAIL DATE	DELIVERY MODE
03/25/2009	PAPER

Please find below and/or attached an Office communication concerning this application or proceeding.

The time period for reply, if any, is set in the attached communication.

UNITED STATES PATENT AND TRADEMARK OFFICE

Commissioner for Patents
United States Patent and Trademark Office
P.O. Box 1450
Alexandria, VA 22313-1450
www.uspto.gov

MAR 2 5 2009

26693
REGENERON PHARMACEUTICALS, INC
777 Old Saw Mill River Road
Tarrytown, NY 10591

In re Application of	:
Papadopoulos et al.	: DECISION ON PETITION TO MAKE
Serial No.: 12/371,159	: SPECIAL FOR NEW APPLICATION
Filed: February 13, 2009	: UNDER 37 C.F.R. § 1.102 & M.P.E.P.
Attorney Docket No.: 6040 C	: § 708.02

This is a decision on the petition filed on February 13, 2009, to make the above-identified application special for accelerated examination procedure under 37 C.F.R. § 1.102(d).

The petition to make the application special is **GRANTED**.

The application is eligible for accelerated examination and the petition complies with the conditions for granting the application special status pursuant to the "Change to Practice for Petitions in Patent Applications to Make Special and for Accelerated Examination" published June 26, 2006, in the Federal Register. (71 Fed. Reg. 36323).

The prosecution of the instant application will be conducted expeditiously according to the following guidelines.

1. The application will be docketed to an examiner and taken up for action within two weeks of the date of this decision.

2. Restriction Practice:
   If the examiner determines that the claims are not directed to a single invention, a telephone request to elect one single invention will be made pursuant to MPEP 812.01. As a prerequisite to the grant of this petition, the applicant has agreed to make an oral election, by telephone, without traverse. If the applicant refuses to make an election without traverse, or the examiner cannot reach the applicant after a reasonable effort, the examiner will treat the first claimed invention (invention defined by claim 1) as having being constructively elected without traverse for examination.

3. Office action:
   If it is determined that, after appropriate consultation, there is a potential rejection or any other issue to be addressed, the examiner will telephone the applicant and arrange an interview to discuss and resolve the issue. An Office action, other than a Notice of Allowance and Fee(s) Due (Notice of Allowance), will not be issued unless either: 1) an interview was conducted but did not result in an agreement that places the application in condition for allowance, or, 2) a determination is made that an interview would be unlikely to result in the application being placed in condition for allowance, and 3) an internal conference has been held to review any rejection of any claim.

4. Time for Reply:
   An Office action other than a Notice of Allowance or a Final Office action will set a shortened statutory period of one month or thirty days, whichever is longer, for reply with no extension of time available under 37 CFR 1.136(a). Failure to timely file a reply within this non-extendible period for reply will result in the abandonment of the application.

5. Reply by Applicant:
   A timely reply to an Office action other than the Notice of Allowance must be submitted electronically via EFS or EFS-web and limited to addressing the rejections, objections and requirement made. Any amendment that attempts to: 1) add claims which would result in more than three pending independent claims or more than twenty pending total claims; 2) present claims not encompassed by the pre-examination search or an updated accelerated examination support document; or 3) present claims that are directed a non-elected invention or an invention other than that previously claimed and examined in the application, will be treated as not fully responsive and will not be entered.

   For any amendment to the claims (including any new claim) that is not encompassed by the accelerated examination support document, applicant must provide an updated accelerated examination support document that encompasses the amended or new claims at the time of filing of the amendment.

   To proceed expeditiously with the examination, it is recommended that a reply with amendments made to any claim or with any new claim being added be accompanied by an updated accelerated examination support document or a statement explaining how the amended or new claim is supported by the original accelerated examination support document.

6. Information Disclosure Statement (IDS):
   Any IDS filed during prosecution must be submitted electronically via EFS or EFS-web, accompanied by an updated accelerated examination support document, and be in compliance with 37 CFR 1.97 and 1.98.

7. Post-Allowance Processing:
   To expedite processing of the allowed application into a patent, the applicant must: 1) pay the required fees within one month of the date of the Notice of Allowance, and 2) not file any post allowance papers not required by the Office. In no event may the issue fee be paid and accepted later than three months from the date of the Notice of Allowance.

8. After-Final and Appeal Procedures:
   To expedite prosecution, after receiving the Final Office action, applicant must: 1) promptly file a Notice of Appeal, an Appeal Brief and Appeal fees; and 2) not request a pre-appeal brief conference.

   Any amendment, affidavit or other evidence filed after Final Office action must comply with applicable rules and the requirements outlined in numbered paragraphs 5 and 6 above.

   On appeal, the application will proceed according to normal appeal procedures. After appeal, the application will again be treated special.

9. Proceedings Outside the Normal Examination Process:
   If the application becomes involved in a proceeding that is outside the normal examination process (e.g., a secrecy order, national security review, interference proceeding, petitions under 37 CFR 1.181, 182 or 183), the application will be treated special before and after such proceeding.

10. Final Disposition:
    The twelve month goal of this accelerated examination procedure ends with a final disposition. The mailing of a Final Office action, a Notice of Allowance, the filing of a Notice of Appeal, or the filing of a Request for Continued Examination (RCE) is the final disposition.

If, during prosecution, a paper is not filed electronically using EFS-web, a reply is filed but is not fully responsive, the application is involved in an appeal, or a proceeding outside normal examination process, the application will still be examined expeditiously, however, the final disposition may occur more than twelve months from the filing of the application.

Any inquiry regarding this decision should be directed to Dave Nguyen, QAS TC1600 at (571) 272-0731

Dave Nguyen
QAS TC1600

UNITED STATES PATENT AND TRADEMARK OFFICE

COMMISSIONER FOR PATENTS
UNITED STATES PATENT AND TRADEMARK OFFICE
P.O. BOX 1450
ALEXANDRIA, VA 22313-1450
www.uspto.gov

COPY MAILED

JUL 2 0 2009

OFFICE OF PETITIONS

HAYNES BEFFEL & WOLFELD LLP
P O BOX 366
HALF MOON BAY CA 94019

In re Application of
Lipinski, et al.
Application No. 12/371,227
Deposited: February 13, 2009
Attorney Docket No. UGCO 1003-3

ON PETITION

This is in response to the "PETITION UNDER 37 CFR 1.57(b) OR ALTERNATIVELY UNDER 37 CFR 1.57(a) TO OBTAIN FILING DATE OF FEBRUARY 13, 2009" filed March 23, 2009, requesting that the above-referenced application be accorded a filing date of February 13, 2009. This petition is being treated pursuant to 37 CFR 1.53(e)(2)[1].

Application papers in the above-identified application were deposited on February 13, 2009. However, on February 27, 2009, the Office of Patent Application Processing mailed applicants a "Notice of Incomplete Nonprovisional Application," notifying applicants that the application papers had not been accorded a filing date because the application was deposited without drawings. In response, applicants timely filed this petition. Applicants request that the application be amended to include the inadvertently omitted drawings on the basis that the drawings were expressly incorporated by reference.

Petitioner's arguments and evidence have been considered. However, a review of the application confirms that, as filed, the application contained at least one method claim. MPEP 601.01(f) provides that:

> It has been USPTO practice to treat an application that contains at least one process or method claim as an application for which a drawing is not necessary for an understanding of the invention under 35 U.S.C. 113 (first sentence).

Thus, pursuant to § 601.01(f), a drawing is not considered essential for a filing date. The instant application is entitled to a filing date without drawings present in the application.

Accordingly, the Office should have granted the application a filing date and mailed a Notice of Omitted Items instead of a Notice of Incomplete Nonprovisional Application. As stated in MPEP 601.01(g) under the section entitled, "Application Entitled to a Filing Date," applicant

[1] Any request for review of a notification pursuant to paragraph (e)(1) of this section, or a notification that the original application papers lack a portion of the specification or drawing(s), must be by way of a petition pursuant to this paragraph accompanied by the fee set forth in § 1.17(f). In the absence of a timely (§ 1.181(f)) petition pursuant to this paragraph, the filing date of an application in which the applicant was notified of a filing error pursuant to paragraph (e)(1) of this section will be the date the filing error is corrected.

may submit an amendment to include the inadvertently omitted portion of the drawing(s) pursuant to 37 CFR 1.57(a):

> [i]f an application was filed on or after September 21, 2004, and contains a claim under 37 CFR 1.55 for priority of a prior-filed foreign application, or a claim under 37 CFR 1.78 for the benefit of a prior-filed provisional, nonprovisional, or international application that was present on the filing date of the application, and the omitted portion of the drawing(s) was inadvertently omitted from the application and is completely contained in the prior-filed application[.]

Please note that no petition is required and that the amendment must comply with 37 CFR 1.57(a) and 37 CFR 1.121. See MPEP § 201.17. Any amendment to include the inadvertently omitted drawing(s) will be considered by the examiner.

To the extent the instant petition requests a filing date of February13, 2009 with no drawings present in the application, the petition is **GRANTED**.

Given the basis for granting this petition, the petition fee is being refunded.

Pursuant to this decision, the application will be referred to Office of Patent Application Processing for:

- **correction of the filing date to February 13, 2009**;
- **for indication in Office records, as appropriate, that "0" sheets of drawings were present on filing** and
- **for issuance of a filing receipt.**

Entry of the amendment filed March 23, 2009 will be determined by the examiner.

Telephone inquiries concerning this matter may be directed to Petitions Attorney Alesia M. Brown at (571) 272-3205.

Anthony Knight
Supervisor
Office of Petitions

UNITED STATES PATENT AND TRADEMARK OFFICE

UNITED STATES DEPARTMENT OF COMMERCE
United States Patent and Trademark Office
Address: COMMISSIONER FOR PATENTS
P.O. Box 1450
Alexandria, Virginia 22313-1450
www.uspto.gov

APPLICATION NO.	FILING DATE	FIRST NAMED INVENTOR	ATTORNEY DOCKET NO.	CONFIRMATION NO.
12/371,251	02/13/2009	Reza J. SHEIKHREZAI	090308-0376984	7257

27498 7590 02/25/2010
PILLSBURY WINTHROP SHAW PITTMAN LLP
P.O. BOX 10500
MCLEAN, VA 22102

EXAMINER
GONZALEZ, JULIO C

ART UNIT	PAPER NUMBER
2839	

NOTIFICATION DATE	DELIVERY MODE
02/25/2010	ELECTRONIC

Please find below and/or attached an Office communication concerning this application or proceeding.

The time period for reply, if any, is set in the attached communication.

Notice of the Office communication was sent electronically on above-indicated "Notification Date" to the following e-mail address(es):

docket_ip@pillsburylaw.com

UNITED STATES PATENT AND TRADEMARK OFFICE

Commissioner for Patents
United States Patent and Trademark Office
P.O. Box 1450
Alexandria, VA 22313-1450
www.uspto.gov

PILLSBURY WINTHROP SHAW PITTMAN LLP
P.O. BOX 10500
MCLEAN VA 22102

In re Application of	:	
Reza J. SHEIKHREZAI	:	DECISION ON PETITION
Application No. 12/371,251	:	TO MAKE SPECIAL UNDER
Filed: 13 February 2009	:	THE GREEN TECHNOLOGY
Attorney Docket No. 090308-0376984	:	PILOT PROGRAM

This is a decision on the petition under 37 CFR 1.102, filed 10 February 2010, to make the above-identified application special under the pilot program for applications pertaining to Green Technologies as set forth 74 Federal Register Notice 64666 (December 8, 2009).

The petition is **GRANTED**.

A grantable petition to make an application special under 37 CFR 1.102 and the pilot program as set forth in 74 FR 64666 must be directed to a nonprovisional application filed under 35 USC 111(a) or be a national stage entry under 35 USC 371, exclusive of any reissue applications and be filed prior to the date of the notice, December 8, 2009.

In order to qualify for special status, the following requirements must be met. 1) The application must be classified in one of the eligible US classifications listed in section VI of the notice. 2) The application must have no more than 3 independent claims and no more than 20 total claims. 3) The application must not contain any multiple dependent claims. 4) The petition must state the basis for seeking special status, i.e., the claimed invention either: A) materially enhances the quality of the environment or B) materially contributes to: i) the discovery or development of renewable energy resources, ii) the more efficient utilization and conservation of energy resources, or iii) greenhouse gas emission reduction. 5) If the disclosure is not clear on its face that the claimed invention materially contributes under category (A) or (B), the petition must be accompanied by a statement by the applicant, assignee, or an attorney/agent registered to practice before the Office explaining how the materiality standard is met. 6) A statement that applicant will agree to make an election without traverse in a telephonic interview if a restriction requirement is made by the examiner. 7) The petition to make special must be filed electronically. 8) The petition must be filed at least one day prior to the date that a first Office Action appears in the Patent Application Information Retrieval (PAIR) system. 9) The petition must be accompanied by a request for early publication in compliance with 37 CFR 1.219 and include the publication fee as set forth in 37 CFR 1.18(d).

The requirement for a fee for consideration of the petition to make special for applications pertaining to Green Technologies has been waived.

The instant petition complies with items 1 – 9 above. Accordingly, the above-identified application has been accorded "special" status.

Telephone inquires concerning this decision should be directed to Lee W. Young at 571-272-4549.

The application is being forwarded to the Technology Center Art Unit 2839 for action on the merits commensurate with this decision.

Lee W. Young
Quality Assurance Specialist
Technology Center 2800

UNITED STATES PATENT AND TRADEMARK OFFICE

UNITED STATES DEPARTMENT OF COMMERCE
United States Patent and Trademark Office
Address: COMMISSIONER FOR PATENTS
P.O. Box 1450
Alexandria, Virginia 22313-1450
www.uspto.gov

APPLICATION NO.	FILING DATE	FIRST NAMED INVENTOR	ATTORNEY DOCKET NO.	CONFIRMATION NO.
12/371,315	02/13/2009	John Peurach	PWRL 1051-2	7382

74329 7590 02/12/2010
SunPower Corporation c/o
Haynes Beffel & Wolfeld LLP
P.O. Box 366
Half Moon Bay, CA 94019

EXAMINER
RIDLEY, BASIA ANNA

ART UNIT	PAPER NUMBER
1795	

MAIL DATE	DELIVERY MODE
02/12/2010	PAPER

Please find below and/or attached an Office communication concerning this application or proceeding.

The time period for reply, if any, is set in the attached communication.

UNITED STATES PATENT AND TRADEMARK OFFICE

Commissioner for Patents
United States Patent and Trademark Office
P.O. Box 1450
Alexandria, VA 22313-1450
www.uspto.gov

SunPower Corporation c/o
Haynes Beffel & Wolfeld LLP
P.O. Box 366
Half Moon Bay CA 94019

FEB 1 2 2010

In re Application of	:	
Peurach et al.	:	DECISION ON PETITION
Application No. 12/371,315	:	TO MAKE SPECIAL UNDER
Filed: 2/13/2009	:	THE GREEN TECHNOLOGY
Attorney Docket No. **PWRL 1051-2**	:	PILOT PROGRAM

This is a decision on the petition under 37 CFR 1.102, filed 2/5/2010, to make the above-identified application special under the pilot program for applications pertaining to Green Technologies as set forth 74 Federal Register Notice 64666 (December 8, 2009).

The petition is **GRANTED**.

A grantable petition to make an application special under 37 CFR 1.102 and the pilot program as set forth in 74 FR 64666 must be directed to a nonprovisional application filed under 35 USC 111(a) or be a national stage entry under 35 USC 371, exclusive of any reissue applications and be filed prior to the date of the notice, December 8, 2009.

In order to qualify for special status, the following requirements must be met. 1) The application must be classified in one of the eligible US classifications listed in section VI of the notice. 2) The application must have no more than 3 independent claims and no more than 20 total claims. 3) The application must not contain any multiple dependent claims. 4) The petition must state the basis for seeking special status, i.e., the claimed invention either: A) materially enhances the quality of the environment or B) materially contributes to: i) the discovery or development of renewable energy resources, ii) the more efficient utilization and conservation of energy resources, or iii) greenhouse gas emission reduction. 5) If the disclosure is not clear on its face that the claimed invention materially contributes under category (A) or (B), the petition must be accompanied by a statement by the applicant, assignee, or an attorney/agent registered to practice before the Office explaining how the materiality standard is met. 6) A statement that applicant will agree to make an election without traverse in a telephonic interview if a restriction requirement is made by the examiner. 7) The petition to make special must be filed electronically. 8) The petition must be filed at least one day prior to the date that a first Office Action appears in the Patent Application Information Retrieval (PAIR) system. 9) The petition

must be accompanied by a request for early publication in compliance with 37 CFR 1.219 and include the publication fee as set forth in 37 CFR 1.18(d).

The requirement for a fee for consideration of the petition to make special for applications pertaining to Green Technologies has been waived.

The instant petition complies with items 1 – 9 above. Accordingly, the above-identified application has been accorded "special" status.

Telephone inquires concerning this decision should be directed to Tom Dunn at 571-272-1171.

The application is being forwarded to the Technology Center Art Unit 1795 for action on the merits commensurate with this decision.

/Tom Dunn/

Tom Dunn
Quality Assurance Specialist
Technology Center 1700

UNITED STATES PATENT AND TRADEMARK OFFICE

Commissioner for Patents
United States Patent and Trademark Office
P.O. Box 1450
Alexandria, VA 22313-1450
www.uspto.gov

COPY MAILED

NOV 20 2009

OFFICE OF PETITIONS

CHRISTIE PARKER & HALE, LLP
PO BOX 7068
PASADENA, CA 91109-7068

In re Application of	:	
Sangram K. Gaikwad et al	:	DECISION GRANTING STATUS
Application No. 12/371,372	:	UNDER 37 CFR 1.47(a)
Filed: February 13, 2009	:	
Attorney Docket No. 63425/V283	:	

This is in response to the petition filed May 21, 2009, under 37 CFR 1.47(a).

The petition is **GRANTED.**

Petitioner has shown that the non-signing inventor Gershon Shamay has refused to join in the filing of the above-identified application.

The application and papers have been reviewed and found in compliance with 37 CFR 1.47(a). This application is hereby accorded Rule 1.47(a) status.

As provided in 37 CFR 1.47(c), this Office will forward notice of this application's filing to the non-signing inventor at the address given in the petition. Notice of the filing of this application will also be published in the Official Gazette.

This matter is being referred to the Office of Patent Application Processing.

Telephone inquiries regarding this decision should be directed to Irvin Dingle at (571) 272-3210.

David Bucci
Petitions Examiner
Office of Petitions

UNITED STATES PATENT AND TRADEMARK OFFICE

Commissioner for Patents
United States Patent and Trademark Office
P.O. Box 1450
Alexandria, VA 22313-1450
www.uspto.gov

COPY MAILED

NOV 20 2009

OFFICE OF PETITIONS

Gershon Shamay
2031 Main St.
Irvine, CA 92614

In re Application of
Sangram K. Gaikwad; David A. Sigler; Kendall N. Correll; Gershon Shamay; Lawrence Vazhapully Jacob
Application No. 12/371,372
Filed: February 13, 2009
For: WEB-BASED SYSTEM AND METHOD FOR CONFIGURING TEST EQUIPMENT

Dear Mr. Shamay:

You are named as a joint inventor in the above identified United States patent application, filed under the provisions of 35 U.S.C. 116 (United States Code), and 37 CFR 1.47(a), Rules of Practice in Patent Cases. Should a patent be granted on the application you will be designated therein as a joint inventor.

As a named inventor you are entitled to inspect any paper in the file wrapper of the application, order copies of all or any part thereof (at a prepaid cost per 37 CFR 1.19) or make your position of record in the application. Alternatively, you may arrange to do any of the preceding through a registered patent attorney or agent presenting written authorization from you. If you care to join in the application, counsel of record (see below) would presumably assist you. Joining in the application would entail the filing of an appropriate oath or declaration by you pursuant to 37 CFR 1.63.

Telephone inquiries regarding this communication should be directed to the Irvin Dingle at (571) 272-3210. Requests for information regarding your application should be directed to the File Information Unit at (703) 308-2733. Information regarding how to pay for and order a copy of the application, or a specific paper in the application, should be directed to Certification Division at (571) 272-3150 or 1 (800) 972-6382 (outside the Washington D.C. area).

David Bucci
Petitions Examiner
Office of Petitions

cc: Christie, Parker & Hale, LLP
PO Box 7068
Pasadena, CA 91109-7068

UNITED STATES PATENT AND TRADEMARK OFFICE

Commissioner for Patents
United States Patent and Trademark Office
P.O. Box 1450
Alexandria, VA 22313-1450
www.uspto.gov

LUTHER DONALD MCPEAK
70 MOUNTAIN CREEK TRAIL
SOCIAL CIRCLE, GA 30025

MAILED

OCT 2 1 2009

OFFICE OF PETITIONS

In re Application of	:	
Luther Donald McPeak	:	
Application No. 12/371,408	:	DECISION ON PETITION
Filed: February 13, 2009	:	TO MAKE SPECIAL UNDER
Attorney Docket No. 36860-RA1	:	37 CFR 1.102(c)(1)
	:	

This is a decision on the petition under 37 CFR 1.102(c)(1), filed July 7, 2009, to make the above-identified application special based on applicant's age as set forth in M.P.E.P. § 708.02, Section IV.

The petition is **GRANTED**.

A grantable petition to make an application special under 37 CFR 1.102(c)(1) and MPEP § 708.02, Section IV: Applicant's Age must be accompanied by evidence showing that at least one of the applicants is 65 years of age, or more, such as a birth certificate or a statement by applicant. No fee is required

The instant petition includes a statement signed by applicant. Accordingly, the above-identified application has been accorded "special" status.

Telephone inquiries concerning this decision should be directed to undersigned at 571-272-1642.

All other inquiries concerning either the examination or status of the application should be directed to the Technology Center.

The application is being forwarded to the Technology Center Art Unit 2856 for action on the merits commensurate with this decision.

/AMW/
April M. Wise
Petitions Examiner
Office of Petitions

UNITED STATES PATENT AND TRADEMARK OFFICE

UNITED STATES DEPARTMENT OF COMMERCE
United States Patent and Trademark Office
Address: COMMISSIONER FOR PATENTS
P.O. Box 1450
Alexandria, Virginia 22313-1450
www.uspto.gov

APPLICATION NUMBER	FILING OR 371(C) DATE	FIRST NAMED APPLICANT	ATTY. DOCKET NO./TITLE
12/371,408	02/13/2009	LUTHER DONALD MCPEAK	

CONFIRMATION NO. 7560

POA ACCEPTANCE LETTER

LUTHER DONALD MCPEAK
70 MOUNTAIN CREEK TRAIL
SOCIAL CIRCLE, GA 30025

OC000000038385060

Date Mailed: 10/21/2009

NOTICE OF ACCEPTANCE OF POWER OF ATTORNEY

This is in response to the Power of Attorney filed 07/07/2009.

The Power of Attorney in this application is accepted. Correspondence in this application will be mailed to the above address as provided by 37 CFR 1.33.

/amwise/

Office of Data Management, Application Assistance Unit (571) 272-4000, or (571) 272-4200, or 1-888-786-0101

UNITED STATES PATENT AND TRADEMARK OFFICE

UNITED STATES DEPARTMENT OF COMMERCE
United States Patent and Trademark Office
Address: COMMISSIONER FOR PATENTS
P.O. Box 1450
Alexandria, Virginia 22313-1450
www.uspto.gov

APPLICATION NO.	FILING DATE	FIRST NAMED INVENTOR	ATTORNEY DOCKET NO.	CONFIRMATION NO.
12/371,417	02/13/2009	Younggu Do	1630-0709PUS1	7575

2292 7590 07/21/2010
BIRCH STEWART KOLASCH & BIRCH
PO BOX 747
FALLS CHURCH, VA 22040-0747

EXAMINER
RIDLEY, BASIA ANNA

ART UNIT	PAPER NUMBER
1795	

NOTIFICATION DATE	DELIVERY MODE
07/21/2010	ELECTRONIC

Please find below and/or attached an Office communication concerning this application or proceeding.

The time period for reply, if any, is set in the attached communication.

Notice of the Office communication was sent electronically on above-indicated "Notification Date" to the following e-mail address(es):

mailroom@bskb.com

UNITED STATES PATENT AND TRADEMARK OFFICE

Commissioner for Patents
United States Patent and Trademark Office
P.O. Box 1450
Alexandria, VA 22313-1450
www.uspto.gov

BIRCH STEWART KOLASCH & BIRCH
PO BOX 747
FALLS CHURCH VA 22040-0747

JUL 21 2010

In re Application of	:	
Do et al.	:	DECISION ON PETITION
Application No. 12/371,417	:	TO MAKE SPECIAL UNDER
Filed: 2/13/2009	:	THE GREEN TECHNOLOGY
Attorney Docket No. **1630-0709PUS1**	:	PILOT PROGRAM

This is a decision on the petition under 37 CFR 1.102, filed 7/12/2010, to make the above-identified application special under the pilot program for applications pertaining to Green Technologies as set forth 74 Federal Register Notice 64666 (December 8, 2009).

The petition is **GRANTED**.

A grantable petition to make an application special under 37 CFR 1.102 and the pilot program as set forth in 74 FR 64666 must be directed to a nonprovisional application filed under 35 USC 111(a) or be a national stage entry under 35 USC 371, exclusive of any reissue applications and be filed prior to the date of the notice, December 8, 2009.

In order to qualify for special status, the following requirements must be met. 1) The application must have no more than 3 independent claims and no more than 20 total claims. 2) The application must not contain any multiple dependent claims. 3) The petition must state the basis for seeking special status, i.e., the claimed invention either: A) materially enhances the quality of the environment or B) materially contributes to: i) the discovery or development of renewable energy resources, ii) the more efficient utilization and conservation of energy resources, or iii) greenhouse gas emission reduction. 4) If the disclosure is not clear on its face that the claimed invention materially contributes under category (A) or (B), the petition must be accompanied by a statement by the applicant, assignee, or an attorney/agent registered to practice before the Office explaining how the materiality standard is met. 5) A statement that applicant will agree to make an election without traverse in a telephonic interview if a restriction requirement is made by the examiner. 6) The petition to make special must be filed electronically. 7) The petition must be filed at least one day prior to the date that a first Office Action appears in the Patent Application Information Retrieval (PAIR) system. 8) The petition must be accompanied by a request for early publication in compliance with 37 CFR 1.219 and include the publication fee as set forth in 37 CFR 1.18(d).

The requirement for a fee for consideration of the petition to make special for applications pertaining to Green Technologies has been waived.

The instant petition complies with items 1 – 8 above. Accordingly, the above-identified application has been accorded "special" status.

Telephone inquires concerning this decision should be directed to Tom Dunn at 571-272-1171.

The application is being forwarded to the Technology Center Art Unit 1795 for action on the merits commensurate with this decision.

/Tom Dunn/

Tom Dunn
Quality Assurance Specialist
Technology Center 1700

UNITED STATES PATENT AND TRADEMARK OFFICE

Commissioner for Patents
United States Patent and Trademark Office
P.O. Box 1450
Alexandria, VA 22313-1450
www.uspto.gov

TODD S. PARKHURST
HUGHES SOCOL PIERS RESNICK & DYM LTD.
THREE FIRST NATIONAL PLAZA
70 WEST MADISON- SUITE 4000
CHICAGO, IL 60602

COPY MAILED

APR 30 2009

OFFICE OF PETITIONS

In re Application of	:	
Vincent E. Bryan, et al.	:	
Application No. 12/371,446	:	DECISION ON PETITION
Filed: February 13, 2009	:	TO MAKE SPECIAL UNDER
Attorney Docket No. 20063.200571	:	37 CFR 1.102(c)(1)
	:	

This is a decision on the petition under 37 CFR 1.102(c)(1), filed April 2, 2009, to make the above-identified application special based on applicant's age as set forth in M.P.E.P. § 708.02, Section IV.

The petition is **GRANTED**.

A grantable petition to make an application special under 37 CFR 1.102(c)(1) and MPEP § 708.02, Section IV: Applicant's Age must be accompanied by evidence showing that at least one of the applicants is 65 years of age, or more, such as a birth certificate or a statement by applicant. No fee is required

The instant petition includes a declaration statement signed by applicant Vincent E. Bryan, Jr. Accordingly, the above-identified application has been accorded "special" status.

Telephone inquiries concerning this decision should be directed to undersigned at 571-272-1642. All other inquiries concerning either the examination or status of the application should be directed to the Technology Center.

The application is being referred to the Office of Patent Application Papers for further process of the reply to the Notice to File Missing Parts of Non-Provisional Application(Notice) received April 2, 2009. This application will be accorded "special" status once pre-examination processing is complete.

/AMW/
April M. Wise
Petitions Examiner
Office of Petitions

UNITED STATES PATENT AND TRADEMARK OFFICE

UNITED STATES DEPARTMENT OF COMMERCE
United States Patent and Trademark Office
Address: COMMISSIONER FOR PATENTS
P.O. Box 1450
Alexandria, Virginia 22313-1450
www.uspto.gov

DAVIS WRIGHT TREMAINE LLP - SANDISK CORPORATION
505 MONTGOMERY STREET
SUITE 800
SAN FRANCISCO, CA 94111

Mail Date: 04/21/2010

Applicant	: Kevin M. Conley	: DECISION ON REQUEST FOR
Patent Number	: 7657702	: RECALCULATION of PATENT
Issue Date	: 02/02/2010	: TERM ADJUSTMENT IN VIEW
Appliction No	: 12/371,460	: OF WYETH AND NOTICE OF INTENT TO
Filed	: 02/13/2009	: ISSUE CERTIFICATE OF CORRECTION
		:

The Request for Recalculation is **GRANTED** to the extent indicated.

The patent term adjustment has been determined to be **0** days. The USPTO will *sua sponte* issue a certificate of correction reflecting the amount of PTA days determined by the recalculation.

Prior to the issuance of the certificate of correction, the USPTO will afford patentee an opportunity to be heard and request reconsideration. Accordingly, patentee has **one month or thirty (30) days**, whichever is longer, to file a request for reconsideration of this patent term adjustment calculation. See 35 U.S.C. 154(b)(3)(B)(ii) and 37 CFR 1.322(a)(4). No extensions of time will be granted under 37 CFR 1.136.

Patentee should use document code PET.OP if electronically filing a request for reconsideration of this patent term adjustment calculation. The patentee must also include the information required by 37 CFR 1.705(b)(2) and the fee required by 37 CFR 1.18(e). If patentee does not file a timely request for reconsideration of this patent term adjustment calculation including the information required by 37 CFR 1.705(b)(2) and the fee required by 37 CFR 1.18(e), the USPTO will issue a certificate of correction reflecting the PTA determination noted above.

Patentee should be aware that in order to preserve the right to review in the United States District Court for the District of Columbia of the USPTO patent term adjustment determination, patentee must ensure that he or she also take the steps required under 35 U.S.C. 154(b)(4)(A) in a timely manner. Nothing in the request for recalculation should be construed as providing an alternative time frame for commencing a civil action under 35 U.S.C. 154(b)(4)(A).

Any questions concerning this decision should be directed to the Office of Patent Legal Administration at 571-272-7702.

UNITED STATES PATENT AND TRADEMARK OFFICE

UNITED STATES DEPARTMENT OF COMMERCE
United States Patent and Trademark Office
Address: COMMISSIONER FOR PATENTS
P.O. Box 1450
Alexandria, Virginia 22313-1450
www.uspto.gov

APPLICATION NO.	FILING DATE	FIRST NAMED INVENTOR	ATTORNEY DOCKET NO.	CONFIRMATION NO.
12/371,525	02/13/2009	Yuji Matsuzawa	10525.0014-01000	7787

22852 7590 07/07/2009
FINNEGAN, HENDERSON, FARABOW, GARRETT & DUNNER LLP
901 NEW YORK AVENUE, NW
WASHINGTON, DC 20001-4413

EXAMINER

ART UNIT	PAPER NUMBER
1656	

MAIL DATE	DELIVERY MODE
07/07/2009	PAPER

Please find below and/or attached an Office communication concerning this application or proceeding.

The time period for reply, if any, is set in the attached communication.

UNITED STATES PATENT AND TRADEMARK OFFICE

Commissioner for Patents
United States Patent and Trademark Office
P.O. Box 1450
Alexandria, VA 22313-1450
www.uspto.gov

JUL 0 7 2009

FINNEGAN, HENDERSON, FARABOW, GARRETT & DUNNER
LLP
901 NEW YORK AVENUE, NW
WASHINGTON DC 20001-4413

In re Application of	:	
Yuji Matsuzawa	:	DECISION ON REQUEST TO
Application No. 12/371,525	:	PARTICIPATE IN PATENT
Filed: February 13, 2009	:	PROSECUTION HIGHWAY
Attorney Docket No. 10525.0014-01000	:	PROGRAM AND PETITION
	:	TO MAKE SPECIAL UNDER
	:	37 CFR 1.102(d)

This is a decision on the request to participate in the Patent Prosecution Highway (PPH) program and the petition under 37 CFR 1.102(d), filed February 13, 2009, to make the above-identified application special.

The request and petition are **GRANTED**.

A grantable request to participate in the PPH program and petition to make special require:

(1) The U.S. application must validly claim priority under 35 U.S.C. 119(a) to one or more applications filed in the JPO;
(2) Applicant must submit a copy of the allowable/patentable claim(s) from the JPO application(s) along with an English translation thereof and a statement that the English translation is accurate;
(3) All the claims in the U.S. application must sufficiently correspond or be amended to sufficiently correspond to the allowable/patentable claim(s) in the JPO application(s);
(4) Examination of the U.S. application has not begun;
(5) Applicant must submit a copy of all the office actions from each of the JPO application(s) containing the allowable/patentable claim(s) along with an English translation thereof and a statement that the English translation is accurate;
(6) Applicant must submit an IDS listing the documents cited by the JPO examiner in the JPO office action along with copies of documents except U.S. patents or U.S. patent application publications; and
(7) The required petition fee under 37 CFR 1.17(h).

The request to participate in the PPH program and petition comply with the above requirements. Accordingly, the above-identified application has been accorded "special" status.

Telephone inquiries concerning this decision should be directed to Ram R. Shukla at 571-272-0735.

All other inquiries concerning the examination or status of the application should be directed to Patent Application Information Retrieval (PAIR) system at the http://www.uspto.gov/ebc/index.html.

The application is being forwarded to the examiner for action on the merits commensurate with this decision.

Ram R. Shukla, Ph.D.
Supervisory Patent Examiner
TC 1600

RAM R. SHUKLA, PH.D.
SUPERVISORY PATENT EXAMINER

UNITED STATES PATENT AND TRADEMARK OFFICE

Commissioner for Patents
United States Patent and Trademark Office
P.O. Box 1450
Alexandria, VA 22313-1450
www.uspto.gov

JACKSON & CO., LLP
6114 LA SALLE AVENUE
#507
OAKLAND CA 94611-2802

MAILED

MAY 10 2010

OFFICE OF PETITIONS

In re Application of :
Say et al. :
Application No. 12/371,539 : ON PETITION
Filing: February 13, 2009 :
Attorney Docket No. TS-02-26C43 :

This is a decision on the petition under 37 CFR 1.102(c)(1), filed March 17, 2010, to make the above-identified application special based on applicant's age as set forth in M.P.E.P. § 708.02, Section IV.

The petition is **GRANTED**.

A grantable petition to make an application special under 37 CFR 1.102(c)(1) and MPEP § 708.02, Section IV: Applicant's Age must be accompanied by evidence showing that at least one of the applicants is 65 years of age, or more, such as a birth certificate or a statement by applicant. No fee is required.

The instant petition includes a statement (PTO/SB/130 form) by the applicant's attorney that the applicant is 65 years of age. Accordingly, the above-identified application has been accorded "special" status.

Telephone inquiries concerning this decision should be directed to the undersigned at 571-272-6059. All other inquiries concerning either the examination or status of the application should be directed to the Technology Center.

A. Kelley

Alicia Kelley
Petitions Examiner
Office of Petitions

UNITED STATES PATENT AND TRADEMARK OFFICE

Commissioner for Patents
United States Patent and Trademark Office
P.O. Box 1450
Alexandria, VA 22313-1450
www.uspto.gov

SYNTHETIC GENOMICS C/O MOFO
12531 HIGH BLUFF DRIVE, SUITE 100
SAN DIEGO, CA 92130

MAILED

MAY 27 2010

OFFICE OF PETITIONS

In re Application of	:	
Daniel G. GIBSON, et *al.*	:	
Application No. 12/371,543	:	DECISION ON PETITION
Filed: February 13, 2009	:	TO MAKE SPECIAL UNDER
Attorney Docket No. **616872001400**	:	37 CFR 1.102(c)(1)
	:	

This is a decision on the petition under 37 CFR 1.102(c)(1), filed April 29, 2010, to make the above-identified application special based on applicant's age as set forth in M.P.E.P. § 708.02, Section IV.

The petition is **GRANTED**.

A grantable petition to make an application special under 37 CFR 1.102(c)(1) and MPEP § 708.02, Section IV: Applicant's Age must be accompanied by evidence showing that at least one of the applicants is 65 years of age, or more, such as a birth certificate or a statement by applicant. No fee is required

The instant petition includes the statement of inventor Hamilton O. Smith, M.D., attesting to his age. Accordingly, the above-identified application has been accorded "special" status.

Telephone inquiries concerning this decision should be directed to the undersigned at 571-272-7253.

All other inquiries concerning either the examination or status of the application should be directed to the Technology Center.

The application is being forwarded to the Technology Center Art Unit 1639 for action on the merits commensurate with this decision.

/Monica A. Graves/
Petitions Examiner, Office of Petitions

PTO/SB/130 (03-08)
Approved for use through 05/31/2008. OMB 0651- 0031
U.S. Patent and Trademark Office; U.S. DEPARTMENT OF COMMERCE
Under the Paperwork Reduction Act of 1995, no persons are required to respond to a collection of information unless it contains a valid OMB control number

PETITION TO MAKE SPECIAL BASED ON AGE FOR ADVANCEMENT OF EXAMINATION UNDER 37 CFR 1.102(c)(1)

Application Information

Application Number	12371611	Confirmation Number	7981	Filing Date	2009-02-15
Attorney Docket Number (optional)	SPF-002BUS	Art Unit	1797	Examiner	
First Named Inventor	Leon Mir				
Title of Invention	METHOD AND APPARATUS FOR THE FILTRATION OF BIOLOGICAL SAMPLES				

Attention: Office of Petitions

An application may be made special for advancement of examination upon filing of a petition showing that the applicant is 65 years of age, or more. No fee is required with such a petition. See 37 CFR 1.102(c)(1) and MPEP 708.02 (IV).

APPLICANT HEREBY PETITIONS TO MAKE SPECIAL FOR ADVANCEMENT OF EXAMINATION IN THIS APPLICATION UNDER 37 CFR 1.102(c)(1) and MPEP 708.02 (IV) ON THE BASIS OF THE APPLICANT'S AGE.

A grantable petition requires one of the following items:
(1) Statement by one named inventor in the application that he/she is 65 years of age, or more; or
(2) Certification by a registered attorney/agent having evidence such as a birth certificate, passport, driver's license, etc. showing one named inventor in the application is 65 years of age, or more.

Name of Inventor who is 65 years of age, or older

Given Name	Middle Name	Family Name	Suffix
Leon		MIR	

A signature of the applicant or representative is required in accordance with 37 CFR 1.33 and 10.18.
Please see 37 CFR 1.4(d) for the format of the signature.

Select (1) or (2) :

○ (1) I am an inventor in this application and I am 65 years of age, or more.

◉ (2) I am an attorney or agent registered to practice before the Patent and Trademark Office, and I certify that I am in possession of evidence, and will retain such in the application file record, showing that the inventor listed above is 65 years of age, or more.

Signature	/Barry Gaiman/	Date (YYYY-MM-DD)	2009-02-15
Name	Barry Gaiman	Registration Number	42562

PTO/SB/130 (03-08)
Approved for use through 05/31/2008. OMB 0651- 0031
U.S. Patent and Trademark Office; U.S. DEPARTMENT OF COMMERCE
Under the Paperwork Reduction Act of 1995, no persons are required to respond to a collection of information unless it contains a valid OMB control number

Privacy Act Statement

The Privacy Act of 1974 (P.L. 93-579) requires that you be given certain information in connection with your submission of the attached form related to a patent application or patent. Accordingly, pursuant to the requirements of the Act, please be advised that: (1) the general authority for the collection of this information is 35 U.S.C. 2(b)(2); (2) furnishing of the information solicited is voluntary; and (3) the principal purpose for which the information is used by the U.S. Patent and Trademark Office is to process and/or examine your submission related to a patent application or patent. If you do not furnish the requested information, the U.S. Patent and Trademark Office may not be able to process and/or examine your submission, which may result in termination of proceedings or abandonment of the application or expiration of the patent.

The information provided by you in this form will be subject to the following routine uses:

1. The information on this form will be treated confidentially to the extent allowed under the Freedom of Information Act (5 U.S.C. 552) and the Privacy Act (5 U.S.C. 552a). Records from this system of records may be disclosed to the Department of Justice to determine whether the Fr eedom of Information Act requires disclosure of these records.

2. A record from this system of records may be disclosed, as a routine use, in the course of presenting evidence to a court, magistrate, or administrative tribunal, including disclosures to opposing counsel in the course of settlement negotiations.

3. A record in this system of records may be disclosed, as a routine use, to a Member of Congress submitting a request involving an individual, to whom the record pertains, when the individual has requested assistance from the Member with respect to the subject matter of the record.

4. A record in this system of records may be disclosed, as a routine use, to a contractor of the Agency having need for the information in order to perform a contract. Recipients of information shall be required to comply with the requirements of the Privacy Act of 1974, as amended, pursuant to 5 U.S.C. 552a(m).

5. A record related to an International Application filed under the Patent Cooperation Treaty in this system of records may be disclosed, as a routine use, to the International Bureau of the World Intellectual Property Organization, pursuant to the Patent Cooperation Treaty.

6. A record in this system of records may be disclosed, as a routine use, to another federal agency for purposes of National Security review (35 U.S.C. 181) and for review pursuant to the Atomic Energy Act (42 U.S.C. 218(c)).

7. A record from this system of records may be disclosed, as a routine use, to the Administrator, General Services, or his/her designee, during an inspection of records conducted by GSA as part of that agency's responsibility to recommend improvements in records management practices and programs, under authority of 44 U.S.C. 2904 and 2906. Such disclosure shall be made in accordance with the GSA regulations governing inspection of records for this purpose, and any other relevant (i.e., GSA or Commerce) directive. Such disclosure shall not be used to make determinations about indivi duals.

8. A record from this system of records may be disclosed, as a routine use, to the public after either publication of the application pursuant to 35 U.S.C. 122(b) or issuance of a patent pursuant to 35 U.S.C. 151. Further, a record may be disclosed, subject to the limitations of 37 CFR 1.14, as a routine use, to the public if the record was filed in an application which became abandoned or in which the proceedings were terminated and which application is referenced by either a published application, an application open to public inspections or an issued patent.

9. A record from this system of records may be disclosed, as a routine use, to a Federal, State, or local law enforcement agency, if the USPTO becomes aware of a violation or potential violation of law or regulation.

UNITED STATES PATENT AND TRADEMARK OFFICE

Commissioner for Patents
United States Patent and Trademark Office
P.O. Box 1450
Alexandria, VA 22313-1450
www.uspto.gov

In re Application of :
Leon Mir :

Application No. 12371611 :DECISION ON PETITION TO MAKE SPECIAL
Filed: :UNDER 37 CFR 1.102(c)(1)
:

Attorney Docket No. SPF-002BUS

This is a decision on the electronic petition under 37 CFR 1.102 (c)(1), filed 15-FEB-2009 to make the above-identified application special based on applicant's age as set forth in MPEP § 708.02, Section IV.

The petition is **GRANTED**.

A grantable petition to make an application special under 37 CFR 1.102(c)(1), MPEP § 708.02, Section IV: Applicant's Age must include a statement by applicant or a registered practitioner having evidence that applicant is at least 65 years of age. No fee is required.

Accordingly, the above-identified application has been accorded "special" status and will be taken up for action by the examiner upon the completion of all pre-examination processing.

Telephone inquiries concerning this electronic decision should be directed to the Electronic Business Center at 866-217-9197.

All other inquiries concerning either the examination or status of the application should be directed to the Technology Center.

UNITED STATES PATENT AND TRADEMARK OFFICE

Commissioner for Patents
United States Patent and Trademark Office
P.O. Box 1450
Alexandria, VA 22313-1450
www.uspto.gov

Downs Rachlin Martin, PLLC
199 Main Street
P.O. Box 190
Burlington, VT 05402-0190

COPY MAILED

APR 2 8 2009

OFFICE OF PETITIONS

In re Application of	:	
Patrick Stine	:	
Application No. 12/371,673	:	DECISION ON
Filed: February 16, 2009	:	PETITION TO WITHDRAW
Attorney Docket No. 12677-00001	:	FROM RECORD
	:	

This is a decision on the petition under 37 CFR 1.102(c)(1), filed April 10, 2009, to make the above-identified application special based on applicant's age as set forth in M.P.E.P. § 708.02, Section IV.

The petition is **GRANTED**.

A grantable petition to make an application special under 37 CFR 1.102(c)(1) and MPEP § 708.02, Section IV: Applicant's Age must be accompanied by evidence showing that at least one of the applicants is 65 years of age, or more, such as a birth certificate or a statement by applicant. No fee is required

The instant petition includes a statement by an attorney that applicant is 65 years of age or older. Accordingly, the above-identified application has been accorded "special" status.

Telephone inquiries concerning this decision should be directed to Kimberly Inabinet at 571-272-4618.

All other inquiries concerning the status of the application should be directed to the Office of Patent Examination Processing at 571-272-4000.

Upon completion of the pre-examination processing by the Office of Patent Application Processing, this application will be referred to Technology Center 1792 for action on the merits commensurate with this decision.

Kimberly Inabinet
Petitions Examiner
Office of Petitions

UNITED STATES PATENT AND TRADEMARK OFFICE

Commissioner for Patents
United States Patent and Trademark Office
P.O. Box 1450
Alexandria, VA 22313-1450
www.uspto.gov

LADAS & PARRY LLP
224 SOUTH MICHIGAN AVENUE
SUITE 1600
CHICAGO IL 60604

COPY MAILED
JAN 11 2010

In re Application of	:	
Robert L. Russell	:	
Application No. 12/371,677	:	DECISION ON PETITION
Filed: February 16, 2009	:	TO MAKE SPECIAL UNDER
Attorney Docket No. CU-7106 BWH	:	37 CFR 1.102(c)(2)
	:	

This is a decision on the petition under 37 CFR 1.102(c)(2), filed December 23, 2009, to make the above-identified application special under the pilot program for applications pertaining to Green Technologies as set forth 74 Federal Register Notice 64666 (December 8, 2009).

The petition is **DISMISSED**.

If reconsideration of this decision is desired, a petition for reconsideration must be filed within ONE (1) MONTH OR THIRTY (30) DAYS from the mail date of this decision, whichever is longer. No extension of this time limit can be granted under 37 CFR 1.136(a) or (b). The petition for reconsideration should include an exhaustive attempt to provide the lacking item(s) noted below, since, after a decision on the petition for reconsideration, no further reconsideration or review of the matter will be undertaken by the Director.

A grantable petition to make an application special under 37 CFR 1.102(c)(2) and the pilot program as set forth in 74 FR 64666 must be directed to a nonprovisional application filed under 35 USC 111(a) or be a national stage entry under 35 USC 371, exclusive of any reissue applications and be filed prior to the date of the notice, December 8, 2009.

In order to qualify for special status, the following requirements must be met. 1) The application must be classified in one of the eligible US classifications listed in section VI of the notice. 2) The application must have no more than 3 independent claims and no more than 20 total claims. 3) The application must not contain any multiple dependent claims. 4) The petition must state the basis for seeking special status, i.e., the claimed invention either: A) materially enhances the quality of the environment or B) materially contributes to: i) the discovery or development of renewable energy resources, ii) the more efficient utilization and conservation of energy resources, or iii) greenhouse gas emission reduction. 5) If the disclosure is not clear on its face that the claimed invention materially contributes under category (A) or (B), the petition must be accompanied by a statement by the applicant, assignee, or an attorney/agent registered to practice

before the Office explaining how the materiality standard is met. 6) A statement that applicant will agree to make an election without traverse in a telephonic interview if a restriction requirement is made by the examiner. 7) The petition to make special must be filed electronically. 8) The petition must be filed at least one day prior to the date that a first Office Action appears in the Patent Application Information Retrieval (PAIR) system. 9) The petition must be accompanied by a request for early publication in compliance with 37 CFR 1.219 and include the publication fee as set forth in 37 CFR 1.18(d).

The requirement for a fee for consideration of the petition to make special for applications pertaining to Green Technologies has been waived.

The petition lacks items 1 and 5.

In regard to item 1, this application has been classified in an area (USPC 123/149A) that is not one of the eligible US classifications listed in section VI of the notice. Therefore, this application is not eligible for the Pilot Program. The classification limitations are purposefully made to be narrow for the Pilot Program; however, these may be expanded based upon the success of the Pilot Program. Petitioner may file a preliminary amendment that would cause this application to be classified elsewhere. However, while petitioner may suggest a classification (see, e.g., MPEP 708.02(a)(VII)(C)), the application will be assigned to the most appropriate classification based upon current U.S. classification guidelines. Furthermore, a petition for the Pilot Program should not be filed until and unless all of the requirements set forth in the Notice are met; i.e., a petition should not be filed for an application that is currently classified outside the eligible classifications set forth in the Notice.

In regard to item 5, petitioner states the materiality requirement is established on the face of the application and can be found at least in the Background of the Invention. It is not agreed the materiality is established on the face of the application. The Background of the Invention is more a discussion of how an engine/generator, in certain situations, represents an improvement over other power generating devices such as wind or wave powered generators. However, engine/generators are known per se. Petitioner has failed to state how the claimed invention contributes in a significant, substantial, or noticeable manner to the conservation of energy resources or to the reduction of greenhouse gas emission.

Further correspondence with respect to this matter should be addressed as follows:

By Mail: Mail Stop PETITION
Commissioner for Patents
P. O. Box 1450
Alexandria, VA 22313-1450

By hand: U. S. Patent and Trademark Office
Customer Service Window, Mail Stop Petitions
Randolph Building
401 Dulany Street
Alexandria, VA 22314

By FAX: (571) 273-8300

Telephone inquiries concerning this decision should be directed to Carl Friedman at 571-272-6842.

All other inquiries concerning either the examination or status of the application should be directed to the Technology Center.

The application is being forwarded to the Technology Center Art Unit 3747 for action in its regular turn.

Carl Friedman
Petitions Examiner
Office of Petitions

UNITED STATES PATENT AND TRADEMARK OFFICE

Commissioner for Patents
United States Patent and Trademark Office
P.O. Box 1450
Alexandria, VA 22313-1450
www.uspto.gov

AUSTIN BONDERER, ESQ.
644 BROOKWOOD ST.
BREA, CA 92821

COPY MAILED

APR 13 2009

OFFICE OF PETITIONS

In re Application of	:	
Pallatheri **SUBRAMANIAN**	:	
Application No. 12/371,682	:	DECISION ON PETITION TO MAKE
Filed: February 16, 2009	:	SPECIAL UNDER 37 CFR 1.102(C)(1)
Attorney Docket No. **Subu-04**	:	
	:	

This is a decision on the petition under 37 CFR 1.102(c)(1), filed February 16, 2009, to make the above-identified application special based on applicant's age as set forth in M.P.E.P. § 708.02, Section IV.

The petition is **GRANTED**.

A grantable petition to make an application special under 37 CFR 1.102(c)(1) and MPEP § 708.02, Section IV: Applicant's Age must be accompanied by evidence showing that at least one of the applicants is 65 years of age, or more, such as a birth certificate or a statement by applicant. No fee is required

The instant petition includes the driver's license of inventor Pallatheri Subramanian, attesting to his age. Accordingly, the above-identified application has been accorded "special" status.

Telephone inquiries concerning either the examination or status of the application should be directed to the Technology Center at (571) 272-1700.

Inquiries concerning this decision should be directed to the undersigned at 571-272-7253.

The application is being forwarded to the Technology Center AU 1797 for action on the merits commensurate with this decision.

/Monica A. Graves/
Petitions Examiner, Office of Petitions

UNITED STATES PATENT AND TRADEMARK OFFICE

Commissioner for Patents
United States Patent and Trademark Office
P.O. Box 1450
Alexandria, VA 22313-1450
www.uspto.gov

POTOMAC PATENT GROUP PLLC
P. O. BOX 270
FREDERICKSBURG VA 22404

COPY MAILED
FEB 17 2010

In re Application of	:	
Israel et al.	:	
Application No. 12/371,687	:	NOTICE
Filed: 02/16/2009	:	
Attorney Docket No. 0320-005 CON1	:	

This is a notice regarding your request for acceptance of a fee deficiency submission under 37 CFR 1.28 filed December 11, 2009.

The Office no longer investigates or rejects original or reissue applications under 37 CFR 1.56. 1098 Off. Gaz. Pat. Office 502 (January 3, 1989). Therefore, nothing in this Notice is intended to imply that an investigation was done.

Your fee deficiency submission under 37 CFR 1.28 is hereby ACCEPTED.

This application is no longer entitled to small entity status. Accordingly, all future fees paid in this application must be paid at the large entity rate.

Inquiries related to this communication should be directed to the undersigned at (571) 272-3211.

C. T. Donnell

Christina Tartera Donnell
Senior Petitions Attorney
Office of Petitions

UNITED STATES PATENT AND TRADEMARK OFFICE

Commissioner for Patents
United States Patent and Trademark Office
P.O. Box 1450
Alexandria, VA 22313-1450
www.uspto.gov

MARINUS B. BOSMA
5125 STUDEBAKER ROAD
TIPP CITY OH 45371-8728

March 23, 2009

In re Application of: BOSMA, MARINUS BERNARD BEN et al. Serial No.: 12/371750 Filed: 02/16/2009 Title: HINGED CHECKPOINT-FRIENDLY LAPTOP BAG AND METHOD OF USING SAME	:	DECISION ON PETITION TO MAKE SPECIAL FOR NEW APPLICATION UNDER 37 C.F.R. § 1.102 & M.P.E.P. § 708.02

This is a decision on the petition filed on February 16, 2009 to make the above-identified application special for accelerated examination procedure under 37 C.F.R. § 1.102(d).

The petition to make the application special is **DENIED**.

REGULATION AND PRACTICE

To be eligible for accelerated examination under 37 C.F.R. § 1.102(d) and pursuant to the "Change to Practice for Petitions in Patent Applications to Make Special and for Accelerated Examination" published in the Federal Register on June 26, 2006 (71 Fed. Reg. 36323), the following conditions must be satisfied:

1. The application must be a non-reissue utility or design application filed under 37 CFR 1.111(a);
2. The application, the petition and the required fees must be filed electronically using the USPTO's electronic filing system (EFS), or EFS-web; if not filed electronically, a statement asserting that EFS and EFS-web were not available during the normal business hours;
3. The application, at the time of filing, must be complete under 37 CFR 1.51 and in condition for examination;
4. The application must contain three or fewer independent claims and twenty or fewer total claims and the claims must be directed to a single invention.

The application as filed is not eligible for the accelerated examination under 37 C.F.R. § 1.102(d) because it was not complete under 37 CFR 1.51 and in condition for examination at the time of filing. The mailing of a Notice to File Corrected Application Papers on February 26, 2009 is evidence that the application was not complete and in condition for examination at the time of filing.

Note that the policy as published in the Federal Register on June 26, 2006 as outlined on 36326, part VIII, conditions for examination, section (D) conditions for examination include a specification in compliance with 37 CFR 1.52 at filing, and section (F) conditions for examination include drawings in compliance with 37 CFR 1.84. As the specification as filed was not in compliance with 37 CFR 1.52 at filing, because the claim(s) did not comply with 37 CFR 1.75(h), and the drawings as filed were not in compliance with 37 CFR 1.84 at filing, the application is not considered to be complete under 37 CFR 1.51 and not in condition for examination at the time of filing. Therefore, the application is ineligible for consideration under the accelerated examination program.

For the above-stated reasons, the petition is **DENIED**. The application will therefore be taken up by the examiner for action in its regular turn.

Any inquiry regarding this decision should be directed to Ehud Gartenberg, TC 3700 Special Program Examiner, at (571) 272-4828.

Ehud Gartenberg
Special Program Examiner
Technology Center 3700

UNITED STATES PATENT AND TRADEMARK OFFICE

Commissioner for Patents
United States Patent and Trademark Office
P.O. Box 1450
Alexandria, VA 22313-1450
www.uspto.gov

WOMBLE CARLYLE SANDRIDGE & RICE, PLLC
ATTN: PATENT DOCKETING
P.O. BOX 7037
ATLANTA GA 30357-0037

COPY MAILED

AUG 31 2009

OFFICE OF PETITIONS

In re Application of	:	
Luca Turin	:	
Application No. 12/371771	:	
Filing or 371(c) Date: 02/16/2009	:	
Attorney Docket Number:	:	DECISION
F081 1020.2	:	ON PETITION

This is a decision in response to the "Petition and Amendment Pursuant to 37 CFR 1.57(a)," filed June 2, 2009, requesting that the Office reinstate the filing date and enter the amendment filed with the present petition.

The petition is granted to the extent indicated below.

Background

Application papers in the above-identified application were deposited on February 16, 2009. However, on April 23, 2009, the Office of Patent Application Processing mailed Petitioners a "Notice of Incomplete Nonprovisional Application," notifying Petitioner that the application papers had NOT been accorded a filing date because the application was deposited without drawings. In response, Petitioner timely filed this petition. Petitioner request that this Office accord the application as filing date based upon a benefit claim to nonprovisional application no. 10/869,766. Petitioner also note that drawings are not a necessary part of the written description of the invention as claimed, and assert that as the application as-filed provided a complete written description of the claimed invention, a filing date should have been granted.

Petitioner's arguments and evidence have been considered. A review of the application confirms that, as filed, the application contained composition and method claims. The MPEP 601.01(f) provides that:

> It has been USPTO practice to treat an application that contains at least one process or method claim as an application for which a drawing is not necessary for an understanding

> of the invention under 35 U.S.C. 113 (first sentence). The same practice has been followed in composition claims.

Thus, pursuant to § 601.01(f), a drawing is not considered essential for a filing date. The present application is entitled to a filing date without drawings present in the application.

Accordingly, the Office should have granted the application a filing date and mailed a Notice of Omitted Items instead of a Notice of Incomplete Nonprovisional Application. As stated in MPEP 601.01(g) under the section entitled, "Application Entitled to a Filing Date," applicant may submit an amendment to include the inadvertently omitted portion of the drawing(s) pursuant to 37 CFR 1.57(a):

> [i]f an application was filed on or after September 21, 2004, and contains a claim under 37 CFR 1.55 for priority of a prior-filed foreign application, or a claim under 37 CFR 1.78 for the benefit of a prior-filed provisional, nonprovisional, or international application that was present on the filing date of the application, and the omitted portion of the drawing(s) was inadvertently omitted from the application and is completely contained in the prior-filed application[.]

Please note that no petition is required and that the amendment must comply with 37 CFR 1.57(a) and 37 CFR 1.121. See MPEP § 201.17. Entry of the amendment filed with the petition will be determined by the examiner.

To the extent the present petition requests a filing date of February 16, 2009 with no drawings present in the application, the petition is **GRANTED**.

Given the basis for granting this petition, no petition fee is due. The petition fee has been refunded to Applicant's deposit account as authorized in the present petition.

Pursuant to this decision, the application will be referred to OPAP for:

X **correction of the filing date to February 16, 2009**;
X **for indication in Office records, as appropriate, that "0" sheets of drawings were required or present on filing** and
X **for issuance of a filing receipt.**

Telephone inquiries concerning this matter should be directed to Attorney Derek Woods at (571) 272-3232.

Anthony Knight
Supervisor
Office of Petitions

UNITED STATES PATENT AND TRADEMARK OFFICE

COMMISSIONER FOR PATENTS
UNITED STATES PATENT AND TRADEMARK OFFICE
P.O. BOX 1450
ALEXANDRIA, VA 22313-1450
WWW.USPTO.GOV

Paper No.

J C PATENTS
4 VENTURE, SUITE 250
IRVINE CA 92618

COPY MAILED
NOV 24 2009
OFFICE OF PETITIONS

In re Application of	:	
Chang	:	
Application No. 12/371,820	:	DECISION ON PETITION
Filed: February 16, 2009	:	PURSUANT TO
Attorney Docket No.: JCLA29395	:	37 C.F.R. § 1.28(c)
Title: FLASH MEMORY STORAGE	:	
SYSTEM, AND CONTROLLER AND	:	
METHOD FOR ANTI-FALSIFYING DATA	:	
THEREOF	:	

This is a notice regarding your request for acceptance of a fee deficiency submission pursuant to 37 C.F.R. § 1.28, received on August 26, 2009. On September 1, 1998, the Court of Appeals for the Federal Circuit held that 37 C.F.R. § 1.28(c) is the sole provision governing the time for correction of the erroneous payment of the issue fee as a small entity. See DH Technology v. Synergystex International, Inc. 154 F.3d 1333, 47 USPQ2d 1865 (Fed. Cir. Sept. 1, 1998).

The Office no longer investigates or rejects original or reissue applications under 37 C.F.R. § 1.56. 1098 Off. Gaz. Pat. Office 502 (January 3, 1989). Therefore, nothing in this notice is intended to imply that an investigation was done.

Petitioner has identified the particular type of fee that was erroneously paid as a small entity, when the small entity fee was actually paid, the small entity fee that was actually paid, the deficiency owed amount, and the total deficiency payment owed.

Your fee deficiency submission pursuant to 37 C.F.R. § 1.28(c) is hereby accepted. The petition is **GRANTED** accordingly.

The deficiency payment has been deducted from Petitioner's Deposit Account.

This application is no longer entitled to small entity status. Accordingly, all future fees paid in this application must be paid at the large entity rate.

The Technology Center will be notified of this decision.

Telephone inquiries regarding *this decision* should be directed to the undersigned at (571) 272-3225.[1] All other inquiries concerning examination procedures or status of the application should be directed to the Technology Center.

/Paul Shanoski/
Paul Shanoski
Senior Attorney
Office of Petitions

---

1 Petitioner will note that all practice before the Office should be in writing, and the action of the Office will be based exclusively on the written record in the Office. See 37 C.F.R. § 1.2. As such, Petitioner is reminded that no telephone discussion may be controlling or considered authority for Petitioner's further action(s).

UNITED STATES PATENT AND TRADEMARK OFFICE

Commissioner for Patents
United States Patent and Trademark Office
P.O. Box 1450
Alexandria, VA 22313-1450
www.uspto.gov

ABSOLUTE TECHNOLOGY LAW GROUP LLC
135 W. WELLS ST.
SUITE 518
MILWAUKEE, WI 53203

MAILED

SEP 22 2009

OFFICE OF PETITIONS

In re Application of	:	
Robin Bender Bender	:	
Application No. 12/371,870	:	DECISION ON PETITION
Filed: February 16, 2009	:	TO WITHDRAW
Attorney Docket No. BENDER-NP-0209	:	FROM RECORD
	:	

This is a decision on the Request to Withdraw as attorney or agent of record under 37 C.F.R. § 1.36(b), filed July 15, 2009.

The request is **NOT APPROVED**.

A grantable request to withdraw as attorney/agent of record must be signed by every attorney/agent seeking to withdraw or contain a clear indication that one attorney is signing on behalf of another/others

The request cannot be approved because practitioners were appointed by customer number. Petitioner must request withdrawal in the same manner by which they were appointed.

All future communications from the Office will continue to be directed to the above-listed address until otherwise notified by applicant.

Telephone inquiries concerning this decision should be directed to undersigned at 571-272-1642. All other inquiries concerning the examination or status of this application should be directed to the Technology Center.

/AMW/
April M. Wise
Petitions Examiner
Office of Petitions

cc: ROBIN BENDER
N13628 OTTER WAY
WAUSAUKEE, WI 54177

UNITED STATES PATENT AND TRADEMARK OFFICE

Commissioner for Patents
United States Patent and Trademark Office
P.O. Box 1450
Alexandria, VA 22313-1450
www.uspto.gov

ABSOLUTE TECHNOLOGY LAW GROUP LLC
135 W. WELLS ST.
SUITE 518
MILWAUKEE WI 53203

MAILED

NOV 23 2009

OFFICE OF PETITIONS

In re Application of	:	
Robin Bender Bender	:	
Application No. 12/371,870	:	DECISION ON PETITION
Filed: February 16, 2009	:	TO WITHDRAW
Attorney Docket No. BENDER_NP_0209	:	FROM RECORD
	:	

This is a decision on the renewed Request to Withdraw as attorney or agent of record under 37 C.F.R. § 1.36(b), filed October 1, 2009.

The request is **DISMISSED** as moot.

A review of the file record indicates that the power of attorney to Absolute Technology Way Group, LLP has been revoked by the assignee of the patent application on November 6, 2009. Accordingly, the request to withdraw under 37 C.F.R. § 1.36(b) is moot.

All future communications from the Office will continue to be directed to the below-listed address until otherwise notified by applicant.

Telephone inquires concerning this decision should be directed to undersigned at 571-272-1642. All other inquiries concerning the examination or status of this application should be directed to the Technology Center.

/AMW/
April M. Wise
Petitions Examiner
Office of Petitions

cc: ROBIN BENDER BENDER
N13628 OTTER WAY
WAUSAUKEE, WI 54177

UNITED STATES PATENT AND TRADEMARK OFFICE

UNITED STATES DEPARTMENT OF COMMERCE
United States Patent and Trademark Office
Address: COMMISSIONER FOR PATENTS
P.O. Box 1450
Alexandria, Virginia 22313-1450
www.uspto.gov

ConocoPhillips Company - IP Services Group
Attention: DOCKETING
600 N. Dairy Ashford
Bldg. MA-1135
Houston, TX 77079

Mail Date: 04/20/2010

Applicant	: Bradley M. Taylor	: DECISION ON REQUEST FOR
Patent Number	: 7659438	: RECALCULATION of PATENT
Issue Date	: 02/09/2010	: TERM ADJUSTMENT IN VIEW
Appliction No	: 12/371,997	: OF WYETH
Filed	: 02/17/2009	:
		:

The Patentee's Request for Recalculation is **DISMISSED.**

This Request is deemed ineligible for consideration for one or more of the following reasons:

(A). The patent for which PTA recalculation is requested is either a design or reissue application or is a reexamination proceeding;

(B). The patent for which PTA recalculation is requested resulted from a utility or plant application filed under 35 USC 111(a) before May 29, 2000 and no CPA filed in the application on/after May 29, 2000;

(C). The patent for which PTA recalculation is requested resulted from an international application in which the international filing date was before May 29, 2000 and no CPA filed in the application on/after May 29, 2000;

(D). The patent for which PTA recalculation is requested issued on/after March 2, 2010;

(E). The Request for Recalculation was filed more than 180 days after the grant date of the patent and the request was not filed within two months of a dismissal of a request for reconsideration of the of the patent term under 37 CFR 1.705(d);

(F). The Request for Recalculation is not solely limited to USPTO pre-Wyeth interpretation of 35 U.S.C. 154(b)(2)(A);

or

(G). A civil action was filed pursuant to 35 U.S.C. 154(b)(4)(A)concerning the same patent at issue in this request.

Patentee may file a reply to this decision dismissing the Request for Recalculation. Patentee must file such reply within one month or thirty days, whichever is longer, of the mail date of the decision dismissing the Request for Recalculation. No fee is required if patentee is asserting in the reply that the dismissal for ineligibility is improper.

Patentee should use document code PET.OP if electronically filing a reply to this dismissal. If the USPTO finds that the request was improperly deemed ineligible, the USPTO will mail applicant a recalculation determination.

Patentee should be aware that in order to preserve the right to review in the United States District Court for the District of Columbia of the USPTO patent term adjustment determination, patentee must ensure that he or she also take the steps required under 35 U.S.C. 154(b)(4)(A). Nothing in the request for recalculation should be construed as providing an alternative time frame for commencing a civil action under 35 U.S.C. 154 (b)(4)(A).

Any questions concerning this decision should be directed to the Office of Patent Legal Administration at 571-272-7702.

UNITED STATES PATENT AND TRADEMARK OFFICE

Commissioner for Patents
United States Patent and Trademark Office
P.O. Box 1450
Alexandria, VA 22313-1450
www.uspto.gov

BUCHANAN INGERSOLL PROFESSIONAL CORPORATION
ONE OXFORD CENTRE
301 GRANT STREET, 20TH FLOOR
PITTSBURGH PA 15219-1410

MAILED

MAR 16 2009

OFFICE OF PETITIONS

In re Application of	:	
SAPPER, Richard et al.	:	
Application No. 12/372,110	:	DECISION ON PETITION
Filed: February 17, 2009	:	TO MAKE SPECIAL UNDER
Attorney Docket No. **080532**	:	37 CFR 1.102(c)(1)
	:	

This is a decision on the petition under 37 CFR 1.102(c)(1), filed February 17, 2009, to make the above-identified application special based on applicant's age as set forth in M.P.E.P. § 708.02, Section IV.

The petition is **GRANTED**.

A grantable petition to make an application special under 37 CFR 1.102(c)(1) and MPEP § 708.02, Section IV: Applicant's Age must be accompanied by evidence showing that at least one of the applicants is 65 years of age, or more, such as a birth certificate or a statement by applicant. No fee is required

The instant petition includes a statement by Richard Sapper attesting that he is over 65 years of age. Accordingly, the above-identified application has been accorded "special" status.

Telephone inquiries concerning this decision should be directed to the undersigned at 571-272-4231.

All other inquiries concerning either the examination or status of the application should be directed to the Technology Center.

This application is being referred to the Office of Patent Application Processing. This application will be accorded "special" status when pre-examination processing is done.

Michelle R. Eason

Michelle R. Eason
Paralegal Specialist
Office of Petitions

UNITED STATES PATENT AND TRADEMARK OFFICE

Commissioner for Patents
United States Patent and Trademark Office
P.O. Box 1450
Alexandria, VA 22313-1450
www.uspto.gov

COPY MAILED

Paper No.

DEC 23 2009

OFFICE OF PETITIONS

J C PATENTS
4 VENTURE, SUITE 250
IRVINE CA 92618

In re Application of Luo Application No. 12/372,123 Filed: February 17, 2009 Attorney Docket No.: JCLA29393 Title: MOTHERBOARD, STORAGE DEVICE AND CONTROLLER THEREOF, AND BOOTING METHOD	DECISION ON PETITION PURSUANT TO 37 C.F.R. § 1.28(c)

This is a notice regarding your request for acceptance of a fee deficiency submission pursuant to 37 C.F.R. § 1.28, received on August 26, 2009. On September 1, 1998, the Court of Appeals for the Federal Circuit held that 37 C.F.R. § 1.28(c) is the sole provision governing the time for correction of the erroneous payment of the issue fee as a small entity. See DH Technology v. Synergystex International, Inc. 154 F.3d 1333, 47 USPQ2d 1865 (Fed. Cir. Sept. 1, 1998).

The Office no longer investigates or rejects original or reissue applications under 37 C.F.R. § 1.56. 1098 Off. Gaz. Pat. Office 502 (January 3, 1989). Therefore, nothing in this notice is intended to imply that an investigation was done.

Petitioner has identified the particular type of fee that was erroneously paid as a small entity, when the small entity fee was actually paid, the small entity fee that was actually paid, the deficiency owed amount, and the total deficiency payment owed.

Your fee deficiency submission pursuant to 37 C.F.R. § 1.28(c) is hereby accepted. The petition is **GRANTED** accordingly.

The deficiency payment has been deducted from Petitioner's Deposit Account.

This application is no longer entitled to small entity status. Accordingly, all future fees paid in this application must be paid at the large entity rate.

The Technology Center will be notified of this decision.

Telephone inquiries regarding *this decision* should be directed to the undersigned at (571) 272-3225.[1] All other inquiries concerning examination procedures or status of the application should be directed to the Technology Center.

/Paul Shanoski/
Paul Shanoski
Senior Attorney
Office of Petitions

---

1 Petitioner will note that all practice before the Office should be in writing, and the action of the Office will be based exclusively on the written record in the Office. See 37 C.F.R. § 1.2. As such, Petitioner is reminded that no telephone discussion may be controlling or considered authority for Petitioner's further action(s).

UNITED STATES PATENT AND TRADEMARK OFFICE

UNITED STATES DEPARTMENT OF COMMERCE
United States Patent and Trademark Office
Address: COMMISSIONER FOR PATENTS
P.O. Box 1450
Alexandria, Virginia 22313-1450
www.uspto.gov

APPLICATION NO.	FILING DATE	FIRST NAMED INVENTOR	ATTORNEY DOCKET NO.	CONFIRMATION NO.
12/372,160	02/17/2009	Heizaburo Kato	21322/0211481-US0	9159

7278 7590 01/28/2010
DARBY & DARBY P.C.
P.O. BOX 770
Church Street Station
New York, NY 10008-0770

EXAMINER

ART UNIT	PAPER NUMBER
3726	

MAIL DATE	DELIVERY MODE
01/28/2010	PAPER

Please find below and/or attached an Office communication concerning this application or proceeding.

The time period for reply, if any, is set in the attached communication.

UNITED STATES PATENT AND TRADEMARK OFFICE

Commissioner for Patents
United States Patent and Trademark Office
P.O. Box 1450
Alexandria, VA 22313-1450
www.uspto.gov

DARBY & DARBY P.C.
P.O. BOX 770
Church Street Station
New York NY 10008-0770

In re Application of: KATO, HEIZABURO et al Serial No.: 12/372,160 Filed: Feb. 17, 2009 Docket: 21322/0211481-US0 Title: MACHINING UNIT AND MACHINE TOOL	DECISION ON REQUEST TO PARTICIPATE IN PATENT PROSECUTION HIGHWAY (PPH) AND PETITION TO MAKE SPECIAL UNDER 37 CFR 1.102(d)

This is a decision on the request to participate in the Patent Prosecution Highway (PPH) program and the petition under 37 CFR 1.102(d), filed January 27, 2010, to make the above-identified application special.

The request and petition are **GRANTED**.

A grantable request to participate in the PPH program and petition to make special require:

(1) The U.S. application must validly claim priority under 35 U.S.C. 119(a) to one or more corresponding application(s) filed in the JPO or to a PCT application that does not contain any priority claim, or the U.S. application must be a national stage entry of a PCT application that does not contain any priority claim;
(2) Applicant must submit a copy of the allowable/patentable claim(s) from the JPO application(s) along with an English translation thereof and a statement that the English translation is accurate;
(3) All the claims in the U.S. application must sufficiently correspond or be amended to sufficiently correspond to the allowable/patentable claim(s) in the JPO application(s);
(4) Examination of the U.S. application has not begun;
(5) Applicant must submit a copy of all the office actions from each of the JPO application(s) containing the allowable/patentable claim(s) along with an English translation thereof and a statement that the English translation is accurate;
(6) Applicant must submit an IDS listing the documents cited by the JPO examiner in the JPO office action along with copies of documents except U.S. patents or U.S. patent application publications; and
(7) The required petition fee under 37 CFR 1.17(h.

The request to participate in the PPH program and the petition comply with the above requirements. Accordingly, the above-identified application has been accorded "special" status.

The application is being forwarded to the examiner for action on the merits commensurate with this decision.

Telephone inquiries concerning this decision should be directed to Henry C. Yuen at 571-272-4856. Telephone inquiries concerning the status of this application should be directed to the Supervisory Patent Examiner, Mr. David Bryant, Art Unit 3726 at 571-272-4526.

Petition is **granted**.

/Henry C. Yuen/

Henry C. Yuen, Special Programs Examiner
Technology Center 3700 – Mechanical Engineering,
Manufacturing and Products
571-272-4856

UNITED STATES PATENT AND TRADEMARK OFFICE

Commissioner for Patents
United States Patent and Trademark Office
P.O. Box 1450
Alexandria, VA 22313-1450
www.uspto.gov

MCNEES WALLACE & NURICK LLC
100 PINE STREET
P.O. BOX 1166
HARRISBURG PA 17108-1166

MAILED

MAY 14 2010

OFFICE OF PETITIONS

In re Application of	:	
Joseph AMACKER et al.	:	
Application No. 12/372,247	:	DECISION ON PETITION
Filed: February 17, 2009	:	TO WITHDRAW
Attorney Docket No. **27874-0001**	:	FROM RECORD
	:	

This is a decision on the Request to Withdraw as attorney or agent of record under 37 C.F.R. § 1.36(b), filed April 16, 2010.

The request is **NOT APPROVED**.

The Office will no longer accept address changes to a new practitioner or law firm filed with a Request, absent the filing of a power of attorney to the new representative. The Office will either change the correspondence address of record to the most current address information provided for the assignee of the entire interest who properly became of record under 37 CFR 3.71 or, if no assignee of the entire interest has properly been made of record under 37 CFR 3.71, the most current address information provided for the first named inventor.

37 CFR 3.71(c) states:

An assignee becomes of record either in a national patent application or a reexamination proceeding by filing a statement in compliance with § 3.73(b) that is signed by a party who is authorized to act on behalf of the assignee.

Therefore, as there is currently no statement under 37 CFR 3.73(b) of record in the instant application, the Office cannot change the correspondence address to the address on the Request for Withdrawal.

All future communications from the Office will continue to be directed to the above-listed address until otherwise notified by applicant.

Telephone inquiries concerning this decision should be directed to the undersigned at 571-272-4231.

Michelle R. Eason
Paralegal Specialist
Office of Petitions

cc: **AMACKER LLC**
P.O. BOX 841
4534 HIGHWAY 80 WEST
RAYVILLE, LA 71269

UNITED STATES PATENT AND TRADEMARK OFFICE

Commissioner for Patents
United States Patent and Trademark Office
P.O. Box 1450
Alexandria, VA 22313-1450
www.uspto.gov

GOUDREAU GAGE DUBUC
2000 MCGILL COLLEGE
SUITE 2200
MONTREAL QC H3A 3H3 CA CANADA

MAILED

JUL 02 2010

OFFICE OF PETITIONS

In re Application	:	
Nicholas Karnis	:	DECISION ON PETITION
Application No. 12/372,261	:	TO WITHDRAW
Filed: February 17, 2009	:	FROM RECORD
Attorney Docket No. 771/15070.2	:	

This is a decision on the Request to Withdraw as attorney or agent of record under 37 C.F.R. § 1.36(b) filed May 17, 2010, which is being treated as a request to withdraw from employment in a proceeding before the Office under 37 C.F.R. § 10.40.

The request is **DISMISSED**.

A review of the file record indicates that Goudreau Gage Dubuc, was not appointed power of attorney in this patent application and has only been designated as the correspondence address of record. Accordingly, the request to withdraw under 37 C.F.R. § 1.36(b) is not applicable.

In view of the above, the address of record will remain unchanged.

Petitioner should note that the Office no longer accepts address changes to a new practitioner or law firm filed with requests under 37 C.F.R. § 1.36(b). The Office will only accept correspondence address changes to the most current address information provided for the assignee of the entire interest *who properly became of record under 37 CFR 3.71,* or, if no assignee of the entire interest has properly been made of record, the most current address information provided for the first named inventor.

Telephone inquires concerning this decision should be directed to the undersigned at (571) 272-6059. All other inquires concerning either the examination or status of the application should be directed to the Technology Center.

A. Kelley

Alicia Kelley
Petitions Examiner
Office of Petitions

(12) INTERNATIONAL APPLICATION PUBLISHED UNDER THE PATENT COOPERATION TREATY (PCT)

(19) World Intellectual Property Organization
International Bureau

(43) International Publication Date
6 May 2005 (06.05.2005)

PCT

(10) International Publication Number
WO 2005/041099 A1

(51) International Patent Classification[7]: G06F 17/60

(21) International Application Number: PCT/US2003/030417

(22) International Filing Date: 26 September 2003 (26.09.2003)

(25) Filing Language: English

(26) Publication Language: English

(71) Applicants and
(72) Inventors: **GARDNER, Catherine, V.** [US/US]; 109 Lakeridge Lane, Spartanburg, SC 29301 (US). **GARRISON, Lance** [US/US]; 1978 Pompano Drive, Garden City, SC 29576 (US). **GARRISON, Brandy** [US/US]; 1978 Pompano Drive, Garden City, SC 29576 (US). **MILES, Natalie** [US/US]; 3 Chancefield Plantation, Camden, SC 29020 (US). **MILES, Joseph** [US/US]; 208 Laurens Street, Camden, SC 29020 (US).

(72) Inventor; and
(75) Inventor/Applicant *(for US only)*: **KAISER, Neal** [US/US]; 127 Pembroke Street #5, Boston, MA 02118 (US).

(74) Agents: **HARDAWAY, John, B., III** et al.; NEXSEN PRUET JACOBS & POLLARD, LLC, P.O. Box 10107, Greenville, SC 29603 (US).

(81) Designated States *(national)*: AE, AG, AL, AM, AT, AU, AZ, BA, BB, BG, BR, BY, BZ, CA, CH, CN, CO, CR, CU, CZ, DE, DK, DM, DZ, EC, EE, EG, ES, FI, GB, GD, GE, GH, GM, HR, HU, ID, IL, IN, IS, JP, KE, KG, KP, KR, KZ, LC, LK, LR, LS, LT, LU, LV, MA, MD, MG, MK, MN, MW, MX, MZ, NI, NO, NZ, OM, PG, PH, PL, PT, RO, RU, SC, SD, SE, SG, SK, SL, SY, TJ, TM, TN, TR, TT, TZ, UA, UG, US, UZ, VC, VN, YU, ZA, ZM, ZW.

(84) Designated States *(regional)*: ARIPO patent (GH, GM, KE, LS, MW, MZ, SD, SL, SZ, TZ, UG, ZM, ZW),

[Continued on next page]

(54) Title: VIRTUAL SHOPPING SYSTEM

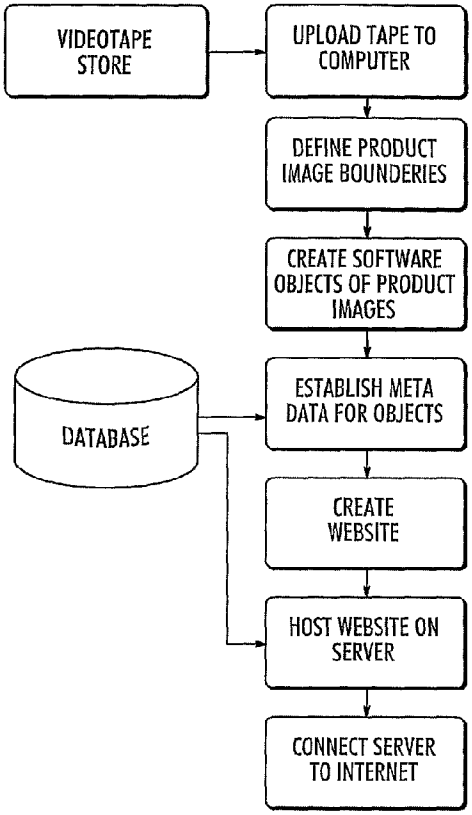

(57) Abstract: A method for making a virtual store (10) for use in shopping on-line includes the steps of digitally imaging a real store using a digital imaging device, creating software objects that correspond to the boundaries of the items (32) whose images are shown in the image, associating information about the products (32) with these computer objects as metadata, and then storing a website that includes the digital image on a hosting server. The hosting server is connected to a database where the product information is stored so that the user who accesses the website can obtain product information by clicking on the images of the items (32). A user can access the website, navigate the virtual store, make selections for purchase, and arrange to take possession of the purchased items (32) in a manner that closely parallels shopping at a physical store.

WO 2005/041099 A1

Eurasian patent (AM, AZ, BY, KG, KZ, MD, RU, TJ, TM), European patent (AT, BE, BG, CH, CY, CZ, DE, DK, EE, ES, FI, FR, GB, GR, HU, IE, IT, LU, MC, NL, PT, RO, SE, SI, SK, TR), OAPI patent (BF, BJ, CF, CG, CI, CM, GA, GN, GQ, GW, ML, MR, NE, SN, TD, TG).

Declarations under Rule 4.17:

— *as to applicant's entitlement to apply for and be granted a patent (Rule 4.17(ii)) for the following designations AE, AG, AL, AM, AT, AU, AZ, BA, BB, BG, BR, BY, BZ, CA, CH, CN, CO, CR, CU, CZ, DE, DK, DM, DZ, EC, EE, EG, ES, FI, GB, GD, GE, GH, GM, HR, HU, ID, IL, IN, IS, JP, KE, KG, KP, KR, KZ, LC, LK, LR, LS, LT, LU, LV, MA, MD, MG, MK, MN, MW, MX, MZ, NI, NO, NZ, OM, PG, PH, PL, PT, RO, RU, SC, SD, SE, SG, SK, SL, SY, TJ, TM, TN, TR, TT, TZ, UA, UG, UZ, VC, VN, YU, ZA, ZM, ZW, ARIPO patent (GH, GM, KE, LS, MW, MZ, SD, SL, SZ, TZ, UG, ZM, ZW), Eurasian patent (AM, AZ, BY, KG, KZ, MD, RU, TJ, TM), European patent (AT, BE, BG, CH, CY, CZ, DE, DK, EE, ES, FI, FR, GB, GR, HU, IE, IT, LU, MC, NL, PT, RO, SE, SI, SK, TR), OAPI patent (BF, BJ, CF, CG, CI, CM, GA, GN, GQ, GW, ML, MR, NE, SN, TD, TG)*

— *as to applicant's entitlement to apply for and be granted a patent (Rule 4.17(ii)) for the following designations AE, AG, AL, AM, AT, AU, AZ, BA, BB, BG, BR, BY, BZ, CA, CH, CN, CO, CR, CU, CZ, DE, DK, DM, DZ, EC, EE, EG, ES, FI, GB, GD, GE, GH, GM, HR, HU, ID, IL, IN, IS, JP, KE, KG, KP, KR, KZ, LC, LK, LR, LS, LT, LU, LV, MA, MD, MG, MK, MN, MW, MX, MZ, NI, NO, NZ, OM, PG, PH, PL, PT, RO, RU, SC, SD, SE, SG, SK, SL, SY, TJ, TM, TN, TR, TT, TZ, UA, UG, UZ, VC, VN, YU, ZA, ZM, ZW, ARIPO patent (GH, GM, KE, LS, MW, MZ, SD, SL, SZ, TZ, UG, ZM, ZW), Eurasian patent (AM, AZ, BY, KG, KZ, MD, RU, TJ, TM), European patent (AT, BE, BG, CH, CY, CZ, DE, DK, EE, ES, FI, FR, GB, GR, HU, IE, IT, LU, MC, NL, PT, RO, SE, SI, SK, TR), OAPI patent (BF, BJ, CF, CG, CI, CM, GA, GN, GQ, GW, ML, MR, NE, SN, TD, TG)*

— *as to applicant's entitlement to apply for and be granted a patent (Rule 4.17(ii)) for the following designations AE, AG, AL, AM, AT, AU, AZ, BA, BB, BG, BR, BY, BZ, CA, CH, CN, CO, CR, CU, CZ, DE, DK, DM, DZ, EC, EE, EG, ES, FI, GB, GD, GE, GH, GM, HR, HU, ID, IL, IN, IS, JP, KE, KG, KP, KR, KZ, LC, LK, LR, LS, LT, LU, LV, MA, MD, MG, MK, MN, MW, MX, MZ, NI, NO, NZ, OM, PG, PH, PL, PT, RO, RU, SC, SD, SE, SG, SK, SL, SY, TJ, TM, TN, TR, TT, TZ, UA, UG, UZ, VC, VN, YU, ZA, ZM, ZW, ARIPO patent (GH, GM, KE, LS, MW, MZ, SD, SL, SZ, TZ, UG, ZM, ZW), Eurasian patent (AM, AZ, BY, KG, KZ, MD, RU, TJ, TM), European patent (AT, BE, BG, CH, CY, CZ, DE, DK, EE, ES, FI, FR, GB, GR, HU, IE, IT, LU, MC, NL, PT, RO, SE, SI, SK, TR), OAPI patent (BF, BJ, CF, CG, CI, CM, GA, GN, GQ, GW, ML, MR, NE, SN, TD, TG)*

— *as to applicant's entitlement to apply for and be granted a patent (Rule 4.17(ii)) for the following designations AE, AG, AL, AM, AT, AU, AZ, BA, BB, BG, BR, BY, BZ, CA, CH, CN, CO, CR, CU, CZ, DE, DK, DM, DZ, EC, EE, EG, ES, FI, GB, GD, GE, GH, GM, HR, HU, ID, IL, IN, IS, JP, KE, KG, KP, KR, KZ, LC, LK, LR, LS, LT, LU, LV, MA, MD, MG, MK, MN, MW, MX, MZ, NI, NO, NZ, OM, PG, PH, PL, PT, RO, RU, SC, SD, SE, SG, SK, SL, SY, TJ, TM, TN, TR, TT, TZ, UA, UG, UZ, VC, VN, YU, ZA, ZM, ZW, ARIPO patent (GH, GM, KE, LS, MW, MZ, SD, SL, SZ, TZ, UG, ZM, ZW), Eurasian patent (AM, AZ, BY, KG, KZ, MD, RU, TJ, TM), European patent (AT, BE, BG, CH, CY, CZ, DE, DK, EE, ES, FI, FR, GB, GR, HU, IE, IT, LU, MC, NL, PT, RO, SE, SI, SK, TR), OAPI patent (BF, BJ, CF, CG, CI, CM, GA, GN, GQ, GW, ML, MR, NE, SN, TD, TG)*

— *as to applicant's entitlement to apply for and be granted a patent (Rule 4.17(ii)) for the following designations AE, AG, AL, AM, AT, AU, AZ, BA, BB, BG, BR, BY, BZ, CA, CH, CN, CO, CR, CU, CZ, DE, DK, DM, DZ, EC, EE, EG, ES, FI, GB, GD, GE, GH, GM, HR, HU, ID, IL, IN, IS, JP, KE, KG, KP, KR, KZ, LC, LK, LR, LS, LT, LU, LV, MA, MD, MG, MK, MN, MW, MX, MZ, NI, NO, NZ, OM, PG, PH, PL, PT, RO, RU, SC, SD, SE, SG, SK, SL, SY, TJ, TM, TN, TR, TT, TZ, UA, UG, UZ, VC, VN, YU, ZA, ZM, ZW, ARIPO patent (GH, GM, KE, LS, MW, MZ, SD, SL, SZ, TZ, UG, ZM, ZW), Eurasian patent (AM, AZ, BY, KG, KZ, MD, RU, TJ, TM), European patent (AT, BE, BG, CH, CY, CZ, DE, DK, EE, ES, FI, FR, GB, GR, HU, IE, IT, LU, MC, NL, PT, RO, SE, SI, SK, TR), OAPI patent (BF, BJ, CF, CG, CI, CM, GA, GN, GQ, GW, ML, MR, NE, SN, TD, TG)*

— *of inventorship (Rule 4.17(iv)) for US only*

Published:

— *with international search report*

For two-letter codes and other abbreviations, refer to the "Guidance Notes on Codes and Abbreviations" appearing at the beginning of each regular issue of the PCT Gazette.

TITLE

VIRTUAL SHOPPING SYSTEM

FIELD OF THE INVENTION

[0001] The present invention relates generally to the use of the Internet for purchasing goods. More particularly, it relates to the act of shopping at home using a personal computer and Internet technology.

BACKGROUND OF THE INVENTION

[0002] Many people like to shop; many do not. Some of those who like to shop have little time to do so. Some people like to shop for some types of goods but find shopping for other items, such as groceries, to be a chore because it must be done at frequent intervals and often at inconvenient times. Finally, some people cannot shop because of disabilities or other factors.

[0003] The explosive growth of the Internet has made it possible to purchase goods on-line. Stores may have web sites that have pictures of the goods or lists of goods. By "clicking" on the item or indicating a choice in some other conventional way, a shopper may purchase an item on-line. Often there is an abundance of information available on a web site about particular goods. Nonetheless, many shoppers, particularly those who like to shop, do not feel comfortable shopping on-line and prefer the "look and feel" of a real store to a virtual one. Thus, shopping on-line has advantages and disadvantages.

[0004] Grocery shopping on-line, such as the PEAPOD web site, has been attempted but has met with limited success. If a shopper knows what he wants, on-line grocery store web sites can work well and can save time. If the shopper wants to browse, the amount of time required to select an item starts to increase because of the goods of a particular category are not all available to "see" at one time. Furthermore, for those who are particularly comfortable with a local store, shopping at a different store, one only accessible on-line, can seem somewhat off-putting or strange.

[0005] Finally, although many physical stores may be convenient to shoppers, other stores are less conveniently located, perhaps even far away. Shopping at these stores in person rather than on-line may be out of the question except on rare occasions. However, given the typical on-line web site for retail establishments, on-line shopping at such stores may be a pale comparison to shopping in the physical store, both in terms of the shopping experience and the level of service provided.

[0006] While computer hardware is becoming faster and cheaper and Internet access speeds are increasingly faster and broadband connections more prevalent, the process of buying goods on-line has not changed since the beginning of web browsing. The modern day approach is lacking in user interaction with the products and services, primarily as the result of the inherent limitations of thin client, HTML (hypertext markup language) based applications.

[0007] Thus there remains a need for a better way for shoppers to shop in a convenient and comfortable way on-line.

SUMMARY OF THE INVENTION

[0008] According to its major aspects and briefly recited, the present invention is a method and system for on-line shopping. "On-line" means using the Internet, extranet or a private network of computers accessible via a telecommunications network, and which network will be referred to herein simply and collectively as the "Internet." The Internet facilitates communication between a physical store and a shopper so that the shopper may shop at that store from anywhere there is access to a personal computer and to the Internet. The present method includes digitally imaging the aisles in a store, making software objects of each item, associating the software objects with certain coordinates of the digital store imaging, and then making the virtual store thus created available for on-line access over the internet using computer servers. The system includes a database, the digitally imaged store, an internet application server, and software programmed for hosting the web site and facilitating downloading and streaming of the "virtual store" to the computers of those accessing the website and who wish to shop at that virtual store. The system also includes a client-side software application that shoppers will use to view the store. This client application will use standard TCP/IP protocol and may be embedded in a web browser or used as a stand-alone application. The software application allows the shopper to navigate the store to find and examine "virtual" goods of interest in the same context the shopper might find them if the shopper were to visit the store itself and examine the physical goods. The software application allows the shopper not only to interact with the digital imaging of the real store, but also to consider those goods for purchase, to obtain buying decision information and to make a product selection, to pay for the selected products and to arrange for their physical receipt.

[0009] The present system relies on a thick client user interface and enterprise e-commerce business objects for browsing and purchasing goods on-line.

Through the use of a rich graphical user interface, streamed and downloaded digital imaging and, in an alternative embodiment, audio feeds over broadband internet connections, three-dimensional interactive product models, and complex business objects and rules, this software application will allow shoppers to experience a more realistic "in store" feel when buying goods on-line than possible by viewing simple product lists and thumbnail two-dimensional images of products, such as are typically found with prior art on-line stores. The digital imaging can be downloaded in real-time for those users with a broadband Internet connection, or it may be delivered on a CD (compact disk) and installed locally for those accessing the Internet on slower connections. For those on slower connections, the thick client user interface will connect to the server only to download up-to-date information such as inventory status, pricing, product reviews, etc. All digital imaging and audio will be locally delivered from the CD data.

[0010] The present invention is not limited to retail stores having goods only on shelves. It can be adapted for use by stores having other types of conventional displays, such as clothing stores, jewelry stores and car dealerships. With many types of goods such as these, as opposed to the more familiar grocery store items, additional information may be required in order for the shopper to make a purchasing decision.

[0011] A feature of the present invention is the use of digital imaging of an actual store so that the on-line shoppers can view the products in the context they would see them were they actually in the store itself. This feature is very important in overcoming the natural barrier many people have in shopping on-line. By making the on-line shopping experience as familiar and visual as possible, the on-line shopper will be more at ease and thus more inclined to focus on purchasing decisions. Furthermore, shopping can take place more quickly because it is similar to the actual in-store experience of the shopper.

[0012] Another feature of the present invention is that the items in the "virtual" store are software objects that can be "opened," by "clicking" on the object, as those terms are currently understood by those familiar with use of object-based software applications, to provide information about the item itself. This feature is also very important. With grocery items, for example, shoppers are accustomed to obtaining information about a product from the product's packaging and from the labels carried on shelf edge brackets. The gesture of clicking on an image of an item thus becomes analogous in the present invention to picking up an item and yields the same results,

namely, access to more information about the item. Furthermore, the amount of information can be much greater than that which might be available on the shelf or on the packaging of the product itself.

[0013] The user interface will be designed in such a way that it imitates physically shopping in a store, and the user's computer's mouse will control what the user sees. For example, one can scroll and move in all directions using the mouse. You can zoom out to view more products at the same time, and zoom in to view specific products.

[0014] Arranging for pick-up or delivery of the grocery items is another feature of the present invention. The virtual store, while based on a physical store laid out in a conventional way, may not be the local store. Rather, it may be remote to the shopper. However, the order placed by the shopper who shops the virtual store is filled by the local store for local pickup or delivery.

[0015] These and other features and their advantages will be apparent to those skilled in the art of on-line shopping technology from a careful reading of the Detailed Description of Preferred Embodiment accompanied by the drawings.

BRIEF DESCRIPTION OF THE DRAWINGS

[0016] In the figures,

[0017] Fig. 1 is a top view of a portion of a typical grocery store showing different areas where goods are displayed;

[0018] Fig. 2 is a view of a computer monitor showing virtual items on shelves, according to a preferred embodiment of the present invention;

[0019] Fig. 3 is a view of a computer monitor with a pop up window to enable the shopper to select a product for purchase, according to a preferred embodiment of the present invention;

[0020] Fig. 4 is a view of a computer monitor with a pull down menu to enable the shopper to obtain more product information, according to a preferred embodiment of the present invention;

[0021] Fig. 5 is a flow chart of the virtual shopping process, according to a preferred embodiment of the present invention;

[0022] Fig. 6 is a flow chart of the process for on-line shopping of the virtual store established in accordance with a preferred embodiment of the present invention; and

[0023] Fig. 7 is a flow chart of the process of establishing a virtual store for shopping, according to a preferred embodiment of the present invention.

DETAILED DESCRIPTION OF PREFERRED EMBODIMENTS

[0024] The present invention is a way to shop using the Internet; that it, it is a method for making and for using a website that permits on-line shopping. Although it will be described using a grocery store as a primary example, it will be readily apparent to those skilled in on-line retail sales that almost any store can be used in accordance with the present invention but particularly those that display goods for shoppers in order to help them in making their selections, where seeing the goods and obtaining information about them either from sales people, the packaging of the goods, or other convenient but store-based source enables the shopper to make purchasing decisions.

[0025] Certain aspects of the invention depend on computer technology that is well known such as the tools of graphical user interfaces including pop-up windows, tool bars and pull down menus, computer input tools such as the use of a mouse for pointing and clicking and the use of voice recognition technology, as well as common internet technology such as the use of relational databases, internet browsers, data file compression and streaming video. These are all well known and well understood by those skilled in computer technology and Internet technology. The present invention is a novel and non-obvious combination of these.

[0026] Referring now to the figures, there is illustrated in Fig. 1 a grocery store 10. Grocery store 10 will have check out lanes 12, long narrow shelves 14 on which goods are stacked and displayed, plus bins 16 and coolers 18 for displaying chilled produce for example. Usually like types of goods are grouped together and categories of goods are adjacent to each other in the aisles to make it easier for shoppers to find the types of products they are looking for and to make selections from among various brands. Other types of stores such as hardware stores and clothing stores operate in a similar manner.

[0027] Car dealerships are arranged in similar ways, although on a different scale. Car dealers typically have cars arranged by model in rows on a lot and also a few additional cars available for close inspection inside a show room. Jewelry stores have merchandise displayed in glass display cases. Common to all of these retail stores is the display of goods or representative examples of the goods in a manner so that shoppers can see them.

[0028] Of course, accessing the Internet, while most commonly done using a personal computer, may also be done using devices ranging from a television set with appropriate hardware and cable access to a personal digital assistant with a wireless modem. The word "computer" or phrase "personal computer" when used herein will be understood to include any device that can access and browse the internet, and interact with websites. The word "virtual" as in "virtual store" is intended to mean a navigable image of a store presented on a website, whether the store on which the image is based is a real store or a mock up of a store or even a drawing of a store, and, regardless of the source of the image, one which is created from a digital file adapted for display on a computer monitor.

[0029] On a computer monitor 24, as illustrated in Fig. 2, the virtual store web page will show the user a view 26 of the store and will have tools available in a "tool bar" 28 for use by the shopper in navigating the store. These tools will include those needed to navigate the store and to search for items in the store, and to look closely at the goods available as well as to undergo the checkout process and arrange for physical receipt of the goods purchased. These tools can also include buttons to allow inspection and selection of products in a virtual shopping cart, buttons to allow checking off items from a grocery list, and icons of coupons for discounts on products. Other information may also be available such as information on hours of operation and store location maps.

[0030] The shopper then is given a choice of either target shopping or cruising the store (Fig. 6). In the case in which a shopper wishes to go directly to particular products, target shopping is selected. The shopper selecting target shopping is then presented with a list of categories or may choose to enter search terms in a dialog box. Once a selection is keyed in, the software at the web site host server is programmed to shift the image presented on the shopper's monitor directly and immediately to the area of the shelf in the vicinity of the virtual store where the desired goods are located.

[0031] The shopper can select a "zoom" tool from the tool bar at the top of the web page and look more closely at any item 32 simply by identifying the area of the screen on his monitor where the goods appear to be. When the item desired is found, the shopper zooms in on item 32 itself and selects it by clicking on it with the mouse (Fig. 3).

[0032] Each item 32 is a software object. Moving the mouse curser over the object with the computer mouse and holding it there briefly, preferably a second or less, a small "pop-up" window appears that gives the price. By "clicking" on the object with the computer mouse, the shopper will open a menu 48 of choices that include "purchase" and "information" choices (Figs. 4 and 5, respectively). The "information" choices can include different types of information depending on the product. For example, if the virtual store is a grocery store, the information can include a list of ingredients and nutritional information, perhaps in the form of the image of the portion of the item's package that contains this information. As another example, if the virtual store is a clothing store, the information can include a series of construction detail views and a material description.

[0033] Information may be provided about store promotions or suggestions as to related products. For example, if the product tentatively selected is a brand of cereal, there may be a manufacturer's promotion on that brand in the form of a coupon offering a discount from the stated price. There may be a low-sodium version of the same product or a house brand that is equivalent and available at a lower price. If the product is a nutritious breakfast cereal, a related product on sale may be skim milk. In a more sophisticated form of programming, the server may have information about related products other shoppers or even this particular shopper have bought and can offer reminders. For example, if the server has a record of this particular shopper purchasing plastic wrap approximately every month, it may want to remind the shopper with a prompt: "Do you need plastic wrap today?" An indication that a shopper is interested in a particular product may be used to trigger an assortment of helpful suggestions, cross selling, and up-selling, as well as become part of a database of shopper-specific information.

[0034] A database in operative connection with the controlling software will be used to identify and correlate information corresponding to the goods selected by the shopper using the object that represents the product. The use of databases to store information about software objects is well known to those skilled in internet applications, as is the variety of ways of displaying that information in pull down menus and pop up windows.

[0035] Once the shopper has made a decision to buy, the item is added to a "shopping cart." On-line shopping using "shopping cart" technology is also well known. A shopping cart on an Internet store includes a running, incremental list of

items tentatively selected for purchase by an on-line shopper. Usually this technology is also associated with secure credit card transaction software, also well known to those skilled in internet software applications, to allow a shopper to make payment for the items in a shopping cart that are to be purchased.

[0036] The shopper, having selected item 32, is subjected to an inquiry as to whether he has finished shopping. If not, he is again presented with a list of categories or a search window to use to enter the name or brand of an item. Once entered, the computer will locate the item and the image of the area of the appropriate shelf where that item is will appear on the user's monitor. As each decision to purchase (or not purchase) is made, the user can click on the "enter" or "return" button on his personal computer to go directly to the image of the next item on his list.

[0037] Alternatively, as an option, a shopper can download grocery list software for compiling a grocery list and then upload the list to the web site so that the server can take the shopper through the list seriatim.

[0038] Once the shopper has finished shopping, he is directed to go to the checkout area of the virtual store. This technology is also part of "shopping cart" technology, including the security provisions for purchasing goods on-line and preserving the confidentiality of a credit card transaction. Alternatively, the shopper may have an account with the store that can be debited with the cost of the groceries. A receipt is emailed to the shopper or, alternatively, the shopper can download the receipt to a local computer and print it out or receive an itemized receipt when taking physical receipt of the groceries bought.

[0039] In addition to checking out, the shopper is presented with two choices, in the preferred embodiment, regarding the physical receipt of the groceries. The shopper may elect to have them delivered, in which case, the time and date of delivery must be entered, or the shopper may elect to pick them up, in which case the time and date of pick up must be entered.

[0040] When a shopper prefers to "cruise" the store, the server will allow the shopper to navigate through the aisles of the virtual store at the shopper's pace, using for example, his mouse or the up, down, left and right buttons on his computer, pausing to examine the store's offerings where desired. Navigation through the virtual store means "playing" the digital imaging of the store products at speed in order to create the impression of moving through the store, but pausing or accelerating at will through the digital imaging. Selections when cruising are made in the same way as with targeting

shopping, namely, by zooming in on a particular item and then indicating a tentative selection by moving the curser over the image of the object and clicking. The shopper can switch back and forth from cruising to target shopping at will.

[0041] A shopper may enter a chat room with the store staff to inquire about products. For example, if the shopper is shopping in the meat department, the shopper may wish to inquire about particular cut of meat and the best way to prepare them. "Chatting" with the store butcher enables the consumer to make a more intelligent choice.

[0042] As an alternative example, the shopper could enter a chat room with a representative of one of the products on display. Chat room technology is well known to those skilled in the art of Internet software applications and related technology.

[0043] In an alternative embodiment, the present invention would allow voice chatting real time. In yet an alternative embodiment, the present invention would allow chatting with other customers. The present virtual shopping system and method is achieved in steps, set forth as follows.

[0044] The first step in building the present virtual shopping system is to digitally image the store inventory. Every physical store has one thing in common: aisles (or sections). This fact suggests a logical grouping that shoppers, even those that are not computer savvy, would already be familiar and comfortable with. Therefore, according to the present invention, products are preferably grouped in the same way a physical store would, namely, by aisles.

[0045] After business hours in an actual store, or at any time in a mock up of a real store, using a high resolution digital camera or camcorder mounted at eye level on a tripod and connected to a computer using a high speed data cable, the photographer slowly pans through the aisles of the store. Imaging should be done at a distance and with a lens selected so that the complete display area along an aisle (top to bottom) encompasses the entire screen.

[0046] After imaging the store, the digital feed will be uploaded to a computer having an administrative control panel user interface. The user will then play back the digital images via the user interface and begin to build the database. Using simple "drag and drop" functions, well known to those of ordinary skill in object-based software programming, the user will first mark the outlines of the images of the products as they appear on the images. These outlines become the software object boundaries

that map to individual products, or product groupings, which will allow the on-line shopper to interact with individual, "virtual" products.

[0047] After marking off all product outlines and establishing the image of the product as an object, the user will then use the software to associate the product identification and inventory control as meta data to the product object. In this phase, the user will identify the product metadata, such as: SKU, universal product code (UPC), retail price, sale price, on-hand stock count, detailed descriptions, etc., in connection with specific objects. Using the drag and drop toolbar menu, the user will be able to attach additional product views, three-dimensional data models, and links to external software objects to each product object. For example, a grocery store may wish to have an image of the nutrition information from the package used as meta data, while a clothing boutique may wish to have a three dimensional, interactive data model that the shopper can rotate and zoom in on. In the first example, the image of the nutrition information is made and stored in the database. The location of this image is linked to a phrase such as "nutrition information" on a pull-down menu available by right-clicking on the product object. All of this type of information, in text or graphics format, can be attached to the product objects as metadata.

[0048] Once the metadata have been associated with all product objects, the store owner can then continue building and deploying the site. For example, the website will have a home page. The home page will have a login feature so that previous users do not have to re-key in data regarding name, address, local store, and preferences such as grocery pickup versus home delivery.

[0049] The virtual store software application will compress and optimize the digital imaging to create a binary file which will be deployed to an application server. The application server serves the storefront production to those accessing the web site in either a streamed or downloaded format. If streamed, the application server feeds both the digital imaging and the product metadata. If from a CD or downloaded, the application server serves the metadata. The streamed approach will allow for an instantaneous interaction with the storefront and is therefore preferred for customers who have access to the internet via broadband connection, while the downloadable format will allow for a higher quality picture after downloading data files. In addition, those on slow internet connections may wish to use data CDs instead of downloading data files. Users having access to the internet via a non-broadband connection (i.e. 56

Kbs or less) should use the downloadable format, since the connection will not be fast enough to support streamed video.

[0050] The application server will operate on standard Internet protocols, namely, HTTP/HTTPS and TCP/IP ports 80 and 443, thus not limiting those users accessing the internet from computers connected via proxy servers and firewalls. It uses preferably XML-based web coding for communications between the thick client front end and integration with other third party legacy software (supply chain management, accounting, CRM, etc). Open standards will be used in order to support exchange with third party systems – such as credit card merchant accounts. The desired open standard is SOAP Web Services.

[0051] The application server has two primary purposes. First, it is responsible for serving the storefront binary digital image file (via download or streaming), produced as described above. Second, it contains all the business logic for communicating with both the shopper's thick client front end and the third party legacy systems.

[0052] The thick client front end of the website is a rich graphical user interface having the look and feel of physically being in the store. The main functions of this front end are:

[0053] Browsing – shoppers are able to pick an aisle to browse. They can click on a subsection of a selected aisle in order to zoom in on a detailed view of a product. By "clicking" on the image of the product, the shopper can get more information about the product, such as the pricing, availability, etc. From this level they are able to add the product to their shopping basket and continue shopping.

[0054] Searching - using the product metadata, shoppers are able to search the database for a particular product or type of product using keywords. Searching metadata brings them to the exact section in the correct aisle. They can then zoom in on that product and add it to their virtual basket.

[0055] Purchasing - once the shoppers find the product they are interested in, they can add it to their "shopping baskets" for future checkout. Shoppers will also be able to save their purchases in their baskets if they wish to continue shopping at a later date. This of course means that a record of the products they have identified for purchase will be saved.

[0056] Order Processing - after adding the desired products to the shopping basket, the shoppers can simply "check out" by selecting their preferred payment

method and indicating their preferred method of receipt of the goods (pick-up, delivery, etc). The technology for "shopping baskets" and "checking out" of a virtual store using credit card payment, with and without security provisions, is well known.

[0057] Order Tracking - the rich user interface will allow shoppers to view prior purchases of goods and to track the status of their orders in real time.

[0058] In addition to user interaction with the product browsing feature, the software establishes a convenient and secure shopping experience. Rather than registering and supplying address and payment information for each store visited each time it is visited, the shopper need only enter payment preferences and contact and shipping information once. This data is then stored within the thick client interface and made available for use by that shopper at multiple stores whenever that shopper shops.

[0059] Due to the nature of the thick client user interface (and the absence of the restrictions that are inherent with thin client HTML), the shopping experience from browsing to ordering will be highly interactive, convenient, and secure. Features such as live voice chat customer support, live text chat customer support, live voice chat collaboration with other shoppers, voice activated browsing (in which the shopper speaks the name of the product of interest) and more are all features of the present invention that add to the reality and effectiveness of the shopping experience.

[0060] In use, the shopper accesses the Internet and logs onto the present web site that in the present example is a virtual grocery store. The user logs in, if a current customer, or registers as a new customer. The shopper then downloads or streams the digital images of the virtual store. Next, the shopper selects target shopping or cruising depending on whether the shopper only wants a few specific items or wants to browse the store. The shopper can also prepare a shopping list electronically from the web site software.

[0061] If the shopper elects to target shop, he enters the first item he is seeking into a dialog box and clicks on a "go" button. The image shifts to that portion of the store where that item is depicted. The consumer moves the computer curser over the object to learn the price, left clicks on that item to purchase it, perhaps zooming in on it to better see it, or right clicks for information about it. If the item is what the consumer wanted, he left clicks on the item to add it to a "grocery cart."

[0062] Once all items have been assembled in the shopper's grocery cart, the shopper will proceed to checkout and confirm previous purchasing choices and delivery options.

[0063] The "virtual store" navigated by the shopper may be remotely located and may not be a store available for shoppers to shop; that is, it may be a mockup of a store. When the shopper logs onto the web site and logs in for shopping, the local store will be identified and its current inventory database made available in case the shopper selects an items from the virtual store that is not available at the local store. The shopper will be notified and given the choice of selecting a different item, eliminating the item from the shopping list, or of backordering the item.

[0064] When the final list of purchased products is available, it will be transmitted to fulfillment personnel at the local store who will arrange to have the goods assembled for pickup at the appointed time or for delivery to the address corresponding to the shopper's address.

[0065] Other types of stores suggest other types of information and displays of goods. For example a clothing store can have displays of clothing on simulated three-dimensional models. The simulated models can be selected by the consumer according to the consumer's size, outfitted in the tentatively selected garments and then rotated for three-dimensional viewing. For example, a consumer who wears a size 14 dress can select a simulated model having that size to see how a dress, nominally shown in size 8 would look on a size 14 model in three dimensions.

[0066] As another example, jewelry can be "modeled" on a simulated model for both size and appearance. A tour inside a car can also be provided by car dealerships.

[0067] It will be apparent to those skilled in on-line shopping technology that there are many substitutions and modifications that can be made to the foregoing preferred embodiments without departing from the spirit and scope of the present invention, defined by the appended claim.

WHAT IS CLAIMED IS:

1. A method for making an on-line store, said method comprising the steps of:

providing a store having products displayed in a sequence;

making a digital image of said products as displayed in said sequence in said store;

creating software objects corresponding to said products;

providing a database;

populating said database with data about said products

associating data about said products as metatags with said computer objects of said products;

storing said digital image on a host server;

connecting said database with said host server so that said database can be accessed via said meta tags; and

connecting said host server to a computer network so that users of said computer network can access said digital image of said products.

2. The method as recited in claim 1, wherein said digital image is a video digital image.

3. The method as recited in claim 1, further comprising the steps of:

providing a shopping basket; and

enabling a user to associate said products with said shopping basket for purchase.

4. The method as recited in claim 1, further comprising the step of providing means for a shopper to purchase products corresponding to said computer objects.

5. The method as recited in claim 1, further comprising the step of providing means for a shopper to arrange to take possession of products corresponding to said software objects.

6. The method as recited in claim 1, further comprising the step of providing means for moving from product to product in said sequence of products.

7. The method as recited in claim 1, wherein said creating step further comprises the steps of:

identifying the boundaries of said products; and

creating objects corresponding to said boundaries.

8. An on-line store accessible from a computer network, consisting of:

a database containing product information;

a graphical user interface including a digital image showing a sequence of product images, each product image of said sequence of product images having a boundary corresponding to the physical boundary of said each product image, said boundary defining a software object, said software object being associated with metatags that are linked to product information, said information being stored in said database; and

a host server adapted for storing and delivering said graphical user interface and in operational connection with said database, said host server connected to a computer network so that users accessing said server can view said imaging and obtain product information by clicking on said product images.

9. The on-line store as recited in claim 8, further comprising:

means for enabling a user to identify product images corresponding to products the user wishes to purchase; and

means in operational connection with said host server for providing said products to said user.

10. The on-line store as recited in claim 8, further comprising means carried by said server for answering questions from a user accessing said server.

11. The on-line store as recited in claim 8, wherein said product information contains related product information stored with said product information so that, when said user obtains product information, said user obtains related product information.

12. The on-line store as recited in claim 8, wherein said host server delivers said graphical user interface by downloading to computers used to access said host server.

13. The on-line store as recited in claim 8, wherein said host server delivers said graphical user interface by streaming to computers used to access said host server.

14. The on-line store as recited in claim 8, wherein said digital image depicts said sequence of product images as products corresponding to said product images would be arranged in a physical store.

15. The on-line store as recited in claim 8, wherein said digital image is stored in said host server as a binary file.

16. The on-line store as recited in claim 8, wherein said graphical user interface enables a user accessing said host server to navigate said digital image

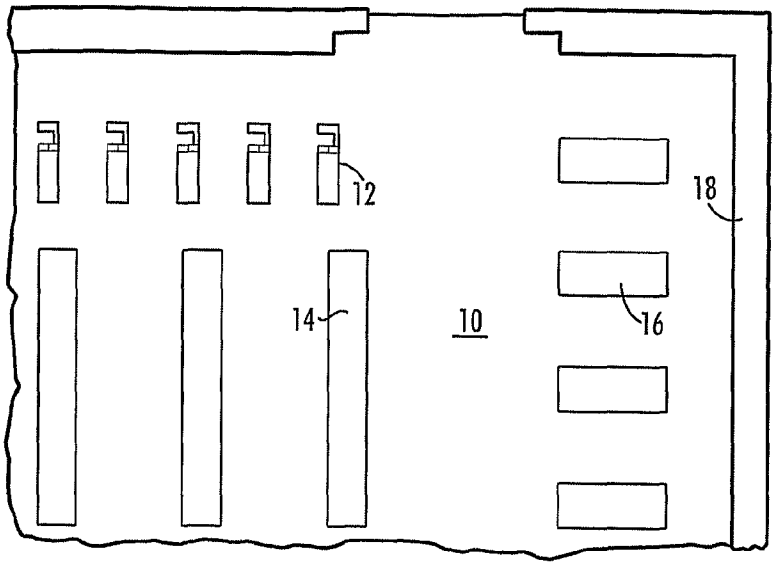

FIG.1

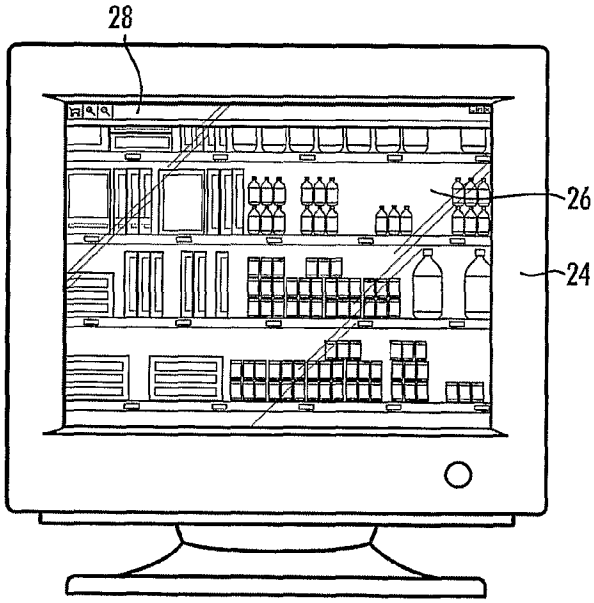

FIG.2

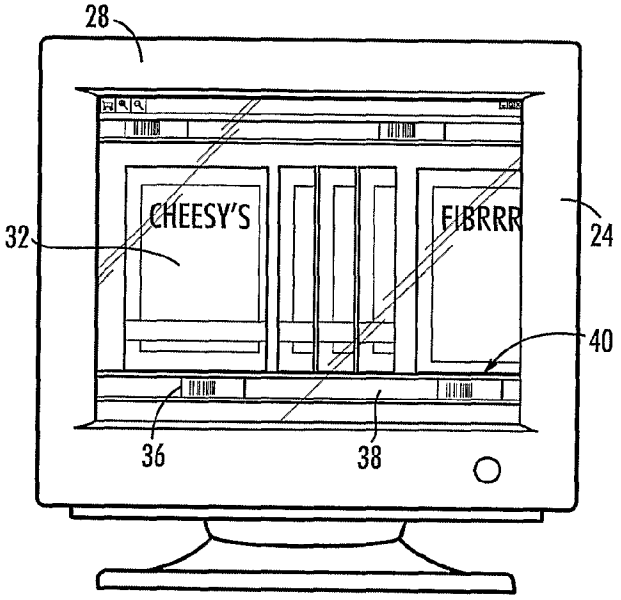

FIG.3

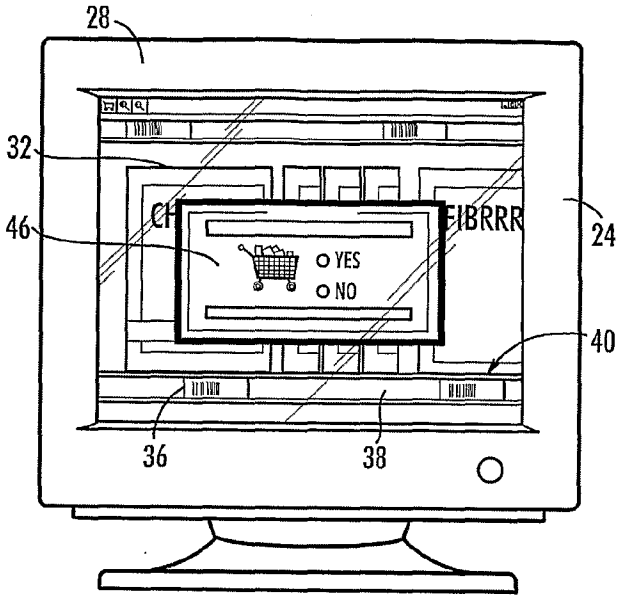
28
32
46
24
40
36
38
YES
NO

FIG.4

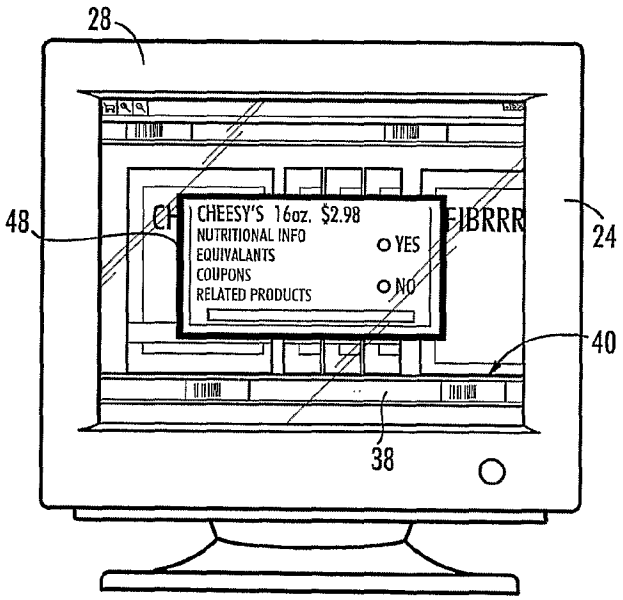
28
48
24
40
38
CHEESY'S 16oz. $2.98
NUTRITIONAL INFO
EQUIVALANTS
COUPONS
RELATED PRODUCTS
YES
NO

FIG.5

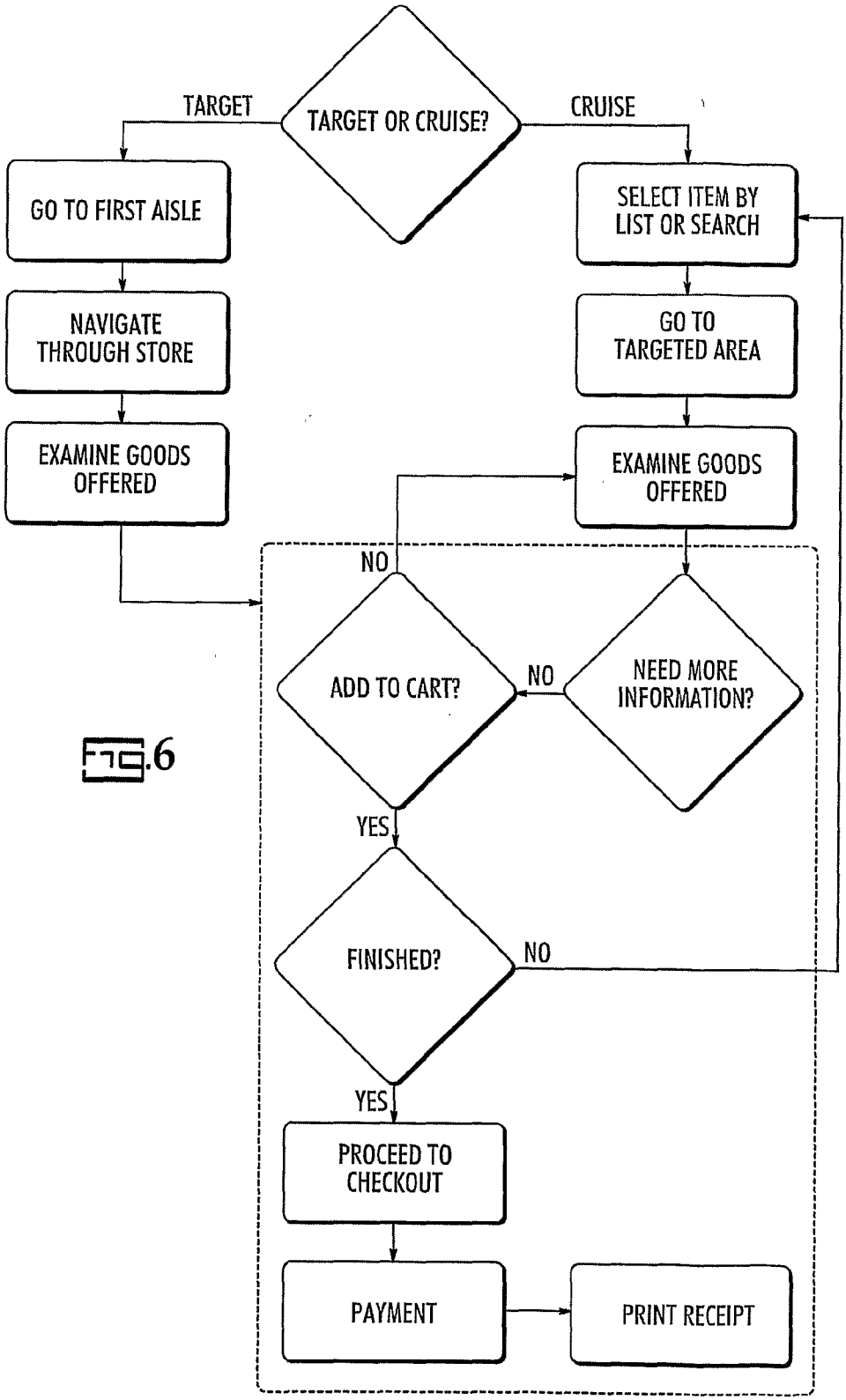
TARGET OR CRUISE?
TARGET
CRUISE
GO TO FIRST AISLE
NAVIGATE THROUGH STORE
EXAMINE GOODS OFFERED
SELECT ITEM BY LIST OR SEARCH
GO TO TARGETED AREA
EXAMINE GOODS OFFERED
NO
ADD TO CART?
NO
NEED MORE INFORMATION?
YES
FINISHED?
NO
YES
PROCEED TO CHECKOUT
PAYMENT
PRINT RECEIPT

FIG.6

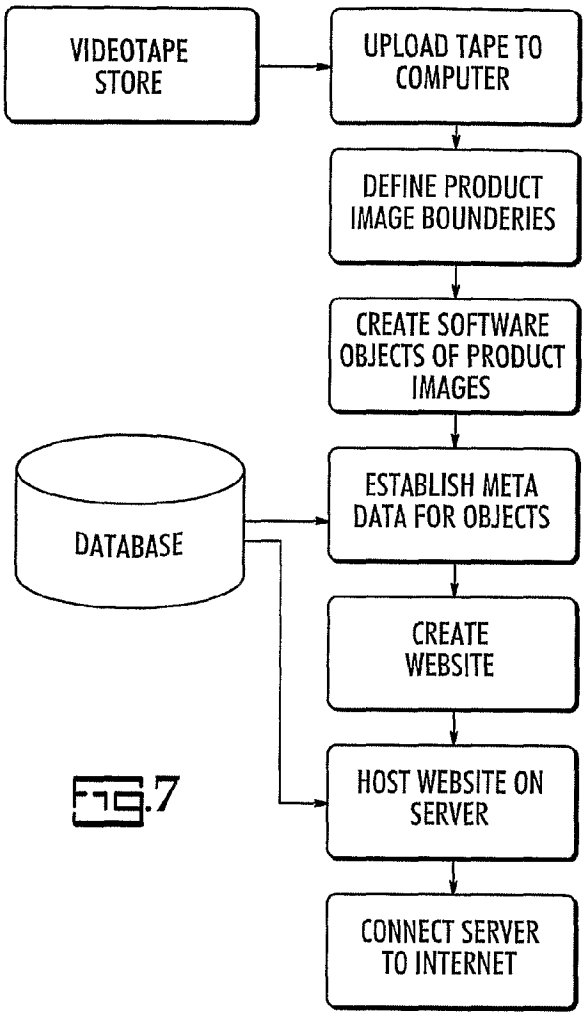
VIDEOTAPE STORE
UPLOAD TAPE TO COMPUTER
DEFINE PRODUCT IMAGE BOUNDERIES
CREATE SOFTWARE OBJECTS OF PRODUCT IMAGES
DATABASE
ESTABLISH META DATA FOR OBJECTS
CREATE WEBSITE
HOST WEBSITE ON SERVER
CONNECT SERVER TO INTERNET

FIG.7

INTERNATIONAL SEARCH REPORT

International application No.
PCT/US03/30417

A. CLASSIFICATION OF SUBJECT MATTER

IPC(7) : G06F 17/60
US CL : 705/26; 707/513, 218

According to International Patent Classification (IPC) or to both national classification and IPC

B. FIELDS SEARCHED

Minimum documentation searched (classification system followed by classification symbols)
U.S. : 705/26; 707/513, 218

Documentation searched other than minimum documentation to the extent that such documents are included in the fields searched

Electronic data base consulted during the international search (name of data base and, where practicable, search terms used)
East

C. DOCUMENTS CONSIDERED TO BE RELEVANT

Category *	Citation of document, with indication, where appropriate, of the relevant passages	Relevant to claim No.
X	US 6,141,666 A (TOBIN) 31 October 2000 (31.10.2001), abstract, col. 2, line 58 - col. 3, line 61.	1-16
X	US 2002/0065851 A1 (WATSON et al.) 30 May 2002 (30.05.2002), abstract, [box 009] through [box 0020].	1-16
X	US 2003/0033378 A1 (NEEDHAM et al.) 13 February 2003 (13.02.2003), abstract, [boxes 0033-0061]	1, 8

☐ Further documents are listed in the continuation of Box C. ☐ See patent family annex.

* Special categories of cited documents:

"A" document defining the general state of the art which is not considered to be of particular relevance

"E" earlier application or patent published on or after the international filing date

"L" document which may throw doubts on priority claim(s) or which is cited to establish the publication date of another citation or other special reason (as specified)

"O" document referring to an oral disclosure, use, exhibition or other means

"P" document published prior to the international filing date but later than the priority date claimed

"T" later document published after the international filing date or priority date and not in conflict with the application but cited to understand the principle or theory underlying the invention

"X" document of particular relevance; the claimed invention cannot be considered novel or cannot be considered to involve an inventive step when the document is taken alone

"Y" document of particular relevance; the claimed invention cannot be considered to involve an inventive step when the document is combined with one or more other such documents, such combination being obvious to a person skilled in the art

"&" document member of the same patent family

Date of the actual completion of the international search
06 March 2004 (06.03.2004)

Date of mailing of the international search report
22 APR 2004

Name and mailing address of the ISA/US
Mail Stop PCT, Attn: ISA/US
Commissioner for Patents
P.O. Box 1450
Alexandria, Virginia 22313-1450
Facsimile No. (703) 305-3230

Authorized officer
Lynda Jasmin
Telephone No. 308-1113

Form PCT/ISA/210 (second sheet) (July 1998)

UNITED STATES PATENT AND TRADEMARK OFFICE

UNITED STATES DEPARTMENT OF COMMERCE
United States Patent and Trademark Office
Address: COMMISSIONER FOR PATENTS
P.O. Box 1450
Alexandria, Virginia 22313-1450
www.uspto.gov

APPLICATION NO.	FILING DATE	FIRST NAMED INVENTOR	ATTORNEY DOCKET NO.	CONFIRMATION NO.
12/372,364	02/17/2009	Yuuichirou Inaba	02910.159320.	9525

5514 7590 06/09/2010
FITZPATRICK CELLA HARPER & SCINTO
1290 Avenue of the Americas
NEW YORK, NY 10104-3800

EXAMINER
CHEN, SOPHIA S

ART UNIT	PAPER NUMBER
2852	

MAIL DATE	DELIVERY MODE
06/09/2010	PAPER

Please find below and/or attached an Office communication concerning this application or proceeding.

The time period for reply, if any, is set in the attached communication.

UNITED STATES PATENT AND TRADEMARK OFFICE

Commissioner for Patents
United States Patent and Trademark Office
P.O. Box 1450
Alexandria, VA 22313-1450
www.uspto.gov

FITZPATRICK CELLA HARPER & SCINTO
1290 Avenue of the Americas
NEW YORK NY 10104-3800

In re Application of	
Yuuichirou INABA	**: DECISION ON REQUEST TO**
Application No.: 12/372,364	**: PARTICIPATE IN THE PATENT**
Filed: 17 Febrary 2009	**: PROSECUTION HIGHWAY**
Attorney Docket No.: 02910.159320.	**: PROGRAM AND PETITION**
For: ELECTROPHOTOGRAPHIC	**: TO MAKE SPECIAL UNDER**
IMAGE FORMING APPARATUS AND	**: 37 CFR 1.102(d)**
CARTRIDGE SUPPORT MEMBER	

This is a decision on the request to participate in the Patent Prosecution Highway (PPH) program and the petition under 37 CFR 1.102(d), filed 12 April 2010, to make the above-identified application special.

The request and petition are **GRANTED**.

A grantable request to participate in the PPH program and petition to make special require:

1. The U.S. application must validly claim priority under 35 U.S.C. 119(a) to one or more applications filed in the JPO, note where the JPO application with similar claims is not the same application from which the U.S. application claims priority that the applicant must identify the relationship between the JPO application with similar claims and the JPO priority application;

2. Applicant must submit a copy of:
   a. The allowable/patentable claim(s) from the JPO application(s) or if a copy of the allowable/patentable claims is available via the Dossier Access System (DAS) applicant may request the USPTO obtain a copy from the DAS, however if the USPTO is unable to obtain a copy from the DAS the applicant will be required to submit a copy;
   b. An English translation of the allowable/patentable claim(s) and
   c. A statement that the English translation is accurate;

3. Applicant must
   a. Ensure all the claims in the U.S. application must sufficiently correspond or be amended to sufficiently correspond to the allowable/patentable claim(s) in the JPO application(s) and
   b. Submit a claims correspondence table in English;

4. Examination of the U.S. application has not begun;

5. Applicant must submit:
    a. Documentation of prior office action:
        i. a copy of the office action(s) just prior to the "Decision to Grant a Patent" from each of the JPO application(s) containing the allowable/patentable claim(s) or
        ii. if the allowable/patentable claims(s) are from a "Notification of Reasons for Refusal" then the Notification of Reasons for Refusal or
        iii. if the JPO application is a first action allowance then no office action from the JPO is necessary should be indicated on the request/petition form;

    Further, if a copy of the documents from a or b above is available via the Dossier Access System (DAS) applicant may request the USPTO obtain a copy from the DAS, however if the USPTO is unable to obtain a copy from the DAS the applicant will be required to submit a copy;
    b. An English language translation of the JPO Office action from (5)(a)(i)-(ii) above
    c. A statement that the English translation is accurate;

6. Applicant must submit:
    a. An IDS listing the documents cited by the JPO examiner in the JPO office action (unless already submitted in this application)
    b. Copies of the documents except U.S. patents or U.S. patent application publications (unless already submitted in this application);

7. The required petition fee under 37 CFR 1.17(h).

The request to participate in the PPH pilot program and petition comply with the above requirements. Accordingly, the above-identified application has been accorded "special" status.

Telephone inquiries concerning this decision should be directed to Lee W. Young at 571-272-4549.

All other inquiries concerning the examination or status of the application is accessible in the PAIR system at http://www.uspto.gov/ebc.index.html.

This application will be forwarded to the examiner for action on the merits commensurate with this decision once this application's formality reviews have been completed.

Lee W. Young
TQAS
Technology Center 2800 – Semiconductors
Electrical & Optical Systems & Components

UNITED STATES PATENT AND TRADEMARK OFFICE

UNITED STATES DEPARTMENT OF COMMERCE
United States Patent and Trademark Office
Address: COMMISSIONER FOR PATENTS
P.O. Box 1450
Alexandria, Virginia 22313-1450
www.uspto.gov

APPLICATION NO.	FILING DATE	FIRST NAMED INVENTOR	ATTORNEY DOCKET NO.	CONFIRMATION NO.
12/372,389	02/17/2009	Norbert Althoff	ALTHOFF=11	9567

7590 08/28/2009
BROWDY AND NEIMARK, P.L.L.C.
624 NINTH STREET, NW
SUITE 300
WASHINGTON, DC 20001-5303

EXAMINER
MANSEN, MICHAEL R

ART UNIT	PAPER NUMBER
3644	

MAIL DATE	DELIVERY MODE
08/28/2009	PAPER

DECISION DISMISSING PETITION UNDER 37 CFR 1.138(c)

The declaration of express abandonment will not be recognized

This is in response to the petition under 37 CFR 1.138(c), for express abandonment to avoid publication of the above-identified application.

The petition is dismissed.

The express abandonment will **not** be recognized for the reason(s) indicated below:

1. ☑ The petition under 37 CFR 1.138(c) was not filed in sufficient time to permit the appropriate officials to recognize the abandonment and remove the application from the publication process.
2. ☐ The petition was not signed by a party authorized by 37 CFR 1.33(b)(1), (3) or (4).
3. ☐ The Application was published in compliance with 35 U.S.C. 122(b), and it is available on the USPTO web site at http://www.uspto.gov/patft/index.html.
4. ☐ Petition fee was not paid.

The application **has/will be published** as scheduled.

Telephone inquiries should be directed to the Office of Data Management at (571) 272-4200.

Valetus Buchanan

Patent Publication Branch
Office of Data Management

FORM PET650D (Rev. 08/07)

UNITED STATES PATENT AND TRADEMARK OFFICE

UNITED STATES DEPARTMENT OF COMMERCE
United States Patent and Trademark Office
Address: COMMISSIONER FOR PATENTS
P.O. Box 1450
Alexandria, Virginia 22313-1450
www.uspto.gov

APPLICATION NO.	FILING DATE	FIRST NAMED INVENTOR	ATTORNEY DOCKET NO.	CONFIRMATION NO.
12/372,440	02/17/2009	Hiroshi CHIKUMA	CK-US085308	9647

7590 01/27/2010
GLOBAL IP COUNSELORS, LLP
1233 20TH STREET, NW, SUITE 700
WASHINGTON, DC 20036-2680

EXAMINER
TOLAN, EDWARD THOMAS

ART UNIT	PAPER NUMBER
3725	

MAIL DATE	DELIVERY MODE
01/27/2010	PAPER

DECISION GRANTING PETITION UNDER 37 CFR 1.138(d)

The declaration of express abandonment is recognized

This is in response to the petition under 37 CFR 1.138(d), requesting for a refund of any previously paid search fee and excess claims fee in the above-identified application.

The petition is granted.

The express abandonment is recognized. Any previously paid search fee and excess claims fee are hereby refunded.

Telephone inquiries should be directed to the Office of Data Management at (571) 272-4200.

Nioni Farmer

Patent Publication Branch
Office of Data Management

Adjustment date: 01/28/2010 NFARMER
02/18/2009 INTEFSW 00003201 501836 12372440
02 FC:1111 540.00 CR

FORM PET651G (Rev. 08/07)

UNITED STATES PATENT AND TRADEMARK OFFICE

UNITED STATES DEPARTMENT OF COMMERCE
United States Patent and Trademark Office
Address: COMMISSIONER FOR PATENTS
P.O. Box 1450
Alexandria, Virginia 22313-1450
www.uspto.gov

APPLICATION NO.	FILING DATE	FIRST NAMED INVENTOR	ATTORNEY DOCKET NO.	CONFIRMATION NO.
12/372,442	02/17/2009	Yoshinori Inoue	1924.83507	9649

7590 06/17/2010
GREER, BURNS & CRAIN
300 S WACKER DR
25TH FLOOR
CHICAGO, IL 60606

EXAMINER
TSAI, HENRY

ART UNIT	PAPER NUMBER
2184	

MAIL DATE	DELIVERY MODE
06/17/2010	PAPER

DECISION GRANTING PETITION UNDER 37 CFR 1.138(d)

The declaration of express abandonment is recognized

This is in response to the petition under 37 CFR 1.138(d), requesting for a refund of any previously paid search fee and excess claims fee in the above-identified application.

The petition is granted.

The express abandonment is recognized. Any previously paid search fee and excess claims fee are hereby refunded.

Telephone inquiries should be directed to the Office of Data Management at (571) 272-4200.

Patent Publication Branch
Office of Data Management

02 FC:1138 540.00 CR

FORM PET651G (Rev. 08/07)

UNITED STATES PATENT AND TRADEMARK OFFICE

UNITED STATES DEPARTMENT OF COMMERCE
United States Patent and Trademark Office
Address: COMMISSIONER FOR PATENTS
P.O. Box 1450
Alexandria, Virginia 22313-1450
www.uspto.gov

APPLICATION NO.	FILING DATE	FIRST NAMED INVENTOR	ATTORNEY DOCKET NO.	CONFIRMATION NO.
12/372,468	02/17/2009	Takeshi Hongo	SUTOSH.316AUS	9695

7590 02/24/2010
KNOBBE MARTENS OLSON & BEAR LLP
2040 MAIN STREET
FOURTEENTH FLOOR
IRVINE, CA 92614

EXAMINER
DATSKOVSKIY, MICHAIL V

ART UNIT	PAPER NUMBER
2835	

NOTIFICATION DATE	DELIVERY MODE
02/24/2010	ELECTRONIC

DECISION GRANTING PETITION UNDER 37 CFR 1.138(d)

The declaration of express abandonment is recognized

This is in response to the petition under 37 CFR 1.138(d), requesting for a refund of any previously paid search fee and excess claims fee in the above-identified application.

The petition is granted.

The express abandonment is recognized. Any previously paid search fee and excess claims fee are hereby refunded.

Telephone inquiries should be directed to the Office of Data Management at (571) 272-4200.

Patent Publication Branch
Office of Data Management

Refund Ref:
02/24/2010 [illegible]

Credit Card Refund Total: $540.00

Master CC XXXXXXXXXXXX[illegible]

Adjustment date: 02/24/2010 NFARMER
02/18/2009 INTEFSW 00003514 12372468
02 FC:1111 -540.00 CP

FORM PET651G (Rev. 08/07)

UNITED STATES PATENT AND TRADEMARK OFFICE

UNITED STATES DEPARTMENT OF COMMERCE
United States Patent and Trademark Office
Address: COMMISSIONER FOR PATENTS
P.O. Box 1450
Alexandria, Virginia 22313-1450
www.uspto.gov

APPLICATION NO.	FILING DATE	FIRST NAMED INVENTOR	ATTORNEY DOCKET NO.	CONFIRMATION NO.
12/372,480	02/17/2009	Akio Ikeda	0229-1054PUS1	9708

2292 7590 07/09/2010
BIRCH STEWART KOLASCH & BIRCH
PO BOX 747
FALLS CHURCH, VA 22040-0747

EXAMINER

ART UNIT	PAPER NUMBER
1791	

NOTIFICATION DATE	DELIVERY MODE
07/09/2010	ELECTRONIC

Please find below and/or attached an Office communication concerning this application or proceeding.

The time period for reply, if any, is set in the attached communication.

Notice of the Office communication was sent electronically on above-indicated "Notification Date" to the following e-mail address(es):

mailroom@bskb.com

UNITED STATES PATENT AND TRADEMARK OFFICE

Commissioner for Patents
United States Patent and Trademark Office
P.O. Box 1450
Alexandria, VA 22313-1450
www.uspto.gov

July 8, 2010 CST

In re application of Akio Ikeda Serial No. 12/372,480 Filed: February 17, 2009 For: STUDLESS TIRE	: : : : : :	DECISION ON REQUEST TO PARTICIPATE IN PATENT PROSECUTION HIGHWAY PROGRAM AND PETITION TO MAKE SPECIAL UNDER 37 CFR 1.102(d)

This is a decision on the request to participate in the Patent Prosecution Highway (PPH) program filed May 6, 2010.

The request and petition are **DISMISSED**.

A grantable request to participate in the PPH program and petition to make special require:

(1) The U.S. application must validly claim priority under 35 U.S.C. 119(a) to one or more applications filed in the JPO, note where the JPO application with similar claims is not the same application from which the U.S. application claims priority that the applicant must identify the relationship between the JPO application with similar claims and the JPO priority application;

(2) Applicant must submit a copy of:
   a. The allowable/patentable claim(s) from the JPO application(s) or if a copy of the allowable/patentable claims is available via the Dossier Access System (DAS) applicant may request the USPTO to obtain a copy from DAS; however, if the USPTO is unable to obtain a copy from the DAS, the applicant will be required to submit a copy;
   b. An English translation of the allowable/ patentable claim(s), if applicable; and
   c. A statement that the English translation is accurate, if applicable;

(3) Applicant must:
   a. Ensure all the claims in the U.S. application must sufficiently correspond or be amended to sufficiently correspond to the allowable/patentable claim(s) in the JPO application(s); and
   b. Submit a claims correspondence table in English;

(4) Examination of the U.S. application has not begun;

(5) Applicant must submit:

a. Documentation of prior office action:
   i. a copy of the office action(s) just prior to the "Decision to Grant a Patent" from each of the JPO application(s) containing the allowable/patentable claims(s) or
   ii. if the allowable/patentable claim(s) are from "Notification of Reasons for Refusal" then the Notification of Reasons for Refusal or
   iii. if the JPO application is a first action allowance then no office action from the JPO is necessary should be indicated on the request/petition form:

   Further, if a copy of the documents from (i) or (ii) is available via the Dossier Access System (DAS), applicant may request the USPO obtain a copy from the DAS; however, if the USPTO is unable to obtain a copy of the DAS, the applicant will be required to submit a copy;
b. An English language translation of the JPO Office action from (5)(a)(i)-(ii) above if applicable; and
c. A statement that the English translation is accurate;

(6) Applicant must submit:

a. An IDS listing the documents cited by the JPO examiner in the JPO office action (unless already submitted in this application)
b. Copies of documents except U.S. patents or U.S. patent application publications (unless already submitted in this application); and

(7) The required petition fee under 37 CFR 1.17(h).

The request to participate in the PPH program and petition fail because:

(3) All of the claims in the U.S. application must sufficiently correspond or be amended to sufficiently correspond to the allowable/patentable claim(s) in the JPO application(s).

Claim 1 of the present application does not appear to sufficiently correspond to allowed claim 1 of the JPO application. Specifically, claim 1 of the present application recites "the middle region is defined between the groove center line of the inner groove", whereas claim 1 of the JPO application recites "the middle region is defined between the groove center line of said inner longitudinal groove". Also, claim 1 of the present application recites "the shoulder region is defined between the widthwise center line" whereas claim 1 of the JPO application recites "the shoulder region is defined between the groove center line".

Additionally, the phrase "and arranged at intervals in the circumferential direction of the tire", while present in claim 4 of the JPO application is not present in claim 1 of the present application.

Applicant is given a time period of **ONE MONTH OR THIRTY DAYS**, whichever is longer, from the mailing date of this decision to correct the deficiencies. **NO**

EXTENSION OF TIME UNDER 37 CFR 1.136 IS PERMITTED. If the deficiencies are not corrected within the time period given, the application with await action in its regular turn.

Any inquiry regarding this decision should be directed to Christine Tierney, Quality Assurance Specialist, at (571) 272-1055.

All other inquiries concerning the examination or status of the application is accessible in the PAIR system at http://www.uspto.gov/ebc/index.html.

/Christine Tierney/

Christine Tierney
Quality Assurance Specialist
Technology Center 1700

UNITED STATES PATENT AND TRADEMARK OFFICE

Commissioner for Patents
United States Patent and Trademark Office
P.O. Box 1450
Alexandria, VA 22313-1450
www.uspto.gov

CHRISTOPHER W.CORBETT
DUNLAP, CODDING & ROGERS, P.C.
P.O. BOX 16370
OKLAHOMA CITY OK 73113

COPY MAILED

JAN 04 2010

In re Application of Donald E. WEDER Application No. 12/372,515 Filed: February 17, 2009 Attorney Docket No. **8404.484**	: : : : :	DECISION ON PETITION

This is a decision on the petition under the unintentional provisions of 37 CFR 1.137(b), filed November 09, 2009, to revive the above-identified application.

The petition is **GRANTED**.

The application became abandoned for failure to reply in a timely manner to the non-final Office action mailed, May 06, 2009, which set a shortened statutory period for reply of three (3) months. No extensions of time under the provisions of 37 CFR 1.136(a) were obtained. Accordingly, the application became abandoned on August 07, 2009.

The petition satisfies the requirements of 37 CFR 1.137(b) in that petitioner has supplied (1) the reply in the form of a continuing application under 37 CFR 1.53(b); (2) the petition fee of $1640; and (3) a proper statement of unintentional delay.

This application is being revived solely for purposes of continuity. As continuity has been established by this decision, the application is again abandoned in favor of continuing application No. 12/614873.

Telephone inquiries concerning this decision should be directed to Tredelle Jackson at (571) 272-2783.

Ramesh Krishnamurthy

Ramesh Krishnamurthy
Petitions Examiner
Office of Petitions

UNITED STATES PATENT AND TRADEMARK OFFICE

COMMISSIONER FOR PATENTS
UNITED STATES PATENT AND TRADEMARK OFFICE
P.O. BOX 1450
ALEXANDRIA, VA 22313-1450
www.uspto.gov

FISH & RICHARDSON P.C.
P.O. BOX 1022
MINNEAPOLIS MN 55440-1022

COPY MAILED
JUL 21 2009
OFFICE OF PETITIONS

In re Application of
Botes
Application No. 12/372,525
Deposited: February 17, 2009
Attorney Docket No. 18990-0011002

ON PETITION

This is in response to the "PETITION UNDER 37 C.F.R. 1.57(a)," filed April 15, 2009, requesting that the above-referenced application be accorded a filing date of February 17, 2009. This petition is being treated pursuant to 37 CFR 1.53(e)(2)[1].

Application papers in the above-identified application were deposited on February 17, 2009. However, on March 23, 2009, the Office of Patent Application Processing mailed applicants a "Notice of Incomplete Nonprovisional Application," notifying applicants that the application papers had not been accorded a filing date because the application was deposited without drawings. In response, applicants timely filed this petition. Applicants request that the application be amended to include the inadvertently omitted drawings on the basis that the application as filed contained a prior benefit claim under 37 CFR 1.55 or 1.78.

Petitioner's arguments and evidence have been considered. However, a review of the application confirms that, as filed, the application contained at least one process claim. MPEP 601.01(f) provides that:

> It has been USPTO practice to treat an application that contains at least one process or method claim as an application for which a drawing is not necessary for an understanding of the invention under 35 U.S.C. 113 (first sentence).

Thus, pursuant to § 601.01(f), a drawing is not considered essential for a filing date. The instant application is entitled to a filing date without drawings present in the application.

Accordingly, the Office should have granted the application a filing date and mailed a Notice of Omitted Items instead of a Notice of Incomplete Nonprovisional Application. As stated in MPEP 601.01(g) under the section entitled, "Application Entitled to a Filing Date," applicant may submit an amendment to include the inadvertently omitted portion of the drawing(s) pursuant to 37 CFR 1.57(a):

---

[1] Any request for review of a notification pursuant to paragraph (e)(1) of this section, or a notification that the original application papers lack a portion of the specification or drawing(s), must be by way of a petition pursuant to this paragraph accompanied by the fee set forth in § 1.17(f). In the absence of a timely (§ 1.181(f)) petition pursuant to this paragraph, the filing date of an application in which the applicant was notified of a filing error pursuant to paragraph (e)(1) of this section will be the date the filing error is corrected.

> [i]f an application was filed on or after September 21, 2004, and contains a claim under 37 CFR 1.55 for priority of a prior-filed foreign application, or a claim under 37 CFR 1.78 for the benefit of a prior-filed provisional, nonprovisional, or international application that was present on the filing date of the application, and the omitted portion of the drawing(s) was inadvertently omitted from the application and is completely contained in the prior-filed application[.]

Please note that no petition is required and that the amendment must comply with 37 CFR 1.57(a) and 37 CFR 1.121. See MPEP § 201.17. Any amendment to include the inadvertently omitted drawing(s) will be considered by the examiner.

To the extent the instant petition requests a filing date of February 17, 2009 with no drawings present in the application, the petition is **GRANTED**.

Given the basis for granting this petition, no petition fee is necessary. Petitioner may request a refund of the $400.00 petition fee submitted herewith by writing to the Finance Office, Refund Section. A copy of this decision should accompany any request for refund.

Pursuant to this decision, the application will be referred to Office of Patent Application Processing for:

- **correction of the filing date to February 17, 2009**;
- **for indication in Office records, as appropriate, that "0" sheets of drawings were present on filing** and
- **for issuance of a filing receipt.**

Entry of the amendment filed April 15, 2009 will be determined by the examiner.

Telephone inquiries concerning this matter may be directed to Alesia M. Brown, Petitions Attorney, at (571) 272-3205.

Anthony Knight
Supervisor
Office of Petitions

UNITED STATES PATENT AND TRADEMARK OFFICE

Commissioner for Patents
United States Patent and Trademark Office
P.O. Box 1450
Alexandria, VA 22313-1450
www.uspto.gov

COPY MAILED

NOV 27 2009

OFFICE OF PETITIONS

KNOBBE MARTENS OLSON & BEAR LLP
2040 MAIN STREET
FOURTEENTH FLOOR
IRVINE CA 92614

In re Application of	:	
Bell, et al.	:	
Application No. 12/372,674	:	DECISION REFUSING STATUS
Filed: February 17, 2009	:	UNDER 37 CFR 1.47(a)
Attorney Docket No. KM2326.013A	:	

This is in response to the petition under 37 CFR 1.47(a), filed October 2, 2009.

The petition under 37 CFR 1.47(a) is **DISMISSED**.

Rule 47 applicant is given TWO MONTHS from the mailing date of this decision to reply, correcting the below-noted deficiencies. Any reply should be entitled "Request for Reconsideration of Petition Under 37 CFR 1.47(a)," and should only address the deficiencies noted below, except that the reply may include an oath or declaration executed by the non-signing inventor. **Failure to respond will result in abandonment of the application.** Any extensions of time will be governed by 37 CFR 1.136(a).

A grantable petition under 37 CFR 1.47(a) requires: (1) proof that the non-signing inventor cannot be reached after diligent effort or refuses to sign the oath or declaration after having been presented with the application papers (specification, claims, drawings, oath or declaration); (2) an acceptable oath or

declaration in compliance with 37 CFR 1.63; (3) the petition fee; and (4) a statement of the last known address of the non-signing inventor. Rule 47 applicant has not met requirement (2) above.

As to requirement (2), petitioner has failed to submit an oath or declaration in compliance with 37 CFR 1.63. The declaration does not contain the citizenship of inventor Chin as required by 37 CFR 1.63(a)(3). In addition, the declaration does not list his mailing address as required by 37 CFR 1.63(c)(1).

Further correspondence with respect to this matter should be addressed as follows:

By mail: Mail Stop Petitions
Commissioner for Patents
P.O. Box 1450
Alexandria VA 22313-1450

By FAX: (571)273-8300
Attn: Office of Petitions

Telephone inquiries related to this decision may be directed to the undersigned at (571)272-3207.

Cliff Congo
Petitions Attorney
Office of Petitions

UNITED STATES PATENT AND TRADEMARK OFFICE

Commissioner for Patents
United States Patent and Trademark Office
P.O. Box 1450
Alexandria, VA 22313-1450
www.uspto.gov

KNOBBE MARTENS OLSON & BEAR LLP
2040 MAIN STREET
FOURTEENTH FLOOR
IRVINE CA 92614

MAILED

FEB 19 2010

OFFICE OF PETITIONS

In re Application of	:	
Bell, et al.	:	
Application No. 12/372,674	:	DECISION ACCORDING STATUS
Filed: February 17, 2009	:	UNDER 37 CFR 1.47(a)
Attorney Docket No. KM2326.013A	:	

This is in response to the renewed petition under 37 CFR 1.47(a), filed January 13, 2010.

The petition under 37 CFR 1.47(a) is **GRANTED**.

Applicant filed a petition under 37 CFR 1.47(a) on October 2, 2009. However, the petition was dismissed in a decision mailed on November 27, 2009. The petition was dismissed because the 37 CFR 1.63 declaration submitted did not contain the citizenship of inventor Chin, as required by §1.63(a)(3), or his mailing address, as required by §1.63(c)(1).

The petition and declaration have been reviewed and determined to be in compliance with 37 C.F.R. § 1.47(a).

The application is hereby accorded Rule 47 status.

As provided in 37 C.F.R. § 1.47(c), the Office will provide notice of this application's filing to the non-signing inventors at the last known address provided in the petition. Notice will also be provided in the Official Gazette.

The application is being forwarded to Group Art Unit 2621 for docketing and examination in due course.

Telephone inquiries related to this decision may be directed to the undersigned at (571)272-3207.

Cliff Congo
Petitions Attorney
Office of Petitions

UNITED STATES PATENT AND TRADEMARK OFFICE

Commissioner for Patents
United States Patent and Trademark Office
P.O. Box 1450
Alexandria, VA 22313-1450
www.uspto.gov

MAILED

FEB 19 2010

OFFICE OF PETITIONS

MATTHEW BELL
4245 LOS PALOS AVE
PALO ALTO CA 94306

MAILED

FEB 19 2010

OFFICE OF PETITIONS

In re Application of :
Bell, et al. :
Application No. 12/372,674 :
Filed: February 17, 2009 : LETTER
Title: Self-Contained 3D Vision System:
Utilizing Stereo Camera and Patterned
Illuminator

Dear Mr. Bell:

You are named as an inventor in the above-identified United States patent application filed under the provisions of 35 USC 116 (United States Code) and 37 CFR 1.47(a), Rules of Practice in Patent Cases. Should a patent be granted on the application you will be designated therein as joint inventor.

As a named inventor you are entitled to inspect any paper in the file wrapper of the application, order copies of all or any part thereof (at a prepaid cost per 37 CFR 1.19) or make your position of record in the application. Alternatively, you may arrange to do any of the preceding through a registered patent attorney or agent presenting written authorization from you. If you care to join the application, agent of record would presumably assist you. Joining in the application would entail the filing of an appropriate oath or declaration by you pursuant to 37 CFR 1.63.

Telephone inquiries regarding this communication should be directed to Petitions Attorney Cliff Congo at (571)272-3207. Requests for information regarding your application should be directed to the File Information Unit at (703) 308-2733. Information regarding how to pay for and order a copy of the application, or a specific paper in the application, should be directed to the Certification Division at (703) 308-9726 or 1-800-972-6382 (outside the Washington D.C. area).

Cliff Congo
Petitions Attorney
Office of Petitions

UNITED STATES PATENT AND TRADEMARK OFFICE

Commissioner for Patents
United States Patent and Trademark Office
P.O. Box 1450
Alexandria, VA 22313-1450
www.uspto.gov

MAILED

FEB 19 2010

OFFICE OF PETITIONS

RAYMOND CHIN
3358 VANDERBILT WAY
SANTA CLARA CA 95051

In re Application of :
Bell, et al. :
Application No. 12/372,674 :
Filed: February 17, 2009 : LETTER
Title: Self-Contained 3D Vision System:
Utilizing Stereo Camera and Patterned
Illuminator

Dear Mr. Chin:

You are named as an inventor in the above-identified United States patent application filed under the provisions of 35 USC 116 (United States Code) and 37 CFR 1.47(a), Rules of Practice in Patent Cases. Should a patent be granted on the application you will be designated therein as joint inventor.

As a named inventor you are entitled to inspect any paper in the file wrapper of the application, order copies of all or any part thereof (at a prepaid cost per 37 CFR 1.19) or make your position of record in the application. Alternatively, you may arrange to do any of the preceding through a registered patent attorney or agent presenting written authorization from you. If you care to join the application, agent of record would presumably assist you. Joining in the application would entail the filing of an appropriate oath or declaration by you pursuant to 37 CFR 1.63.

Telephone inquiries regarding this communication should be directed to Petitions Attorney Cliff Congo at (571)272-3207. Requests for information regarding your application should be directed to the File Information Unit at (703) 308-2733. Information regarding how to pay for and order a copy of the application, or a specific paper in the application, should be directed to the Certification Division at (703) 308-9726 or 1-800-972-6382 (outside the Washington D.C. area).

Cliff Congo
Petitions Attorney
Office of Petitions

UNITED STATES PATENT AND TRADEMARK OFFICE

Commissioner for Patents
United States Patent and Trademark Office
P.O. Box 1450
Alexandria, VA 22313-1450
www.uspto.gov

MERCHANT & GOULD
SCIENTIFIC ATLANTA, A CISCO COMPANY
P.O. BOX 2903
MINNEAPOLIS MN 55402-0903

MAILED

JUL 22 2010

OFFICE OF PETITIONS

In re Application of	:	
Dean F. Jerding, et al.	:	
Application No. 12/372,894	:	DECISION GRANTING PETITION
Filed: February 18, 2009	:	UNDER 37 CFR 1.313(c)(2)
Attorney Docket No.	:	
60374.0073USD1/CPOL968821		

This is a decision on the petition under 37 CFR 1.313(c)(2), filed, July 21, 2010 to withdraw the above-identified application from issue after payment of the issue fee.

The petition is **GRANTED**.

The above-identified application is withdrawn from issue for consideration of a submission under 37 CFR 1.114 (request for continued examination). *See* 37 CFR 1.313(c)(2).

Petitioner is advised that the issue fee paid on June 30, 2010 cannot be refunded. If, however, this application is again allowed, petitioner may request that it be applied towards the issue fee required by the new Notice of Allowance.[1]

Telephone inquiries should be directed to Terri Johnson at (571) 272-2991.

This application is being referred to Technology Center AU 2421for processing of the request for continued examination under 37 CFR 1.114 and for consideration of the concurrently filed information disclosure statement.

T. Johnson

Terri Johnson
Petitions Examiner
Office of Petitions

---

[1] *The request to apply the issue fee to the new Notice may be satisfied by completing and returning the new Part B – Fee(s) Transmittal Form (along with any balance due at the time of submission). Petitioner is advised that the Issue Fee Transmittal Form* ***must*** *be completed and timely submitted to avoid abandonment of the application.*

UNITED STATES PATENT AND TRADEMARK OFFICE

UNITED STATES DEPARTMENT OF COMMERCE
United States Patent and Trademark Office
Address: COMMISSIONER FOR PATENTS
P.O. Box 1450
Alexandria, Virginia 22313-1450
www.uspto.gov

APPLICATION NO.	FILING DATE	FIRST NAMED INVENTOR	ATTORNEY DOCKET NO.	CONFIRMATION NO.
12/372,898	02/18/2009	Dean F. Jerding	60374.0073USD2/A-12698	1499

7590 12/30/2009
MERCHANT & GOULD
SCIENTIFIC ATLANTA, A CISCO COMPANY
P.O. BOX 2903
MINNEAPOLIS, MN 55402-0903

EXAMINER
LONSBERRY, HUNTER B

ART UNIT	PAPER NUMBER
2421	

MAIL DATE	DELIVERY MODE
12/30/2009	PAPER

DECISION GRANTING PETITION UNDER 37 CFR 1.138(d)

The declaration of express abandonment is recognized

This is in response to the petition under 37 CFR 1.138(d), requesting for a refund of any previously paid search fee and excess claims fee in the above-identified application.

The petition is granted.

The express abandonment is recognized. Any previously paid search fee and excess claims fee are hereby refunded.

Telephone inquiries should be directed to the Office of Data Management at (571) 272-4200.

Patent Publication Branch
Office of Data Management

Adjustment date: 12/31/2009 NFARMER
02/27/2009 VVAN11 00000022 190761 12372898
02 FC:1111 548.00 CR

FORM PET651G (Rev. 08/07)

UNITED STATES PATENT AND TRADEMARK OFFICE

UNITED STATES DEPARTMENT OF COMMERCE
United States Patent and Trademark Office
Address: COMMISSIONER FOR PATENTS
P.O. Box 1450
Alexandria, Virginia 22313-1450
www.uspto.gov

APPLICATION NO.	FILING DATE	FIRST NAMED INVENTOR	ATTORNEY DOCKET NO.	CONFIRMATION NO.
12/372,905	02/18/2009	Dean F. Jerding	60374.0073USD3/A-12699	1511

7590 12/30/2009

MERCHANT & GOULD
SCIENTIFIC ATLANTA, A CISCO COMPANY
P.O. BOX 2903
MINNEAPOLIS, MN 55402-0903

EXAMINER
LONSBERRY, HUNTER B

ART UNIT	PAPER NUMBER
2421	

MAIL DATE	DELIVERY MODE
12/30/2009	PAPER

DECISION GRANTING PETITION UNDER 37 CFR 1.138(d)

The declaration of express abandonment is recognized

This is in response to the petition under 37 CFR 1.138(d), requesting for a refund of any previously paid search fee and excess claims fee in the above-identified application.

The petition is granted.

The express abandonment is recognized. Any previously paid search fee and excess claims fee are hereby refunded.

Telephone inquiries should be directed to the Office of Data Management at (571) 272-4200.

Nioni Farmer

Patent Publication Branch
Office of Data Management

Adjustment date: 12/31/2009 NFARMER
12/27/2009 VVAN11 00000316 190761 12372905
02 FC:1111 540.00 CR

FORM PET651G (Rev. 08/07)

UNITED STATES PATENT AND TRADEMARK OFFICE

UNITED STATES DEPARTMENT OF COMMERCE
United States Patent and Trademark Office
Address: COMMISSIONER FOR PATENTS
P.O. Box 1450
Alexandria, Virginia 22313-1450
www.uspto.gov

APPLICATION NO.	FILING DATE	FIRST NAMED INVENTOR	ATTORNEY DOCKET NO.	CONFIRMATION NO.
12/372,979	02/18/2009	Arturo A. Rodriguez	60374.0053USD2	1656

7590 12/29/2009

MERCHANT & GOULD
SCIENTIFIC ATLANTA, A CISCO COMPANY
P.O. BOX 2903
MINNEAPOLIS, MN 55402-0903

EXAMINER
PARRA, OMAR S

ART UNIT	PAPER NUMBER
2421	

MAIL DATE	DELIVERY MODE
12/29/2009	PAPER

DECISION GRANTING PETITION UNDER 37 CFR 1.138(d)

The declaration of express abandonment is recognized

This is in response to the petition under 37 CFR 1.138(d), requesting for a refund of any previously paid search fee and excess claims fee in the above-identified application.

The petition is granted.

The express abandonment is recognized. Any previously paid search fee and excess claims fee are hereby refunded.

Telephone inquiries should be directed to the Office of Data Management at (571) 272-4200.

Mimi Farmer

Patent Publication Branch
Office of Data Management

Adjustment date: 12/29/2009 MFARMER
03/16/2009 VVAN11 00230002 199761 12372979
02 FC:1111 540.00 CR

FORM PET651G (Rev. 08/07)

13 JAN 2009

UNITED STATES PATENT AND TRADEMARK OFFICE

COMMISSIONER FOR PATENTS
UNITED STATES PATENT AND TRADEMARK OFFICE
P.O. BOX 1450
ALEXANDRIA, VA 22313-1450
www.uspto.gov

D. Richard Anderson
Birch, Stewart, Kolasch & Birch, LLP
P.O. Box 747
Falls Church, VA 22040-0747

In re Application of	:	
Okano et al	:	DECISION ON REQUEST TO
Application No. 12/373,007	:	PARTICIPATE IN NEW ROUTE
Filed: January 8, 2009	:	PILOT PROJECT
Int'l filing date: July 11, 2007	:	AND
Attorney Docket No.: 4633-0299PUS1	:	PETITION TO MAKE SPECIAL
	:	UNDER 37 CFR 1.102(d)

This is a decision on the request to participate in the New Route pilot project and the petition under 37 CFR 1.102(d), filed January 8, 2009, to make the above-identified application special.

The request and petition are **GRANTED**.

A grantable request to participate in the New Route pilot project and petition to make special require:

(1) The U.S. application to be a national stage entry of a PCT application filed with the JPO as the PCT receiving Office;
(2) The PCT application must either contain a priority claim to a single priority application filed in the JPO or contain no priority claim;
(3) Where the PCT application contains a priority claim to a single priority application filed in the JPO, a first action on the merits (search and examination results) for the priority application must be available no later than 26 months from the priority date;
(4) Applicant must separately submit the following items at the same time as entry into the national stage of the PCT application in the USPTO:

(a) A request to participate in the New Route pilot project and a petition to make the U.S. national stage application special along with the required petition fee;
(b) Applicant must submit a copy of the claim(s) searched and examined by the JPO along with an English translation thereof;
(c) Applicant must submit a copy of the first office action by the JPO along with an English translation thereof;
(d) A statement that the translations are accurate; and
(e) Applicant must submit an IDS listing the documents cited by the JPO examiner in the JPO office action (if appropriate) together with copies of all the documents except U.S. patents or U.S. patent application publications.

The request to participate in the New Route pilot project and petition comply with the above requirements. Accordingly, the above-identified application has been accorded "special" status.

Telephone inquiries concerning this decision should be directed to Magdalen Greenlief at 571-272-8140.

All other inquiries concerning the examination or status of the application should be directed to the Technology Center that has been assigned the application.

Once national stage processing of the above-identified application is complete, the application will be forwarded to the examiner for action on the merits commensurate with this decision.

Magdalen Greenlief
Senior Legal Advisor
Office of the Deputy Commissioner for
Patent Examination Policy

FAX TRANSMISSION

DATE: January 8, 2009

PTO IDENTIFIER: Application Number

Inventor: Takashi OKANO et al.

MESSAGE TO: The Office of the Commissioner for Patents
ATTN: Ms. Magdalen Greenlief

FAX NUMBER: (571) 273-0125

FROM: BIRCH, STEWART, KOLASCH & BIRCH, LLP
D. Richard Anderson

PHONE: (703) 205-8035

Attorney Dkt. #: 4633-0299PUS1

PAGES (Including Cover Sheet): 110

CONTENTS:

Fee Transmittal (1 page)
Petition Fee Transmittal (1 page)
Request For Participation in the New Route Pilot Program between The JPO and the U.S.P.T.O. (2 pages)
Notice of Reasons for Rejection (English Translation) (4 pages)
Notice of Reasons for Rejection (3 pages)
Japanese text of Claims examined (1 page)
Translator's Certificate (1 page)
English Translation of Claim examined (2 pages)
Information Disclosure Statement (2 pages)
Information Disclosure Statement (PTO/SB/08) – (1 page)
Japanese References – Seven (7) (90 pages)
Charge $130.00 to deposit account 02-2448
Certificate of Transmission (1 page)

If your receipt of this transmission is in error, please notify this firm immediately by collect call to sender at (703) 205-8035 and send the original transmission to us by return mail at the address below.

This transmission is intended for the sole use of the individual and entity to whom it is addressed, and may contain information that is privileged, confidential and exempt from disclosure under applicable law. You are hereby notified that any dissemination, distribution or duplication of this transmission by someone other than the intended addressee or its designated agent is strictly prohibited.

BIRCH, STEWART, KOLASCH & BIRCH, LLP
8110 Gatehouse Road, Suite 100 East, P.O. Box 747, Falls Church, Virginia 22040-0747
Telephone: (703) 205-8000 **Facsimile:** (703) 205-8050

PTO/SB/97 (09-04)
Approved for use through 07/31/2006. OMB 0651-0031
U. S. Patent and Trademark Office; U.S. DEPARTMENT OF COMMERCE
Under the Paperwork Reduction Act of 1995, no persons are required to respond to a collection of information unless it displays a valid OMB control number.

Application No. (if known): NEW

Attorney Docket No.: 4633-0299PUS1

Certificate of Transmission under 37 CFR 1.8

I hereby certify that this correspondence is being facsimile transmitted to the United States Patent and Trademark Office.

on January 8, 2009
Date

Signature

Crystal L. Boyer
Typed or printed name of person signing Certificate

N/A
Registration Number, if applicable

(703) 205-8035
Telephone Number

Note: Each paper must have its own certificate of transmission, or this certificate must identify each submitted paper.

Fee Transmittal (1 page)
Petition Fee Transmittal (1 page)
Request For Participation in the New Route Pilot Program between The JPO and the U.S.P.T.O. (2 pages)
Notice of Reasons for Rejection (English Translation) (4 pages)
Notice of Reasons for Rejection (3 pages)
Japanese text of Claims examined (1 page)
Translator's Certificate (1 page)
English Translation of Claim examined (2 pages)
Information Disclosure Statement (2 pages)
Information Disclosure Statement (PTO/SB/08) – (1 page)
Japanese References – Seven (7) (90 pages)
Charge $130.00 to deposit account 02-2448

PTO/SB/17 (10-09)
Approved for use through 06/30/2010. OMB 0651-0032
U.S. Patent and Trademark Office; U.S. DEPARTMENT OF COMMERCE
Under the Paperwork Reduction Act of 1995, no person are required to respond to a collection of information unless it displays a valid OMB control number

Effective on 12/08/2004.
Fees pursuant to the Consolidated Appropriations Act, 2005 (H.R. 4818).

FEE TRANSMITTAL
For FY 2009

☐ Applicant claims small entity status. See 37 CFR 1.27

TOTAL AMOUNT OF PAYMENT ($) 130.00

Complete if Known	
Application Number	12/373,007
Filing Date	January 8, 2009
First Named Inventor	Takashi OKANO
Examiner Name	Not Yet Assigned
Art Unit	N/A
Attorney Docket No.	4633-0299PUS1

METHOD OF PAYMENT (check all that apply)

☐ Check ☐ Credit Card ☐ Money Order ☐ None ☐ Other (please identify): _____

☒ Deposit Account Deposit Account Number: 02-2448 Deposit Account Name: Birch, Stewart, Kolasch & Birch, LLP

For the above-identified deposit account, the Director is hereby authorized to: (check all that apply)

☒ Charge fee(s) indicated below
☐ Charge fee(s) indicated below, except for the filing fee
☒ Charge any additional fee(s) or underpayments of fee(s) under 37 CFR 1.16 and 1.17
☒ Credit any overpayments

FEE CALCULATION

1. BASIC FILING, SEARCH, AND EXAMINATION FEES

Application Type	FILING FEES Fee ($)	FILING FEES Small Entity Fee ($)	SEARCH FEES Fee ($)	SEARCH FEES Small Entity Fee ($)	EXAMINATION FEES Fee ($)	EXAMINATION FEES Small Entity Fee ($)	Fees Paid ($)
Utility	330	165	540	270	220	110	
Design	220	110	100	50	140	70	
Plant	220	110	330	165	170	85	
Reissue	330	165	540	270	650	325	
Provisional	220	110	0	0	0	0	

2. EXCESS CLAIM FEES

Fee Description	Fee ($)	Small Entity Fee ($)
Each claim over 20 (including Reissues)	52	26
Each independent claim over 3 (including Reissues)	220	110
Multiple dependent claims	390	195

Total Claims 5 - 20 or HP = _____ x Fee ($) _____ = Fee Paid ($) _____

HP = highest number of total claims paid for, if greater than 20.

Indep. Claims 1 - 3 or HP = _____ x Fee ($) _____ = Fee Paid ($) _____

HP = highest number of independent claims paid for, if greater than 3.

Multiple Dependent Claims: Fee ($) _____ Fee Paid ($) _____

3. APPLICATION SIZE FEE

If the specification and drawings exceed 100 sheets of paper (excluding electronically filed sequence or computer listings under 37 CFR 1.52(e)), the application size fee due is $270 ($135 for small entity) for each additional 50 sheets or fraction thereof. See 35 U.S.C. 41(a)(1)(G) and 37 CFR 1.16(s).

Total Sheets _____ - 100 = _____ Extra Sheets _____ /50 = _____ (round up to a whole number) x Fee ($) _____ = Fee Paid ($) _____

4. OTHER FEE(S) Fees Paid ($)

Non-English Specification, $130 fee (no small entity discount)

Other (e.g., late filing surcharge): 1464 Petitions to the Director not specifically ... 130.00

SUBMITTED BY			
Signature		Registration No. (Attorney/Agent) 40,439	Telephone (703) 205-8035
Name (Print/Type)	D. Richard Anderson		Date January 8, 2009

I hereby certify that this paper (along with any paper referred to as being attached or enclosed) is being transmitted by facsimile to the Patent and Trademark Office, facsimile no. (571) 273-0125, on the date shown below.

Dated: January 8, 2009 Signature: _____ (D. Richard Anderson)

DRA/clb

PTO/SB/17p (12-08)
Approved for use through 01/31/2009. OMB 0651-0031
U.S. Patent and Trademark Office; U.S. DEPARTMENT OF COMMERCE
Under the Paperwork Reduction Act of 1995, no person are required to respond to a collection of information unless it displays a valid OMB control number.

PETITION FEE
Under 37 CFR 1.17(f), (g) & (h) TRANSMITTAL
(Fees are subject to annual revision)

Send completed form to: Commissioner for Patents
P.O. Box 1450, Alexandria, VA 22313-1450

Application Number	12/373,007
Filing Date	January 8, 2009
First Named Inventor	Takashi OKANO
Art Unit	N/A
Examiner Name	Not Yet Assigned
Attorney Docket Number	4633-0299PUS1

Enclosed is a petition filed under 37 CFR 1.102(d) **that requires a processing fee (37 CFR 1.17(f), (g), or (h)). Payment of $** 130.00 **is enclosed.**
This form should be included with the above-mentioned petition and faxed or mailed to the Office using the appropriate Mail Stop (e.g., Mail Stop Petition), if applicable. *For transmittal of processing fees under 37 CFR 1.17(i), see form PTO/SB/17i.*

Payment of Fees (small entity amounts are NOT available for the petition fees).

[X] The Commissioner is hereby authorized to charge the following fees to Deposit Account No. 02-2448 :
[X] petition fee under 37 CFR 1.17(f), (g) or (h) [X] any deficiency of fees and credit of any overpayments

[ ] Check in the amount of $ _____ is enclosed.

[ ] Payment by credit card (Form PTO-2038 or equivalent enclosed). Do not provide credit card information on this form.

Petition Fees under 37 CFR 1.17(f): Fee $400 Fee Code 1462

For petitions filed under:
§ 1.36(a) – for revocation of a power of attorney by fewer than all applicants
§ 1.53(e) – to accord a filing date.
§ 1.57(a) – to accord a filing date.
§ 1.182 – for decision on a question not specifically provided for.
§ 1.183 – to suspend the rules.
§ 1.378(e) – for reconsideration of decision on petition refusing to accept delayed payment of maintenance fee in an expired patent.
§ 1.741(b) – to accord a filing date to an application under § 1.740 for extension of a patent term.

Petition Fees under 37 CFR 1.17(g): Fee $200 Fee Code 1463

For petitions filed under:
§ 1.12 – for access to an assignment record.
§ 1.14 – for access to an application.
§ 1.47 – for filing by other than all the inventors or a person not the inventor.
§ 1.59 – for expungement of information.
§ 1.103(a) – to suspend action in an application.
§ 1.136(b) – for review of a request for extension of time when the provisions of section 1.136(a) are not available.
§ 1.295 – for review of refusal to publish a statutory invention registration.
§ 1.296 – to withdraw a request for publication of a statutory invention registration filed on or after the date the notice of intent to publish issued.
§ 1.377 – for review of decision refusing to accept and record payment of a maintenance fee filed prior to expiration of a patent.
§ 1.550(c) – for patent owner requests for extension of time in ex parte reexamination proceedings.
§ 1.956 – for patent owner requests for extension of time in inter partes reexamination proceedings.
§ 5.12 – for expedited handling of a foreign filing license.
§ 5.15 – for changing the scope of a license.
§ 5.25 – for retroactive license.

Petition Fees under 37 CFR 1.17(h): Fee $130 Fee Code 1464

For petitions filed under:
§ 1.19(g) – to request documents in a form other than that provided in this part.
§ 1.84 – for accepting color drawings or photographs.
§ 1.91 – for entry of a model or exhibit.
§ 1.102(d) – to make an application special.
§ 1.138(c) – to expressly abandon an application to avoid publication.
§ 1.313 – to withdraw an application from issue.
§ 1.314 – to defer issuance of a patent.

Signature	January 8, 2009 Date
D. Richard Anderson Typed or printed name	40,439 Registration No., if applicable

I hereby certify that this paper (along with any paper referred to as being attached or enclosed) is being transmitted by facsimile to the Patent and Trademark Office, facsimile no. (571) 273-0125, on the date shown below.

Dated: January 8, 2009 Signature: _____ (D. Richard Anderson)

Doc Code: PET

PTO/SB/10 (07-08)
Approved for use through 07/31/2011. OMB 0651-0058
U.S. Patent and Trademark Office; U. S. DEPARTMENT OF COMMERCE
Under the Paperwork Reduction Act of 1995, no persons are required to respond to a collection of information unless it displays a valid OMB control number.

REQUEST FOR PARTICIPATION IN THE NEW ROUTE PILOT PROGRAM BETWEEN THE JPO AND THE USPTO

Application No.:	12/373,007	First Named Inventor:	Takashi OKANO
Int'l Filing Date:	July 11, 2007	Attorney Docket No.:	4633-0299PUS1
Title of the Invention:	TRANSMISSION SYSTEM FOR AIR CONDITIONER		

THIS REQUEST FOR PARTICIPATION IN THE NEW ROUTE PILOT PROGRAM MUST BE FAXED TO:
THE OFFICE OF THE COMMISSIONER FOR PATENTS AT 571-273-0125 DIRECTED TO THE ATTENTION OF MAGDALEN GREENLIEF

APPLICANT HEREBY REQUESTS PARTICIPATION IN THE NEW ROUTE PILOT PROGRAM AND PETITIONS TO MAKE THE ABOVE-IDENTIFIED APPLICATION SPECIAL UNDER THE NEW ROUTE PILOT PROGRAM.

The above-identified application is a national stage entry of international application PCT/JP 2007 / 063792 filed July 11, 2007.

This international application

☐ **does not claim priority to a JP application.**

☑ **does claim priority to a JP application** 2006-190251, filed July 11, 2006.

I. List of Required Documents:

a. (1) A copy of the first Office action by the JPO in the national stage entry into JPO of the PCT application if the PCT application does not claim priority to an earlier JP application

☐ Is attached.

☐ Is available via Dossier Access System. Applicant hereby requests that the USPTO obtain these documents via the Dossier Access System, or

a. (2) A copy of the first Office action by the JPO in the JP priority application if the PCT application does claim priority to an earlier JP application

☑ Is attached.

☐ Is available via Dossier Access System. Applicant hereby requests that the USPTO obtain these documents via the Dossier Access System.

b. A copy of all claims examined by the JPO in the JPO application

☑ Is attached.

☐ Is available via Dossier Access System. Applicant hereby requests that the USPTO obtain these documents via the Dossier Access System.

c. English translations of the documents in a. and b. above along with a statement that the English translations are accurate are attached.

This collection of information is required by 35 U.S.C. 119, 37 CFR 1.55, and 37 CFR 1.102(d). The information is required to obtain or retain a benefit by the public, which is to file (and by the USPTO to process) an application. Confidentiality is governed by 35 U.S.C. 122 and 37 CFR 1.11 and 1.14. This collection is estimated to take 2 hours to complete, including gathering, preparing, and submitting the completed application form to the USPTO. Time will vary depending upon the individual case. Any comments on the amount of time you require to complete this form and/or suggestions for reducing this burden should be sent to the Chief Information Officer, U.S. Patent and Trademark Office, U.S. Department of Commerce, P.O. Box 1450, Alexandria, VA 22313-1450. DO NOT SEND FEES OR COMPLETED FORMS TO THIS ADDRESS. FAX COMPLETED FORMS TO: Office of the Commissioner for Patents at 571-273-0125, Attention: Magdalen Greenlief.

Doc Code:

PTO/SB/10 (07-08)
Approved for use through 07/31/2011. OMB 0651-0031
U.S. Patent and Trademark Office; U. S. DEPARTMENT OF COMMERCE
Under the Paperwork Reduction Act of 1995, no persons are required to respond to a collection of information unless it displays a valid OMB control number.

REQUEST FOR PARTICIPATION IN THE NEW ROUTE PILOT PROGRAM BETWEEN THE JPO AND THE USPTO

(continued)

Application No.:	12/373,007	First Named Inventor:	Takashi OKANO

I. List of Required Documents (continued):

d.(1) An information disclosure statement listing the documents cited in the JPO office actions

☑ Is attached.

☑ Has already been filed in the above-identified U.S. application on 01/08/2009.

d.(2) Copies of all documents are attached except for U.S. patents or U.S patent application publications

☑ Are attached.

☑ Have already been filed in the above-identified U.S. application on 01/08/2009.

II. Payment of Fees:

The Commissioner is hereby authorized to charge the petition fee under 37 CFR 1.17(h) as required by 37 CFR 1.102(d) to ☑ Deposit Account No. 02-2448.

☐ Credit Card. Credit Card Payment Form (PTO-2038) is attached.

Signature	Date January 8, 2009
Name (Print/Typed) D. Richard Anderson	Registration Number 40,439

(TRANSLATION)

Docket No. SK06-1009

Mailing No. 514219

Mailing Date: October 16, 2007

NOTICE OF REASONS FOR REJECTION

Patent Application Number:	2006-190251 for patent
Drafted Date:	October 5, 2007
Examiner:	Youich NAGASAKI 8610 3M00
Agent:	Hiroshi MAEDA (and 10 other persons)
Applied Article	Section 29(2)

This application shall be rejected for the following reasons. Any argument should be filed within 60 days from the mailing date of this notice.

REASON

The inventions according to the below-mentioned claims of this application are inventions which could be readily inferred by those who have common knowledge in the technical field to which the invention belongs, based on inventions in the below-listed publications distributed or inventions available to the public via electric communication lines, in Japan and/or foreign countries prior to the filing of the present invention. Hence, the present invention cannot be granted for patent under the provisions of Section 29(2) of the Japanese Patent Law.

REMARKS (See List of Cited References)

Claim 1

Best Available Copy

Cited References 1-3

Comments:

Cited Reference 1 discloses an invention in which an outdoor unit which constitutes one group and a plurality of indoor units are connected to each other by a bus, and each unit bus is connected to a centralized control device 7 through a system bus 4 (paragraph [0008]).

Cited Reference 2 discloses an invention in which four-port hubs are cascaded, and a terminal station and a network control station are connected to ports which are not used for the cascade connection (paragraphs [0013] and [0018]).

Cited Reference 3 discloses an invention in which a switching HUB 23 and an air conditioning unit are connected to each other through a gateway device 200 (paragraphs [0017] to [0019] and FIG. 1).

Accordingly, it is acknowledged that a person skilled in the art could easily attain the invention of claim 1 of the present application by applying the inventions disclosed in Cited References 2 and 3 to the invention disclosed in Cited Reference 1.

Claim 2

Cited References 1-4

Comments:

Cited Reference 4 discloses a spanning tree algorithm utilizing a switching HUB (paragraphs [0002] to [0004]).

Claim 3

Cited References 1-5

Comments:

Cited Reference 5 discloses an invention in which an insulating transformer 16 intervenes at a necessary part (paragraph [0020]).

Claim 4

Cited References 1-6

Cited Reference 6 discloses an invention in which all transmission lines are wires having the same specification, and connectors for connecting units and the transmission lines to one another also have the same specification (paragraph [0026]).

Claim 5

Cited References 1-7

Comments:

Cited Reference 7 discloses an invention which includes an Ethernet switch which is connected to Ethernet network and carries out packet transfer among a plurality of ports (paragraph [Claim 1]).

List of Cited References

1. Japanese Laid-Open Patent Publication No. 2000-28181
2. Japanese Laid-Open Patent Publication No. 5-175965
3. Japanese Laid-Open Patent Publication No. 2004-356754
4. Japanese Laid-Open Patent Publication No. 2006-50222
5. Japanese Laid-Open Patent Publication No. 9-80085
6. Japanese Laid-Open Patent Publication No. 8-94154
7. Japanese Laid-Open Patent Publication No. 2004-96460

Record of Search Result for Prior Art References

Searched Field	IPC	F24F	11/02
		H04L	12/28

Prior Art References: Not particularly listed

This Record of Search Result for Prior Art References does not constitute reasons for rejections.

If there is any question relating to the contents of this Notice of Reasons of Rejection, please contact at:

Youich NAGASAKI

Second Patent Examination Department

Refrigerating and Air-conditioning Engineering Sub-Division

Tel: 03-3581-1101 (Extension No. 3377)

整理番号:SK06-1009　発送番号:514219　発送日:平成19年10月16日　1

前田 07.10.16 特許

拒絶理由通知書

特許出願の番号	特願２００６－１９０２５１
起案日	平成１９年１０月　５日
特許庁審査官	長崎　洋一　　８６１０　３Ｍ００
特許出願人代理人	前田　弘（外１０名）　様
適用条文	第２９条第２項

この出願は、次の理由によって拒絶をすべきものです。これについて意見がありましたら、この通知書の発送の日から６０日以内に意見書を提出してください。

理　由

この出願の下記の請求項に係る発明は、その出願前に日本国内又は外国において、頒布された下記の刊行物に記載された発明又は電気通信回線を通じて公衆に利用可能となった発明に基いて、その出願前にその発明の属する技術の分野における通常の知識を有する者が容易に発明をすることができたものであるから、特許法第２９条第２項の規定により特許を受けることができない。

記　　（引用文献等については引用文献等一覧参照）

・請求項　　１

・引用文献等　１－３

・備考　　引用文献１には、１つのグループを構成する室外ユニットと複数の室内ユニット間をバスで接続し、各ユニット間バスをシステムバス４を介して集中制御装置７と接続させた発明について記載されている（段落【０００８】）。　中継装置同士の接続

引用文献２には、４ポートハブをカスケード状に接続し、カスケード接続に使用していないポートに端末局、ネットワーク管理ステーションを接続させた発明について記載されている（段落【００１３】、【００１８】）。

引用文献３には、スイッチングＨＵＢ２３と空調設備とを、ゲートウェイ装置２００を介して接続させた発明について記載されている（段落【００１７】～【００１９】、【図１】）。

したがって、本願請求項１に係る発明は、引用文献１に記載された発明に引用文献２、３に記載された発明を適用することにより当

・請求項　2
・引用文献等　１－４
・備考　引用文献４には、スイッチングＨＵＢを用いたスパニングツリーアルゴリズムについて記載されている（段落【０００２】～【０００４】）。

・請求項　3
・引用文献等　１－５
・備考　引用文献５には、必要箇所に絶縁トランス１６を介在させた発明について記載されている（段落【００２０】）。

・請求項　4
・引用文献等　１－６
・備考　引用文献６には、各伝送線をすべて同一使用の電線とし、機器と伝送線とを結合するコネクタも同一とさせた発明について記載されている（段落【００２６】）。

・請求項　5
・引用文献等　１－７
・備考　引用文献７には、イーサネットネットワークに接続して、複数のポート間のパケット転送を行うイーサネットスイッチを備えた発明について記載されている（段落【請求項１】）。

引　用　文　献　等　一　覧

1. 特開２０００－２８１８１号公報
2. 特開平５－１７５９６５号公報
3. 特開２００４－３５６７５４号公報
4. 特開２００６－５０２２２号公報
5. 特開平９－８００８５号公報
6. 特開平８－９４１５４号公報
7. 特開２００４－９６４６０号公報

先行技術文献調査結果の記録

・調査した分野　ＩＰＣ　Ｆ２４Ｆ　１１／０２
　　Ｈ０４Ｌ　１２／２８

この先行技術文献調査結果の記録は拒絶理由を構成するものではありません。

この拒絶理由通知の内容についてお問い合わせの場合は、下記まで御連絡下さい。

特許庁特許審査第二部冷却機器　長崎　洋一
ｔｅｌ：０３(３５８１)１１０１　内線３３７７

The claims searched and examined by the JPO

【特許請求の範囲】
【請求項１】
室外機（30）と複数の室内機（40）とを内外伝送ライン（10B）を介してデータ伝送可能に接続してなる空調ユニット（20）が複数設けられ、該各空調ユニット（20，20）を集中制御する集中制御ユニット（60）と該各空調ユニット（20，20）とが集中伝送ライン（10A）を介してデータ伝送可能に接続された空気調和装置の伝送装置であって、
前記内外伝送ライン（10B）と前記集中伝送ライン（10A）とが、前記室外機（30）に接続され且つ両伝送ライン（10A，10B）間のデータ伝送を分離可能な伝送中継手段（25）を介して接続されており、
前記伝送中継手段（25）は、前記各空調ユニット（20，20）間における前記集中伝送ライン（10A）の接続をデイジーチェーン（daisy chain）方式とするためのスイッチングハブ（31）と、該スイッチングハブ（31）に接続され前記両伝送ライン（10A，10B）間のデータ伝送を分離可能なゲートウェイ（32）とを有することを特徴とする空気調和装置の伝送装置。
【請求項２】
請求項１において、
前記スイッチングハブ（31）は、前記各空調ユニット（20，20）間における前記集中伝送ライン（10A）の接続をスパニングツリー（spanning tree）方式とするための３ポートスイッチングハブで構成されていることを特徴とする空気調和装置の伝送装置。
【請求項３】
請求項１において、
前記伝送中継手段（25）は、コモンモードノイズ低減用の絶縁トランス（35）を有することを特徴とする空気調和装置の伝送装置。
【請求項４】
請求項１において、
前記集中伝送ライン（10A）は、誤配線防止用のコネクタを有する伝送線で構成されていることを特徴とする空気調和装置の伝送装置。
【請求項５】
請求項１において、
前記集中伝送ライン（10A）は、イーサネット（登録商標）で構成されていることを特徴とする空気調和装置の伝送装置。
【発明の詳細な説明】
【技術分野】
【０００１】
本発明は、複数の空調ユニットを集中制御するための空気調和装置の伝送装置に関するものである。
【背景技術】
【０００２】
従来より、ビル用マルチ空調機の伝送装置として、１台の室外機に複数台の室内機が内外伝送ラインによって接続されて１つの空調ユニットが構成されるとともに、この複数の空調ユニットの室外機が集中伝送ラインを介して集中制御ユニットに接続されたものが知られている（例えば、特許文献１参照）。
【０００３】
特許文献１に記載の伝送装置では、集中制御ユニットと室外機とが集中伝送ラインを介してバス方式で接続されている。ここで、集中伝送ラインと室内機の通信ラインとのプロトコルを同一とすることで、通信インターフェースを１つにすることができる。そして、室外機内部において、集中伝送ラインと室内機の通信ラインとがリレー等を介して接続されていることから、集中伝送ラインから見た場合、室内機は集中伝送ラインから分岐した通信線上にバス方式で接続されているとみなすことができる。
【特許文献１】特許第３２０６４７号公報

IN THE MATTER OF
PATENT APPLICATION

CERTIFICATE

I, Noriko NAKASHIMA, residing at 14-5, Nishihata, Tomooka, Nagaokakyo-shi, Kyoto 617-0843, Japan, hereby certify that I am well acquainted with the English and Japanese languages, that the document attached hereto is a translation made by me of the Japanese Patent Application No.

2006-190251

and certify that it is a true translation to the best of my knowledge and belief.

Dated this 6th day of January 2009.

Signature

Noriko Nakashima

Noriko NAKASHIMA

CLAIMS

[1] A transmission system for an air conditioner, comprising:

a plurality of air conditioning units (20) in each of which an outdoor unit (30) and a plurality of indoor units (40) are connected to each other through an internal/external transmission line (10B) so as to be capable of data transmission; and

an integrated transmission line (10A) connecting a centralized control unit (60) for centralized control on the air conditioning units (20, 20) and each of the air conditioning units (20, 20) so as to be capable of data transmission,

wherein each internal/external transmission line (10B) and the integrated transmission line (10A) are connected to the outdoor units (30), and are connected to each other by transmission relay means (25) capable of separating data transmission between the transmission lines (10A, 10B), and

the transmission relay means (25) includes: a switching hub (31) for daisy-chain (daisy-chain) connecting the integrated transmission line (10A) between the air conditioning units (20, 20); and a gateway (32) connected to the switching hub (31) and being capable of separating data transmission between the transmission lines (10A, 10B).

[2] The transmission system of claim 1,

wherein the switching hub (31) is a three-port switching hub for connecting the integrated transmission line (10A) between the air conditioning units (20, 20) to have a spanning tree (spanning tree).

[3] The transmission system of claim 1,

wherein the transmission relay means (25) includes an insulation transformer (35) for common mode noise reduction.

[4] The transmission system of claim 1,

wherein the integrated transmission line (10A) is formed of a transmission wire including a mis-wiring protection connector.

[5] The transmission system of claim 1,

wherein the integrated transmission line (10A) is composed of Ethernet (registered trademark).

Docket No.: 4633-0299PUS1
(PATENT)

IN THE UNITED STATES PATENT AND TRADEMARK OFFICE

In re Patent Application of:
Takashi OKANO et al.

Application No.: 12/373,007

Confirmation No.: N/A

Filed: January 8, 2009

Art Unit: N/A

For: TRANSMISSION SYSTEM FOR AIR CONDITIONER

Examiner: Not Yet Assigned

INFORMATION DISCLOSURE STATEMENT (IDS)

MS PCT
Commissioner for Patents
P.O. Box 1450
Alexandria, VA 22313-1450

Madam:

Pursuant to 37 CFR 1.56, 1.97 and 1.98, the attention of the Patent and Trademark Office is hereby directed to the references listed on the attached PTO/SB/08. It is respectfully requested that the information be expressly considered during the prosecution of this application, and that the references be made of record therein and appear among the "References Cited" on any patent to issue therefrom.

This Information Disclosure Statement accompanies the new patent application submitted herewith. A summary/abstract translation of the non-English language references is enclosed. A partial translation and abstract is provided for JP-A-2004-96460, which is also cited in the Notice of Reasons for Rejection. JP-B2-3206476, which corresponds to JP-A-10-227511 is cited on page 1 of the specification. The first six Japanese references are also cited in the Notice of Reasons for Rejection.

Application No.: 12/373,007 Docket No.: 4633-0299PUS1

In accordance with 37 CFR 1.98(a)(2)(ii), Applicant has not submitted copies of U.S. patents and U.S. patent applications. Applicant submits herewith copies of foreign patents and non-patent literature in accordance with 37 CFR 1.98(a)(2).

A concise explanation of relevance of some of the items listed on form PTO/SB/08 is in the form of an English language copy of a Search Report from a foreign patent office, issued in a counterpart application, which refers to the relevant portions of the references.

In accordance with 37 CFR 1.97(g), the filing of this Information Disclosure Statement shall not be construed to mean that a search has been made or that no other material information as defined in 37 CFR 1.56(a) exists. In accordance with 37 CFR 1.97(h), the filing of this Information Disclosure statement shall not be construed to be an admission that any patent, publication or other information referred to therein is "prior art" for this invention unless specifically designated as such.

It is submitted that the Information Disclosure Statement is in compliance with 37 CFR 1.98 and the Examiner is respectfully requested to consider the listed references. If necessary, the Commissioner is hereby authorized in this, concurrent, and future replies, to charge payment or credit any overpayment to our Deposit Account No. 02-2448 for any additional fees required under 37 C.F.R. § 1.16 or under § 1.17; particularly, extension of time fees.

Dated: January 8, 2009

Respectfully submitted,

By

D. Richard Anderson
Registration No.: 40,439
BIRCH, STEWART, KOLASCH & BIRCH, LLP
8110 Gatehouse Road
Suite 100 East
P.O. Box 747
Falls Church, Virginia 22040-0747
(703) 205-8000
Attorney for Applicant

Attachment(s)

DRA/clb

PTO/SB/08b (12-08)
Approved for use through 01/31/2009. OMB 0651-0031
U.S. Patent and Trademark Office; U.S. DEPARTMENT OF COMMERCE
Under the Paperwork Reduction Act of 1995, no persons are required to respond to a collection of information unless it contains a valid OMB control number.

Substitute for form 1449/PTO

INFORMATION DISCLOSURE STATEMENT BY APPLICANT

(Use as many sheets as necessary)

Sheet	1	of	1

Complete if Known	
Application Number	12/373,007
Filing Date	January 8, 2009
First Named Inventor	Takashi OKANO
Art Unit	N/A
Examiner Name	Not Yet Assigned
Attorney Docket Number	4633-0299PUS1

U.S. PATENT DOCUMENTS

Examiner Initials*	Cite No.[1]	Document Number Number-Kind Code[2] (if known)	Publication Date MM-DD-YYYY	Name of Patentee or Applicant of Cited Document	Pages, Columns, Lines, Where Relevant Passages or Relevant Figures Appear

FOREIGN PATENT DOCUMENTS

Examiner Initials*	Cite No.[1]	Foreign Patent Document Country Code[3]-Number[4]-Kind Code[5] (if known)	Publication Date MM-DD-YYYY	Name of Patentee or Applicant of Cited Document	Pages, Columns, Lines, Where Relevant Passages Or Relevant Figures Appear	T[6]
	BA	JP-2000-28181-A	01-25-2000			ABS
	BB	JP-5-175965-A	07-13-1993			ABS
	BC	JP-2004-356754-A	12-16-2004			ABS
	BD	JP-2006-50222-A	02-16-2006			ABS
	BE	JP-9-80085-A	03-28-1997			ABS
	BF	JP-8-94154-A	04-12-1996			ABS
	BG	JP-2004-353888-A	12-16-2004			ABS
	BH	JP-2004-96460-A	03-25-2004			PAR. TRAN/ ABS
	BI	JP-3206476-B2	07-06-2001			
	BJ	JP-10-227511-A	08-25-1998			ABS

NON PATENT LITERATURE DOCUMENTS

Examiner Initials*	Cite No.[1]	Include name of the author (in CAPITAL LETTERS), title of the article (when appropriate), title of the item (book, magazine, journal, serial, symposium, catalog, etc.), date, page(s), volume-issue number(s), publisher, city and/or country where published.	T[2]

Examiner Signature		Date Considered	

*EXAMINER: Initial if reference considered, whether or not citation is in conformance with MPEP 609. Draw line through citation if not in conformance and not considered. Include copy of this form with next communication to applicant.

[1]Applicant's unique citation designation number (optional). [2]Applicant is to place a check mark here if English language Translation is attached.

*EXAMINER: Initial if reference considered, whether or not citation is in conformance with MPEP 609. Draw line through citation if not in conformance and not considered. Include copy of this form with next communication to applicant. [1] Applicant's unique citation designation number (optional). [2] See Kinds Codes of USPTO Patent Documents at www.uspto.gov or MPEP 901.04. [3] Enter Office that issued the document, by the two-letter code (WIPO Standard ST.3). [4] For Japanese patent documents, the indication of the year of the reign of the Emperor must precede the serial number of the patent document. [5] Kind of document by the appropriate symbols as indicated on the document under WIPO Standard ST.16 if possible. [6] Applicant is to place a check mark here if English language Translation is attached.

PATENT ABSTRACTS OF JAPAN

(11)Publication number : 2000-028181
(43)Date of publication of application : 25.01.2000

(51)Int.Cl. F24F 11/02
F25B 13/00

(21)Application number : 10-193900
(22)Date of filing : 09.07.1998

(71)Applicant : HITACHI LTD
HITACHI SHIMIZU ENG CO LTD

(72)Inventor : SATO TAKAHARU
YOSHIDA SATORU
WATANABE MASASHI
MOCHIZUKI MASAMICHI

(54) AIR CONDITIONING SYSTEM

(57)Abstract:
PROBLEM TO BE SOLVED: To automatically perform the setting of the addresses of the outdoor units and the indoor units of many multiroom type air conditioners.

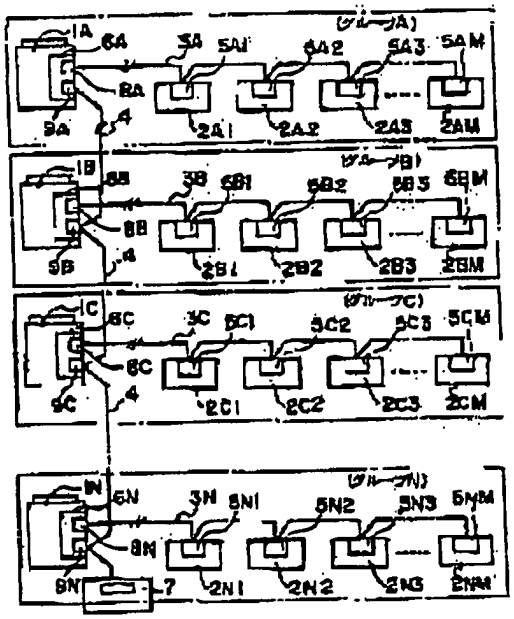

SOLUTION: In an air conditioning system where plural groups of multiroom type air conditioners each of which has an interunit bus between one outdoor unit and a plurality of indoor units are connected with one another and a system bus is provided between each outdoor unit and the next, (1) the system bus is made discontinuous, and in each group (for example, group A), the outdoor unit 1A generates temporary indoor addresses with the random value generation means of the indoor units 2A1-2AM through the unit bus 3A, and revises them into serial numbers, and makes each of them the regular indoor address of each indoor unit, and (2) the system bus 4 is made continuous, and each outdoor unit 1A-1B generates a temporary outdoor address with a random value generation means, and revises it into serial numbers, and makes each of them the regular outdoor address of the outdoor unit, and (3) in each group, the outdoor unit sets the address consisting of a regular outdoor address and a regular indoor address to each indoor unit.

(19)日本国特許庁（ＪＰ）

(12) 公開特許公報（Ａ）

(11)特許出願公開番号
特開2000－28181
（P2000－28181A）

(43)公開日 平成12年1月25日(2000.1.25)

(51)Int.Cl.⁷	識別記号	ＦＩ	テーマコード（参考）
Ｆ２４Ｆ 11/02	１０２	Ｆ２４Ｆ 11/02 １０２Ｔ	３Ｌ０６０
	１０３	１０３Ｄ	３Ｌ０６１
Ｆ２５Ｂ 13/00	１０４	Ｆ２５Ｂ 13/00 １０４	３Ｌ０９２

審査請求 未請求 請求項の数３ ＯＬ （全 ７ 頁）

(21)出願番号 特願平10－193900

(22)出願日 平成10年7月9日(1998.7.9)

(71)出願人 000005108
株式会社日立製作所
東京都千代田区神田駿河台四丁目６番地

(71)出願人 000233310
日立清水エンジニアリング株式会社
静岡県清水市村松390番地

(72)発明者 佐藤 敬治
東京都千代田区神田駿河台四丁目６番地
株式会社日立製作所空調システム事業部内

(74)代理人 100066979
弁理士 鵜沼 辰之

最終頁に続く

(54)【発明の名称】 空調システム

(57)【要約】
【課題】 多数のマルチ形空気調和機の室外ユニット、室内ユニットのアドレス設定を自動的に行う。
【解決手段】 一室外ユニットと複数の室内ユニット間にユニット間パスを有するマルチ形空気調和機を複数グループ接続し、各室外ユニット間にシステムパスを設けた空調システムにおいて、(1)システムパス不通にして、各グループ(例Ａ)で室外ユニット１Ａはユニット間パス３Ａを通じて室内ユニット２Ａ１～２ＡＭのランダム値発生手段(図示なし)で仮室内アドレスを発生させ、通し番号に直して各室内ユニットの正規室内アドレスとし、(2)システムパス４を導通させ、各室外ユニット１Ａ～１Ｂは、それぞれランダム値発生手段(図示なし)で仮室外アドレスを発生させ、通し番号に直して室外ユニットの正規室外アドレスとし、(3)各グループで室外ユニットは各室内ユニットに対し正規室外アドレスと正規室内アドレスからなるアドレスを設定する。

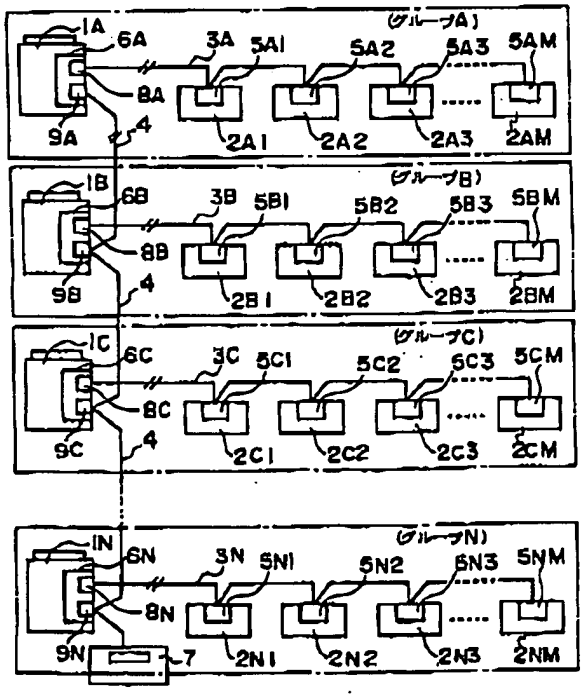

1A～1N：室外ユニット　4：システムパス

【特許請求の範囲】

【請求項１】　１台の室外ユニットと複数の室内ユニット間でユニット間バスを通じて情報交換するマルチ形空気調和機を複数グループ接続し、各グループの室外ユニットが互いにシステムバスを通じて情報交換するよう構成された空調システムにおいて、
システムバスを不通にして、各グループ内で室外ユニットは室内ユニットに対して室内アドレスを設定し記憶させ、各室外ユニットは自身の仮の室外アドレスを設定し記憶し、それから各グループ内で室外ユニットは仮の室外アドレスを各室内ユニットに送信し記憶させて、該仮の室外アドレスによってグルーピングし、その後、システムバスを導通させ、各室外ユニットは他の室外ユニットと仮の室外アドレスが重複しないことを確認し、各室外ユニットにそれぞれ異なる正規の室外アドレスを設定し、正規の室外アドレスにより各室外ユニット及び各室内ユニットに記憶した仮アドレスを更新して、各室内ユニットに対して正規の室外アドレスと室内アドレスからなるアドレスを設定するよう構成したことを特徴とする空調システム。

【請求項２】　１台の室外ユニットと複数の室内ユニット間でユニット間バスを通じて情報交換するマルチ形空気調和機を複数グループ接続し、各グループの室外ユニットが互いにシステムバスを通じて情報交換するよう構成された空調システムにおいて、
システムバスを不通にして、各グループで室外ユニットはユニット間バスを通じて各室内ユニットのランダム値発生手段により仮の室内アドレスを発生させアドレス記憶手段に記憶させ、仮の室内アドレスが重複していないことを確認した場合に、通し番号を付けて各室内ユニットに送信し、正規の室内アドレスとしてアドレス記憶手段に記憶させ、その後システムバスを導通させて、各室外ユニットは、それぞれのランダム値発生手段により仮の室外アドレスを発生させ、仮の室外アドレスをそれぞれのアドレス記憶手段に記憶し、各グループ内で室外ユニットは、仮の室外アドレスを室内ユニットに送信し記憶させ、同一室外アドレス間でのみ通信できるようグルーピング処理し、その後システムバスを導通させて、各室外ユニットは他の室外ユニットと仮の室外アドレスが重複していないことを確認し、室外ユニットの一つが親となって通し番号を付け正規の室外アドレスとしてそれぞれの室外ユニットのアドレス記憶手段に記憶させ、各グループで室外ユニットは、正規の室外アドレスを各室内ユニットに送信し記憶させ、各室内ユニットに対して正規の室外アドレスと正規の室内アドレスとからなるアドレスを設定するよう構成したことを特徴とする空調システム。

【請求項３】　複数の室外ユニットの一群に複数の室内ユニットの一群が接続し、室外ユニットと各室内ユニットは互いにシステムバスを通じて情報交換するよう構成された空調システムにおいて、
室外ユニットの一つは室内ユニットに対して室内アドレスを設定し記憶させ、各室外ユニットは自身の仮の室外アドレスを設定し記憶し、その後、各室外ユニットはそれぞれ他の室外ユニットと交信し仮の室外アドレスを比較し、重複の場合はいずれかの室外ユニットが仮の室外アドレスを変更し、重複のない場合に、室外ユニットの一つは各室外ユニットにそれぞれ異なる正規の室外アドレスを設定するよう構成したことを特徴とする空調システム。

【発明の詳細な説明】

【０００１】

【発明の属する技術分野】本発明は、複数グループのマルチ形空気調和機からなる空調システムにおける室外ユニット及び室内ユニットのアドレス設定に関する。

【０００２】

【従来の技術】従来、複数グループのマルチ形空気調和機（又は室外ユニット及び室内ユニットが各１台のシングル形空気調和機も含む）からなる空調システムにおけるアドレス設定方法は、次のようなものが用いられていた。

（１）室外ユニット、室内ユニットに設けたアドレス設定器（例えばディップスイッチ）にてアドレスを手動設定する。

（２）各グループの室外ユニットは、それぞれがもつランダム値発生手段により発生したランダム値を互いに比較して重複のない場合に、通し番号を付けてグループ番号を設定する。次に、１つのグループ室外ユニットが暖房運転して、温度変化の生じた室内ユニットに同一グループ番号を与え、さらに順次に各室内ユニットの膨張弁を動作させてその際の圧力変化を基づいて各室内ユニットのアドレスを設定する。同様の運転を順次各グループで行ってアドレスを設定することにより、各室外ユニット及び各室内ユニットに対してグループアドレスとユニットアドレスからなるアドレスを決める（特開平７－９１７１８号公報）。

【０００３】

【発明が解決しようとする課題】しかし前述の従来技術（１）では室外ユニット、室内ユニットのアドレス設定をするのに大変時間がかかり、また設定誤りがあると試運転等の後工程に多大な迷惑を掛けることとなり、かつ多額の費用がかかる。従来技術（２）では設定に時間がかかる事や、アドレスが誤設定される等の問題があった。

【０００４】本発明の目的は、従来技術の問題を解決すること、すなわちマルチ形空気調和機の室外ユニット、室内ユニットのアドレス設定を自動的に確実に短時間に行うようにすることにある。

【課題を解決するための手段】上記目的を達成するために、本発明は、１台の室外ユニットと複数台の室内ユニット間でユニット間バスを通じて情報交換するマルチ形空気調和機を複数グループ接続し、各グループの室外ユニットは互いにシステムバスを通じて情報交換するよう構成された空調システムにおいて、各室外ユニット及び各室内ユニットのアドレスを自動的に設定する自動アドレス設定機能を有するものである。この自動アドレス設定機能は、(ａ)システムバスを不通にして、各グループ内で室外ユニットは室内ユニットに対して室内アドレスを設定し記憶させ、(ｂ)各室外ユニットは自身の仮の室外アドレスを設定し記憶し、(ｃ)それから各グループ内で室外ユニットは仮の室外アドレスを各室内ユニットに送信し記憶させて、この仮の室外アドレスによってのみ室外ユニットと各室内ユニットが情報交換するようにグルーピングし、(ｄ)その後システムバスを導通させ、各室外ユニットは他の室外ユニットと仮の室外アドレスが重複しないことを確認し、各室外ユニットにそれぞれ異なる正規の室外アドレスを設定し、(ｅ)該正規の室外アドレスにより各室外ユニット及び各室内ユニットに記憶した仮アドレスを更新して、各室内ユニットに対して正規の室外アドレスと室内アドレスとからなるアドレスを設定するように構成したものである。

【０００６】さらに詳しく説明すると、この自動アドレス設定機能は、(ａ)システムバスを不通にして、各グループで室外ユニットはユニット間バスを通じて各室内ユニットのランダム値発生手段により仮の室内アドレスを発生させ、アドレス記憶手段に記憶させ、仮の室内アドレスが重複していないことを確認した場合に、通し番号を付けて各室内ユニットに送信し、正規の室内アドレスとしてアドレス記憶手段に記憶させ、(ｂ)各室外ユニットは、それぞれのランダム値発生手段により仮の室外アドレスを発生させ、仮の室外アドレスをそれぞれのアドレス記憶手段に記憶し、(ｃ)各グループ内で室外ユニットは、仮の室外アドレスを、室内ユニットに送信し記憶させ、同一室外アドレス間でのみ通信できるようグルーピング処理し、(ｄ)その後システムバスを導通させて、各室外ユニットは他の室外ユニットと仮の室外アドレスが重複していないことを確認し、室外ユニットの一つが親となって通し番号を付け正規の室外アドレスとしてそれぞれの室外ユニットのアドレス記憶手段に記憶させ、(ｅ)各グループで、室外ユニットは、正規の室外アドレスを各室内ユニットに送信し記憶させて、各室内ユニットに対して正規の室外アドレスと正規の室内アドレスとからなるアドレスを設定する。

【０００７】また、本発明の別の発明は、複数の室外ユニットの一群に複数の室内ユニットの一群が接続し、室外ユニットと各室内ユニットは共通のユニット間バスを通じて情報交換し、各室外ユニットは互いにシステムバ[illegible]において、(a)室外ユニットの一つは室内ユニットに対して室内アドレスを設定し、記憶させ、(b)各室外ユニットは自身の仮の室外アドレスを設定し、記憶し、(d)その後、各室外ユニットはそれぞれ他の室外ユニットと交信して仮の室外アドレスを比較し、重複の場合はいずれかの室外ユニットが仮の室外アドレスを変更し、重複のない場合は、室外ユニットの一つは各室外ユニットにそれぞれ異なる正規の室外アドレスを設定するように構成したものである。

【０００８】

【発明の実施の形態】以下、本発明の一実施の形態について図面を用いて説明する。図１は本発明の一実施の形態の空調システムの構成を示す図である。本実施の形態の空調システムは、１台の室外ユニットとこの室外ユニットに接続する複数（Ｍ）台の室内ユニットとを一つのグループとして構成するマルチ形空気調和機を、複数（Ｎ）グループ設置して、構成される。各マルチ形空気調和機のうちグループＡは室外ユニット１Ａと室内ユニット２Ａ１、２Ａ２、・・・２ＡＭからなり、該室外ユニットと各室内ユニットはユニット間バス３Ａで接続されている。グループＢは室外ユニット１Ｂと室内ユニット２Ｂ１、２Ｂ２、・・・２ＢＭからなり、この室外ユニットと各室内ユニットはユニット間バス３Ｂで接続されている。グループＣは室外ユニット１Ｃと室内ユニット２Ｃ１、２Ｃ２、・・・２ＣＭからなり該室外ユニットと各室内ユニットはユニット間バス３Ｃで接続されている。以下同様にして、グループＮのマルチ形空気調和機は室外ユニット１Ｎと室内ユニット２Ｎ１、２Ｎ２、・・・２ＮＭからなり、該室外ユニットと各室内ユニットはユニット間バス３Ｎで接続されている。そしてユニット間バス３Ａ，３Ｂ，３Ｃ・・・３Ｎはシステムバス４を介して集中制御装置７と接続する。室外ユニット１Ａ，１Ｂ，１Ｃ，・・・１Ｍは室外制御装置６Ａ，６Ｂ，６Ｃ・・・６Ｍを備え、また室内ユニット２Ａ１～２ＡＭ，２Ｂ１～２ＢＭ，２Ｃ１～２ＣＭ，・・・，２Ｎ１～２ＮＭは室内制御装置５Ａ１～５ＡＭ，５Ｂ１～５ＢＭ，５Ｃ１～５ＣＭ，・・・，５Ｎ１～５ＮＭを備えている。

【０００９】図２は各室外制御装置（６Ａ，６Ｂ，６Ｃ・・・６Ｍ）、及び各室内制御装置（５Ａ１～５ＡＭ，５Ｂ１～５ＢＭ，５Ｃ１～５ＣＭ・・・５Ｎ１～５ＮＭ）の内部ブロックを示すものである。室外制御装置６Ａ～６Ｍには、室外ユニット全体の制御を行う室外ＣＰＵ１１と、室外ユニットの入出力制御を行う入出力手段１２と、仮のアドレス値を発生させるランダム値発生手段１３と、アドレスを記憶するアドレス記憶手段１４と、室内ユニットと情報交換する通信手段ユニット間バス伝送回路８と、他の室外ユニットと情報交換する通信手段システムバス伝送回路９と、を備えている。一方、室内制御装置５Ａ１～５ＡＭ・・・５Ｎ１～５ＮＭは

室内ユニット全体の制御を行う室内ＣＰＵ２１と、室内ユニットの入出力制御を行う入出力手段２２と、仮のアドレス値を発生させるランダム値発生手段２３と、アドレスを記憶するアドレス記憶手段２４と、同一グループ内の室外ユニットまたは他の室内ユニットと情報更新するユニット間バス伝送回路２５と、を備えている。

【００１０】図３は図１に示すグループＡのマルチ形空気調和機の冷凍サイクル構成図である。冷凍サイクル構成機器として、各室内ユニット２Ａ１～２ＡＮには、熱交換機３０、膨張弁３１、送風機３２が備えられ、一方、室外ユニット１Ａには熱交換機３３、アキュームレータ３４、四方弁３５、膨張弁３６、送風機３７、圧縮機３８を備えている。また、室外ユニットと各室内ユニットは、冷媒配管３９と分岐管４０で接続されている。

【００１１】次に本発明の空調システムにおける自動アドレス設定について述べる。まず、電源投入時、室外ユニット１Ａは、ユニット間バス伝送回路８Ａを介して、同一グループ内の複数の室内ユニット２Ａ１～２ＡＭに対して、室内アドレス自動設定処理を行う。この処理の手法は、基本的に特開平３－２４４９５４号公報に記載の技術と同じである。

【００１２】すなわち、（１）電源投入時にシステムバスの不通状態でグループＡにおいて、室外ユニット１Ａは、ユニット間バス３Ｂを通じて各室内ユニット２Ａ１～２ＡＭに対して要求を送信し、各室内ユニットは、その要求に応じて、それぞれランダム値発生手段２３により仮の室内アドレスを発生させ、それをアドレス記憶手段２４に格納する。室外ユニット１Ａは、各室内ユニット２Ａ１～２ＡＭと交信し室内ユニットの仮のアドレスが重複していないかチェックし、重複のある場合は、重複がなくなるまで、該当する室内ユニットにおいてランダム値発生手段２３により別の仮の室内アドレスを発生させる。

【００１３】（２）重複のない状態で、室外ユニット１Ａは、室内ユニット２Ａ１～２ＡＭの仮のアドレスを若い順に並べ替え、通し番号を付けて室内ユニットに送信し、室内ユニット２Ａ１～２ＡＭはそれぞれ正規の室内アドレスとしてアドレス記憶手段２４に格納する。同様にして、他のグループでもそれぞれ室内アドレス自動設定処理が行われる。

【００１４】次に室外ユニット１Ａ～１Ｍの室外アドレス自動設定、及び室外アドレスによる室内ユニットのグルーピングについて説明する。ここでは、グループＡの室外ユニット１Ａを例にとって説明する。（３）室外ユニット１Ａは室内ユニット２Ａ１～２ＡＭの自動アドレス設定が終了した後、仮の室外アドレスをランダム値発生手段１３により発生させ、仮の室外アドレスをアドレス記憶手段１４に記憶する。このとき、ランダムアドレス値は室外アドレスの取り得る範囲の４０００倍以上とする。（４）次に、記憶した仮の室外アドレスを、ユニット間バス伝送回路８Ａを介して接続している室内ユニット２Ａ１～２ＡＭに送信して、室内ユニット２Ａ１～２ＡＭのアドレス記憶手段２４に記憶させ、以後は室内ユニット２Ａ１～２ＡＭは同一室外アドレスまたは同一の仮の室外アドレスを有する室外ユニット１Ａとのみ通信できるようにグルーピング処理する。（５）グルーピング処理が終了すると、室外ユニット１Ａはシステムバス伝送回路９Ａ、システムバス４を介して他の室外ユニット１Ｂ～１Ｎと情報交換する。（６）室外ユニット１Ａは仮の室外アドレスをシステムバス伝送回路９Ａ介してシステムバス上に送信し、他の室外ユニット１Ｂ～１Ｎから送信される仮の室外アドレスが自分の仮の室外アドレスと重複していないことを確認する。もし重複があった場合はアドレス設定を中止し警報を発し、アドレスが重複する相手に別のランダム値を発生させる。同様にして、室外ユニット１Ａ以外の各室外ユニットも、それぞれ他の室外ユニットのランダムアドレスと重複していないことを確認する。

【００１５】（７）アドレスの重複がなければ、（８）室外ユニット１Ａ～１Ｎのうちアドレスの最も若い室外ユニットが親となり、親自身及び他の室外ユニットに対して若いアドレス順に、１、２、３・・・Ｎのごとく、新しく室外アドレスをナンバリングし直し、正規の室外アドレスとする。（９）グループＡにおいては、室外ユニット１Ａは、正規の室外アドレスを、ユニット間バス伝送回路８Ａを介して、各室内ユニット２Ａ１～２ＡＭに送信し、各室内ユニット２Ａ１～２ＡＭは室外ユニット１Ａの正規の室外アドレスをグループのアドレスとしてアドレス記憶手段２４に記憶する。したがって各室内ユニットは室外アドレスと室内アドレスとの２つのアドレスにより識別されることになる。上記同様の処理が、マルチ形空気調和機の他のグループＢ～Ｎにおいても行われる。以上のアドレス設定フローチャートを第４図に示す。

【００１６】以上説明したように、各グループ内の室内ユニットのアドレスを設定するときには、それぞれ当該グループのユニット間バスをシステムバスと分離するので、一グループ内の室内ユニットは他のグループのものとは分離して扱うことができ、複数グループのマルチ型空気調和機からなる大規模な空調空調システムにおいても、確実に短時間でアドレス設定を行うことができる。

【００１７】この自動アドレス設定動作は電源投入時に行われるが、すでにアドレスが確定している場合はランダムアドレスを発生させることなく確定したアドレスで自動アドレス動作を行う。

【００１８】なお、別のアドレス設定方法として、ランダムアドレスを発生させる代わりに室外制御装置６Ａ～６Ｎまたは室内制御装置５Ａ１～５ＮＭに記憶された製品固有の番号や室外制御装置６Ａ～６Ｎまたは室内制御

装置５Ａ１～５ＮＭに設けられた手動設定器の番号をアドレスとすることもできる。

【００１９】次に、他の実施の形態として複数の室外ユニット郡に複数の室内ユニット郡が接続されてなる大容量マルチ形空調システムを図５に示す。ここでは、室外ユニット３台と、室内ユニットＭ台とを接続してなる空調システムを示している。室外ユニット１Ａと室内ユニット２Ａ１～２ＡＭは、ユニット間バス３Ａで接続され、室外ユニット１Ａと室外ユニット１Ｂ～１Ｃは、システムバス４で接続されている。各室外ユニットは、図２に示す室外制御装置を、そして各室内ユニットは同図に示す室内制御装置を備えている。

【００２０】図５に示す空調システムにおける自動アドレス設定は、既に説明したのと同様である。すなわち、室外ユニット１Ａは、各室内ユニット２Ａ１～２ＡＭのランダム値発生手段により発生した仮のアドレスが重複していないかチェックし、重複のない状態にして仮のアドレスを正規のアドレスとして設定する。その後、各室外ユニット１Ａ～１Ｃは、それぞれ仮の室外アドレスをランダム値発生手段１３により発生させ、他の室外ユニットと情報交換し、互いに仮の室外アドレスが重複していないことを確認し、その後、室外ユニット１Ａ～１Ｃのうちの一つが親となり、親自身および他の室外ユニットに対して番号順に新しく室外アドレスをナンバリングし直し、正規の室外アドレスとする。室外ユニット１Ａは正規の室外アドレスを室内ユニット２Ａ１～２ＡＭに送信し、室内ユニット２Ａ１～２ＡＭは室外ユニット１Ａの正規の室外アドレスをアドレス記憶手段２４に記憶する。

【００２１】

【発明の効果】以上説明したように本発明によれば、複数グループのマルチ型空気調和機からなる大規模な空調システムにおいて、各室外ユニット及び各室内ユニットのアドレスを自動的に設定でき、人的なアドレス設定が不要となり、施工時間が短縮されかつ信頼性の良い空気調和機を提供できる。

【００２２】また、大規模な空調システムであっても、マルチ型空気調和機のグループ内のユニット間バスとグループ間のシステムバスとがアイソレーションされて、各グループ内の室内アドレスをグループ単独で設定し、該室内アドレスは互いに異なる室外アドレス（グループのアドレス）と組合せるので、アドレス重複の危険が分散され空調システムの品質が向上する。

【図面の簡単な説明】

【図１】本発明の空調システム全体の構成を示す図。

【図２】室外制御装置及び室内制御装置それぞれの構成を示すブロック図。

【図３】マルチ形空気調和機の冷凍サイクル構成図。

【図４】本発明にかかるアドレス設定方法のフローチャート。

【図５】室外機の一群と室内機の一群からなる大容量マルチ形空気調和機の空調システム例を示す図。

【符号の説明】

Ａ－Ｎ　マルチ形空気調和機
１Ａ－１Ｎ　室外ユニット
２Ａ１－２ＮＭ　室内ユニット
３Ａ－３Ｎ　ユニット間バス
４　システムバス
５Ａ１－５ＮＭ　室内ユニット制御装置
６Ａ－６Ｎ　室外ユニット制御装置
７　集中制御装置
８Ａ－８Ｎ　ユニット間バス伝送回路
９Ａ－９Ｎ　システムバス伝送回路

【図５】

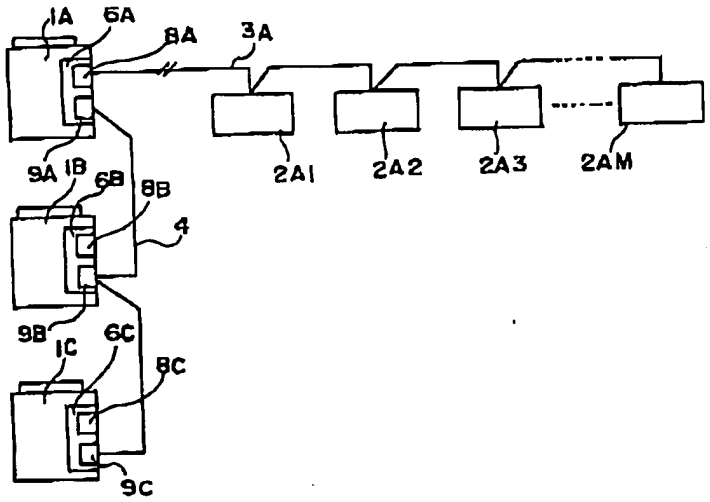

【図１】

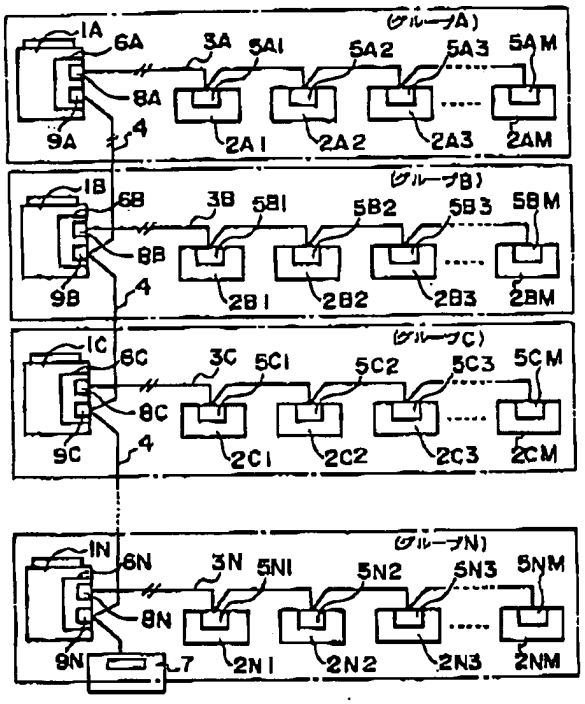
(グループA)
(グループB)
(グループC)
(グループN)
1A
1B
1C
1N
6A
6B
6C
6N
3A
3B
3C
3N
5A1
5A2
5A3
5AM
5B1
5B2
5B3
5BM
5C1
5C2
5C3
5CM
5N1
5N2
5N3
5NM
8A
8B
8C
8N
9A
9B
9C
9N
4
7
2A1
2A2
2A3
2AM
2B1
2B2
2B3
2BM
2C1
2C2
2C3
2CM
2N1
2N2
2N3
2NM
1A～1N：室外ユニット
2A1～2NM：室内ユニット
9A～9N：ユニット間バス
4：システムバス
7：集中制御装置

【図２】

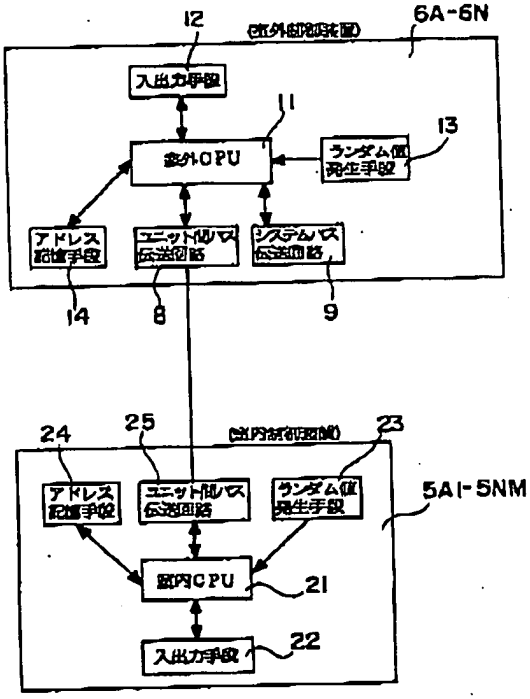
12
(室外制御装置)
6A-6N
入出力手段
11
室外CPU
13
ランダム値発生手段
アドレス記憶手段
ユニット間バス伝送回路
システムバス伝送回路
14
8
9
24
25
(室内制御回路)
23
アドレス記憶手段
ユニット間バス伝送回路
ランダム値発生手段
5A1-5NM
室内CPU
21
入出力手段
22

【図３】

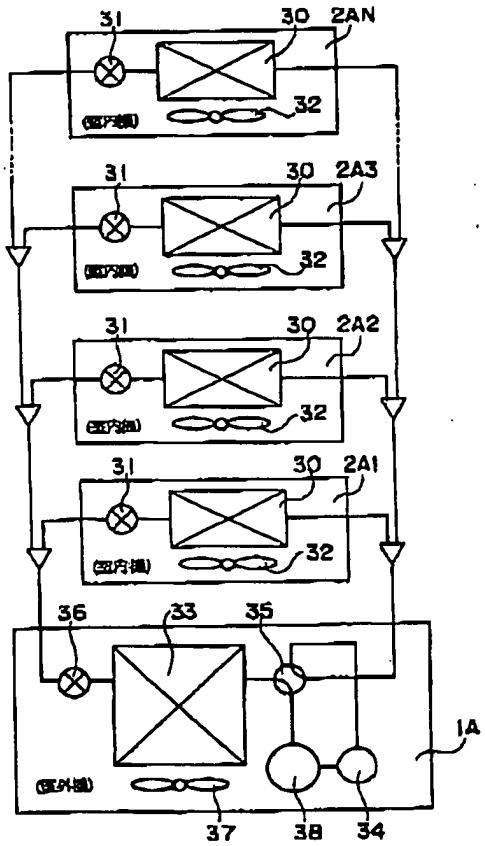
31
30
2AN
32
(室内機)
2A3
2A2
2A1
36
33
35
1A
(室外機)
37
38
34

【図４】

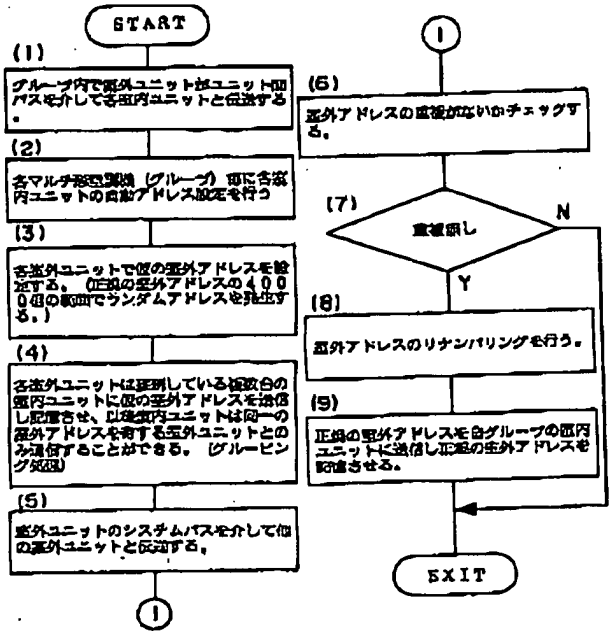
START
(1)
グループ内で室外ユニット及ユニット間バスを介して各室内ユニットと伝送する。
(2)
各マルチ形空調機（グループ）毎に各室内ユニットの固有アドレス設定を行う
(3)
各室外ユニットで仮の室外アドレスを設定する。（正規の室外アドレスの４０００個の範囲でランダムアドレスを発生する。）
(4)
各室外ユニットは接続している複数台の室内ユニットに仮の室外アドレスを送信し記憶させ、以後室内ユニットは同一の室外アドレスを有する室外ユニットとのみ通信することができる。（グルーピング処理）
(5)
室外ユニットのシステムバスを介して他の室外ユニットと伝送する。
1
1
(6)
室外アドレスの重複がないかチェックする。
(7)
重複有し
N
Y
(8)
室外アドレスのリナンバリングを行う。
(9)
正規の室外アドレスを各グループの室内ユニットに送信し正規の室外アドレスを記憶させる。
EXIT

フロントページの続き

(72)発明者 ▲吉▼田 悟
東京都千代田区神田駿河台四丁目６番地
株式会社日立製作所空調システム事業部内
(72)発明者 渡辺 昌志
静岡県清水市村松390番地 日立清水エンジニアリング株式会社内
(72)発明者 望月 正道
東京都千代田区神田駿河台四丁目６番地
株式会社日立製作所空調システム事業部内

Ｆターム(参考) 3L060 AA01 AA08 CC19 DD05 EE01
3L061 BA04
3L092 GA05 GA12 JA09

PATENT ABSTRACTS OF JAPAN

(11)Publication number : 05-175965
(43)Date of publication of application : 13.07.1993

(51)Int.Cl. H04L 12/28

(21)Application number : 03-337066
(22)Date of filing : 19.12.1991

(71)Applicant : HITACHI CABLE LTD
(72)Inventor : SETO KOICHIRO
KASAI KATSUHIRO
EBE HIDEKAZU

(54) MULTI-PORT REPEATER AND NETWORK MANAGEMENT STATION

(57)Abstract:
PURPOSE: To manage the configuration of network segments and to detect station addresses in duplicate through the use of the multiport repeater.
CONSTITUTION: Multi-port repeaters 101-103 store all addresses of sender stations for frames reached to each input port within a definite time and a final arrival time of a frame from each sender station to a memory and the information is sent to a network management station 121 according to a prescribed protocol. The network management station 121 collects the information from all the multi-port repeaters in a network segment and obtains the configuration information of the network segments in details through inference and detects station addresses in duplicate.

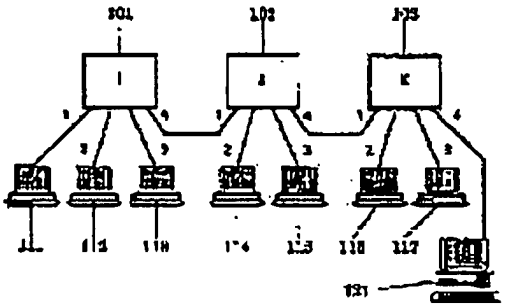

(19)日本国特許庁（ＪＰ）　(12) 公開特許公報（Ａ）　(11)特許出願公開番号

特開平5－175965

(43)公開日　平成５年(1993)７月13日

(51)Int.Cl.⁵	識別記号	庁内整理番号	ＦＩ	技術表示箇所
Ｈ０４Ｌ　12/28				
		8948－5K	Ｈ０４Ｌ　11/00　　３１０　Ｚ	

審査請求　未請求　請求項の数３（全　５　頁）

(21)出願番号　特願平3－337066

(22)出願日　平成３年(1991)12月19日

(71)出願人　000005120
日立電線株式会社
東京都千代田区丸の内二丁目１番２号

(72)発明者　瀬戸　康一郎
茨城県日立市日高町５丁目１番１号　日立電線株式会社オプトロシステム研究所内

(72)発明者　笠井　克洋
茨城県日立市日高町５丁目１番１号　日立電線株式会社オプトロシステム研究所内

(72)発明者　江部　秀和
茨城県日立市日高町５丁目１番１号　日立電線株式会社オプトロシステム研究所内

(74)代理人　弁理士　絹谷　信雄

(54)【発明の名称】　マルチポート中継装置及びネットワーク管理ステーション

(57)【要約】

【目的】　マルチポート中継装置を用いて、ネットワークセグメントの構成管理及び局アドレスの重複検出を行うことを可能とする。

【構成】　マルチポート中継装置１０１～１０３が、有限時間内に各入力ポートに到着したフレームの送信元局の全てのアドレス及び各送信元局からのフレームの最終到着時刻をメモリに保持し、これらの情報を一定のプロトコルに従ってネットワーク管理ステーションに送信する。ネットワーク管理ステーションは、ネットワークセグメント内の全てのマルチポート中継装置より上記の情報を収集し、これらの情報を元に、より詳細なネットワークセグメントの構成情報を推論により得ると共に、重複する局アドレスの検出を行う。

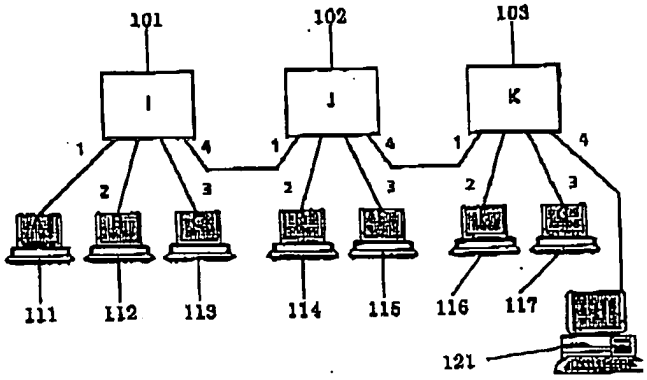

【特許請求の範囲】

【請求項1】 複数の入力ポートと該入力ポートと対になる出力ポートとを有してなり、有限時間内に各入力ポートに到着したフレームの全ての送信元局アドレス及び各送信元局からのフレームの最終到着時刻を保持しておく手段と、これらの情報を一定のプロトコルに従ってネットワーク管理ステーションに送信する手段とを具備することを特徴とするマルチポート中継装置。

【請求項2】 複数の請求項1記載のマルチポート中継装置より得た情報を元に、より詳細なネットワークセグメント内のネットワーク構成を推論する手段を具備することを特徴とするネットワーク管理ステーション。

【請求項3】 複数の請求項1記載のマルチポート中継装置より得た情報を元に、より詳細なネットワークセグメント内のネットワーク構成を推論する手段及び、局アドレスの重複を検出する手段を具備することを特徴とするネットワーク管理ステーション。

【発明の詳細な説明】

【0001】

【産業上の利用分野】本発明は、ネットワークの構成装置であるマルチポート中継装置及びそれを用いたネットワーク管理システムに関するものである。

【0002】

【従来の技術】マルチポート中継装置における管理情報の規格として "IEEE802.3K Layer Management for Hub Devices"が広く知られている。この規格においては、各マルチポート中継装置において保持しておくべき情報として、各ポートが最後に受信した読取り可能なフレームの送信元ＭＡＣアドレス（ラスト・ソース・アドレス：Last Source Address)を規定している。また、この情報に関する付帯情報として、ラスト・ソース・アドレスの値が変わった回数（ソース・アドレス・チエンジズ：Source Address Changes）を規定している。

【0003】ネットワークワーク管理ステーションは、これらの情報を得るため、マルチポート中継装置に対して問い合わせを行う。

【0004】

【発明が解決しようとする課題】しかしながら、以上に特徴を述べたIEEE802.3Kの規格に基づいたネットワーク管理システムには、以下の問題がある。

【0005】（1）マルチポート中継装置の各ポートにおいて最後に受信したフレームの送信元アドレスしか保持していないため、ポートの先に特定の端末局ではなく、複数の端末局を含むネットワークセグメントを接続する場合、このネットワークセグメントに接続されている端末局の送信元局のアドレス全てを保持することができず、ポートに到着したフレームの全ての送信元局のアドレスをネットワーク管理ステーションにおいて得ることができない。このため、ネットワーク管理ステーション[illegible]の構成を管理することができない。

【0006】（2）局をネットワークに接続する際に使用する接続装置には通常世界中において重複のない固有のアドレスが与えられる。しかし実際には重複する局アドレスを持つ接続装置が製造されることがあり、そのような接続装置がネットワークセグメント内に存在する場合、局アドレスに対応する局を特定することができず、正しい伝送が行えない。現状ではこの重複アドレスを検出する手段がない。

【0007】そこで、本発明の目的は、マルチポート中継装置を用いて、ネットワークセグメントの構成管理を行う手段、更には、マルチポート中継装置を用いて、ネットワークセグメントの構成管理及び局アドレスの重複検出を行う手段を提供することである。

【0008】

【課題を解決するための手段】上記目的を達成するため、本発明のマルチポート中継装置は、有限時間内に各入力ポートに到着したフレームの送信元局の全てのアドレス及び各送信元局からのフレームの最終到着時刻を保持しておく手段と、これらの情報を一定のプロトコルに従ってネットワーク管理ステーションに送信する手段とを具備する（請求項1）。

【0009】また、本発明のネットワーク管理ステーションは、複数の上記マルチポート中継装置より得た情報を元に、より詳細なネットワークセグメント内のネットワーク構成を推論する手段を具備する（請求項2）。また、このネットワーク管理ステーションは、更に、局アドレスの重複を検出する手段を具備する（請求項3）。

【0010】

【作用】マルチポート中継装置において、各入力ポートに到着したフレームの全ての送信元局アドレス及び各送信元局からのフレームの最終到着時刻を保持しておく。ネットワーク管理ステーションは、ネットワークセグメント内の全てのマルチポート中継装置より上記の情報を収集し、これらの情報を元に、より詳細なネットワークセグメントの構成情報を推論により得るものである。即ち、ネットワークセグメント内のマルチポート中継装置が保持しているこれらの情報を、必要に応じてネットワーク管理ステーションにおいて収集することにより、ネットワーク管理ステーションにおいて、各マルチポート中継装置の各入力ポートに到着したフレームの送信元局アドレス及びこれらフレームの最終到着時刻を得ることができ、これを元に、ネットワークセグメント内のネットワーク構成を推論することが可能であり、更には、重複する局アドレスの検出を行うことが可能である。

【0011】

【実施例】以下、本発明の一実施例を添付図面に基づいて詳述する。

【0012】本実施例の説明においては、IEEE802.3Typ[illegible]10BASE-T規格に準拠したハブを、マルチポート中継装

置の例として用いる。

【0013】図1に本発明が利用されるシステムの基本的な構成例を示す。このシステムは、4つの入力ポートを持つ10BASE-Tハブ101，102，103をカスケード状に接続し、カスケード接続に使用していないポートにパソコンやワークステーションなどにより構成する端末局111，112，113，114，115，116，117及びネットワーク管理ステーション121を接続して、1つのネットワークセグメントを構成したものである。

【0014】ここでは説明のために、ハブのポート番号を左から第1ポート，第2ポート，第3ポート，第4ポートと呼ぶものとする。また、ハブに接続された端末局111，112，113，114，115，116，117のMACアドレスをそれぞれA，B，C，D，E，F，Gとし、ネットワーク管理ステーション121のMACアドレスをH、10BASE-Tハブ101，102，103のMACアドレスをそれぞれI，J，Kとする。

【0015】10BASE-Tハブ101，102，103は、有限時間内に各入力ポートに到着したフレームの送信元局の全てのアドレス及び各送信元局からのフレームの最終到着時刻を保持しておく手段、及び、これらの情報を一定のプロトコルに従ってネットワーク管理ステーションに送信する手段として、マイクロプロセッサとメモリを有する。即ち、10BASE-Tハブ101，102，103は、このマイクロプロセッサとメモリの働きにより、各入力ポートに到着したフレームの送信元局MACアドレスを読み込み、このアドレスをメモリに格納したり、メモリ内に格納されているアドレスとの比較等を行うことができる。ここでは、これらのハブは、各入力ポートに到着したフレームの送信元局MACアドレスを〈入力ポート番号，送信元局MACアドレス，最終到着時刻〉といった構成のエントリとして保持するものとする。

【0016】図2に、10BASE-Tハブ101，102，103のエントリ管理動作例の流れ図を示す。任意の入力ポートにフレームが到着すると、到着したフレーム送信元局MACアドレスを読み込む（図2中のステップ202，203）。同一入力ポートのエントリについて、送信元局MACアドレスの照合を行い（図中ステップ204）、同一の送信元局MACアドレスのエントリが存在する場合、このエントリの到着時刻を更新する（図中ステップ206）。もしも、同一の送信元局MACアドレスのエントリが存在しない場合には、新たにエントリを作成する（図中ステップ207）。

【0017】上記のような10BASE-Tハブ101，102，103の働きにより、ネットワークセグメント内の端末局111，112，113，114，115，116，117、ネットワーク管理ステーション121及び10BASE-Tハブ101，102，103の通信の結果、10ようなエントリ〈入力ポート番号，送信元局MACアドレス，最終到着時刻〉を得る。

【0018】〔ハブ101の場合〕
〈1，A，t1〉，〈2，B，t2〉，〈3，C，t3〉，〈4，D，t4〉，〈4，E，t5〉，〈4，F，t6〉，〈4，G，t7〉，〈4，H，t8〉，〈4，J，t10〉，〈4，K，t11〉
〔ハブ102の場合〕
〈1，A，t1〉，〈1，B，t2〉，〈1，C，t3〉，〈1，I，t9〉，〈2，D，t4〉，〈3，E，t5〉，〈4，F，t6〉，〈4，G，t7〉，〈4，H，t8〉，〈4，K，t11〉
〔ハブ103の場合〕
〈1，A，t1〉，〈1，B，t2〉，〈1，C，t3〉，〈1，D，t4〉，〈1，E，t5〉，〈1，I，t9〉，〈1，J，t10〉，〈2，F，t6〉，〈3，G，t7〉，〈4，H，t8〉
ネットワーク管理ステーション121は、上記複数のマルチポート中継装置たる10BASE-Tハブより得た情報を元に、より詳細なネットワークセグメント内のネットワーク構成を推論する手段を具備する。即ち、ネットワーク管理ステーション121は、10BASE-Tハブ101，102，103とネットワークを介して通信を行い、エントリを収集する。そして、これらのエントリを元にネットワーク構成の推論を行う。

【0019】本例においては、10BASE-Tハブ101における〈4，J，t10〉，〈4，K，t11〉のエントリより、第4ポートの先にMACアドレスJ，K，の10BASE-Tハブ102，103が接続されていることが推定できる。同様に、10BASE-Tハブ102における〈1，I，t9〉，〈4，K，t11〉のエントリより、10BASE-Tハブ102の第1ポートの先にMACアドレスIの10BASE-Tハブ101が、第4ポートの先にMACアドレスKの10BASE-Tハブ103が接続されていることが推定でき、10BASE-Tハブ103における〈1，I，t9〉，〈1，J，t10〉のエントリより、10BASE-Tハブ103の第1ポートの先にMACアドレスI，Jの10BASE-Tハブ101，103が接続されていることが推定できる。

【0020】これらの推定を総合することにより、10BASE-T101，102，103の関係を図3のように推定することができる。更に、各10BASE-Tハブのその他のエントリにより、各ハブ接続する端末局の構成を推定することができる。

【0021】また、端末局の接続構成が変化して、一つの10BASE-Tハブにおいて同一の送信元局MACアドレスを含むエントリが存在するが場合、最終到着時刻が最新のエントリを元に推論を行うことにより、最新のネットワークセグメントの構成を推定することができる。

【0022】次に、本発明が利用されるシステムにおい

ここでのネットワーク管理ステーション421は、上記と同様の複数の10BASE-Tハブ401，402，403より得た情報を元にネットワークセグメント内のネットワーク構成を推論する手段を有すると共に、更に、局アドレスの重複を検出する手段を具備する。

【0023】図4において、端末局411～417のうち、端末局412と端末局416のMACアドレスが共にBであり、局アドレスが重複している。この場合、10BASE-Tハブ401，402，403は以下のようなエントリを得る。

【0024】［ハブ401の場合］
{1，A，t1}，{2，B，t2}，{3，C，t3}，{4，D，t4}，{4，E，t5}，{4，B，t6}，{4，G，t7}，{4，H，t8}，{4，J，t10}，{4，K，t11}
［ハブ402の場合］
{1，A，t1}，{1，B，t2}，{1，C，t3}，{1，I，t9}，{2，D，t4}，{3，E，t5}，{4，B，t6}，{4，G，t7}，{4，H，t8}，{4，K，t11}
［ハブ403の場合］
{1，A，t1}，{1，B，t2}，{1，C，t3}，{1，D，t4}，{1，E，t5}，{1，I，t9}，{1，J，t10}，{2，B，t6}，{3，G，t7}，{4，H，t8}

上記のエントリから、重複するMACアドレスの検出を行う。重複がない場合は、どのハブのエントリの中でも同一アドレスが含まれることはないことから、各ハブのエントリ内に同一MACアドレスの重複が存在するものがあるかどうかを検査する。本例においては、例えばハブ401に{2，B，t2}，{4，B，t6}なるMACアドレスの重複するエントリが存在することによりMACアドレスの重複を検出することができる。このようにMACアドレスの重複が存在する場合は、直ちにネットワーク管理者に警告を発行することができる。

【0025】

【発明の効果】以上要するに、本発明のマルチポート中継装置及びネットワーク管理ステーションを用いることにより、ネットワーク管理ステーションにおいて、ネットワークセグメント内の構成を推定でき、ネットワークの構成管理を容易に行うことが可能となる。また、ネットワークセグメント内の重複する局アドレスの検出も可能となる。

【図面の簡単な説明】

【図1】本発明が利用されるネットワークの構成を示す図である。

【図2】本発明にて各マルチポート中継装置が行うプロセスの一例を示す流れ図である。

【図3】本発明により、ネットワーク管理ステーションにおいて得られるネットワークの構成の推定例を示す図である。

【図4】本発明が利用される重複が存在する場合のネットワークの構成例を示す図である。

【符号の説明】
101～103，401～403　10BASE-Tハブ（マルチポート中継装置）
111～117，411～417　端末局
121，421　ネットワーク管理ステーション
A～G　端末局のMACアドレス
I，J，K　10BASE-TハブのMACアドレス

【図1】

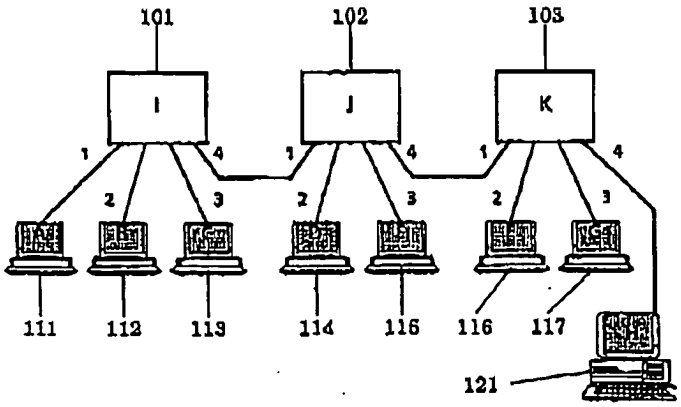

【図3】

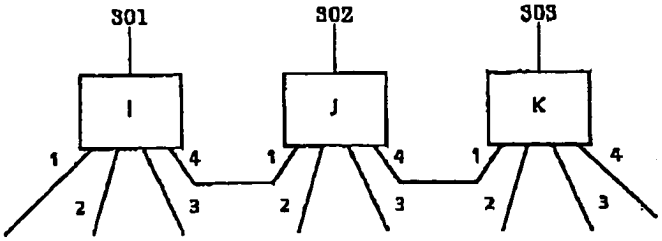

【図2】

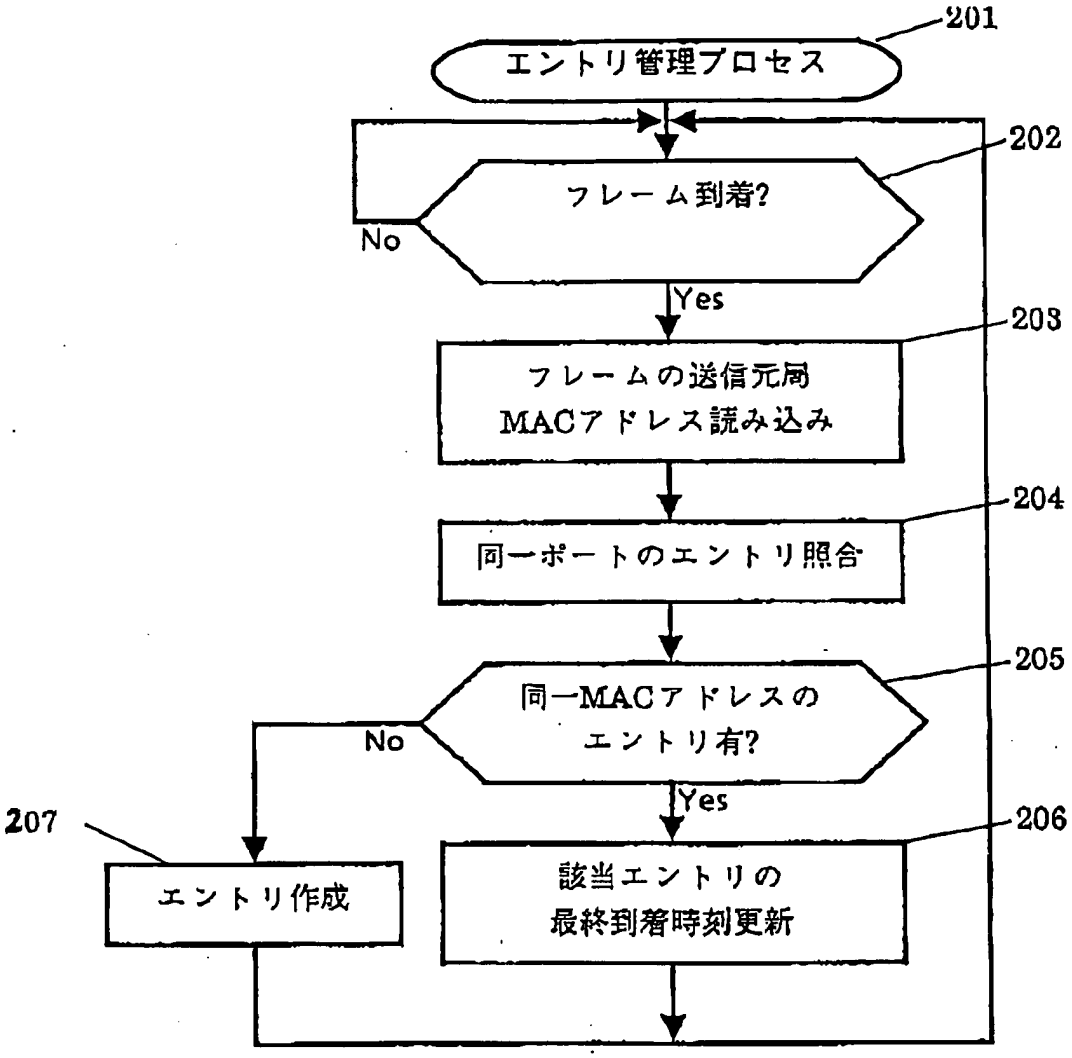
201
エントリ管理プロセス
202
フレーム到着?
No
Yes
203
フレームの送信元局
MACアドレス読み込み
204
同一ポートのエントリ照合
205
同一MACアドレスの
エントリ有?
No
Yes
206
該当エントリの
最終到着時刻更新
207
エントリ作成

【図4】

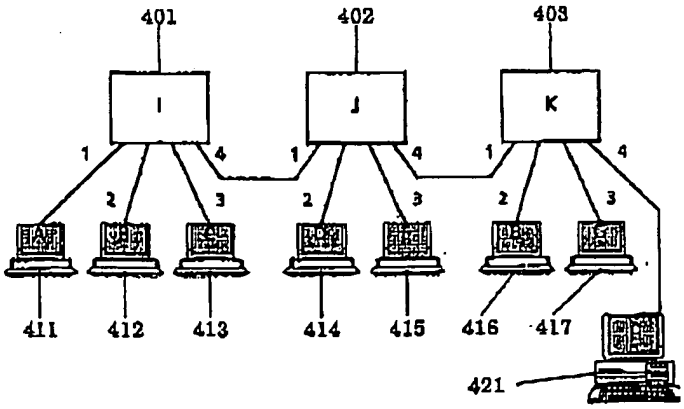
401
402
403
I
J
K
1
2
3
4
411
412
413
414
415
416
417
421

PATENT ABSTRACTS OF JAPAN

(11)Publication number : 2004-356754
(43)Date of publication of application : 16.12.2004

(51)Int.Cl. H04L 12/28

(21)Application number : 2003-149659
(22)Date of filing : 27.05.2003

(71)Applicant : NKE CORP
(72)Inventor : ADACHI YASUNOBU
FUKUTANI YASUHIDE
TAMOI YUKITERU
KANEDA HIDEO

(54) TRANSMISSION SYSTEM AND TRANSMISSION APPARATUS

(57)Abstract:
PROBLEM TO BE SOLVED: To provide a transmission system capable of easily setting addresses of a plurality of apparatuses associated with one another on a network.
SOLUTION: A gateway apparatus 100 sets its own IP address by using a switch installed in its own apparatus. The gateway apparatus 100 calculates an IP address of a destination by selecting the destination IP address equal to (own IP address +1) when the own IP address is an odd number and the destination IP address equal to (own IP address −1) when the own IP address is an even number. Then the gateway apparatus 100 uses the calculated destination IP address to transmit information to the destination.

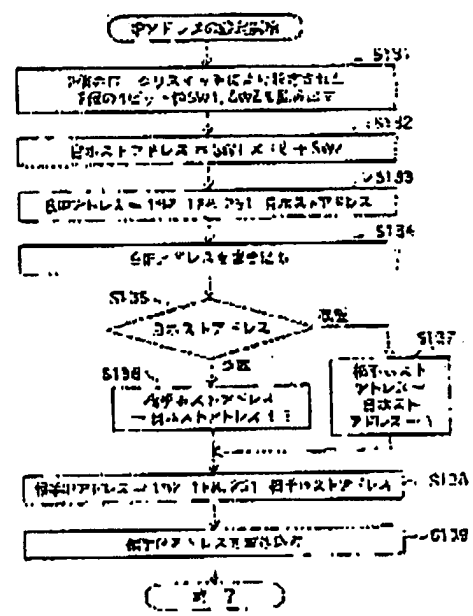

(19)日本国特許庁(JP)　(12)公開特許公報(A)　(11)特許出願公開番号
特開2004-356754
(P2004-356754A)
(43)公開日 平成16年12月16日(2004.12.16)

(51)Int.Cl.⁷	F I			テーマコード（参考）
H04L 12/28	H04L	12/28	200A	5K033
	H04L	12/28	100S	
	H04L	12/28	203	

審査請求 有　請求項の数 5　OL　（全 18 頁）

(21)出願番号　特願2003-149659 (P2003-149659)
(22)出願日　平成15年5月27日 (2003.5.27)

(71)出願人　592127965
ＮＫＥ株式会社
京都市西京区樫原畔ノ海道１０番地の８７
(74)代理人　100090446
弁理士　中島　司朗
(72)発明者　足立　康信
京都府長岡京市馬場図所２７　ＮＫＥ株式会社内
(72)発明者　福谷　康英
京都府長岡京市馬場図所２７　ＮＫＥ株式会社内
(72)発明者　田茂井　幸輝
京都府長岡京市馬場図所２７　ＮＫＥ株式会社内

最終頁に続く

(54)【発明の名称】伝送システム及び伝送装置

(57)【要約】
【課題】対応付けされた複数の装置のネットワーク上のアドレスを容易に設定することができる伝送システムを提供する。
【解決手段】ゲートウェイ装置１００は、実装されているスイッチで自らのＩＰアドレスを設定する。次に、自ＩＰアドレスが奇数の場合、相手先ＩＰアドレス＝自ＩＰアドレス＋１とし、自ＩＰアドレスが偶数の場合、相手先ＩＰアドレス＝自ＩＰアドレス－１とすることにより、相手先のＩＰアドレスを算出する。次に、算出した相手先のＩＰアドレスを用いて、相手先に対して情報を送信する。
【選択図】　図６

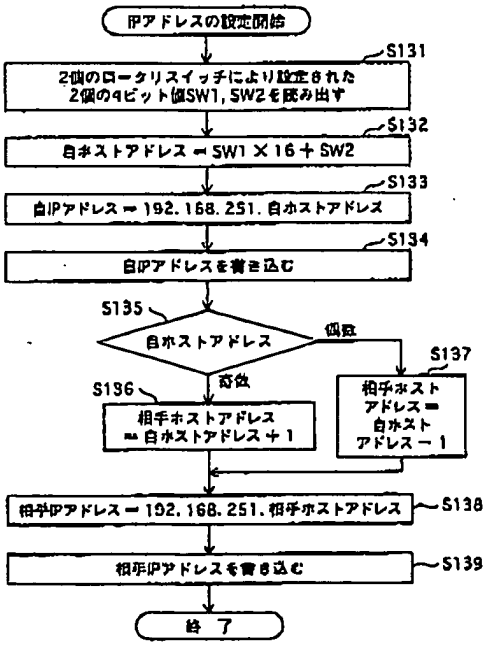

【特許請求の範囲】
【請求項１】
対応する第１及び第２アドレスによりネットワーク上の位置がそれぞれ示される第１及び第２伝送装置の間で、ネットワークを介して、通信を行う伝送システムであって、
前記第１伝送装置は、
第１アドレスを記憶している記憶手段と、
前記第１アドレスに基づいて、対応する第２アドレスを取得する取得手段と、
送信先アドレスとして第２アドレスが付加された伝送データをネットワークを介して送出する送出手段とを備え、
前記第２伝送装置は、
第２アドレスを記憶している記憶手段と、
前記第２アドレスに基づいて、対応する第１アドレスを取得する取得手段と、
送信先アドレスとして第１アドレスが付加された伝送データをネットワークを介して送出する送出手段とを備える
ことを特徴とする伝送システム。
【請求項２】
対応する第１及び第２アドレスによりネットワーク上の位置がそれぞれ示される伝送装置及び受信装置の間で、ネットワークを介して、通信を行う伝送システムにおける前記伝送装置であって、
第１アドレスを記憶している記憶手段と、
前記第１アドレスに基づいて、対応する第２アドレスを取得する取得手段と、
送信先アドレスとして第２アドレスが付加された伝送データをネットワークを介して送出する送出手段と
を備えることを特徴とする伝送装置。
【請求項３】
対応する第１及び第２アドレスは、隣接する値を有し、
前記取得手段は、前記第１アドレスが偶数であるか又は奇数であるかを判断し、偶数であると判断する場合に、前記第１アドレスから１を減じた値を第２アドレスとして取得し、奇数であると判断する場合に、前記第１アドレスに１を加えた値を第２アドレスとして取得する
ことを特徴とする請求項２に記載の伝送装置。
【請求項４】
対応する第１及び第２アドレスによりネットワーク上の位置がそれぞれ示される伝送装置及び受信装置の間で、ネットワークを介して、通信を行う伝送システムにおける前記伝送装置で用いられる伝送プログラムであって、
前記伝送装置は、第１アドレスを記憶している記憶手段を備えており、
前記伝送プログラムは、
前記第１アドレスに基づいて、対応する第２アドレスを取得する取得ステップと、
送信先アドレスとして第２アドレスが付加された伝送データをネットワークを介して送出する送出ステップと
を含むことを特徴とする伝送プログラム。
【請求項５】
対応する第１及び第２アドレスによりネットワーク上の位置がそれぞれ示される伝送装置及び受信装置の間で、ネットワークを介して、通信を行う伝送システムにおける前記伝送装置で用いられる伝送方法であって、
前記伝送装置は、第１アドレスを記憶している記憶手段を備えており、
前記伝送方法は、
前記第１アドレスに基づいて、対応する第２アドレスを取得する取得ステップと、
送信先アドレスとして第２アドレスが付加された伝送データをネットワークを介して送出

を含むことを特徴とする伝送方法。

【発明の詳細な説明】

【０００１】

【発明の属する技術分野】

本発明は、ネットワークにより接続された伝送装置間で通信を行う技術に関する。

【０００２】

【従来の技術】

従来より、離れた場所に設置されている２台の装置を信号線路により接続することにより、装置間で信号の伝達が行われている。

例えば、ビルなどの高層建築物の各階に空調設備が設置され、管理階に中央監視装置が設置され、各空調設備と中央監視装置との間は、ビル内に配された信号線路で結合される。中央監視装置は、各信号線路を介して、各空調設備との間で信号の伝達を行うことにより、各空調設備を集中的に管理する。この場合には、接続される装置の組み合わせは予め決まっている。空調設備が接続される相手は、中央監視装置である。このように、特定の装置には、他の特定の装置が接続される場合が多い。

【０００３】

特許文献１によると、制御部と前記制御部から離れた位置に設けられた被制御部とを直列の信号を伝送する信号線路で接続された直並列変換形遠隔制御方式が開示されている。前記制御部は、電源が外部から供給され、クロックパルス列を生成する手段と、前記被制御部に接続された多数の機器を制御する制御情報に基づく直列の制御信号を発生する回路と、前記制御信号のスタート信号を生成すると共に前記直列の制御信号と前記クロックパルス列及び前記電源が入力され、クロックパルスに同期して制御信号の各２値信号の値に対応して地気か電源電圧の中間の電圧を発生し、クロックパルスと次のクロックパルスの間は、電源電圧となる信号を発生して前記信号線に３値の電圧レベルを持つ信号を出力する信号変換手段とを備える。前記被制御部は、電源を外部から供給されず、前記信号線に接続されて前記信号線のクロック信号と２値の制御信号を除去して被制御部の各部を駆動するための電源電圧を生成する電源生成回路と、前記スタート信号を検出するスタート信号検出手段と、前記信号線上の信号から前記クロックパルスと前記直列の２値の制御情報を取り出す信号抽出手段と、前記スタート信号及びクロックパルスに応答して被制御部の各機器に供給される２値の各制御信号の位置を表す信号を順に発生する信号分配手段、及び前記信号抽出手段から供給される前記２個の各制御信号を前記信号分配手段からの位置を表す信号に基づいて先頭から順に保持する保持手段と、前記各保持手段の出力に応じて前記各機器の状態を前記電源電圧を用いて並列に駆動する出力手段を備える。こうして、制御部から制御信号とクロック信号と電源を同一の線路で伝送し、被制御部でこれらの信号を抽出するとともに、電源を生成することにより配線の本数を減らしている。なお、特許文献２及び特許文献３は、特許文献１と同様の技術を開示している。

【０００４】

また、特許文献４によると、通信網を介して、設備機器、該設備機器を監視制御するための設備制御機器、情報通信制御機器及び情報通信端末機器が接続されている監視制御装置が開示されている。前記設備制御機器が、伝送線を介して設備機器との情報データ信号の送受信を行うことにより、設備機器の監視及び制御を行う。これにより、設備機器と中央監視制御装置とを接続する配線と、ＬＡＮにおける配線とを共有させ、配線量及びそれに伴う工事を減少させている。

【０００５】

しかし、特許文献４に開示された技術によると、伝送装置にＩＰ（Ｉｎｔｅｒｎｅｔ Ｐｒｏｔｏｃｏｌ）アドレスを設定するためには、パソコンなどの制御端末を伝送装置毎に接続する必要があり、このパソコンの接続作業が煩わしいという問題点がある。

この問題点を解決するために、特許文献５によると、通信アドレスをスイッチの情報によって設定する技術が開示されている。スイッチは、８個の４ビットのロータリスイッチに

カードに実装されるアプリケーションは、スイッチの値を読み取り、スイッチの値に基づいて、ＬＡＮコントローラのＩＰアドレスやＯＳＩプロトコル通信に使用するＮＳＡＰ等の通信アドレスを算出し、ＬＡＮカードは、算出されたＩＰアドレスやＮＳＡＰアドレスをＬＡＮコントローラに割り当てる。これにより、アドレスの設定が容易になる。

【０００６】
【特許文献１】第２６３７９９２号特許公報
【０００７】
【特許文献２】第２７２３２３２号特許公報
【０００８】
【特許文献３】第２７６０３８２号特許公報
【０００９】
【特許文献４】特開平６－７８３６１号公報
【００１０】
【特許文献５】特開２００１－３３９３９２号公報
【００１１】
【発明が解決しようとする課題】
しかしながら、特定の装置には、他の特定の装置が接続されるなど、接続される装置の組み合わせが予め決まっている場合には、その対応付けのための設定をしなければならず、この作業が煩わしいという問題点がある。
本発明は、上記の問題点を解決するために、対応付けされた複数の装置のネットワーク上のアドレスを容易に設定することができる伝送システム、伝送装置、伝送方法、伝送プログラムを提供することを目的とする。
【００１２】
【課題を解決するための手段】
上記の目的を達成するために、本発明の伝送装置は、接続された入出力機器の情報を、ネットワークを介して特定の他の装置に接続された入出力機器に対して、所定の通信プロトコルに従って、伝送する。前記伝送装置は、ネットワークを介したデータ通信を制御する通信制御手段と、通信制御手段の通信アドレスを決めるための所定の情報を記憶する記憶手段と、記憶手段に記憶された情報を読み出す読み出し手段と、読み出し手段によって読み出された情報に基づいて、通信手段の通信アドレスを算出する算出手段と、算出手段によって算出された通信アドレスを通信制御手段の通信アドレスとして設定する設定手段と、通信アドレスから一意に求められる通信相手先アドレスを算出する算出手段と、算出手段によって算出された通信相手先アドレスを通信制御手段の通信アドレスとして設定する設定手段とを備える。
【００１３】
ここで、前記記憶手段は複数のスイッチにより構成され、各スイッチの状態により情報が記憶され、伝送装置における自らのＩＰアドレスなどの通信アドレスが、伝送装置内に実装されたスイッチにより設定される。設定されたＩＰアドレスなどの通信アドレスに基づいて、定められた演算方法に基づき通信相手先ＩＰアドレスなどを算出する。
【００１４】
例えば、
▲１▼伝送装置に実装されているスイッチで自らのＩＰアドレスを設定する。
▲２▼自ＩＰアドレスが奇数の場合、相手先ＩＰアドレス＝自ＩＰアドレス＋１とし、自ＩＰアドレスが偶数の場合、相手先ＩＰアドレス＝自ＩＰアドレス－１とすることにより、相手先のＩＰアドレスを算出する。
▲３▼算出した相手先のＩＰアドレスを用いて、相手先に対して情報を送信する。
【００１５】
このように、本発明によれば、自ＩＰアドレスを設定するだけで、相手先のＩＰアドレスを算出するので、ネットワークに接続された装置間で簡単に一対一の通信が行なえる。

【発明の実施の形態】
本発明に係る１個の実施の形態としてのビル空調管理システム１０について説明する。
１．ビル空調管理システム１０
ビル空調管理システム１０は、図１に示すように、ゲートウェイ装置１００、２００、センサーターミナルユニット３００、３０１、３０２、パワーターミナルユニット４００、４０１、４０２、管理制御盤５００、５台の空調設備６０１、６０２、・・・、６０５、温度センサ５１１、５１２及びＨＵＢユニット２１、２２、２３から構成される。
【００１７】
ビル空調管理システム１０は、高層ビル内に設けられ、ビル内の気温、湿度、換気などを管理制御するシステムである。
ＨＵＢユニット２１、２２、２３は、それぞれスイッチングハブであり、ＨＵＢユニット２２、２３は、それぞれ、接続線３１、３２を介して、ＨＵＢユニット２１に接続され、ゲートウェイ装置１００、２００は、それぞれ、接続線３３、３４を介して、ＨＵＢユニット２２、２３に接続されている。ここで、接続線３１、３２、３３、３４は、一例として、シールド付きのツイストペアケーブルである。ＨＵＢユニット２１、２２、２３及びゲートウェイ装置１００、２００は、第１のネットワークを構成している。第１のネットワークでは、第１の通信プロトコルが用いられる。第１の通信プロトコルは、具体的には、Ｉｎｔｅｒｎｅｔ　Ｐｒｏｔｏｃｏｌである。
【００１８】
また、ゲートウェイ装置１００、センサーターミナルユニット３００、３０１及びパワーターミナルユニット４０２は、それぞれ、接続線４１を介して、接続されている。ゲートウェイ装置１００、センサーターミナルユニット３００、３０１及びパワーターミナルユニット４０２は、第２のネットワークを構成している。管理制御盤５００は、５個のスイッチ５０１、５０２、・・・、５０５及び表示部６１１、６１２を内蔵しており、スイッチ５０１、５０２及び５０３は、センサーターミナルユニット３００に接続されており、スイッチ５０４及び５０５は、センサーターミナルユニット３０１に接続されており、表示部６１１及び６１２は、パワーターミナルユニット４０２に接続されている。
【００１９】
また、ゲートウェイ装置２００、パワーターミナルユニット４００、４０１、センサーターミナルユニット３０２は、接続線５１を介して、接続されており、ゲートウェイ装置２００、パワーターミナルユニット４００、４０１、センサーターミナルユニット３０２は、第３のネットワークを構成している。また、空調設備６０１、６０２及び６０３は、パワーターミナルユニット４００に接続されており、空調設備６０４及び６０５は、パワーターミナルユニット４０１に接続されており、温度センサ５１１及び５１２は、センサーターミナルユニット３０２に接続されている。
【００２０】
上述の第２のネットワーク及び第３のネットワークでは、第２の通信プロトコルが用いられる。第２の通信プロトコルは、特許文献１、特許文献２及び特許文献３により開示されている通信プロトコルである。
ここで、ゲートウェイ装置１００及び２００は、一対一に、対応しており、利用者により、それぞれ、一例として、ＩＰアドレス「１９２．１６８．２５１．２」及び「１９２．１６８．２５１．３」が割り当てられ、設定されるものとする。
【００２１】
管理制御盤５００に設けられたスイッチ５０１、・・・、５０５を利用者がＯＮ又はＯＦＦに設定することにより、それぞれ、５台の空調設備６０１、６０２、・・・、６０５の電源のＯＮ又はＯＦＦが制御される。また、温度センサ５１１及び５１２により検知された室内の温度が、それぞれ表示部６１１及び６１２により表示される。
【００２２】
１．１　ゲートウェイ装置１００

、１０３、読出部１０４、自アドレス算出部１０５、相手アドレス算出部１０６、記憶部１０７及び入出力部１０８から構成されている。
ゲートウェイ装置１００は、具体的には、マイクロプロセッサ、ＲＯＭ、ＲＡＭなどから構成されるコンピュータシステムである。前記ＲＡＭには、コンピュータプログラムが記憶されている。前記マイクロプロセッサが、前記コンピュータプログラムに従って動作することにより、ゲートウェイ装置１００は、その機能を達成する。

【００２３】
ゲートウェイ装置１００は、第１の通信プロトコルと第２の通信プロトコルとの間で、通信プロトコルの変換を行う。
なお、ゲートウェイ装置２００は、ゲートウェイ装置１００と同一の構成を有しているので、説明を省略する。
（１）ロータリスイッチ１０２、１０３及び読出部１０４
ロータリスイッチ１０２及び１０３は、それぞれ、４ビットのロータリスイッチであり、ロータリスイッチ１０２及び１０３には、ＩＰアドレスのホストアドレス部（８ビット）のうちの上位４ビットの値ＳＷ１及び下位４ビットの値ＳＷ２が利用者により設定される。

【００２４】
読出部１０４は、ロータリスイッチ１０２及び１０３によりそれぞれ設定された値ＳＷ１及び値ＳＷ２を読み出し、読み出した値ＳＷ１及び値ＳＷ２を自アドレス算出部１０５へ出力する。
（２）記憶部１０７
記憶部１０７は、自ＩＰアドレス及び相手ＩＰアドレスを記憶するための領域を備えている。

【００２５】
ここで、自ＩＰアドレスは、第１のネットワーク上におけるゲートウェイ装置１００の位置を示すアドレスであり、相手ＩＰアドレスは、ゲートウェイ装置１００に一対一に対応する装置、つまり、ゲートウェイ装置２００の第１のネットワーク上における位置を示すアドレスである。
（３）自アドレス算出部１０５
自アドレス算出部１０５は、読出部１０４から値ＳＷ１及び値ＳＷ２を受け取り、受け取った値ＳＷ１及び値ＳＷ２を用いて、次の式により、自ホストアドレスを算出する。ここで、自ホストアドレスは、自ＩＰアドレスのホストアドレス（８ビット）である。

【００２６】
自ホストアドレス＝値ＳＷ１×１６（１０進数）＋値ＳＷ２
次に、自アドレス算出部１０５は、自ホストアドレスに、固定値「１９２．１６８．２５１」を付加して、自ＩＰアドレスを生成する。
自ＩＰアドレス＝「１９２．１６８．２５１．（自ホストアドレス）」
次に、自アドレス算出部１０５は、生成した自ＩＰアドレスを記憶部１０７へ書き込む。

【００２７】
（４）相手アドレス算出部１０６
相手アドレス算出部１０６は、記憶部１０７から自ＩＰアドレスを読み出し、読み出した自ＩＰアドレス内の自ホストアドレスが、偶数であるか、奇数であるかを判断する。
（ａ）偶数であると判断する場合に、次式により、相手ホストアドレスを算出する。

【００２８】
相手ホストアドレス＝自ホストアドレス＋１
（ｂ）奇数であると判断する場合に、次式により、相手ホストアドレスを算出する。
相手ホストアドレス＝自ホストアドレス－１
次に、相手アドレス算出部１０６は、相手ホストアドレスに、固定値「１９２．１６８．

相手ＩＰアドレス＝「１９２．１６８．２５１．（相手ホストアドレス）」
次に、相手アドレス算出部１０６は、生成した相手ＩＰアドレスを記憶部１０７へ書き込む。
（５）入出力部１０８
入出力部１０８は、接続線４１上又は接続線５１上において、スタート信号及びエンド信号を検出する。また、スタート信号の検出後、エンド信号を検出するまでの期間において、パルス信号を検出する。ここで、スタート信号及びエンド信号は、それぞれ、データの送出期間の開始及び終了を示すための特別な並びのパルス信号である。
【００３０】
また、入出力部１０８は、１ビットのデータを格納するための変数を２５６個有している。ここでは、２５６個の変数をＤ（０）、Ｄ（１）、Ｄ（２）、・・・、Ｄ（２５５）により示す。
（第２の通信プロトコルから第１の通信プロトコルへの変換）
第２の通信プロトコルから第１の通信プロトコルへの変換について説明する。
【００３１】
入出力部１０８は、スタート信号の検出後、エンド信号を検出するまでの期間において、接続線４１上において検出したパルス信号に同期して、前記パルス信号の電圧Ｖｘ／２又は電圧「０」を検出する。ここで、電圧Ｖｘは、ゲートウェイ装置１００、センサーターミナルユニット３００、３０１及びパワーターミナルユニット４０２に供給される電圧である。電圧Ｖｘ／２を検出した場合には、相応する変数Ｄ（ｉ）を「１」（２進数表現）に設定し、電圧「０」を検出した場合には、相応する変数Ｄ（ｉ）を「０」（２進数表現）に設定する。
【００３２】
スタート信号の検出後、エンド信号を検出するまでの期間において、２５６個のパルス信号が含まれる。このため、２５６個の変数Ｄ（０）、Ｄ（１）、Ｄ（２）、・・・、Ｄ（２５５）が、それぞれ、「１」又は「０」に設定される。
次に、入出力部１０８は、エンド信号を検出すると、２５６個の変数Ｄ（０）、Ｄ（１）、Ｄ（２）、・・・、Ｄ（２５５）を通信部１０１へ出力する。
【００３３】
（第１の通信プロトコルから第２の通信プロトコルへの変換）
第１の通信プロトコルから第２の通信プロトコルへの変換について説明する。
入出力部１０８は、通信部１０１から送信データを受け取る。送信データは、２５６個の変数Ｄ（０）、Ｄ（１）、Ｄ（２）、・・・、Ｄ（２５５）を含む。
入出力部１０８は、スタート信号の検出後、エンド信号を検出するまでの期間において、検出したパルス信号に同期して、Ｄ（ｉ）が「０」であるか、「１」であるかを判断し、Ｄ（ｉ）＝「０」である場合には、電圧「０」を接続線５１へ出力し、Ｄ（ｉ）＝「１」である場合には、電圧Ｖｘ／２を接続線５１へ出力する。
【００３４】
（６）通信部１０１
（第２の通信プロトコルから第１の通信プロトコルへの変換）
第２の通信プロトコルから第１の通信プロトコルへの変換について、説明する。
通信部１０１は、入出力部１０８から２５６個の変数Ｄ（０）、Ｄ（１）、Ｄ（２）、・・・、Ｄ（２５５）を受け取り、記憶部１０７から自ＩＰアドレス及び相手ＩＰアドレスを読み出す。
【００３５】
次に、読み出した自ＩＰアドレスを送信元ＩＰアドレスとし、読み出した相手ＩＰアドレスを宛先ＩＰアドレスとし、受け取った２５６個の変数Ｄ（０）、Ｄ（１）、Ｄ（２）、・・・、Ｄ（２５５）を送信データとすることにより、図３に示すように、送信元ＩＰア[illegible]を含むヘッダ部７０１と、送信データを含む送信データ部７

介してＨＵＢ２２へ出力する。

【００３６】

（第１の通信プロトコルから第２の通信プロトコルへの変換）

第１の通信プロトコルから第２の通信プロトコルへの変換について、説明する。

通信部１０１は、ＨＵＢ２３から制御データを受け取り、受け取った制御データから送信データを抽出し、抽出した送信データを入出力部１０８へ出力する。

【００３７】

１．２　センサーターミナルユニット３００

センサーターミナルユニット３００は、特許文献２により開示されている制御部と同様の構成を有している。このため、詳細の説明を省略する。また、センサーターミナルユニット３０１及び３０２は、センサーターミナルユニット３００と同一の構成を有しているので説明を省略する。

【００３８】

センサーターミナルユニット３００は、計時部を内蔵している。計時部は、予め定められた時間間隔で繰り返しクロック信号を生成する。

また、センサーターミナルユニット３００は、以下に示す制御信号を時系列に繰り返し生成し、生成した制御信号を接続線４１へ出力する。

図４に示すように、制御信号８０１は、スタート信号８０２、２５６個のパルス信号８１１、８１２、・・・、８１６、及びエンド信号８０９から構成されている。スタート信号８０２及びエンド信号８０９は、それぞれの信号を識別できように、特別な並びのパルス信号を含む。２５６個のパルス信号８１１、８１２、・・・、８１６は、クロック信号に同期して生成され、「０」Ｖの値を有し、２５６個のパルス信号８１１、８１２、・・・、８１６のうち、先頭の７個のパルス信号は、それぞれ、５個のスイッチ５０１、５０２、・・・、５０５、及び２個の表示部６１１、６１２に対応している。先頭の７個を除くその他のパルス信号は、ビル空調管理システム１０では、未使用である。クロック信号と次のクロック信号の間隔の期間は、電源電圧Ｖｘの値を取る。

【００３９】

ここで生成される２５６個のパルス信号８１１、８１２、・・・、８１６は、図４に示すように、それぞれ、上述した２５６個の変数Ｄ（０）、Ｄ（１）、Ｄ（２）、・・・、Ｄ（２５５）に対応している。

この図に示すように、Ｖｘ／２の値を取るパルス信号８１１に対して、変数Ｄ（０）＝「１」であり、「０」Ｖの値を取るパルス信号８１２に対して、変数Ｄ（１）＝「０」である。

【００４０】

１．３　管理制御盤５００

管理制御盤５００は、上述したように、５個のスイッチ５０１、５０２、・・・、５０５及び２個の表示部６１１、６１２を内蔵しており、スイッチ５０１、５０２及び５０３は、センサーターミナルユニット３００と接続されており、

スイッチ５０４及び５０３は、センサーターミナルユニット３０１と接続されており、表示部６１１及び６１２は、パワーターミナルユニット４０２と接続されている。

【００４１】

スイッチ５０１は、利用者による操作で、ＯＮ又はＯＦＦのいずれかの状態を取る切替部を有している。切替部がＯＮの状態を取る場合に、スイッチ５０１とセンサーターミナルユニット３００とを接続する回線が閉じられ、切替部がＯＦＦの状態を取る場合に、スイッチ５０１とセンサーターミナルユニット３００とを接続する回線が開かれる。また、スイッチ５０２、・・・、５０５についても、スイッチ５０１と同様の構成を有しているので、説明を省略する。

【００４２】

表示部６１１は、ＬＥＤ（Ｌｉｇｈｔ－ｅｍｉｔｔｉｎｇ　ｄｉｏｄｅ）を内蔵し、セン

Ｄは、発光し、電圧を供給されない場合には、ＬＥＤは、発光しない。また、表示部６１２についても、表示部６１１と同様であるので、説明を省略する。

【００４３】

１．４　パワーターミナルユニット４００

パワーターミナルユニット４００は、特許文献１により開示されている制御部と同様の構成を有している。このため、詳細の説明を省略する。

パワーターミナルユニット４００は、計時部を内蔵している。計時部は、予め定められた時間間隔で繰り返し、クロック信号を生成する。

【００４４】

また、パワーターミナルユニット４００は、センサーターミナルユニット３００と同様に、図４に示す制御信号を時系列に繰り返し生成し、生成した制御信号を接続線５１へ出力する。

パワーターミナルユニット４００により生成される制御信号に含まれる２５６個のパルス信号のうち、先頭の７個のパルス信号は、それぞれ、５個の空調設備６０１、６０２、・・・、６０５及び２個り温度センサ５１１、５１２に対応している。

【００４５】

１．５　空調設備６０１及び温度センサ５１１

空調設備６０１は、気温、湿度及び換気の管理を行う空調機構と、空調機構のＯＮ／ＯＦＦを制御する制御部とから構成されている。制御部は、パワーターミナルユニット４００から空調機構のＯＮを示す電圧（例えば、５Ｖ）を供給された場合に、空調機構をＯＮとするように制御する。一方、空調機構のＯＦＦを示す電圧（例えば、０Ｖ）を供給された場合に、空調機構をＯＦＦとするように制御する。また、空調設備６０２、・・・、６０５についても、空調設備６０１と同じ構成を有しているので、説明を省略する。

【００４６】

温度センサ５１１は、サーミスタ（ｔｈｅｒｍａｌｌｙ　ｓｅｎｓｉｔｉｖｅ　ｒｅｓｉｓｔｏｒ）を内蔵する温度検出回路であり、周囲温度が設定値を超えたときに、５Ｖの電圧をセンサーターミナルユニット３０２へ供給し、周囲温度が設定値以下のときに、０Ｖの電圧をセンサーターミナルユニット３０２へ供給する。また、温度センサ５１２についても、温度センサ５１１と同じ構成を有しているので、説明を省略する。

【００４７】

１．６　ビル空調管理システム１０の動作

ビル空調管理システム１０の動作について説明する。

（１）ビル空調管理システム１０全体の動作

ビル空調管理システム１０全体の動作について、図５に示すフローチャートを用いて説明する。

【００４８】

ゲートウェイ装置１００は、自己及び相手のＩＰアドレスを設定し（ステップＳ１０１）、ゲートウェイ装置２００は、自己及び相手のＩＰアドレスを設定し（ステップＳ１０２）。

スイッチ５０１は、利用者によりＯＮ又はＯＦＦの状態に切り替えられる（ステップＳ１００）。

【００４９】

センサーターミナルユニット３００は、制御信号を生成し、スイッチ５０１のＯＮ／ＯＦＦを検知し、スイッチ５０１のＯＮ／ＯＦＦに応じて、制御信号の対応するパルス信号に、「０」Ｖ又はＶｘ／２を載せて出力し、制御信号は、接続線４１上を流れる（ステップＳ１０３～ステップＳ１０４）。

ゲートウェイ装置１００は、接続線４１上の制御信号から制御データを生成し（ステップＳ１０５）、生成した制御データを第１のネットワークを介して、ゲートウェイ装置２０

ゲートウェイ装置２００は、受信した制御データからパルス信号を生成し、生成したパルス信号を制御信号に載せて出力する（ステップＳ１０７）。制御信号が接続線５１上を流れる（ステップＳ１０８～ステップＳ１０９）。
空調設備６０１の空調機構は、ＯＮ又はＯＦＦに制御される（ステップＳ１１０）。

【００５１】
なお、温度センサ５１１により検知された温度により、表示部６１１が内蔵するＬＥＤを点滅する場合の動作についても、上記と同様であるので、説明を省略する。

（２）ゲートウェイ装置１００によるＩＰアドレスの設定
ゲートウェイ装置１００によるＩＰアドレスの設定の動作について、図６に示すフローチャートを用いて説明する。なお、ゲートウェイ装置２００によるＩＰアドレスの設定の動作については、同様であるので、説明を省略する。

【００５２】
読出部１０４は、ロータリスイッチ１０２及び１０３によりそれぞれ設定された値ＳＷ１及び値ＳＷ２を読み出し、読み出した値ＳＷ１及び値ＳＷ２を自アドレス算出部１０５へ出力する（ステップＳ１３１）。
自アドレス算出部１０５は、読出部１０４から値ＳＷ１及び値ＳＷ２を受け取り、受け取った値ＳＷ１及び値ＳＷ２を用いて、自ホストアドレス＝値ＳＷ１×１６（１０進数）＋値ＳＷ２により、自ホストアドレスを算出する（ステップＳ１３２）。

【００５３】
次に、自アドレス算出部１０５は、自ホストアドレスに、固定値「１９２．１６８．２５１」を付加して、自ＩＰアドレス＝「１９２．１６８．２５１．（自ホストアドレス）」を生成する（ステップＳ１３３）。
次に、自アドレス算出部１０５は、生成した自ＩＰアドレスを記憶部１０７へ書き込む（ステップＳ１３４）。

【００５４】
次に、相手アドレス算出部１０６は、記憶部１０７から自ＩＰアドレスを読み出し、読み出した自ＩＰアドレス内の自ホストアドレスが、偶数であるか、奇数であるかを判断する（ステップＳ１３５）。偶数であると判断する場合に（ステップＳ１３５）、相手ホストアドレス＝自ホストアドレス＋１により、相手ホストアドレスを算出する（ステップＳ１３６）。奇数であると判断する場合に（ステップＳ１３５）、相手ホストアドレス＝自ホストアドレス－１により、相手ホストアドレスを算出する（ステップＳ１３７）。

【００５５】
次に、相手アドレス算出部１０６は、相手ホストアドレスに、固定値「１９２．１６８．２５１」を付加して、相手ＩＰアドレス＝「１９２．１６８．２５１．（相手ホストアドレス）」を生成する（ステップＳ１３８）。
次に、相手アドレス算出部１０６は、生成した相手ＩＰアドレスを記憶部１０７へ書き込む（ステップＳ１３９）。

【００５６】
（３）制御データの生成の動作
ゲートウェイ装置１００による制御データの生成の動作について、図７に示すフローチャートを用いて説明する。
入出力部１０８は、スタート信号を検出すると（ステップＳ１５１）、カウンタｉに０の値を設定する（ステップＳ１５２）。

【００５７】
次に、入出力部１０８は、接続線４１上において検出したパルス信号に同期して、前記パルス信号の電圧Ｖｘ／２又は電圧「０」Ｖを検出する（ステップＳ１５３）。電圧Ｖｘ／２を検出した場合には（ステップＳ１５４）、相応する変数Ｄ（ｉ）を「１」（２進数表現）に設定し（ステップＳ１５６）、電圧「０」を検出した場合には（ステップＳ１５４）、相応する変数Ｄ（ｉ）を「０」（２進数表現）に設定する（ステップＳ１５５）。

次に、カウンタｉに「１」の値を加算し（ステップＳ１５７）、エンド信号を検出するまで（ステップＳ１５８）、ステップＳ１５３～ステップＳ１５７を繰り返す。
エンド信号を検出すると（ステップＳ１５８）、通信部１０１は、入出力部１０８から２５６個の変数Ｄ（０）、Ｄ（１）、Ｄ（２）、・・・、Ｄ（２５５）を受け取り、記憶部１０７から自ＩＰアドレス及び相手ＩＰアドレスを読み出し、読み出した自ＩＰアドレスを送信元ＩＰアドレスとし（ステップＳ１５９）、読み出した相手ＩＰアドレスを宛先ＩＰアドレスとし（ステップＳ１６０）、受け取った２５６個の変数Ｄ（０）、Ｄ（１）、Ｄ（２）、・・・、Ｄ（２５５）を送信データとし（ステップＳ１６１）、生成した制御データを、接続線３３を介してＨＵＢ２２を介してゲートウェイ装置２００へ出力する（ステップＳ１６２）。

【００５９】
次に、ステップＳ１５１へ戻って処理を繰り返す。

（４）パルス信号の生成の動作
ゲートウェイ装置２００によるパルス信号の生成の動作について、図８に示すフローチャートを用いて説明する。
通信部１０１は、ゲートウェイ装置１００からＨＵＢ２３を介して制御データを受け取り、２５６個の変数Ｄ（０）、Ｄ（１）、Ｄ（２）、・・・、Ｄ（２５５）を含む送信データを抽出する。

【００６０】
入出力部１０８は、スタート信号を検出すると（ステップＳ１８１）、カウンタｉに０の値を設定する（ステップＳ１８２）。
次に、入出力部１０８は、検出したパルス信号に同期して、Ｄ（ｉ）が「０」であるか、「１」であるかを判断し（ステップＳ１８３）、Ｄ（ｉ）＝「０」である場合には（ステップＳ１８３）、電圧「０」を接続線５１へ出力し（ステップＳ１８５）、Ｄ（ｉ）＝「１」である場合には（ステップＳ１８３）、電圧Ｖｘ／２を接続線５１へ出力する（ステップＳ１８４）。

【００６１】
次に、カウンタｉに「１」の値を加算し（ステップＳ１８６）、エンド信号を検出するまで（ステップＳ１８７）、ステップＳ１８３～ステップＳ１８６を繰り返す。
エンド信号を検出すると（ステップＳ１８７）、次に、ステップＳ１８１へ戻って処理を繰り返す。

【００６２】
２．まとめ
以上説明したように、上記の実施の形態では、対応する２個のゲートウェイ装置のＩＰアドレスは、隣接する２個の値であるとし、一方は、偶数値を取り、他方は、奇数値を取る。２個のゲートウェイ装置のＩＰアドレスは、一例として、それぞれ、「１９２．１６８．２５１．２」及び「１９２．１６８．２５１．３」である。ここで、「１９２．１６８．２５１．２」及び「１９２．１６８．２５１．３」は、末尾のみが異なる値を有している。

【００６３】
各ゲートウェイ装置が、相手のＩＰアドレスを算出する際に、自己のＩＰアドレスが偶数値を取る場合には、自己のＩＰアドレスに「１」を加算した値を相手のＩＰアドレスとし、自己のＩＰアドレスが奇数値を取る場合には、自己のＩＰアドレスから「１」を減じた値を相手のＩＰアドレスとする。
こうして、対応付けされた複数のゲートウェイ装置のネットワーク上のアドレスを容易に設定することができる。

【００６４】
また、上記の実施の形態において、第２のネットワークに含まれるゲートウェイ装置１００から第３のネットワークに含まれるゲートウェイ装置２００へ制御データを一方向に送信するだけでなく、ゲートウェイ装置１００とゲートウェイ装置２００との間で相互に制

この場合に、第１ゲートウェイ装置は、第２及び第３ゲートウェイ装置に対して、情報を送信する。また、第２ゲートウェイ装置は、第１及び第３ゲートウェイ装置に対して、情報を送信する。また、第３ゲートウェイ装置は、第１及び第２ゲートウェイ装置に対して、情報を送信する。

【００７２】

このとき、各ゲートウェイ装置は、次に示すようにして、対応するゲートウェイ装置の相手ＩＰアドレスを算出する。

（ａ）ゲートウェイ装置の自己のＩＰアドレスを「３」で割ったときの余りが「０」なら、（「自己のＩＰアドレス（ｍｏｄ　３）＝　０」と表現）

第１の相手のＩＰアドレス＝自己のＩＰアドレス＋１

第２の相手のＩＰアドレス＝自己のＩＰアドレス＋２

（ｂ）ゲートウェイ装置の自己のＩＰアドレスを「３」で割ったときの余りが「１」なら、（「自己のＩＰアドレス（ｍｏｄ　３）＝　１」と表現）

」第１の相手のＩＰアドレス＝自己のＩＰアドレス－１

第２の相手のＩＰアドレス＝自己のＩＰアドレス＋１

（ｃ）ゲートウェイ装置の自己のＩＰアドレスを「３」で割ったときの余りが「２」なら、（「自己のＩＰアドレス（ｍｏｄ　３）＝　２」と表現）

第１の相手のＩＰアドレス＝自己のＩＰアドレス－１

第２の相手のＩＰアドレス＝自己のＩＰアドレス－２

（５－２）１台のゲートウェイ装置（主ゲートウェイ装置）が、２台のゲートウェイ装置（第１副ゲートウェイ装置及び第２副ゲートウェイ装置）に対応しているとしてもよい。

【００７３】

この場合に、主ゲートウェイ装置は、第１副ゲートウェイ装置及び第２副ゲートウェイ装置に対して、情報を送信する。また、第１副ゲートウェイ装置は、主ゲートウェイ装置に対して、情報を送信する。また、第２副ゲートウェイ装置は、主ゲートウェイ装置に対して、情報を送信する。

このとき、主ゲートウェイ装置には、自己のＩＰアドレスを「３」で割ったときの余りが「０」となるように、前記自己のＩＰアドレスを設定する。また、第１副ゲートウェイ装置には、自己のＩＰアドレスを「３」で割ったときの余りが「１」となるように、前記自己のＩＰアドレスを設定する。また、第２副ゲートウェイ装置には、自己のＩＰアドレスを「３」で割ったときの余りが「２」となるように、前記自己のＩＰアドレスを設定する。

【００７４】

このとき、主ゲートウェイ装置は、次に示すようにして、対応するゲートウェイ装置の相手ＩＰアドレスを算出する。

第１副ゲートウェイ装置のＩＰアドレス＝自己のＩＰアドレス＋１

第２副ゲートウェイ装置のＩＰアドレス＝自己のＩＰアドレス＋２

また、このとき、第１副ゲートウェイ装置は、次に示すようにして、対応する主ゲートウェイ装置の相手ＩＰアドレスを算出する。

【００７５】

主ゲートウェイ装置のＩＰアドレス＝自己のＩＰアドレス－１

また、このとき、第２副ゲートウェイ装置は、次に示すようにして、対応する主ゲートウェイ装置の相手ＩＰアドレスを算出する。

主ゲートウェイ装置のＩＰアドレス＝自己のＩＰアドレス－２

（６）本発明は、上記に示す方法であるとしてもよい。また、これらの方法をコンピュータにより実現するコンピュータプログラムであるとしてもよいし、前記コンピュータプログラムからなるデジタル信号であるとしてもよい。

【００７６】

また、本発明は、前記コンピュータプログラム又は前記デジタル信号をコンピュータ読み

ＭＯ、ＤＶＤ、ＤＶＤ－ＲＯＭ、ＤＶＤ－ＲＡＭ、ＢＤ（Ｂｌｕ－ｒａｙ Ｄｉｓｃ）、半導体メモリなど、に記録したものとしてもよい。また、これらの記録媒体に記録されている前記コンピュータプログラム又は前記デジタル信号であるとしてもよい。

【００７７】

また、本発明は、前記コンピュータプログラム又は前記デジタル信号を、電気通信回線、無線又は有線通信回線、インターネットを代表とするネットワーク、データ放送等を経由して伝送するものとしてもよい。

また、本発明は、マイクロプロセッサとメモリとを備えたコンピュータシステムであって、前記メモリは、上記コンピュータプログラムを記憶しており、前記マイクロプロセッサは、前記コンピュータプログラムに従って動作するとしてもよい。

【００７８】

また、前記プログラム又は前記デジタル信号を前記記録媒体に記録して移送することにより、又は前記プログラム又は前記デジタル信号を前記ネットワーク等を経由して移送することにより、独立した他のコンピュータシステムにより実施するとしてもよい。

（７）上記実施の形態及び上記変形例をそれぞれ組み合わせるとしてもよい。

【００７９】

【発明の効果】

以上説明したように、本発明は、対応する第１及び第２アドレスによりネットワーク上の位置がそれぞれ示される第１及び第２伝送装置の間で、ネットワークを介して、通信を行う伝送システムであって、前記第１伝送装置は、第１アドレスを記憶している記憶手段と、前記第１アドレスに基づいて、対応する第２アドレスを取得する取得手段と、送信先アドレスとして第２アドレスが付加された伝送データをネットワークを介して送出する送出手段とを備え、前記第２伝送装置は、第２アドレスを記憶している記憶手段と、前記第２アドレスに基づいて、対応する第１アドレスを取得する取得手段と、送信先アドレスとして第１アドレスが付加された伝送データをネットワークを介して送出する送出手段とを備える。

【００８０】

この構成によると、第１伝送装置は、第１アドレスに基づいて、対応する第２アドレスを取得し、また、第２伝送装置は、第２アドレスに基づいて、対応する第１アドレスを取得するので、対応付けされた複数の装置のネットワーク上のアドレスを容易に設定することができる。

また、本発明は、対応する第１及び第２アドレスによりネットワーク上の位置がそれぞれ示される伝送装置及び受信装置の間で、ネットワークを介して、通信を行う伝送システムにおける前記伝送装置であって、第１アドレスを記憶している記憶手段と、前記第１アドレスに基づいて、対応する第２アドレスを取得する取得手段と、送信先アドレスとして第２アドレスが付加された伝送データをネットワークを介して送出する送出手段とを備える。

【００８１】

この構成によると、伝送装置は、第１アドレスに基づいて、対応する第２アドレスを取得するので、対応付けされた装置のネットワーク上のアドレスを容易に設定することができる。

ここで、対応する第１及び第２アドレスは、隣接する値を有し、前記取得手段は、前記第１アドレスが偶数であるか又は奇数であるかを判断し、偶数であると判断する場合に、前記第１アドレスから１を減じた値を第２アドレスとして取得し、奇数であると判断する場合に、前記第１アドレスに１を加えた値を第２アドレスとして取得する。

【００８２】

この構成によると、第１及び第２アドレスが隣接する値である場合に、容易に対応するアドレスを取得することができる。

【図面の簡単な説明】

【図２】ゲートウェイ装置１００の構成を示す機能ブロック図である。
【図３】制御データの構造を示すデータ構造図である。
【図４】制御信号のデータ構造と、制御信号と制御データとの対応を示す。
【図５】ビル空調管理システム１０全体の動作を示すフローチャートである。
【図６】ゲートウェイ装置１００によるＩＰアドレスの設定の動作を示すフローチャートである。
【図７】ゲートウェイ装置１００による制御データの生成の動作を示すフローチャートである。
【図８】ゲートウェイ装置２００によるパルス信号の生成の動作を示すフローチャートである。

【符号の説明】

１０	ビル空調管理システム
２１～２３	ＨＵＢユニット
１００	ゲートウェイ装置
２００	ゲートウェイ装置
３００	センサーターミナルユニット
４００	パワーターミナルユニット
５００	スイッチボード
５０１～５０４	スイッチ
６０１～６０４	空調設備

【図１】

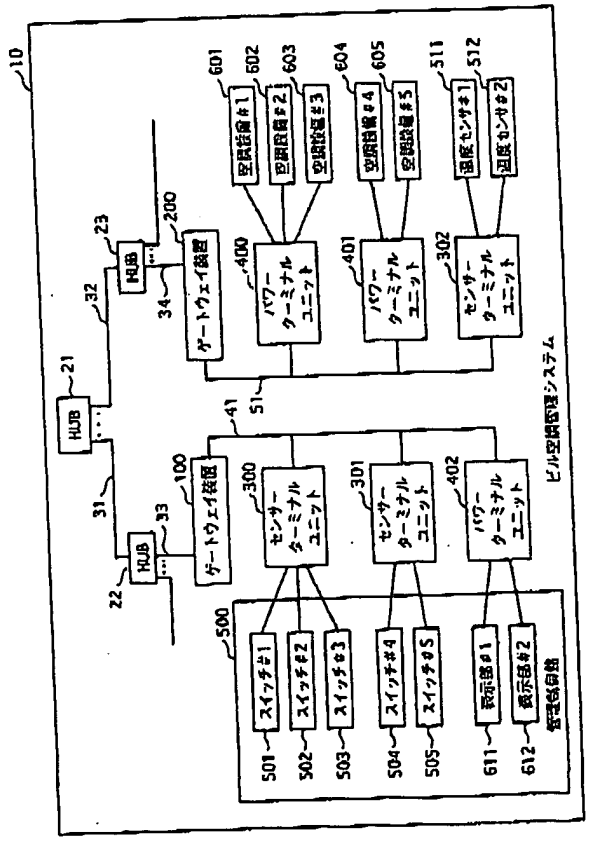

【図２】

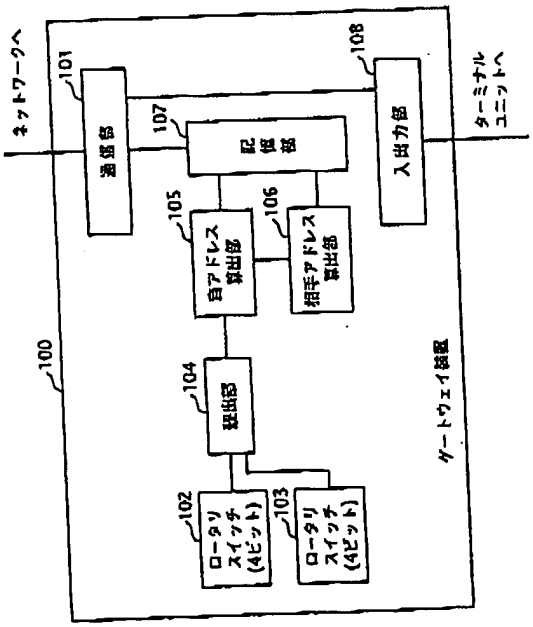

【図３】

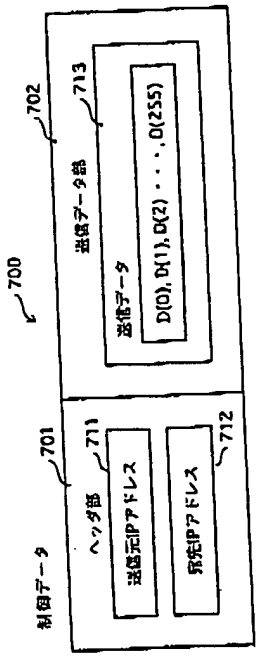
700
701
702
711
712
713
制御データ
ヘッダ部
送信元IPアドレス
宛先IPアドレス
送信データ部
送信データ
D(0), D(1), D(2) ・・・, D(255)

【図４】

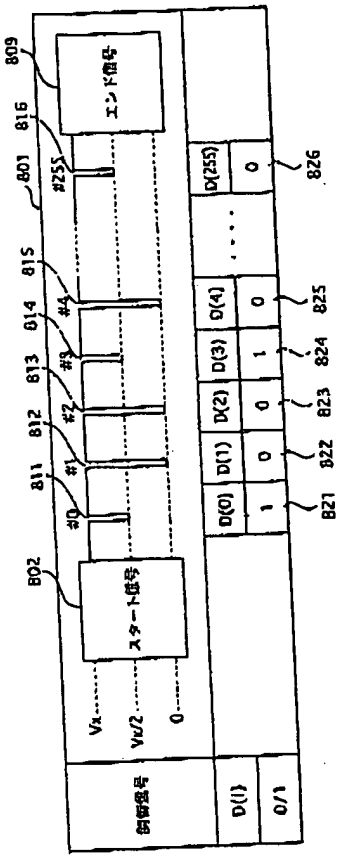
801
802
809
811
812
813
814
815
816
#0
#1
#2
#3
#4
#255
スタート信号
エンド信号
D(0)
D(1)
D(2)
D(3)
D(4)
D(255)
1
0
0
1
0
0
821
822
823
824
825
826
Vx
Vx/2
0
制御信号
D(1)
0/1

【図５】

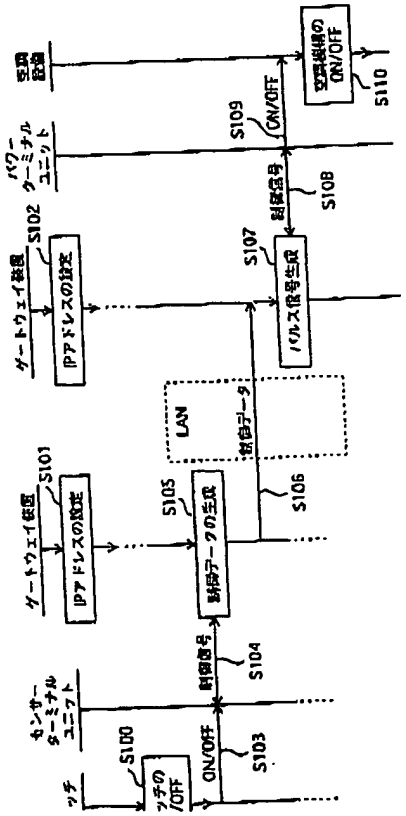
S100
S101
S102
S103
S104
S105
S106
S107
S108
S109
S110
ON/OFF
制御信号
LAN
制御データ
ゲートウェイ装置
IPアドレスの設定
制御データの生成
パルス信号生成
パワーターミナルユニット
センサーターミナルユニット
ツチ
ツチの/OFF

【図６】

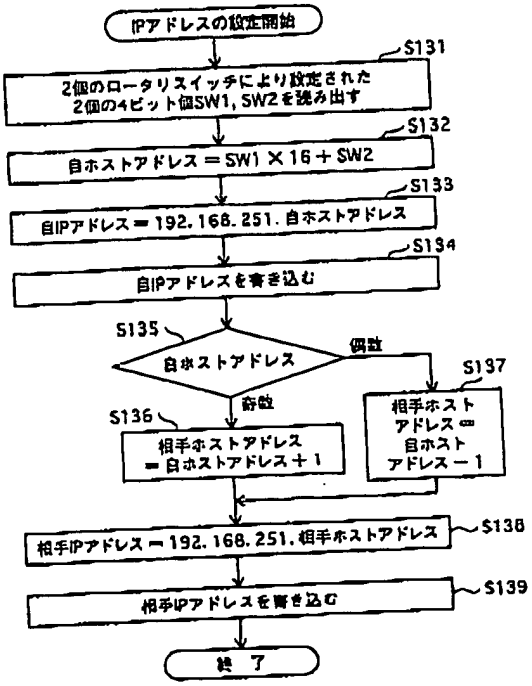
IPアドレスの設定開始
S131
2個のロータリスイッチにより設定された
2個の4ビット値SW1, SW2を読み出す
S132
自ホストアドレス＝SW1×16＋SW2
S133
自IPアドレス＝192.168.251.自ホストアドレス
S134
自IPアドレスを書き込む
S135
自ホストアドレス
偶数
奇数
S136
相手ホストアドレス
＝自ホストアドレス＋1
S137
相手ホスト
アドレス＝
自ホスト
アドレス－1
S138
相手IPアドレス＝192.168.251.相手ホストアドレス
S139
相手IPアドレスを書き込む
終了

【図７】

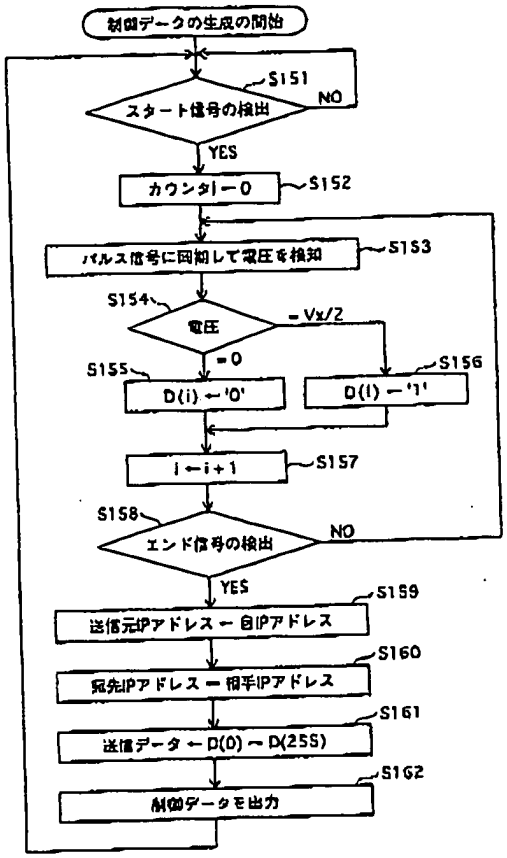
制御データの生成の開始
S151
スタート信号の検出
NO
YES
カウンタi←0
S152
パルス信号に同期して電圧を検知
S153
S154
電圧
=Vx/2
=0
S155
D(i)←'0'
S156
D(i)←'1'
i←i+1
S157
S158
エンド信号の検出
NO
YES
S159
送信元IPアドレス←自IPアドレス
S160
宛先IPアドレス←相手IPアドレス
S161
送信データ←D(0)～D(255)
S162
制御データを出力

【図８】

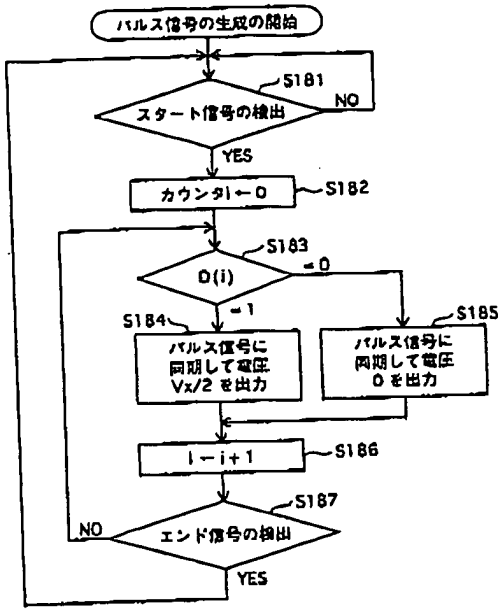
パルス信号の生成の開始
S181
スタート信号の検出
NO
YES
カウンタi←0
S182
S183
D(i)
=0
=1
S184
パルス信号に同期して電圧Vx/2を出力
S185
パルス信号に同期して電圧0を出力
i←i+1
S186
S187
エンド信号の検出
NO
YES

フロントページの続き

(72)発明者 金田 英男
京都府長岡京市馬場図所２７ ＮＫＥ株式会社内

Ｆターム(参考) 5K033 AA09 CC01 DA01 DB12 EA03 EC03

PATENT ABSTRACTS OF JAPAN

(11)Publication number : 2006-050222
(43)Date of publication of application : 16.02.2006

(51)Int.Cl. H04L 12/28 (2006.01)
H04L 12/44 (2006.01)

(21)Application number : 2004-228028
(22)Date of filing : 04.08.2004

(71)Applicant : CANON INC
(72)Inventor : MORIKAWA KENICHI

(54) METHOD FOR AVOIDING ENDLESS LOOP OF PACKET

(57)Abstract:
PROBLEM TO BE SOLVED: To provide a technology capable of building up a network for avoiding the occurrence of a loop by properly blocking a packet so that a loop packet is not endlessly circulated when a loop is detected on the network.
SOLUTION: When a network apparatus such as a switching HUB or a bridge detects a loop connection on the network, each network apparatus generates a random number from a point of time when each network apparatus detects the loop, detects the loop once again after a wait by a time calculated on the basis of the random number, and blocks the packet of either of looped ports when the loop is again detected. After the interruption of the packet, since other network apparatus blocks the packet simultaneously, the packet going to be looped is monitored in order to confirm whether or not the network is separated, and if the separation of the network is decided, the packet blocking is stopped.

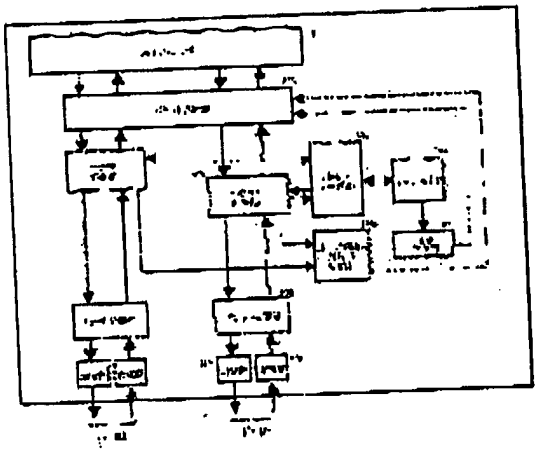

(19)日本国特許庁(JP)

(12)公開特許公報(A)

(11)特許出願公開番号
特開2006-50222
(P2006-50222A)

(43)公開日 平成18年2月16日(2006.2.16)

(51)Int.Cl.			F I			テーマコード(参考)
H04L	12/28	(2006.01)	H04L	12/28	200M	5K033
H04L	12/44	(2006.01)	H04L	12/44	300	

審査請求 未請求 請求項の数 4 OL (全 10 頁)

(21)出願番号 特願2004-228028 (P2004-228028)
(22)出願日 平成16年8月4日 (2004.8.4)

(71)出願人 000001007
キヤノン株式会社
東京都大田区下丸子3丁目30番2号
(74)代理人 100090538
弁理士 西山 恵三
(74)代理人 100096965
弁理士 内尾 裕一
(72)発明者 鞍川 健一
東京都大田区下丸子3丁目30番2号キヤノン株式会社内

Fターム(参考) 5K033 AA05 BA08 CC01 DB18 DB20 EA02 EA07

(54)【発明の名称】パケットの無限ループ回避方法

(57)【要約】
【課題】 ネットワーク上でループが検出された場合，ループパケットが無限に周回しないように適正にパケットを遮断することによりループを回避したネットワークを構築できる。
【解決手段】 スイッチングHUBやブリッジ等のネットワーク装置において，ネットワーク上にループ接続を検出した場合，各ネットワーク装置がループを検出した時点から乱数を発生させ、その乱数を元に算出された時間だけ待ってもう一度検出を行い、再びループが検出されたらループしているポートのどちらか一方についてパケットを遮断する。パケット遮断後は、他のネットワーク装置で同時にパケット遮断が行われることにより、ネットワークが分離されてしまっていないかを確認するためにループするであろうパケットを監視し、ネットワークが分離されていると判定されればパケット遮断を中止する。
【選択図】 図2

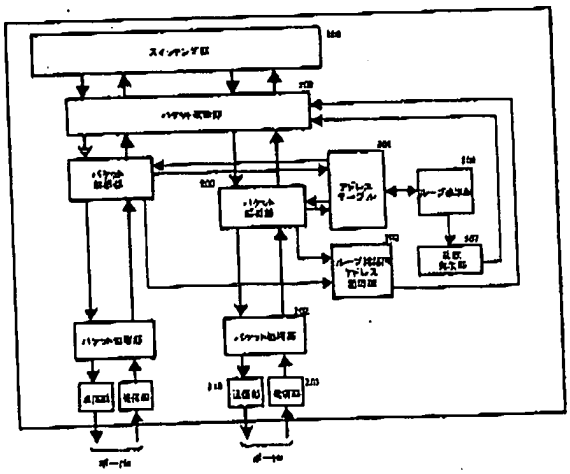

【特許請求の範囲】
【請求項１】
スイッチングHUBやブリッジ等のネットワーク装置におけるパケットの無限ループ回避方法において、
ネットワーク上にループ接続を検出した場合、各ネットワーク装置がループを検出した時点から乱数を発生させ、その乱数を元に算出された時間だけ待ってから、もう一度ループ検出を行い、再びループが検出されたら、ループしているポートのどちらか一方についてパケットを遮断する手段を備えたことを特徴とするパケットの無限ループ回避方法。
【請求項２】
スイッチングHUBやブリッジ等のネットワーク装置におけるパケットの無限ループ回避方法において、
前記パケット遮断動作を実行したネットワーク装置は、ループ接続されていると判定されて遮断を行わなかった方のポートからループパケットになり得るパケットあるいはループ検出用パケットを送信する際に、当該パケットを記憶しておき、当該パケットがネットワークを通してパケット遮断を行っている方のポートにて検出できるかを確認する手段を備えたことを特徴とするパケットの無限ループ回避方法。
【請求項３】
スイッチングHUBやブリッジ等のネットワーク装置におけるパケットの無限ループ回避方法において、
前記確認手段にて当該パケットが確認できなかった場合、パケット遮断動作を中止する手段を備えたことを特徴とするパケットの無限ループ回避方法。
【請求項４】
スイッチングHUBやブリッジ等のネットワーク装置におけるパケットの無限ループ回避方法において、
複数のネットワーク装置が同時にパケット遮断動作を行いネットワークを分離してしまうことやネットワーク構成が変更された場合に、前記手段を繰り返すことにより、ループ接続及びネットワークの分離のないネットワークを構築できることを特徴とするパケットの無限ループ回避方法。

【発明の詳細な説明】
【技術分野】
【０００１】
本発明はパケットの無限ループ回避方法に関する。
【背景技術】
【０００２】
従来、スイッチングHUBやブリッジは各ポート間を直接交換接続して、他のポートへトラフィックの影響を与えない。どのポートとどのポート接続するかは、学習してあるアドレスで判定する。各ポートに接続されたアドレスのテーブルを作成し、そのテーブルに従いポート間をスイッチング技術によって接続する。アドレステーブルに登録されていない送信元アドレスを持ったパケットを受信した場合は、受信したポート以外の全てのポートにパケットを送信する。また、複数のアドレスのテーブルをポートごとに作成することができるので、ポート先には端末やHUBを接続することができる。
【特許文献１】特開平９－９３２８２号公報
【特許文献２】特開平８－３２６１０号公報
【発明の開示】
【発明が解決しようとする課題】
【０００３】
しかし、スイッチングHUBやブリッジのパケット転送には問題がある。それは図1のように装置間でループ形状を伴う接続をしてしまった場合である。このような接続においてあ

いトラフィックが送信されるごとに増えつづけてトラフィックレートが上昇し、最終的にはネットワークが飽和状態に陥ってしまう。また、ネットワーク全体で解決することができない宛先アドレスのパケットが送信された場合も同様である。これに対してIEEE 802.1Dブリッジング標準では、転送ループの回避策としてスパニングツリーアルゴリズムが規定されている。

【０００４】

スパニングツリーアルゴリズムでは、スパニングツリー用のマルチキャストアドレスを使用して、各スイッチが送信するコンフィグレーションメッセージをもとに動作し、ループ接続時に単一のルートを選択してパケットを送信することができる。しかしながら、通常スパニングツリーのようなループ検出プロトコルは、動作制御が非常に複雑なプロトコルであり、実装する場合には、ＣＰＵやメモリ等の専有時間が増えて、資源を消費するという問題点があった。また、この方法では、ループ検出用の制御パケットを装置間で定期的に交換するため、通常のユーザデータを送るための実質的な回線が減少するという問題点があった。更にスパニングツリープロトコルが実装されているスイッチングHUBはそうでないものと比較するとコストが上がってしまうという問題点もある。

【０００５】

スパニングツリープロトコルを使用せずにループを検出し、ループパケットを遮断する方法として、特許文献１では、あるポートから受信したパケットの送信元アドレスと以前に他のポートから受信したパケットの送信元アドレスとを比較し、この比較結果がある一定時間内に設定回数だけ一致した場合、そのパケットをループパケットとして遮断する。しかしながらこの方法では、ネットワークがループ接続されている以上、必ずループパケットが発生し、その度にループを検出し、ループパケットを廃棄するという処理を行うことになり、効率が非常に悪い。

【０００６】

更に、特許文献２では、あるポートから同じ中継装置の他のポートを宛先とするループ判定用のパケットを送出し、そのループ判定用パケットが当該宛先ポートに到着した場合にループ接続が存在すると判定し、任意の時間後、もう一度、同様のループ判定を行い、2度目もループがあるものと判定された時当該宛先ポートを中継禁止とする。ループの判定を2度行う理由としては、両方の中継装置が同時に働いてループを形成する中継経路が2つとも切れてしまい、2つのネットワークに分離されてしまうことを回避するためであり、ループの判定後に任意の時間待ちを行った後、もう一度、同様のループ判定を行うことで、1度目のループ判定が両方の中継装置で同時であっても、中継装置がそれぞれ任意の時間待ちを行ったことで、2度目のループ判定は同時ではなくなり、どちらかが先に行うことになるからである。しかしながら、1度目のループ判定が同時ではなく、お互いの中継装置が任意の時間待ちを行ってしまったことにより、2度目のループ判定が同時になってしまい、2つのネットワークに分離されてしまう場合については考えられていない。また、中継禁止動作が正常に行われたとしても、後にネットワークの構成が変わり、中継を禁止しているポートを復帰させなければならない状況に対応することができないという問題点がある。

【課題を解決するための手段】

【０００７】

上記目的を達成するため、本出願に係る発明はスイッチングHUBやブリッジ等のネットワーク装置において、スパニングツリーを実装することなくネットワーク上のループ接続を検出した後に、それぞれのネットワーク装置が自律的にループ接続されているポートについてパケットを遮断することにより、適正なネットワークを構築することを特徴とする。

【０００８】

上記構成において、ネットワーク上のループ接続を検出した後にそれぞれのネットワーク装置が自律的に、ループ接続されているポートについてパケットを遮断する手段は、ネ

から乱数を発生させ、その乱数を元に算出された時間だけ待ってから、もう一度ループ検出を行い、再びループが検出されたら、ループしているポートのどちらか一方についてパケットを遮断する手段と、前記パケット遮断動作を実行したネットワーク装置は、ループ接続されていると判定されて遮断を行わなかった方のポートからループパケットになり得るパケットあるいはループ検出用パケットを送信する際に、当該パケットを記憶しておき、当該パケットがネットワークを通してパケット遮断を行っている方のポートにて検出できるかを確認する手段と、前記確認手段にて当該パケットが確認できなかった場合、パケット遮断動作を中止する手段とを持ち、複数のネットワーク装置が同時に前記パケット遮断動作を行いネットワークを分離してしまうことや、ネットワーク構成が変更された場合に、前記手段を繰り返すことにより、ループ接続がなくネットワークの分離も発生していないネットワークを構築できることを特徴とする。

【発明の効果】

【０００９】

以上説明したように、本出願に係る発明によれば、スイッチングHUBやブリッジなどのネットワーク装置のパケット転送において、ネットワーク装置間でループ形状を伴う接続を行い、端末からブロードキャストパケットなどの複数端末宛てパケットが送信された場合、上記パケットがネットワーク上を無限に周回し最終的にはネットワークが飽和状態に陥ってしまうという問題がある。これに対して、ネットワーク装置内で複雑な処理を行い、専用メッセージをやり取りしなくてはならないスパニングツリープロトコルを実装せずに、ループを検出した各ネットワーク装置が自律的に動作し、ループ接続されているポートのパケット遮断を適正に行うことで、ループ接続を回避したネットワークを構築するという効果がある。

【発明を実施するための最良の形態】

【００１０】

（実施例１）

図を用いて本発明の実施例を詳細に説明する。

【００１１】

複数のポートが搭載されているスイッチングHUBを例に挙げ、ある一定時間内に複数ポートで同一の送信元アドレスのパケットを繰り返し受信することでループ接続を検出するスイッチングHUBに本発明を適用した場合のブロック図を図2に示し、詳細を述べる。

【００１２】

ポートの受信部201ではポートで受信されるパケットを物理層レベルで受信する。パケット処理部202ではパケットの受信処理及び送信処理を行う。パケット解析部203ではポートに受信したパケットの送信元アドレスと宛先アドレス及び、ポートから送信するパケットの送信元アドレスを解析する。受信パケットから解析された送信元アドレスはアドレステーブル204に出力し、アドレステーブル204からスイッチングすべきポート番号を取得する。同様に受信パケットから解析された送信元アドレスは学習処理及びループ検出のためにアドレステーブル204に出力する。また、ループを検出したポートのうちパケット遮断動作を行わなかったポートからブロードキャストパケットを送信する場合と、パケット遮断を行ったポートでパケットを受信した場合は、解析された送信元アドレスをループ確認用アドレス記憶部205に出力する。

【００１３】

ループ確認用アドレス記憶部205はパケット解析部203から入力された送信元アドレスを、記憶及び比較してパケット遮断部に遮断中止信号を出力する。アドレステーブル204はパケットのアドレスとスイッチングHUBのポート番号を対応付けて管理しており、各スイッチングHUBに1つ搭載されている。アドレステーブル204はパケット解析部203より受信した宛先アドレスをもとに検索を行い、対応付けられているポート番号をパケット解析部203に出力する。また、パケット解析部203より受信パケットの送信元アドレスが、アドレステーブル204に登録されているかどうかを検索し、登録されていなければ学習処理として

送信元アドレスが別のポートに登録されており、ループ接続が行われていると判断した場合、ループ検出部205にポートごとのエラー信号を出力する。ループ検出部206はアドレステーブル204よりエラー信号を受信するとループを検出したと断定し、乱数発生部207に起動信号を出力する。ループ検出部206から起動信号を受信した乱数発生部207は乱数を発生させ、その乱数を元に時間Tを算出する。乱数発生部207は起動信号が入力されてからT時間経過後にパケット遮断部に対してパケット遮断信号を出力する。パケット遮断部208は通常の通信では動作していないが、乱数発生部207からパケット遮断信号が入力されると、スイッチング部209からのパケット及びパケット解析部203からのパケットを遮断し破棄する。また、ループ確認用アドレス記憶部から遮断中止信号が入力されると、遮断動作を中止し通常の通信状態になる。スイッチング部209は受信したパケットを正しいポートにスイッチし、送信部210からパケットが送信されるように動作する。

【００１４】

本発明において、スイッチングHUBに実装されたループ検出部206で、ループが検出された場合のパケット遮断のフローチャートを図３に示す。

【００１５】

図３のステップS301ではネットワーク上でループ接続が行われておらず、通常の通信状態である。ここで、スイッチングHUBのポートMとポートNにつながる機器を通して、ネットワークでループ接続が構成されるとステップS302でループを検出し、ステップS303でポートM、Nでループがあると判定される。ループを検出するとスイッチングHUBは乱数発生部207において乱数を発生し、その乱数をもとに待ち時間Tを算出する(ステップS304)。時間Tは基本的に任意であるが、送信元アドレスからループを検出する場合、ループ接続されている各スイッチングHUBでループを検出するタイミングがほぼ同時であると推定され、パケットがネットワークを周回してくる時間を、スイッチングHUB間で差分として持たせておくことが望ましい。例えば、スイッチングHUB1が算出した時間T1とスイッチングHUB2が算出した時間T2の差が、パケットがループネットワークを周回している時間より大きくなるように時間Tを算出する。このような時間を算出するためには、発生させる乱数を2以上の整数とし、

時間T＝乱数×パケットが周回する時間

のような算出方法を行えばよい。上記のような算出方法が一例として考えられる。時間Tを算出したスイッチングHUBはその時点から時間Tが経過するまで待機状態に入る(ステップS305)。T時間が経過するとステップS306において、再びポートM、Nにおいてループが検出されるかを判定する。ステップS306にて規定時間内にポートM、Nでループが検出されなかった場合は他のスイッチングHUBがパケットを遮断したか、もしくはネットワークの構成が変更され、ネットワーク上にループ接続がなくなったと判断し、ステップS301の初期状態に戻る。ステップS306にてポートM、Nで再びループが検出された場合、ステップS307に進みポートMもしくはポートのNのどちらか一方についてパケット遮断部208でパケットを遮断する。ループを検出したポートMとポートNのどちらかを遮断することにより、ネットワーク上のループ接続が回避されたとしてパケット遮断処理を終了する。ステップS306でいう規定時間とはパケットが周回してくる時間より十分長い時間を設定しておくとよい。

【００１６】

ネットワーク上にループ接続が行われていた場合、各スイッチングHUBは自律的に図３のフローチャートを実行する。各スイッチングHUBが発生させた乱数から算出したT時間待機してからパケット遮断動作に入ることで、図４のようにスイッチングHUB Xのポート4とスイッチングHUB Zのポート4が同時にパケット遮断を行い、ネットワークが分離されてしまうことを回避しているが、検出するタイミングと待機する時間Tによっては必ずしも回避できるとは言えない。また、図５のようにループ接続を正常に回避できたとしても、スイッチングHUB Yのポート1とスイッチングHUB Zのポート4を接続しているケーブルがユーザによって取り除かれた場合、スイッチングHUB Xのポート4におけるパケット遮断は中止

図６に示す。

【００１７】

図６のステップS601では、、スイッチングHUBが図3に示すパケット遮断フローチャートに従い、ポートMとポートNでループを検出し、ポートNをパケット遮断した状態にある。ポートNをパケット遮断したスイッチングHUBはステップS602において、ポートMからブロードキャストパケットを送信するかどうかを監視しておく。ポートMからブロードキャストパケットを送出する場面が発生したら、そのパケットの送信元アドレスをループ確認用アドレス記憶部205に記憶する。この時ループ確認用アドレス記憶部の内容は図７のようになる。その後、パケットの遮断動作に入っているポートNで受信するパケットの送信元アドレスを監視する(ステップS604)。もし、図5のように自スイッチングHUBによって行ったパケット遮断動作が、ネットワーク全体から見て正常に行われている場合はステップS603から送出したブロードキャストパケットが必ずポートNに到着するはずである。逆に、ポートNに到着しない場合は図4のように他のスイッチングHUBでもパケット遮断動作を行ってしまいネットワークが分離されてしまった可能性がある。ステップS605において規定時間内(パケットが周回してくる時間より十分長い時間を設定しておくとよい)に記憶してある送信元アドレスのパケットを受信したかどうかを判定し、受信すればステップS606に進み、パケット遮断によりループ接続が正常に回避されたとして、ループ確認用アドレス記憶部のポートMの内容を消去する。

【００１８】

その後、ステップS602に戻り、ポートMからブロードキャストパケットが送信されるかどうかを監視しておく。また、ステップS605において規定時間内に記憶してある送信元アドレスのパケットが受信されなかった場合、ステップS607において自スイッチングHUBのパケット遮断によってネットワークが分離されてしまったと判断する。その後ステップS608においてループ確認用アドレス記憶部に記憶されている送信元アドレスを消去し、ポートNのパケット遮断を中止する(ステップS609)。このように自スイッチングHUBのパケット遮断によるネットワークへの悪影響を検出し回避する。このフローチャートでは1度正常遮断判定を行った後に、ポートMから送出されるすべてのブロードキャストパケットについて判定を行っているが、定期的に監視するだけでもよい。

【００１９】

ここで、複数のスイッチングHUBが図６の正常遮断判定フローチャートによりパケット遮断を中止し、ループ構成を再構築してしまうことも考えられる。しかし、再び図3のパケット遮断フローチャートに従って、各スイッチングHUBが新たに発生させる乱数によって算出する時間Tだけ待機してパケット遮断を行うので正常なネットワークを構築できる。仮に再びネットワークの分離が発生してしまったとしても、各スイッチングHUBが図３のパケット遮断フローチャートに従いパケットを遮断し、その後、図６の正常遮断判定フローチャートにて判定を行うというアルゴリズムを繰り返すことにより、いずれ必ず適正なネットワークを構築できる。

【００２０】

更に、ユーザによってネットワーク構成が変更され、パケット遮断は中止しなければならない場合においても、図６の正常遮断判定フローチャートにより、パケット遮断を行っているポートを中止し、適正なネットワークを構築することができる。

【００２１】

（実施例２）

複数のポートが搭載されているスイッチングHUBを例に挙げ、送信元アドレスが自スイッチングHUBであるパケットをブロードキャスト送信し、当該パケットが自スイッチングHUBで受信された時、ループ接続と判定するスイッチングHUBに本発明を適用した場合のブロック図を図８に示す。

【００２２】

ポートの受信部801ではポートで受信されるパケットを物理層レベルで受信する。パケ

に受信したパケットの送信元アドレスと宛先アドレスを解析する。受信パケットから解析された送信元アドレスはアドレステーブル804に出力し、アドレステーブル804からスイッチングすべきポート番号を取得する。同様に受信パケットから解析された送信元アドレスは学習処理のためにアドレステーブル804に出力する。また、受信した送信元アドレスはループパケット検出部805にも出力する。アドレステーブル804はパケットのアドレスとスイッチングHUBのポート番号を対応付けて管理しており、各スイッチングHUBに1つ搭載されている。アドレステーブル804はパケット解析部803より受信した宛先アドレスをもとに検索を行い、対応付けられているポート番号をパケット解析部803に出力する。また、パケット解析部803より受信パケットの送信元アドレスが、アドレステーブル804に登録されているかどうかを検索し、登録されていなければ学習処理としてその送信元アドレスを受信したポートに割り当てる。アドレステーブル804にて検索した送信元アドレスが別のポートに登録されていれば、その送信元アドレスを新しいポートに割り当てる。ループ検出パケット送出部は宛先がブロードキャストで送信元アドレスが自スイッチングHUBになるようなパケットを生成し、すべてポートの送信部807へ送信する。ループパケット検出部805は受信したパケットの送信元アドレスが自スイッチングHUBのアドレスに一致した場合、乱数発生部に起動信号を出力する。

【００２３】

また、検出されるべきパケットが検出されない場合は、パケット遮断部に対してパケット遮断中止信号を出力する。ループパケット検出部から起動信号を受信した乱数発生部808は乱数を発生させ、その乱数を元に時間Tを算出する。乱数発生部808は起動信号が入力されてからT時間経過後にパケット遮断部809に対してパケット遮断信号を出力する。パケット遮断部809は通常の通信では動作していないが、乱数発生部808からパケット遮断信号が入力されると、スイッチング部810からのパケット及びパケット解析部803からのパケットを遮断し破棄する。また、ループパケット検出部805から遮断中止信号が入力されると、遮断動作を中止し通常の通信状態になる。スイッチング部810は受信したパケットを正しいポートにスイッチを行う。

【００２４】

本発明において、スイッチングHUBに実装されたループパケット検出部805で、ループが検出された場合のパケット遮断のフローチャートを図９に示す。

【００２５】

図９のステップS901ではネットワーク上でループ接続が行われておらず、通常の通信状態である。ここで、全ポートにループ検出用パケットを送出する（ステップS902）。ループ検出用パケットの送出タイミングは定期的に行うか、自スイッチングHUBの電源投入時及び自スイッチングHUBのポートを監視しておき、その状態が変化した時などが考えれる。ループ検出用パケットを送出するとステップS903において、規定時間内にループを検出できるかを判断する。ここでいう規定時間とはパケットが周回してくる時間より十分長い時間を設定しておくとよい。規定時間内にループを検出できなかった場合はステップS901の初期状態に戻る。規定時間内にループを検出するとスイッチングHUBは乱数発生部808において乱数を発生し、その乱数をもとに待ち時間Tを算出する（ステップS904）。時間Tは基本的には任意である。時間Tを算出したスイッチングHUBはその時点から時間Tが経過するまで待機状態に入る（ステップS905）。T時間が経過するとステップS906において、全ポートにループ検出用パケットを送出する。その後、ステップS907において規定時間内に再び同一ポートからループが検出されたら、ループを検出したポートのどちらか一方をパケット遮断し、パケット遮断処理を終了する。ステップS907において、ループが検出されなかった場合は他のスイッチングHUBがパケットを遮断したか、もしくはネットワークの構成が変更され、ネットワーク上にループ接続がなくなったと判断し、ステップS901の初期状態に戻る。

【００２６】

パケットを遮断した後に、ネットワークが適正な構成になっているかを診断するために

図９に示すパケット遮断フローチャートに従い、ポートMとポートNでループを検出し、ポートNをパケット遮断した状態にある。ポートNを遮断したスイッチングHUBはステップS1002において、ポートMからループ検出用パケットを送出する。その後、ステップS1003で規定時間内(パケットが周回してくる時間より十分長い時間を設定しておくとよい)にポートNでループ検出用パケットが検出できるか監視する。規定時間内に検出できた場合は、ステップS1004に進み、ループ検出用パケットの送出を周期的に行うために一定時間待機する。一定時間待機した後に、ステップS1002に戻る。ステップS1003において、規定時間内に検出できなかった場合は、ポートNのパケット遮断によってネットワークが分離されていると判断(ステップS1005)し、ステップS1006においてポートNのパケット遮断を中止する。

【００２７】

ここで、複数のスイッチングHUBが図１０の正常遮断判定フローチャートによりパケット遮断を中止し、ループ構成を再構築してしまうことも考えられる。しかし、再び図９のパケット遮断フローチャートに従って、各スイッチングHUBが新たに発生させる乱数によって算出する時間Tだけ待機してパケット遮断を行うので正常なネットワークを構築できる。仮に再びネットワークの分離が発生してしまったとしても、各スイッチングHUBが図９のパケット遮断フローチャートに従いパケットを遮断し、その後、図10の正常遮断判定フローチャートにて判定を行うというアルゴリズムを繰り返すことにより、いずれ必ず適正なネットワークを構築できる。

【００２８】

更に、ユーザによってネットワーク構成が変更され、パケット遮断は中止しなければならない場合においても、図１０の正常遮断判定フローチャートにより、パケット遮断を行っているポートを中止し、適正なネットワークを構築することができる。

【図面の簡単な説明】

【００２９】

【図１】ネットワーク装置のループ接続例。

【図２】送信元アドレスからループを検出するスイッチングHUBのブロック図。

【図３】パケット遮断フローチャート（送信元アドレスからループを検出した場合）。

【図４】パケット遮断によるネットワークの分離。

【図５】パケット遮断による正常なネットワークの構成。

【図６】正常遮断判定フローチャート（送信元アドレスからループを検出した場合）。

【図７】ループ確認用アドレス記憶部の内容。

【図８】ループ検出用パケットを送出してループを検出するスイッチングＨＵＢのブロック図。

【図９】パケット遮断フローチャート（ループ検出用パケットを送出する場合）。

【図１０】正常遮断判定フローチャート（ループ検出用パケットを送出する場合）。

【符号の説明】

【００３０】

201　受信部
202　パケット処理部
203　パケット解析部
204　アドレステーブル
205　ループ確認用アドレス記憶部
206　ループ検出部
207　乱数発生部
208　パケット遮断部
209　スイッチング部
210　送信部

【図１】

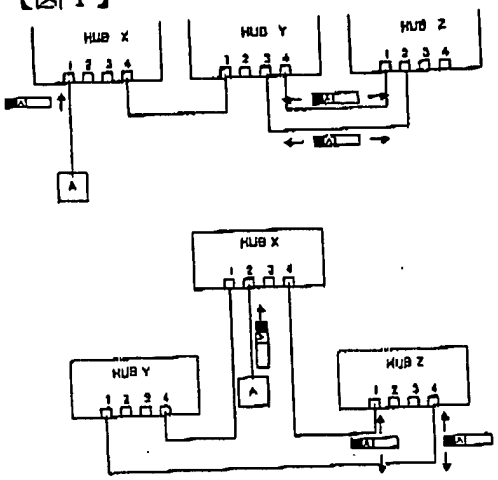
HUB X
HUB Y
HUB Z
A

【図２】

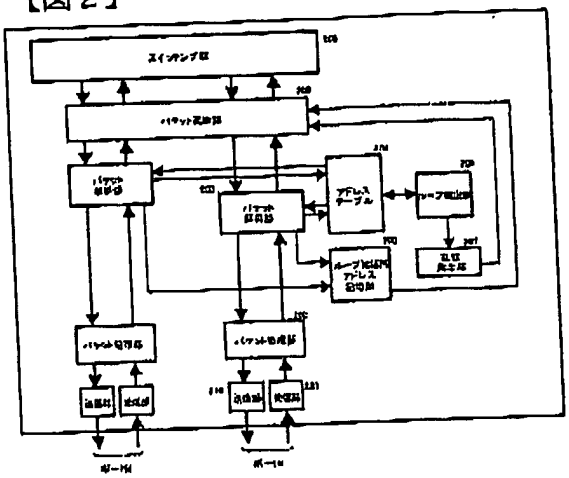

【図３】

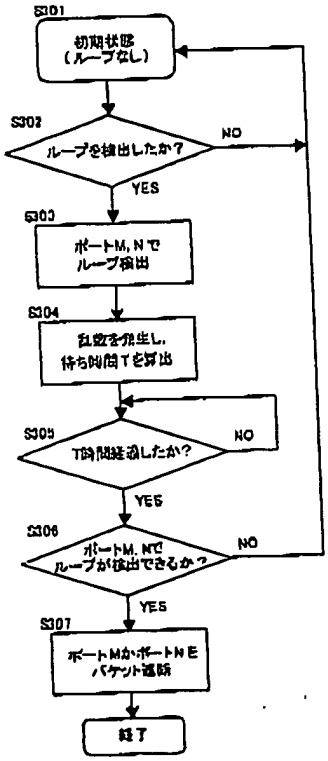
S301
初期状態
（ループなし）
S302
ループを検出したか？
NO
YES
S303
ポートM, Nで
ループ検出
S304
乱数を発生し，
待ち時間Tを算出
S305
T時間経過したか？
NO
YES
S306
ポートM, Nで
ループが検出できるか？
NO
YES
S307
ポートMかポートNに
パケット遮断
終了

【図４】

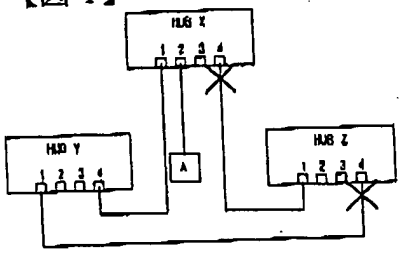
HUB X
HUB Y
HUB Z
A

【図５】

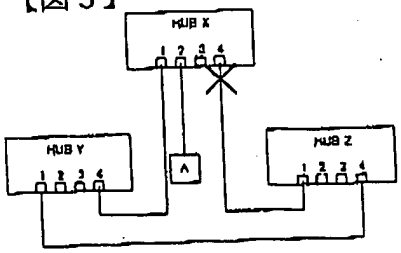
HUB X
HUB Y
HUB Z
A

【図６】

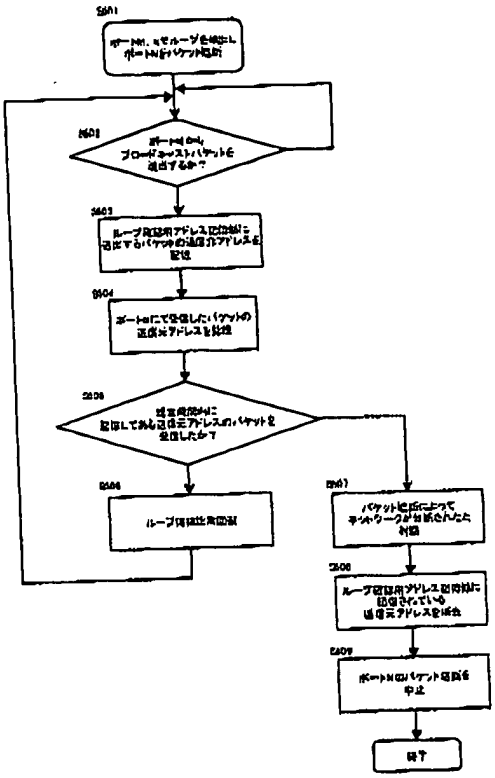

【図７】

ループポート	送信元アドレス
M	XX XX XX XX XX XX

【図８】

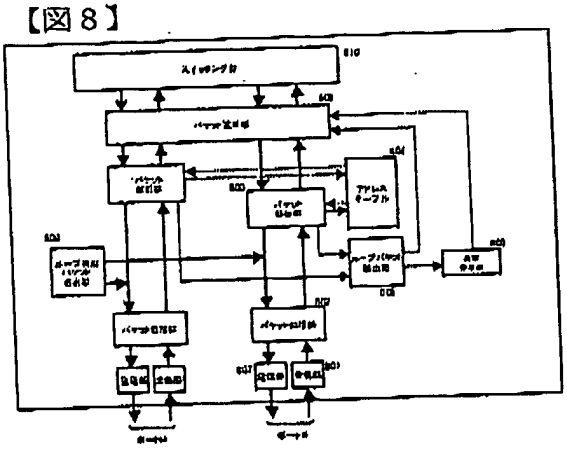

【図９】

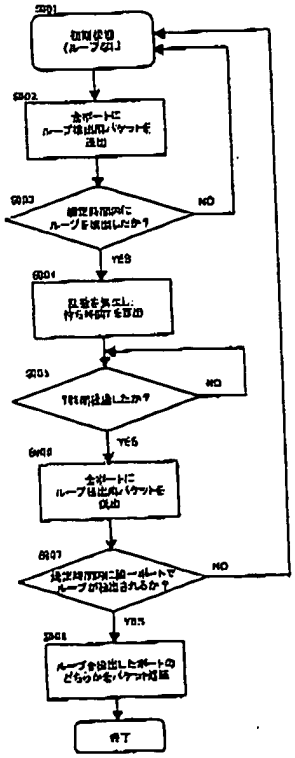

【図１０】

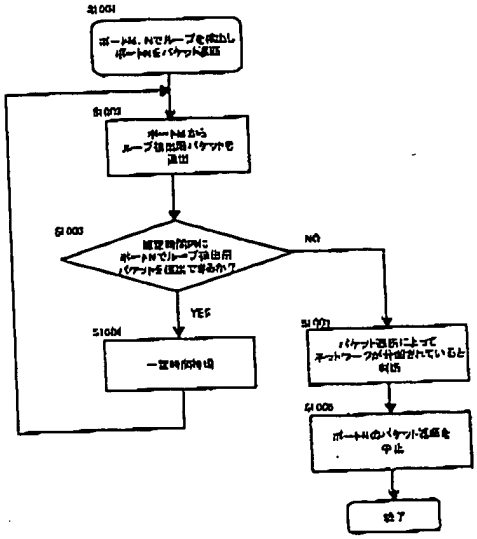

PATENT ABSTRACTS OF JAPAN

(11)Publication number : 09-080085
(43)Date of publication of application : 28.03.1997

(51)Int.Cl. G01R 19/00
G01R 13/20
G12B 17/02
H05K 9/00

(21)Application number : 07-262314
(22)Date of filing : 14.09.1995

(71)Applicant : HIOKI EE CORP
(72)Inventor : TARASAWA KOUICHI
KURASHIMA TAKAYUKI

(54) METHOD FOR REDUCING COMMON MODE NOISE IN MEASURING INSTRUMENT

(57)Abstract:
PROBLEM TO BE SOLVED: To suppress the effect of common mode noise on an input unit by providing a ground path, added with a capacitor connected with the chassis part of a measuring instrument, even for the feeder line other than the ground (GND) line.
SOLUTION: A GND line L3 is connected with the chassis part 12a of a measuring instrument body 12 through a GND side ground path E1 added with a capacitor C1. A Vcc line L1 is connected through a Vcc side ground path E3 added with a capacitor C3 with the chassis part 12a and a common line L2 is connected through a common side ground path E2 added with a capacitor C2 with the chassis part 12a. More specifically, the lines L1-L3 formed between a power supply circuit 19 and a measuring circuit 18 provide ground paths E1-E3 to the chassis part 12a through capacitive coupling of the capacitors C1-C3 thus passing the common mode noise to the chassis part 12a side. Consequently, the effect of common mode noise on the measuring circuit 18 of input unit 17 is suppressed and a correct waveform can be displayed.

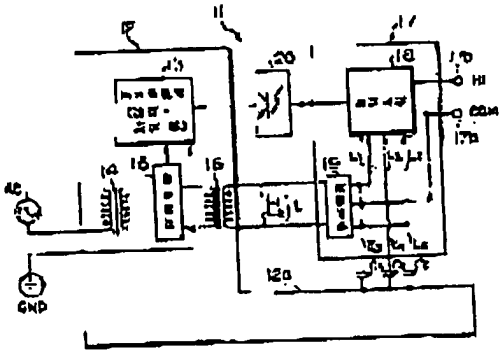

(19)日本国特許庁（ＪＰ）

(12) 公開特許公報（Ａ）

(11)特許出願公開番号

特開平9－80085

(43)公開日 平成９年(1997)３月28日

(51)Int.Cl.⁶	識別記号	庁内整理番号	ＦＩ	技術表示箇所
Ｇ０１Ｒ 19/00			Ｇ０１Ｒ 19/00	Ｌ
13/20		9016－2Ｇ	13/20	Ｐ
Ｇ１２Ｂ 17/02			Ｇ１２Ｂ 17/02	
Ｈ０５Ｋ 9/00			Ｈ０５Ｋ 9/00	Ｋ

審査請求 未請求 請求項の数１ ＦＤ （全 ５ 頁）

(21)出願番号 特願平7－262314

(22)出願日 平成７年(1995)９月14日

(71)出願人 000227180
日置電機株式会社
長野県上田市大字小泉字桜町81番地

(72)発明者 多羅沢 公一
長野県上田市大字小泉字桜町81番地 日置電機株式会社内

(72)発明者 倉島 孝行
長野県上田市大字小泉字桜町81番地 日置電機株式会社内

(74)代理人 弁理士 熊谷 浩明

(54)【発明の名称】 測定器におけるコモンモードノイズ低減方法

(57)【要約】

【課題】 測定器を構成し、フローティングされた入力ユニットを備える測定回路がコモンモードノイズにより影響を受ける不都合があった。

【解決手段】 絶縁トランス１６を介してフローティングされた電源ラインＬによりそれぞれが備える電源回路１５，１９相互が接続されてなる測定器本体１２と入力ユニット１７とで構成され、電源回路１９と測定回路１８との間に形成されるＶｃｃラインL_1とコモンラインL_2とＧＮＤラインL_3とからなる電源ラインＬのうち、測定回路１８の基準点であるＧＮＤラインL_3には測定器本体１２のシャーシ部１２ａとの間にコンデンサC_1を付加させたＧＮＤ側接地経路E_1を形成してなる測定器において、入力ユニット１７のＶｃｃラインL_1とコモンラインL_2とには、シャーシ部１２ａとの間にコンデンサC_3，C_2を付加させたＶｃｃ側接地経路E_3とコモン側接地経路E_2とを形成して測定回路１８が受けるコモンモードノイズによる影響を低減させた。

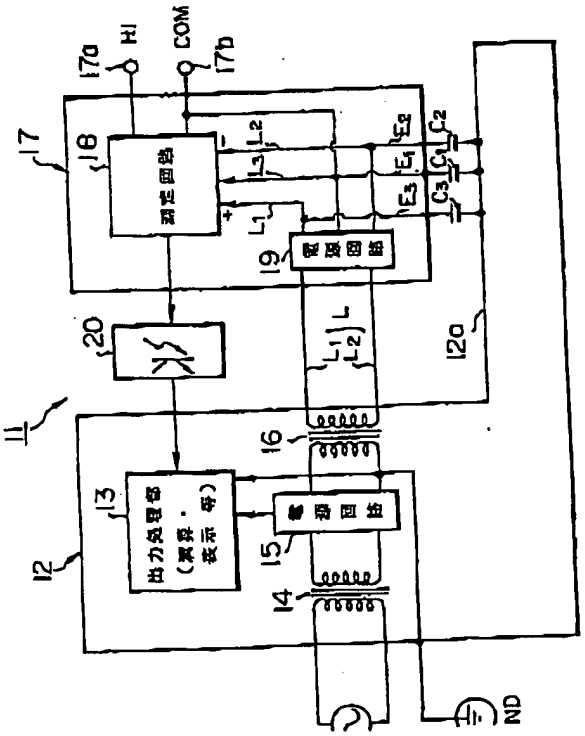

【特許請求の範囲】

【請求項1】 絶縁トランスを介してフローティングされた電源ラインによりそれぞれが備える電源回路相互が接続されてなる測定器本体と入力ユニットとで構成され、入力ユニットが備える電源回路と測定回路との間に形成されるＶｃｃラインとコモンラインとＧＮＤラインとからなる電源ラインのうち、前記測定回路の基準点であるＧＮＤラインには前記測定器本体のシャーシ部との間にコンデンサを付加させたＧＮＤ側接地経路を形成してなる測定器において、

前記入力ユニットの前記Ｖｃｃラインとコモンラインとには、前記シャーシ部との間にコンデンサを付加させたＶｃｃ側接地経路とコモン側接地経路とを形成して前記測定回路が受けるコモンモードノイズによる影響を低減させることを特徴とする測定器におけるコモンモードノイズ低減方法。

【発明の詳細な説明】

【０００１】

【発明の属する技術分野】本発明は測定器におけるコモンモードノイズ低減方法に係り、さらに詳しくは、フローティングされた入力ユニットを備える測定回路が受けるコモンモードノイズによる影響を少なくすることができる測定器におけるコモンモードノイズ低減方法に関するものである。

【０００２】

【従来の技術】波形記録計などの測定器においては、種々の要因により発生するノイズが測定値に好ましくない影響を及ぼすことから、できるだけその影響を少なくするためのノイズ対策が講じられている。

【０００３】ところで、測定器に影響を与えるノイズは、等価的にノーマルモードノイズ（線間雑音）とコモンモードノイズ（対地雑音）とに分けることができ、このうち、ノーマルモードノイズは、例えば電磁誘導による雑音などのように測定回路の線間に入り込むノイズを意味し、コモンモードノイズは、静電誘導による雑音などのように大地などの基準点（ＧＮＤ）に対し各線間に同一に現れるノイズを意味するとされている。

【０００４】図３は、測定器本体２と入力ユニット３とで構成されている測定器１におけるコモンモード電圧V_{COM}に関しての各電流（I_1～I_4）の流れを模式的に示す説明図であり、入力Ｈｉ側端子５には配線抵抗Z_1が、入力ＣＯＭ側端子６には配線抵抗Z_2が存在する。

【０００５】また、入力ユニット３には、内部部品に由来する入力抵抗Z_{in}が存在するほか、配線されている銅線の抵抗や絶縁からの漏電、浮遊容量（コンデンサ）などにより入力Ｈｉ側端子５側と入力ユニット３のケース３ａとの間に発生する絶縁抵抗Z_3と、入力ＣＯＭ側端子６側と入力ユニット３のケース３ａとの間に発生する絶縁抵抗Z_4と、入力ユニット３のケース３ａと測定器とが存在する。

【０００６】この場合、配線抵抗Z_1と配線抵抗Z_2とがほぼ等しいとすると、入力抵抗Z_{in}には同じ電圧が加わって$I_3=0$となる結果、絶縁抵抗Z_5に流れる電流も$I_1+I_2=I_4$となり、絶縁抵抗Z_5の電圧は影響を受けないことになる。よって、$Z_3 \neq Z_4$の場合には、入力Ｈｉ側端子５と入力ＣＯＭ側端子６との間にコモンモード電圧V_{COM}の影響が現れることになる。

【０００７】図４は、前記測定器１における絶縁抵抗Z_5に由来する影響を少なくするため、従来から行われている手法を具体的に説明するものであり、前記入力ユニット３は、入力Ｈｉ側端子５と入力ＣＯＭ側端子６とを介して取り込まれた入力信号を測定値として検出する測定回路４を備えている。

【０００８】ところで、絶縁抵抗Z_5は、ひとつのインピーダンスとみなされることから、入力ユニット３をケース３ａ内に収納しているものの、このケース３ａと前記測定器本体１のシャーシ部１ａとの間の距離、及びこの距離に起因して発生する容量性インピーダンスはその分布が均一ではないため、コモンモード電圧V_{COM}の周波数により絶縁抵抗Z_5が複数できた形、つまり、$Z_3+Z_5' \neq Z_4+Z_5''$となり影響を受けることになる。

【０００９】このため、図示しない電源回路と入力ユニット３の測定回路４との間に形成されるＶｃｃラインL_1とコモンラインL_2とＧＮＤラインL_3とからなる電源ラインＬのうち、前記測定回路４の基準点であるＧＮＤラインL_3と前記測定器本体２のシャーシ部２ａとの間にコンデンサC_1を介在させたＧＮＤ側接地経路E_1を形成することにより絶縁抵抗Z_5を交流的に十分に小さな値とし、前記測定器１における絶縁抵抗Z_5に由来する影響を少なくしている。

【００１０】

【発明が解決しようとする課題】ところで、上記従来手法によっても入力ユニット３における入力Ｈｉ側端子５と入力ＣＯＭ側端子６との間にかかるコモンモードノイズ（コモンモード電圧V_{COM}）を効果的に低減することはできる。

【００１１】しかし、上記従来手法による場合、入力Ｈｉ側端子５と入力ＣＯＭ側端子６とを介して入力ユニット３側に回り込むコモンモードノイズに対しては有効であるとしても、入力ユニット３が備えるスイッチング電源などの電源回路から発生するノイズが入力ユニット３の側にコモンモードノイズとなってかかり、このようなコモンモード電圧により振られてしまうことに対し比較的効果が薄くなる不都合があった。

【００１２】すなわち、図４に示すように入力ユニット３の側のＧＮＤラインL_3とシャーシ部２ａとの間にのみコンデンサC_1を付加した接地経路E_1を形成してあ[illegible]電源ラインＬにおけるＶｃｃラインL_1と

GNDラインL_3との両方にかかっているコモンモードノイズのうち、GNDラインL_3側のコモンモードノイズのみが低減されることになる。このため、測定回路4の基準点（入力用GND）からみると、VccラインL$_1$はコモンモード電圧V_{COM}により振られることになり、測定回路4にもその影響が及ぶ結果、比較的効果が薄くなる不具合があった。

【0013】本発明は従来技術にみられた上記課題に鑑み、その目的は、GNDライン以外の電源ラインにも測定器本体のシャーシ部との間にコンデンサを付加した接地経路を設けることで、入力ユニットの測定回路の側が受けるコモンモードノイズによる影響を少なくできる測定器におけるコモンモードノイズ低減方法を提供することにある。

【0014】

【課題を解決するための手段】本発明は上記目的を達成すべくなされたものであり、その構成上の特徴は、絶縁トランスを介してフローティングされた電源ラインによりそれぞれが備える電源回路相互が接続されてなる測定器本体と入力ユニットとで構成され、入力ユニットが備える電源回路と測定回路との間に形成されるVccラインとGNDラインとコモンラインとからなる電源ラインのうち、前記測定回路の基準点であるGNDラインに前記測定器本体のシャーシ部との間にコンデンサを付加させたGND側接地経路を形成してなる測定器において、前記入力ユニットの前記Vccラインとコモンラインとには、前記シャーシ部との間にコンデンサを付加させたVcc側接地経路とコモン側接地経路とを形成して前記測定回路が受けるコモンモードノイズによる影響を低減させることにある。

【0015】

【発明の実施の形態】図1は本発明方法が適用される測定器の要部構成の一例を示す説明図であり、測定器11は、測定器本体12と入力ユニット17とで構成されており、このうち、測定器本体12は、CPUを含む中央処理部やCRTなどの表示部などで構成される出力処理部13を備え、この出力処理部13には交流電源ACから絶縁トランス14と電源回路15とを経由して給電されるようになっている。

【0016】一方、入力ユニット17は、入力Hi側端子17aと入力COM側端子17bとを介して取り込まれた入力信号を測定値として検出する測定回路18を備えており、電源回路19から給電される測定回路18が検出する測定値は、アイソレータなどからなる絶縁増幅器20を介して測定器本体12の出力処理部13の側に送出できるようになっている。

【0017】この場合における測定器本体12の側の電源回路15と入力ユニット17の側の電源回路19とは、絶縁トランス16を介在させてフローティングされ

ラインLにより電気的に絶縁された状態のもとで相互に接続されている。

【0018】しかも、入力ユニット17が備える電源回路19と測定回路18との間に形成されるVccラインL_1とコモンラインL_2とGNDラインL_3とからなる電源ラインLのうち、前記測定回路18の基準点であるGNDラインL_3には前記測定器本体12のシャーシ部12aとの間にコンデンサC_1を付加したGND側接地経路E_1が、前記コモンラインL_2には前記シャーシ部12aとの間にコンデンサ（結合容量を含む）C_2を付加したコモン側接地経路E_2がそれぞれ形成されている。

【0019】さらに、入力ユニット17が備える電源回路19と測定回路18との間に形成される前記VccラインL_1と測定器本体12のシャーシ部12aとの間には、コンデンサC_3を付加したVcc側接地経路E_3が形成されている。

【0020】本発明は上述したようにして構成されているので、図示しないマザーボードを介するなどして組み合わされる測定器本体12と入力ユニット17とは、絶縁トランス16を介在させてフローティングされている電源ラインLによりそれぞれの電源回路15，19相互を電気的に絶縁させた状態のもとで接続させることができる。

【0021】ところで、図3に模式的に示した絶縁成分と容量成分とを含むインピーダンスZ_3とZ_4とは、入力ユニット17内の配線長やその面積の大きさが原因となって発生する例が多い。

【0022】本発明方法においては、電源ラインLにおける前記GNDラインL_3はコンデンサC_1を付加したGND側接地経路E_1により、VccラインL$_1$はコンデンサC_3を付加したVcc側接地経路E_3により、コモンラインL_2はコンデンサC_2を付加したコモン側接地経路E_2によりそれぞれシャーシ部12aと接続することができるので、図2に模式的に示すように電源ラインLの側に生ずるコモンモードノイズ（Z_3，Z_4，Z_5）をそれぞれシャーシ部12aの側に流し込むルートを形成することができる。

【0023】このため、入力Hi側端子17aと入力COM側端子17bとの間にかかるコモンモードノイズは、GNDラインL_3→コンデンサC_1→GND側接地経路E_1→シャーシ部12aへと、VccラインL$_1$の側に誘起されるコモンモードノイズは、VccラインL$_1$→コンデンサC_3→Vcc側接地経路E_3→シャーシ部12aへと、コモンラインL_2の側に誘起されるコモンモードノイズは、コモンラインL_2→コンデンサC_2→コモン側接地経路E_2→シャーシ部12aへとそれぞれ逃がすことができる。

【0024】したがって、各電源から発生するインピーダンスを交流的に小さくすることで、Z$_3$，Z$_4$，Z$_5$は

$Z_4 + Z_5$″の影響を小さくし、前記入力ユニット17が有する測定回路18が受けるコモンモードノイズによる影響を少なくして測定器11が備える表示部に対しノイズの少ない正しい波形を表示させることができることになる。

【0025】

【発明の効果】以上述べたように本発明によれば、入力ユニットが備える電源回路と測定回路との間に形成される電源ラインは、付加させたコンデンサの結合容量のもとでシャーシ部との間に接地経路を形成してコモンモードノイズをシャーシ部の側に逃がすことができるので、前記入力ユニットが備える測定回路が受けるコモンモードノイズによる影響を少なくして表示部に対し正しい波形を表示させることができる。

【図面の簡単な説明】

【図1】本発明方法が適用される測定器の概略構成例を示す説明図である。

【図2】図1に示す測定器における入力ユニット側に発生するインピーダンスの状態を模式的に示す説明図である。

【図3】測定回路を備える入力ユニットに発生するインピーダンスの状態を模式的に示す説明図である。

【図4】従来からある測定器の要部構成例を示す説明図である。

【符号の説明】

11　測定器
12　測定器本体
12a　シャーシ部
13　出力処理部
14，16　絶縁トランス
15　電源回路
17　入力ユニット
17a　入力Hi側端子
17b　入力COM側端子
18　測定回路
19　電源回路
20　絶縁増幅部
L　電源ライン
L_1　Vccライン
L_2　コモンライン
L_3　GNDライン
E_1　GND側接地経路
E_2　コモン側接地経路
E_3　Vcc側接地経路
C_1～C_3　コンデンサ

【図1】

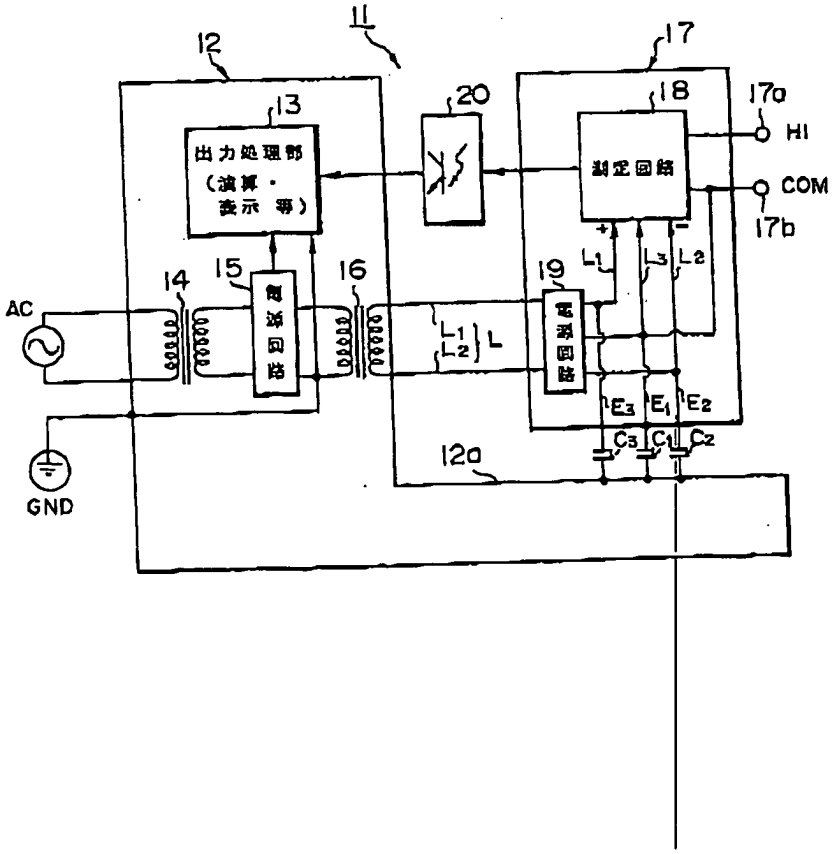

【図2】

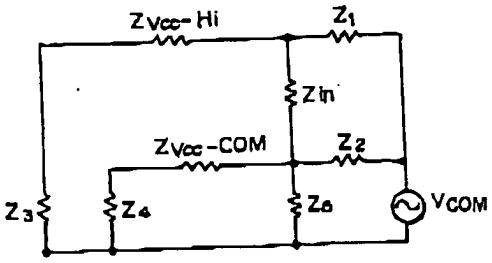

【図4】

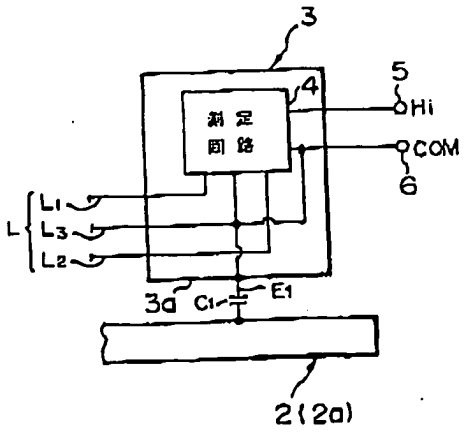

【図3】

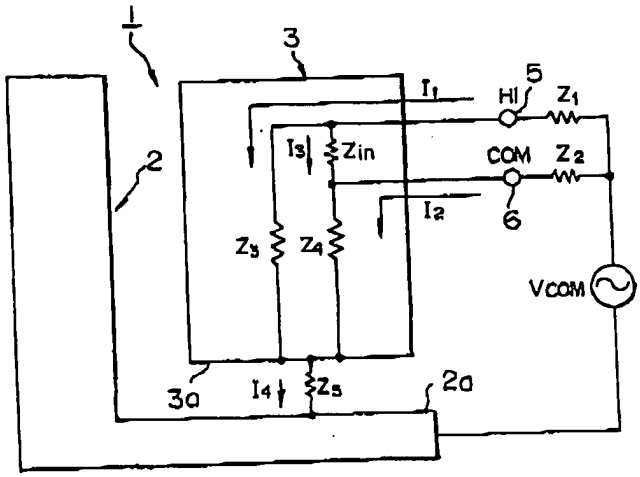

PATENT ABSTRACTS OF JAPAN

(11)Publication number : 08-094154
(43)Date of publication of application : 12.04.1996

(51)Int.Cl. F24F 11/02
F24F 11/02

(21)Application number : 06-232848
(22)Date of filing : 28.09.1994

(71)Applicant : HITACHI LTD
HITACHI SHIMIZU ENG KK

(72)Inventor : MOCHIZUKI MASAMICHI
YOSHIDA SATORU
WATANABE MASASHI
SATO TAKAHARU

(54) AIR CONDITIONER SYSTEM

(57)Abstract:
PURPOSE: To facilitate the wiring for transmitting data of units of an air conditioner, to eliminate erroneous wiring and to improve the executability of a wiring construction by employing the same transmitting mechanisms for transmitting and receiving transmission data at a transmission line in an indoor unit, an outdoor unit and a remote controller, and controlling the mechanism by the same control mechanism.
CONSTITUTION: A centralized controller 1 has a centralized controller control mechanism 8, and a transmitting mechanism 9 connected to the mechanism 8. A centralized control transmission line 2 is connected to the mechanism 9. Transmission data flowing to the line 2 is received by the mechanism 9, fetched, and sent to the mechanism 8. A first transmitting mechanism 9 provided at an outdoor unit 3a and a second transmitting mechanism 9 connected to an outdoor unit control mechanism 10 have the same structure as that of the mechanism 8 provided at the controller 1, and indoor units 3b, 3c,..., outdoor units 5a, 5b, 5c, 5d, and the mechanism 9 of a remote controller 7 are the same.

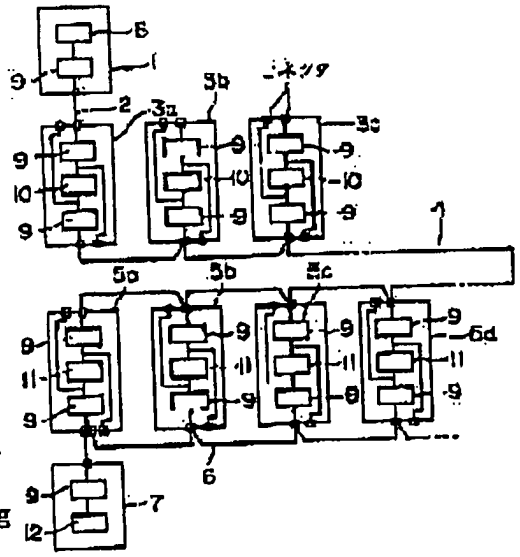

(19)日本国特許庁（ＪＰ）

(12) 公開特許公報（Ａ）

(11)特許出願公開番号

特開平8－94154

(43)公開日 平成８年(1996)４月12日

(51)Int.Cl.[6]	識別記号	庁内整理番号	ＦＩ	技術表示箇所
Ｆ２４Ｆ 11/02	１０３ Ｃ			
	Ｄ			
	１０４ Ａ			

審査請求 未請求 請求項の数６ ＯＬ （全 10 頁）

(21)出願番号 特願平6－232848

(22)出願日 平成６年(1994)９月28日

(71)出願人 000005108
株式会社日立製作所
東京都千代田区神田駿河台四丁目６番地

(71)出願人 000233310
日立清水エンジニアリング株式会社
静岡県清水市村松390番地

(72)発明者 望月 正道
静岡県清水市村松390番地 株式会社日立製作所空調システム事業部内

(72)発明者 吉田 悟
静岡県清水市村松390番地 株式会社日立製作所空調システム事業部内

(74)代理人 弁理士 鵜沼 辰之

最終頁に続く

(54)【発明の名称】 空調システム

(57)【要約】

【目的】 室外機、室内機、リモコン、集中コントローラなどからなる空調システムの各機器相互の制御用の伝送線の接続工事を容易にし、誤配線を無くす。

【構成】 集中コントローラ１と、該集中コントローラ１に集中制御用伝送線２で接続された室外機３ａと、該室外機３ａに空調制御用伝送線４で接続された室外機３ｂ，３ｃ，…及び室内機５ａ，５ｂ，５ｃ，５ｄと、室内機５ａ，５ｂ，５ｃ，５ｄにリモコン用伝送線６で接続されたリモコン７と、を含んで空調システムを構成し、各機器に、それぞれ伝送線２，４，６に接続されてデータを該伝送線に送受信する伝送機構９と、それら伝送機構９を制御する制御機構８，１０，１１，１２のいずれかとを設け、室外機３ｂ，３ｃには制御機構１０に接続してどの伝送線にも接続されていない伝送機構９を設け、伝送機構９を各機器とも同一構成とするとともに、制御機構８，１０，１１，１２も同一構成とした。

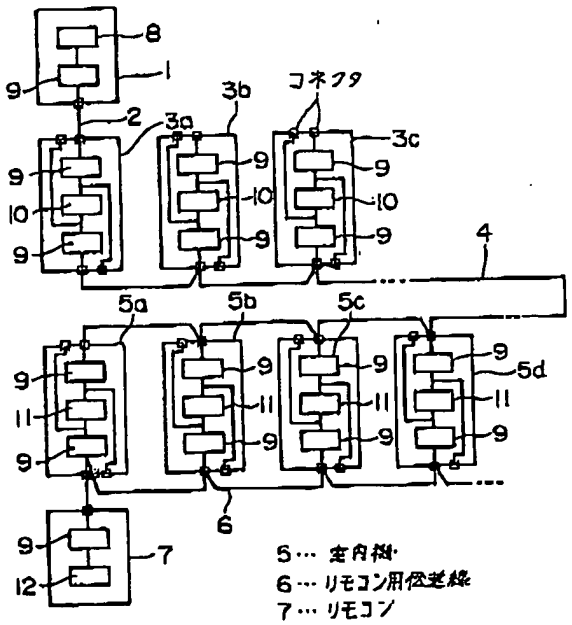

【特許請求の範囲】

【請求項1】 空調対象空間の空気と熱交換する室内機と、該室内機から伝送される熱量を外部に放出する手段を備えた室外機と、室内機に接続されて該室内機の遠隔制御を行うリモコンとを含んでなり、前記室内機と室外機の間及び前記室内機とリモコンとの間で、伝送線を介して互いにデータ伝送を行って制御する空気調和機において、前記室内機と前記室外機と前記リモコンに、前記伝送線に伝送データを送受信する同一の伝送機構と、該伝送機構を制御する同一の制御機構を設けたことを特徴とする空調システム。

【請求項2】 空調対象空間の空気と熱交換する室内機と、該室内機から伝送される熱量を外部に放出する手段を備えた室外機と、室内機に接続されて該室内機の遠隔制御を行うリモコンと、前記室内機及び室外機を制御する集中コントローラとを含んでなり、前記室内機と室外機の間、前記室内機とリモコンとの間及び前記室内機及び室外機と集中コントローラの間で、伝送線を介して互いにデータ伝送を行って制御する空気調和機において、前記室内機と前記室外機と前記リモコンに、前記伝送線に伝送データを送受信する同一の伝送機構と、該伝送機構を制御する同一の制御機構を設けたことを特徴とする空調システム。

【請求項3】 空調対象空間の空気と熱交換する室内機と、該室内機から伝送される熱量を外部に放出する手段を備えた室外機と、室内機に接続されて該室内機の遠隔制御を行うリモコンと、前記室内機及び室外機を制御する集中コントローラとを含んでなり、前記室内機と室外機の間、前記室内機とリモコンとの間及び前記室内機及び室外機と集中コントローラの間で、伝送線を介して互いにデータ伝送を行って制御する空気調和機において、前記室内機と前記室外機と前記集中コントローラに、前記伝送線に伝送データを送受信する同一の伝送機構と、該伝送機構を制御する同一の制御機構を設けたことを特徴とする空調システム。

【請求項4】 空調対象空間の空気と熱交換する室内機と、該室内機から伝送される熱量を外部に放出する手段を備えた室外機と、室内機に接続されて該室内機の遠隔制御を行うリモコンと、前記室内機及び室外機を制御する集中コントローラとを含んでなり、前記室内機と室外機の間、前記室内機とリモコンとの間及び前記室内機及び室外機と集中コントローラの間で、伝送線を介して互いにデータ伝送を行って制御する空気調和機において、前記室内機と前記室外機と前記集中コントローラと前記リモコンに、前記伝送線に伝送データを送受信する同一の伝送機構と、該伝送機構を制御する同一の制御機構を設けたことを特徴とする空調システム。

【請求項5】 室内機及び室外機に、各1個の前記制御機構と、この1個の制御機構に制御される2個の前記伝送機構とを設けられていることを特徴とする請求項1乃至4に記載の空調システム。

【請求項6】 室内機、室外機、リモコン、及び集中コントローラに設けられた伝送線用のコネクタが共通であることを特徴とする請求項1乃至5に記載の空調システム。

【発明の詳細な説明】

【0001】

【産業上の利用分野】本発明は、室内機と室外機の間、室内機とリモコンの間及び室外機と集中コントローラの間で、データ伝送手段を用いて遠隔制御する空調システムに関する。

【0002】

【従来の技術】従来の装置では、室内機と室外機の間、室内機とリモコンの間及び室外機と集中コントローラの間のデータ伝送は、それぞれ相手を特定することによりソフト、ハードを単純化する狙いで、別々の機能構成をもつ伝送機構で行われるように構成されていた。そのため、それらの伝送機構の間はそれぞれ別々の伝送線にて接続されるようになっていた。

【0003】なお、この種の装置として、特開平3－255846号公報記載のものがあげられる。

【0004】

【発明が解決しようとする課題】上記従来技術では、室内機と室外機の間、室内機とリモコンの間及び室外機と集中コントローラの間のデータを伝送する伝送線としてそれぞれ別々の伝送線を配置しなければならず、一つの機器につながる伝送線すべてを単一の伝送機構にまとめて配線するという点については考慮されていなかった。そのため、一つの機器、例えば室内機でもデータ伝送の相手先ごとに伝送線の接続端子やコネクタが設けられるため、それらの接続端子やコネクタへの外部配線や内部配線の取り違えがあり、点検、修正の手間を要し、施工性に欠けるという問題があった。なお、ここでいうリモコンは、機器本体と伝送線で接続されて当該機器との間で交信を行うものをいい、集中コントローラは複数の室内機、室外機へのデータの設定、変更、制御などを行うものをいう。

【0005】本発明の目的は、空調装置の各機器のデータ伝送用の配線を容易にし、誤配線を無くし、配線工事の施工性を向上させるにある。

【0006】

【課題を解決するための手段】本発明は、上記目的を達成するために、室内機、室外機、リモコン、集中コントローラのうちの少なくとも室内機、室外機を含む3機種に、それら相互間でデータ伝送を行なう同一の伝送機構と、その伝送を制御する同一の制御機構を設けたものである。

【0007】上記構成に加え、室内機、室外機に、それぞれ2個の同じ伝送機構を設けるようにしてもよい。そ

た、室内機、室外機、リモコン、及び集中コントローラの伝送機構と伝送線のコネクタを共通とすれば効果的である。

【0008】

【作用】室内機、室外機、リモコン、集中コントローラの相互間でデータ伝送を行なう同一の伝送機構は、室内機から来る運転情報（運転状態、各種センサデータなど）を受信すること、室内機に対して運転情報（運転停止、風量など）を送信すること、室外機から来る運転情報（運転状態、各種センサデータなど）を受信すること、室外機に対して運転情報（圧縮機のＯＮ／ＯＦＦ、各種センサ情報など）を送信すること、リモコンから来る運転情報（運転モード、設定温度など）を受信すること、リモコンに対して運転情報（各種センサデータ、異常内容など）を送信すること、集中コントローラから来る運転情報（運転モード、設定温度など）を受信すること、集中コントローラに対して運転情報（各種センサデータ、異常内容など）を送信することなどを行うものである。

【０００９】室内機、室外機、リモコン、集中コントローラにそれぞれ設けられてその伝送を制御する同一の制御機構は、伝送機構が受信した伝送情報が当該機器による処理もしくは中継を要するものかそうでないかを判断し、処理もしくは中継を要するならば処理もしくは中継を行ない、処理もしくは中継を要しない場合はその情報を消去するものである。

【００１０】室内機、室外機それぞれに１個の制御機構とそれに制御される２個の伝送機構を設け、それぞれの伝送機構に伝送線とのコネクタを設けておけば、１個の伝送機構が機能しなくなった場合でも、伝送線のつなぎ変えだけで当該機器のダウンを避けることができ、また、室外機と室内機、室内機とリモコンが別々の伝送線で接続されている場合も室内機を経由した室外機とリモコン間のデータ伝送が容易に行える。

【００１１】さらに、各伝送機構の伝送線とのコネクタを、室内機、室外機、リモコン、集中コントローラで共通化することにより、通常は室内機に接続されているリモコンを室外機に接続して機能試験を行ったり、集中コントローラをユーザのこのみや機器配置の都合によって室内機につないだり、室外機につないだり、じゆうに行うことができる。

【００１２】

【実施例】以下、本発明の実施例を図面を参照して説明する。

【００１３】図１は本発明に係る空調装置の第１の実施例のブロック構成図である。図示の装置は、集中コントローラ１と、該集中コントローラ１に集中制御用伝送線２で接続された室外機３ａと、該室外機３ａに接続された空調制御用伝送線４と、該空調制御用伝送線４にそれａ，５ｂ，５ｃ，５ｄ，……と、室内機５ａに接続されたリモコン用伝送線６と、該リモコン用伝送線６に接続されたリモコン７とを含んで構成され、室内機５ａ，５ｂ，５ｃ，５ｄ，……は、前記リモコン用伝送線６にも接続されている。

【００１４】なお、室外機は空気調和のための冷熱や温熱を生成して室内機に供給し、室内機から送りこまれた不要な熱を外部に放出する機能を備えたものであり、室内機は、空調対象の空間の空気と熱交換して該空気に室外機から供給された冷熱や温熱を供給するものである。室外機３ａと室内機５ａ、室外機３ｂと室内機５ｂ、室外機３ｃと室内機５ｃ、室外機３ｄと室内機５ｄは、それぞれ冷媒配管で接続され、各機器には電力源からの配線が接続されているが、ここでは、説明をデータ伝送に限り、それらの図示を省略してある。

【００１５】集中コントローラ１には、集中コントローラ制御機構８と、該集中コントローラ制御機構８に接続された伝送機構９が設けられており、前記集中制御用伝送線２は、伝送機構９に接続されている。集中コントローラ１には、このほかに、実際にデータを処理したり、データを生成する制御演算手段や表示手段、データ入力手段などからなる制御部が設けられており、それらの手段から出力されるデータが集中コントローラ制御機構８で選択整理されて送信先機器アドレス、自己の機器アドレスを付され所定のデータ構造を持つ伝送データとして伝送機構９に送られ、伝送機構９から前記集中制御用伝送線２に送出される。また、集中制御用伝送線２を流れる伝送データは伝送機構９によって受信されて取り込まれ、集中コントローラ制御機構８に送られる。集中コントローラ制御機構８は、入力されたデータが集中コントローラ１での処理を要するものかそうでないかを判断し、処理を要するならば前記制御演算手段や表示手段に送る処理を行ない、処理を要しない場合はその伝送データを消去する。

【００１６】室外機３ａには、前記集中制御用伝送線２に接続された第１の伝送機構９と、該第１の伝送機構９に接続された室外機制御機構１０と、該室外機制御機構１０に接続された第２の伝送機構９が設けられており、前記空調制御用伝送線４は該第２の伝送機構９に接続されている。第１，第２の伝送機構９は、前記集中コントローラ１に設けられている伝送機構９と同一構成のもので、以下に述べる室外機３ｂ，３ｃ，…，室内機５ａ，５ｂ，５ｃ，５ｄ，…，及びリモコン７の伝送機構９とも同一構成である。なお、各伝送機構９は、共通の空調制御用伝送線４、リモコン用伝送線６に伝送データを送出するための送信優先権の取得その他の機能を有するが、それらについての詳細は省略する。室外機には、このほかに、実際にデータを処理したり、データを生成する制御演算手段や表示手段、データ入力手段などからな

いるが、説明は省略する。

【0017】第1の伝送機構9は集中制御用伝送線2に流れる伝送データを受信し、室外機制御機構10に送りこむ。室外機制御機構10は入力されたデータが室外機3aで処理すべきデータか他の機器に中継すべきデータかを判断し、室外機3aで処理すべきデータであれば、そのデータを図示されていない処理演算手段や表示手段に送り、送られてきたデータの表示や送られてきたデータに基づく室外機の制御を行う。入力されたデータが他の室外機や室内機，リモコンに中継するべきデータであれば第2の伝送機構9に送り出す。室外機3aで処理すべきデータでありかつ他の室外機や室内機，リモコンのいずれかに中継するべきデータであれば、入力されたデータを前記図示されていない処理演算手段や表示手段に送ると同時に、第2の伝送機構9に送る。

【0018】室外機制御機構10はまた、室外機3aで生成されたデータや運転情報を、送信先機器アドレス、自己の機器アドレス及び前記生成されたデータや運転情報を含む所定のデータ構造の伝送データに構成し、第1、第2の伝送機構9に伝達する。第1の伝送機構9は室外機制御機構10から送りこまれた伝送データを集中制御用伝送線2に送出し、第2の伝送機構9は室外機制御機構10から送りこまれた伝送データを空調制御用伝送線4に送出する。

【0019】室外機3aの第2の伝送機構9はまた、空調制御用伝送線4に流れる伝送データを受信し、室外機制御機構10に伝達する。室外機制御機構10は、前記第1の伝送機構9から入力されたデータと同様に、伝達されたデータが室外機3aで処理すべきデータかどうか、他の機器に伝達すべきデータかどうか、を判断し、他の機器に中継すべきデータであれば第1の伝送機構9に送りだし、室外機3aで処理すべきデータであれば、前述のように、図示されていない処理演算手段や表示手段に送り、送られてきたデータの表示や送られてきたデータに基づく室外機の制御を行う。伝達されたデータが室外機3aで処理すべきデータではなく、他の機器に伝達すべきデータでもない場合、室外機制御機構10はその伝送データを消去する。室外機制御機構10から伝送データを送りこまれた第1の伝送機構9は、その伝送データを集中制御用伝送線2に送り出す。すなわち、第1、第2の伝送機構は、伝送線から伝送データを受信して室外機制御機構10に送るとともに、室外機制御機構10から送りこまれた伝送データを伝送線に送出するように構成されている。

【0020】室外機3b，3c，…は、いずれも室外機3aと同一の構成であるが、第1の伝送機構9の接続用のコネクタは、集中制御用伝送線2には接続されておらず、第2の伝送機構9が空調制御用伝送線4に接続され、空調制御用伝送線4を流れ

外機制御機構10は送りこまれたデータが当該室外機で処理すべきデータかどうか、他の機器に伝達すべきデータかどうか、を判断し、他の機器に伝達すべきデータであれば第1の伝送機構9に送りだし、当該室外機で処理すべきデータであれば、前述のように、図示されていない処理演算手段や表示手段に送り、送られてきたデータの表示や送られてきたデータに基づく当該室外機の制御を行う。伝送データが第1の伝送機構9に送られた場合、第1の伝送機構9は、伝送線に接続されていないので、室外機制御機構10から伝達された伝送データはここで消滅する。伝達されたデータが当該室外機で処理すべきデータではなく、他の機器に伝達すべきデータでもない場合、室外機制御機構10はその伝送データを消去する。また、各室外機で生成されたデータや運転情報は、室外機3aの場合と同様に、室外機制御機構10で所定のデータ構造の伝送データに構成されてから第1、第2の伝送機構に送られ、第2の伝送機構9から空調制御用伝送線4に送出される。

【0021】室内機5aは、第1の伝送機構9とこの第1の伝送機構9に接続された室内機制御機構11とこの室内機制御機構11に接続された第2の伝送機構9とを含んで構成され、第1の伝送機構9が前記空調制御用伝送線4に、第2の伝送機構9が前記リモコン用伝送線6に、それぞれ接続されている。第1の伝送機構9と第2の伝送機構9は同一のものである。第1の伝送機構9は空調制御用伝送線4に流れる伝送データを受信し、室内機制御機構11に送りこむ。室内機制御機構11は入力されたデータが室内機5aで処理すべきデータか他の機器に中継すべきデータかを判断し、室内機5aで処理すべきデータであれば、そのデータを図示されていない処理演算手段や表示手段に送り、送られてきたデータの表示や送られてきたデータに基づく室内機の制御を行う。室内機には、このほかに、実際にデータを処理したり、データを生成する制御演算手段や表示手段、データ入力手段などからなる制御部が設けられて機器の実際の制御を行っているが、説明は省略する。

【0022】室内機制御機構11は、第1の伝送機構9から入力されたデータがリモコン7に送るべきデータであれば、その伝送データをそのまま受信側の伝送機構と反対側の第2の伝送機構9に送り出す。また、室内機5aで処理すべきデータでありかつリモコン7に送るべきデータであれば、前記図示されていない処理演算手段や表示手段に送ると同時に、第2の伝送機構9に送る。伝達されたデータが室内機5aで処理すべきデータではなく、他の機器に伝達すべきデータでもない場合、室内機制御機構11はその伝送データを消去する。室内機制御機構11はまた、室内機5aで生成されたデータや運転情報を、送信先機器アドレス、自己の機器アドレス及び送信しようとするデータを含む所定のデータ構造の伝送

第1の伝送機構9は室内機制御機構11から送りこまれた伝送データを空調制御用伝送線4に送出し、第2の伝送機構9は室内機制御機構11から送りこまれた伝送データをリモコン用伝送線6に送出する。

【0023】室内機5aの第2の伝送機構9はまた、リモコン用伝送線6に流れる伝送データを受信し、室内機制御機構11に伝達する。室内機制御機構11は、前記第1の伝送機構9から入力されたデータと同様に、伝達されたデータが室内機5aで処理すべきデータかどうか、他の機器に伝達すべきデータかどうか、を判断し、他の機器（この場合、室外機3a，3b，3cや集中コントローラ1）に伝達すべきデータであればそのまま受信側の伝送機構と反対側の第1の伝送機構9に送りだし、室外機5aで処理すべきデータであれば、前述のように、図示されていない処理演算手段や表示手段に送り、送られてきたデータの表示や送られてきたデータに基づく室内機の制御を行う。室内機制御機構11から伝送データを送りこまれた第1の伝送機構9は、その伝送データを空調制御用伝送線4に送り出す。すなわち、第1、第2の伝送機構は、伝送線から伝送データを受信して室内機制御機構11に送るとともに、室内機制御機構11から送りこまれた伝送データを伝送線に送出するように構成されている。伝達されたデータが室内機5aで処理すべきデータではなく、他の機器に伝達すべきデータでもない場合、室内機制御機構11はその伝送データを消去する。

【0024】室内機5b，5c，…は、いずれも室内機5aと同一の構成であるが、他の機器に中継すべき機器が設定されていない。したがってそれらの室内機制御機構11は、受信した伝送データが自己宛のものでなかった場合、その伝送データを消去する。但し、受信した伝送データが自己及び他の機器宛のものであった場合、受信したデータに基づく当該機器での演算処理、制御等は行われる。また、各室内機で生成されたデータや運転情報は、室内機5aの場合と同様に、室内機制御機構11で、送信先機器アドレス、自己の機器アドレス及び送信しようとするデータを含む所定のデータ構造の伝送データに構成されてから、第1，第2の伝送機構に送られ、第1の伝送機構9から空調制御用伝送線4に、第2の伝送機構9からリモコン用伝送線6に、それぞれ送出される。

【0025】リモコン7は、リモコン用伝送線6に接続された第1の伝送機構9と、この第1の伝送機構9に接続されたリモコン制御機構12とを含んで構成されている。第1の伝送機構9は前記リモコン用伝送線6に流れる伝送データを受信してリモコン制御機構12に伝送し、リモコン制御機構12は受信したデータが自己宛のものであれば、受信したデータの表示、格納等の処理を送信しようとするデータがある場合、送信先機器アドレス、自己の機器アドレス及び送信しようとするデータを所定のデータ構造の伝送データに構成し、第1の伝送機構9を介してリモコン用伝送線6に送出する。

【0026】集中制御用伝送線2、空調制御用伝送線4、及びリモコン用伝送線6に流れる伝送データはすべて共通のデータ構造を持ち、各伝送線はすべて同一仕様の電線である。したがって機器と伝送線を結合するコネクタは、各伝送線とも同一となっている。また、室内機、室外機とも、本体の互いに反対の面に、第1、第2の伝送機構に接続された伝送線用のコネクタが設けられている。さらに、室内機、室外機の各コネクタの近くには予備のコネクタ（図示せず）がそれぞれ設けてあり、別の伝送線を、空調制御用伝送線4及びリモコン用伝送線6に接続できるようになっている。

【0027】次に動作について説明する。

【0028】図6は各機器の制御機構の受信手順を示すフローチャートであり、図7は送信手順を示すフローチャートである。伝送データは、図8に示されるように、送信元機器アドレスが先頭に、次に送信先機器アドレスが配置され、最後に伝達すべきデータが続く。各機器の制御機構は、伝達された伝送データの送信先機器アドレスに自己の機器アドレスが含まれているかかどうかを調べ（手順61）、自己の機器アドレスが含まれていれば手順62に進んで伝送されたデータに基づく運転処理（運転／停止、風量制御など）を行う。自己の機器アドレスが含まれていなければ手順63で中継要かを判断し、中継要と判断されると、手順64に進んで受信側と反対側の伝送機構に、受信した伝送データをそのまま送りだし、その伝送機構が接続された伝送線に送信する。手順63で中継不要と判断されると、手順65に進んで伝送データを消去し処理を終了する。

【0029】室外機3aの室外機制御機構10には、すべての機器のアドレス（もちろん自己の機器アドレスを除いて）が中継対象として設定されており、第1の伝送機構9から伝達された伝送データの送信先機器アドレスが自己の機器アドレスでない場合、伝達された伝送データを第2の伝送機構9に送りだし、第2の伝送機構9から伝達された伝送データの送信先機器アドレスが自己の機器アドレスでない場合、伝達された伝送データを第1の伝送機構9に送りだす。室内機5aの室内機制御機構11には、室内機以外の機器のアドレスが中継対象の機器アドレスとして設定されており、第1の伝送機構9から伝達された伝送データの送信先機器アドレスが室内機以外のアドレスの場合、伝達された伝送データを第2の伝送機構9に送りだし、第2の伝送機構9から伝達された伝送データの送信先機器アドレスが室内機以外のアドレスの場合、伝達された伝送データを第1の伝送機構9

図8に示すような伝送データ構成で、図7のフローチャートに従い伝送データの送信処理を行う。制御機構は送信データを受け取ると（手順71）、送信先の機器アドレスと自己の機器アドレスをセットし（手順72）、送信しようとするデータと組み合わせて伝送データを生成して伝送機構に出力する（手順74）。伝送データを受け取った伝送機構は、伝送線に対する送信の権利を得た上で、伝送線に伝送データを送出する。伝送データを送出する前に、送信相手先の受信が可能かどうかを確かめるようにしてもよい。

【0031】このような手順と同一の伝送機構を有することにより、空調システムの構成が任意に構成できるようになる。図1～図5に示す空調システムは、同一の機器を異なるデータ伝送系列に接続した例であり、室内機5a、室外機3aの中継対象機器のアドレス設定を変えるだけでこのような系列の変更が自由になる。

【0032】動作の一例として、集中コントローラ1から室内機5aを運転した場合の動作を述べる。図1の空調システム構成の場合、集中コントローラ1の集中コントローラ制御機構8で作成された伝送データは伝送機構9から集中制御用伝送線2を介して室内機5aへ送信される。この時送信先機器アドレスは室内機5aのアドレスとなる。しかし、集中制御用伝送線2には室内機5aが存在しないため室外機3aは集中コントローラ1が集中制御用伝送線2に送りだした伝送データを第1の伝送機構9を介して受信し、制御機構11で送信先機器アドレスが自分に関係するものか、中継すべきものか判断する。送信先機器アドレスにセットされている室内機5aのアドレスは室外機3aの空調制御用伝送線4に接続されており、中継対象機器に設定されているため、室外機3aはこの受信信号を有効とし、受信した伝送データを第2の伝送機構9から空調制御用伝送線4へ送信する。室内機5aは空調制御用伝送線4から室外機3aより送信された伝送データを受信し、伝送データにセットされたアドレスから送信元が集中コントローラ1で自分に対する信号と判断し、伝送データに含まれたデータに基づいて運転を行う。

【0033】空調制御用伝送線4には、室外機3b，3c，……及び室内機5b，5c，5dが接続されていて、それぞれ室外機3aから送信された前記伝送データを受信するが、送信先機器アドレスが自分に関係したものでないので、受信した伝送データをそのまま消去する。

【0034】図2は本発明に係る空調システムの第2の実施例を示すブロック構成図である。このシステムは集中コントローラ1を集中制御用伝送線2で室外機3に接続し、室外機3、室内機5、リモコン7を空調制御用伝送線4で接続することで構成される。各機器の内部の構成は図1に示す実施例の場合と同じである。図2の空調システムの場合は、室外機3aの室外機制御機構10も他の室外機の制御機構と同様、受信した伝送データの送信先機器アドレスが自分に関係しないときはその伝送データを消去すること以外は、図1と同様な動作となる。

【0035】図3は本発明に係る空調システムの第3の実施例を示すブロック構成図である。このシステムは集中コントローラ1、室外機3、室内機5を空調制御用伝送線4で接続し、リモコン7をリモコン用伝送線6で室内機5に接続することで構成される。各機器の内部の構成は図1に示す実施例の場合と同じである。図3の空調システムの場合は、室外機3aの室外機制御機構10も他の室外機の制御機構と同様、受信した伝送データの送信先機器アドレスが自分に関係しないときはその伝送データを消去すること以外は、図1と同様な動作となる。集中コントローラ1の制御機構8で作成された室内機5aを操作するための伝送データは、送信先機器アドレスに室内機5aのアドレスがセットされて伝送機構9から空調制御用伝送線4に送り出される。この場合は、図1、2の場合と異なり、集中コントローラ1から送信された伝送データの送信先機器アドレスの室内機5aが空調制御用伝送線4上に存在するため、室内機5aが直接この伝送データを受信する。室内機5aは、受信した伝送データの送信先機器アドレスからこの伝送データを有効として、このデータに基づいて運転を行なう。

【0036】図4は本発明に係る空調システムの第4の実施例を示す空調システムブロック構成図である。このシステムは室外機3を空調制御用伝送線4で室内機5に接続し、集中コントローラ1、リモコン7、室内機5をリモコン用伝送線6で接続することで構成される。各機器の内部の構成は図1に示す実施例の場合と同じである。図4の空調システム構成の場合も、各機器の動作は前記図3に記載されたシステムの場合と同様である。集中コントローラ1の制御機構8で作成された室内機5aを操作するための伝送データは、送信先機器アドレスに室内機5aのアドレスがセットされて伝送機構9からリモコン用伝送線6に送出される。この場合も図3に示すシステムの場合と同様に、集中コントローラ1から送信された信号の送信先機器アドレスの室内機5aがリモコン用伝送線6上に存在するため、室内機5aが直接この伝送データを受信する。室内機5aは、受信した伝送データの送信先機器アドレスによりこの伝送データを有効として、このデータに基づいて運転を行なう。

【0037】図5は本発明に係る空調システムの第5の実施例を示す空調システムブロック構成図である。このシステムは集中コントローラ1、室外機3、室内機5、リモコン7を空調制御用伝送線4で接続することで構成される。各機器の内部の構成は図1に示す実施例の場合と同じである。図5の空調システムの場合は、室外機3aの室外機制御機構10も他の室外機の制御機構と同

関係しないときはその伝送データを消去すること以外は、図２と同様な動作となる。つまり、本実施例の構成の場合、各機器の制御機構は、いずれも同一の動作、つまり、伝送されてきた伝送データの送信先機器アドレスが自己の機器アドレスであれば当該伝送データに基づく処理を行うが、そうでない場合は伝送データを消去し、中継動作も行わない。

【００３８】図１，２における室外機３ａの室外機制御機構１０、図１，３，４における室内機制御機構１１は、ハードウェアとしては他の機器の制御機構と同一であるが、搭載されるソフトウェアが特定の送信先機器アドレスを持つ伝送データに対して中継動作を行うように設定されている点が他の機器の制御機構に搭載されるソフトウェアと異なっている。しかし、図５における各機器の制御機構に搭載されるソフトウェアは、それぞれ自己の機器アドレスが異なる以外は、すべて同一であり、必要に応じて中継すべき機器アドレスの設定が可能である。

【００３９】上述した図１乃至図５に示すように、各機器に同一の伝送機構９を有することにより、機器間の伝送線の接続の自由度が大きく、異なる接続システムの構築が容易である。例えば、室外機３ａの第１の伝送機構が機能しなくなった場合、集中制御用伝送線２を室外機３ａから外して室外機３ｂの第１の伝送機構９側に接続し、室外機３ｂの室外機制御機構１０に中継対象機器のアドレスを設定すればよい。また、室内機５ａの第１の伝送機構９が機能しなくなった場合は、例えば室内機５ｂの制御機構１１に、室内機５ａの制御機構１１に設定されている中継対象機器のアドレスを設定するだけで、各機器間のデータ伝送は支障なく継続できる。さらに、各機器の伝送線のコネクタが統一され、機器のどの伝送線コネクタにつないでも同じ機能の伝送機構に接続されるから、伝送線の配線作業が容易になり、誤配線が避けられる。

【００４０】

【発明の効果】室内機と室外機及び室内機とリモコン及び室外機又は室内機と集中コントローラ間の伝送方式が標準化でき、今まで別々に作成していた制御が一つですみ、開発が省力化できる。また、例えば機器の故障で室内機とリモコンの伝送ラインが使用不可となった場合でも、その線を室内機と室外機につなぎ換えることにより復旧でき、サービス性が向上する。また、伝送線の接続できる箇所が多いため施工性や伝送線配置の自由度が向上する。また、通常機器の状態の点検を行なうリモコンを各室外機に取付けられるようになり、保守性も向上する。

【図面の簡単な説明】

【図１】本発明の第１の実施例に係る空調システムのブロック構成図である。

【図２】本発明の第２の実施例に係る空調システムのブロック構成図である。

【図３】本発明の第３の実施例に係る空調システムのブロック構成図である。

【図４】本発明の第４の実施例に係る空調システムのブロック構成図である。

【図５】本発明の第５の実施例に係る空調システムのブロック構成図である。

【図６】本発明の機器の受信フローチャートの例である。

【図７】本発明の機器の送信フローチャートの例である。

【図８】本発明の機器に適用される伝送データ構成の例である。

【符号の説明】

１　集中コントローラ　２　集中制御用伝送線

３ａ，３ｂ，３ｃ　室外機　４　空調制御用伝送線

５ａ，５ｂ，５ｃ，５ｄ　室内機　６　リモコン用伝送線

７　リモコン　８　集中コントローラ制御機構

９　伝送機構　１０　室外機制御機構

１１　室内機制御機構　１２　リモコン制御機構

【図５】

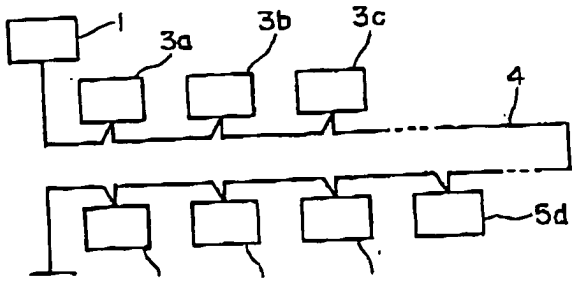

【図８】

送信元機器アドレス	送信先機器アドレス	データ

【図1】

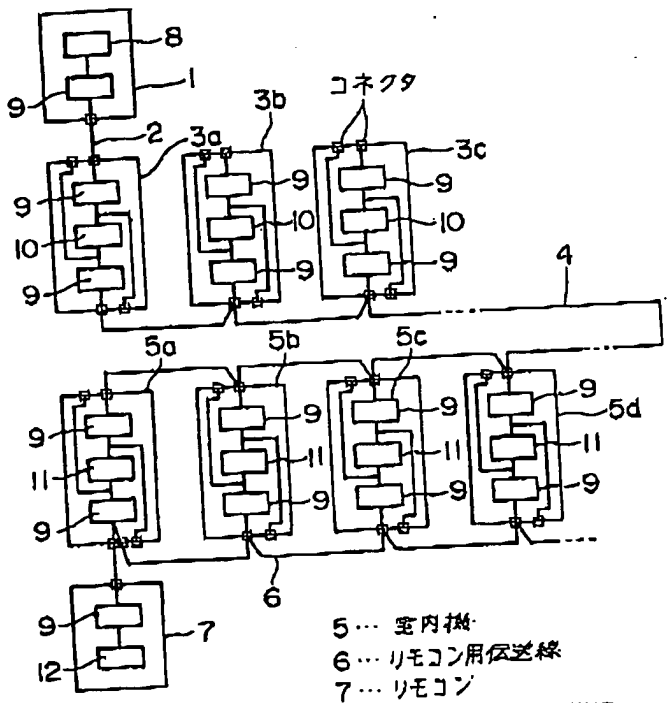

1…集中コントローラ
2…集中制御用伝送線
3…室外機
4…空調制御用伝送線
5…室内機
6…リモコン用伝送線
7…リモコン
8…集中コントローラ制御機構
9…伝送機構
10…室外機制御機構
11…室内機制御機構
12…リモコン制御機構

【図2】

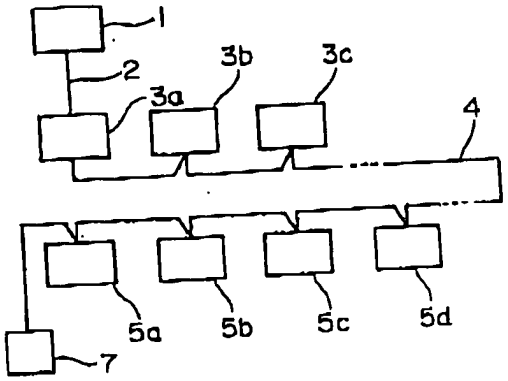

【図3】

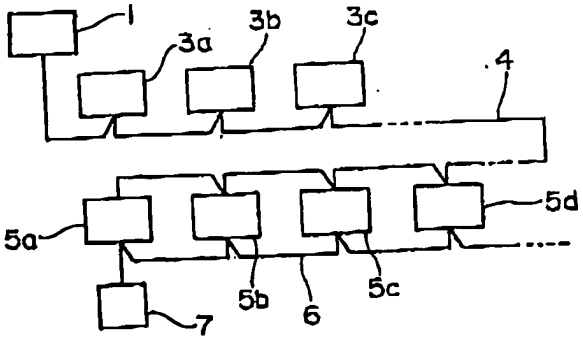

【図4】

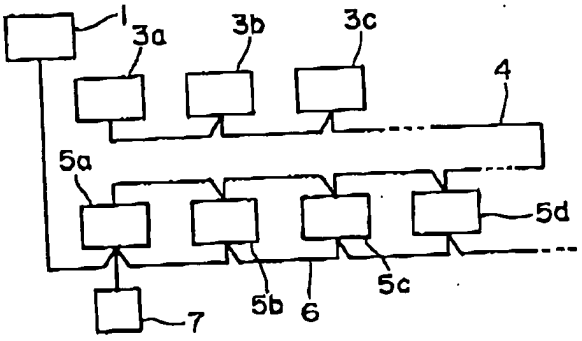

【図6】

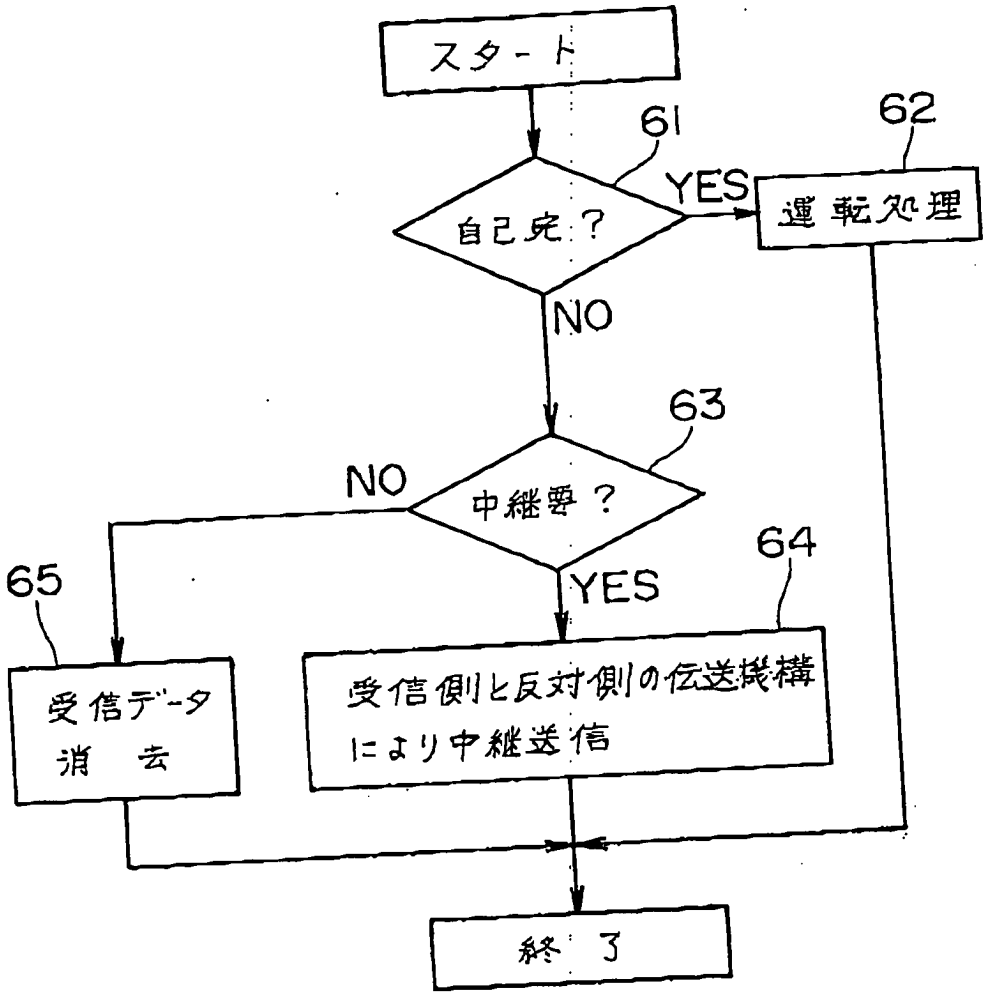
スタート
61
自己宛？
YES
62
運転処理
NO
63
中継要？
NO
YES
64
65
受信データ
消去
受信側と反対側の伝送機構
により中継送信
終了

PATENT ABSTRACTS OF JAPAN

(11)Publication number : 2004-096460
(43)Date of publication of application : 25.03.2004

(51)Int.Cl. H04L 12/44
H04L 12/28
H04L 12/46
H04L 12/56

(21)Application number : 2002-255416
(22)Date of filing : 30.08.2002

(71)Applicant : FUJITSU LTD
(72)Inventor : TAJIMA KAZUYUKI
NISHIMURA KAZUTO

(54) ETHERNET SWITCH

(57)Abstract:
PROBLEM TO BE SOLVED: To execute a duplex switching operation of a port with less effects to the network and at a high speed when a fault of a transmission line occurs in an ethernet switch in which transfer of packets among a plurality of ports is executed by connecting to an ethernet (R) network.
SOLUTION: In the Ethernet switch, the transfer of the packets among a plurality of the ports is executed by connecting to the ethernet network. The Ethernet switch is provided with a switching control means to execute setting of an operating mode of either an active system or a standby system to each port, a transfer information storage means by which identification information of the active system port as a transfer destination can be retrieved from a destination address of the packet received by the active system port, and a means of acquiring identification information of a standby system port paired with the active system port as a transfer destination from the identification information of the active system port as a transfer destination. Further, it is so constituted that the packet received by the standby system port is disposed by transferring the packet received by the active system port to the active system port as its transfer destination and the standby system port paired with the active system port as the transfer destination. As a result, switching of the ports can be quickly executed by operations of the Ethernet(R) switch on the reception side.

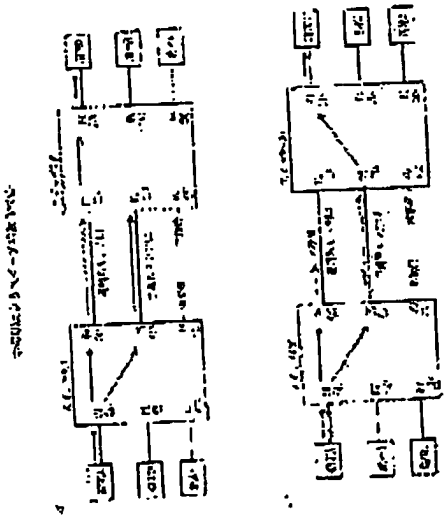

Partial English Translation
of
Japanese Laid-Open Patent Publication No. 2004-96460

[Claim 1]

An Ethernet switch connected to Ethernet network for carrying out packet transfer among a plurality of ports, comprising:

switching control means for setting an operation mode of each port to either an active mode or a standby mode;

transfer information storage means capable of retrieving identification information of an active mode port as a transfer destination from a destination address of a packet received by an active mode port; and

means for acquiring identification information of a standby mode port which is paired with the active mode port as the transfer destination from the identification information of the active mode port as the transfer destination,

wherein the packet received by the active mode port is transferred to the active mode port as the transfer destination and the standby mode port which is paired with the active mode port as the transfer destination, and the packet received by the standby mode port is discarded.

(19)日本国特許庁(JP)

(12)公開特許公報(A)

(11)特許出願公開番号
特開2004-96460
(P2004-96460A)

(43)公開日 平成16年3月25日(2004.3.25)

(51)Int.Cl.[7]	F I		テーマコード(参考)
H04L 12/44	H04L 12/44	300	5K030
H04L 12/28	H04L 12/28	200Z	5K033
H04L 12/46	H04L 12/46	Z	
H04L 12/56	H04L 12/56	100A	

審査請求 未請求 請求項の数 5 OL (全 27 頁)

(21)出願番号 特願2002-255416(P2002-255416)
(22)出願日 平成14年8月30日(2002.8.30)

(特許庁注：以下のものは登録商標)
イーサネット

(71)出願人 000005223
富士通株式会社
神奈川県川崎市中原区上小田中4丁目1番1号

(74)代理人 100072590
弁理士 井桁 貞一

(72)発明者 田島 一幸
神奈川県川崎市中原区上小田中4丁目1番1号 富士通株式会社内

(72)発明者 西村 和人
神奈川県川崎市中原区上小田中4丁目1番1号 富士通株式会社内

Fターム(参考) 5K030 GA12 HA08 KA05 KX23 LA19 LB08 LD04 MD02
5K033 AA05 CB15 EB02 EB06

(54)【発明の名称】イーサネットスイッチ

(57)【要約】
【課題】イーサネットネットワークに接続して、複数のポート間のパケットの転送を行うイーサネットスイッチにおいて、伝送路の故障発生時のポートの二重化切り替え動作を、ネットワークへの影響を少なく、かつ、高速に実行できるようにする。
【解決手段】イーサネットネットワークに接続して、複数のポート間のパケットの転送を行うイーサネットスイッチにおいて、各ポートに運用系または予備系いずれかの運用モードの設定を行う切替制御手段と、運用系ポートで受信したパケットの宛先アドレスから転送先となる運用系ポートの識別情報を検索できる転送情報記憶手段と、該転送先となる運用系ポートの識別情報から該転送先となる運用系ポートと対をなす予備系ポートの識別情報を獲得する手段を備え、該運用系ポートで受信したパケットをその転送先となる運用系ポートおよび該転送先となる運用系ポートと対をなす予備系ポートに転送し、該予備系ポートで受信したパケットを廃棄する、ように構成して、受信側のイーサネットスイッチの動作により迅速にポートの切り替えが行えるようにする。

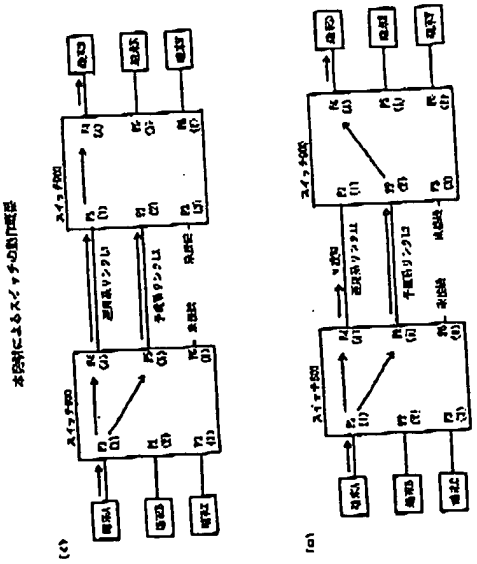

【特許請求の範囲】
【請求項１】
イーサネットネットワークに接続して、複数のポート間のパケットの転送を行うイーサネットスイッチにおいて、
各ポートに運用系または予備系いずれかの運用モードの設定を行う切替制御手段と、運用系ポートで受信したパケットの宛先アドレスから転送先となる運用系ポートの識別情報を検索できる転送情報記憶手段と、該転送先となる運用系ポートの識別情報から該転送先となる運用系ポートと対をなす予備系ポートの識別情報を獲得する手段を備え、該運用系ポートで受信したパケットをその転送先となる運用系ポートおよび該転送先となる運用系ポートと対をなす予備系ポートに転送し、該予備系ポートで受信したパケットを廃棄することを特徴とするイーサネットスイッチ。
【請求項２】
請求項１に記載のイーサネットスイッチにおいて、
前記運用系ポートで受信したパケットを、前記運用系ポートと対をなす予備系ポートへ転送することを抑止することを特徴とするイーサネットスイッチ。
【請求項３】
請求項１に記載のイーサネットスイッチにおいて、
網構成制御のためのプロトコルパケットを受信時は、受信したポートが運用系のときは該プロトコルパケットをプロトコル処理手段に渡し、該ポートが予備系のときは該プロトコルパケットを廃棄することを特徴とするイーサネットスイッチ。
【請求項４】
請求項１に記載のイーサネットスイッチにおいて、
パケットを受信した第一の運用系ポートの識別情報と該パケットの送信元アドレスとから成る転送情報を第二の運用系ポートに送信する転送情報送信手段と、第二の運用系ポートの該転送情報送信手段により送信されてくる第二の運用系ポートの転送情報を受信する転送情報受信手段を備え、該転送情報受信手段により受信した転送情報に第二の運用系ポートと対をなす予備系ポートの識別情報を付加して前記転送情報記憶手段に格納し、受信したパケットの宛先アドレスから前記転送情報記憶手段を検索して転送先となる運用系および予備系ポートの識別情報を検索することを特徴とするイーサネットスイッチ。
【請求項５】
請求項１に記載のイーサネットスイッチにおいて、
該イーサネットスイッチのポートに対向接続されているイーサネットスイッチに対して、運用モードの設定変更を行った旨を通知する手段と、対向接続されているイーサネットスイッチからの運用モードの設定変更の通知を受信して前記切替制御手段に渡し、前記切替制御手段は該通知を受信したポートの運用モードを該通知の内容に従って設定変更することを特徴とするイーサネットスイッチ。

【発明の詳細な説明】
【０００１】
【発明の属する技術分野】
本発明はイーサネット技術により構成されるネットワークに接続して、複数のポート間のパケットの転送を行うイーサネットスイッチに係り、特に、リンク単位の故障切り替えを実現するイーサネットスイッチに関する。
なお、以降の記述において、単にスイッチと記述されている場合はイーサネットスイッチのことを意味している。
【０００２】

イーサネット技術を利用した広域ネットワーク（ＷＡＮ）が構築されるようになってきた。これに伴い、イーサネットで構築されるネットワークにも高信頼性が要求されるようになってきている。すなわち、故障が発生した場合でも、すみやかに故障を回避して通信を継続できるようにする必要がある。このため、高速でかつネットワークへの影響範囲を極力小さくして障害を回避できる技術が望まれている。

【０００３】

【従来の技術】

従来のイーサネット技術で障害を回避する技術としては、Ｒａｐｉｄ Ｓｐａｎｎｉｎｇ Ｔｒｅｅ Ｐｒｏｔｏｃｏｌ（ＲＳＴＰ）とＬｉｎｋ Ａｇｇｒｅｇａｔｉｏｎ（ＬＡ）がある。

ＲＳＴＰについては、２００１年3月２６日発行のＩＥＥＥ Ｄｒａｆｔ Ｐ８０２．１ｗ／Ｄ１０の"Ｉｎｆｏｒｍａｔｉｏｎ ｔｅｃｈｎｏｌｏｇｙ － Ｔｅｌｅｃｏｍｍｕｎｉｃａｔｉｏｎｓ ａｎｄ ｉｎｆｏｒｍａｔｉｏｎ ｅｘｃｈａｎｇｅ ｂｅｔｗｅｅｎ ｓｙｓｔｅｍｓ －Ｌｏｃａｌ ａｎｄ ｍｅｔｒｏｐｏｌｉｔａｎ ａｒｅａ ｎｅｔｗｏｒｋｓ － Ｃｏｍｍｏｎ ｓｐｅｃｉｆｉｃａｔｉｏｎｓ－Ｐａｒｔ ３： Ｍｅｄｉａ Ａｃｃｅｓｓ Ｃｏｎｔｒｏｌ （ＭＡＣ） Ｂｒｉｄｇｅｓ： Ａｍｅｎｄｍｅｎｔ ２ － Ｒａｐｉｄ Ｒｅｃｏｎｆｉｇｕｒａｔｉｏｎ"、に掲載されている。

【０００４】

また、ＬＡについては、ＩＥＥＥ Ｓｔｄ ８０２．３， ２０００ Ｅｄｉｔｉｏｎの"Ｉｎｆｏｒｍａｔｉｏｎ ｔｅｃｈｎｏｌｏｇｙ － Ｔｅｌｅｃｏｍｍｕｎｉｃａｔｉｏｎｓ ａｎｄｉｎｆｏｒｍａｔｉｏｎ ｅｘｃｈａｎｇｅ ｂｅｔｗｅｅｎ ｓｙｓｔｅｍｓ －Ｌｏｃａｌ ａｎｄ ｍｅｔｒｏｐｏｌｉｔａｎ ａｒｅａ ｎｅｔｗｏｒｋｓ － Ｓｐｅｃｉｆｉｃ ｒｅｑｕｉｒｅｍｅｎｔｓ －Ｐａｒｔ ３： Ｃａｒｒｉｅｒ ｓｅｎｓｅ ｍｕｌｔｉｐｌｅ ａｃｃｅｓｓ ｗｉｔｈ ｃｏｌｌｉｓｉｏｎ ｄｅｔｅｃｔｉｏｎ （ＣＳＭＡ／ＣＤ） ａｃｃｅｓｓ ｍｅｔｈｏｄ ａｎｄ ｐｈｙｓｉｃａｌ ｌａｙｅｒ ｓｐｅｃｉｆｉｃａｔｉｏｎｓ"、に掲載されている。

【０００５】

ＲＳＴＰはＳｐａｎｎｉｎｇ Ｔｒｅｅ Ｐｒｏｔｏｃｏｌ（ＳＴＰ）を改良したもので、通常のＳＴＰではルートブリッジ（Ｒｏｏｔ Ｂｒｉｄｇｅ）への経路をただ一つだけ選ぶが、ＲＳＴＰではルートブリッジへの経路を一番優れているものと二番目に優れているものの二つを選ぶ。一番優れている経路のルートブリッジへのポートをＲｏｏｔ Ｐｏｒｔ（ＲＰ）、二番目に優れている経路のルートブリッジへのポートをＡｌｔｅｒｎａｔｅ Ｐｏｒｔ（ＡＰ）とする。通常はＲＰのみを使用するが、ＲＰが利用できなくなると、ＡＰを利用して転送を行う。

【０００６】

ＬＡは、本来二つのイーサネットスイッチ間にあるリンクの帯域を増強する目的で使用されるもので、二つのイーサネットスイッチ間に複数の物理リンクを設定し、それらを一つの論理リンクとして扱うことができるものである。この二つのスイッチ間を転送されるパケットは、複数ある物理リンクのいずれか一本を、経由するように振り分けられる。振り分けの方法は任意に選択することができる。そこで、ある物理リンクに故障が発生したら、振り分けのアルゴリズムを変えて、障害が発生した物理リンクにはパケットを振り分けないように振り分けアルゴリズムを変更することで、その物理リンクの障害を回避するこ

明する。
図２５では、スイッチ８００および９００が運用系と予備系の二重化構成のリンクＬ１および Ｌ２で接続されており、スイッチ８００およびスイッチ９００には、それぞれ６個のポートが実装され、各ポートはスイッチ内の相対的なポート識別記号であるＰ１～Ｐ６で表わされている。

【０００８】
いま、端末Ａから端末Ｄへパケットを送信する場合を想定する。
通常時は、図２５（イ）に示すように、端末Ａから送出されたパケットはスイッチ８００のポートＰ１で受信され、スイッチ８００に実装されている振り分けアルゴリズムによって、ポートＰ４がパケットの転送先ポートとして選択され、ポートＰ４から接続先であるスイッチ９００に送出される。

【０００９】
スイッチ８００のポートＰ４から送信されたパケットは、スイッチ９００のポートＰ１で受信される。スイッチ９００は、運用系となるポートＰ１から受信したパケットも、予備系となるポートＰ２から受信したパケットも下流に転送するように動作するが、この場合には、スイッチ８００がスイッチ９００のポートＰ１のみにパケットを流してくるので、スイッチ９００がパケットを受信するのはポートＰ１のみである。このようにして、通常時は、スイッチ８００のポートＰ４とスイッチ９００のポートＰ１を接続する運用系リンクＬ１を経由して、矢印に沿ってパケットが送信されていき、スイッチ９００のポートＰ４から送出されて端末Ｄに到達する。

【００１０】
ここで、図２５（ロ）に示すように、運用系リンクＬ１で故障が発生し利用できなくなったとする。故障は下流側にあるスイッチ９００が検出するので、その旨の情報を予備系リンクＬ２経由でスイッチ８００に通知する。スイッチ８００では、振り分けアルゴリズムを変更し、パケットが予備系リンクＬ２に接続されているポートＰ５に転送されるようにする。スイッチ９００では、ポートＰ１からのパケットもポートＰ２からのパケットも下流に転送するように動作するので、スイッチ８００のポートＰ５からスイッチ９００のポートＰ２に送信されたパケットを受信すると、それをポートＰ４経由で端末Ｄに送信し、障害回避を完了する。

【００１１】
以上、ＬＡを用いた場合を説明したが、ＲＳＴＰを用いた場合でも、パケットを送信する側のスイッチで経路を一つ選択して、その経路にのみパケットを送信する点は、上記図２５の説明と同じであり、伝送路に障害が発生した際の回避方法も同様である。
以上のように、図２５の従来技術の障害回避方法では、パケットの送信側となるスイッチ８００での転送先ポートは一つに限定されており、伝送路から受信したパケット内の宛先アドレスを抽出し、その宛先アドレスによって、宛先アドレスと転送先ポート識別情報の対応表を記憶している転送情報テーブルを検索することにより、転送先ポートを決定するように構成している。このため、伝送路の障害等で運用系リンクＬ１から予備系リンクＬ２にパケットの送出先を切り替えるときは、転送情報テーブルの書き換えが必要となる。

【００１２】
従来技術によるスイッチの構成は図２４に示すように、各ポート毎に設けられる受信処理部と送信処理部、およびスイッチ部５００、およびプロトコル処理部４００から構成される。図２４では便宜上ポートＰ１とポートＰ２の２ポートの構成に簡略化して表わしているが、２ポートに限定されるものではない。
ここで、障害回避処理については、主に図２４の構成で示す各ポートに設けられる受信処理部が関わっており、その構成例を図２３に示す。

【００１３】
[illegible] ／Ｅｌｅｃｔｒｉｃａｌ）と復号部に

０ＢＡＳＥ－Ｘ（１ギガのイーサネット）では、８Ｂ／１０Ｂと呼ばれる符号化が行われており、この符号化された信号を復号する。

【００１４】

次に、転送情報抽出部３では、パケットのヘッダに付加されている宛先アドレスを取り出し、その宛先アドレスは転送先ポート決定部６へ、パケット本体は転送複製情報付加部４にあるＦＩＦＯ（Ｆｉｒｓｔ　Ｉｎ　Ｆｉｒｓｔ　Ｏｕｔ）キューであるＦＩＦＯ　５４に入れて、デコード部６０から、スイッチ部５００が認識できる形式のパケット転送先ポート情報であるタグが渡されるまで待ち合わせる。

【００１５】

一方、転送情報抽出部３から宛先アドレスを受け取った転送先ポート決定部６は、転送情報テーブル５を構成するＣＡＭ（Ｃｏｎｔｅｎｔ　Ａｄｄｒｅｓｓａｂｌｅ　Ｍｅｍｏｒｙ）５６を検索して、該パケットを出力する出力ポートの識別情報となる出力ポート番号を取得し、この取得した出力ポート番号を転送複製情報付加部４のデコード部６０に引き渡し、デコード部６０は該出力ポート番号をスイッチ部５００が利用できる形のタグ値にデコードし、タグ付加部５５に渡す。タグ付加部５５は、ＦＩＦＯに待たせてあったパケットを読み出し、該パケットにデコード部６０から引き渡されたタグ値を付加して、スイッチ部５００に引き渡す。ここで、タグ値としては一般的には、ビットマップ形式の値を用いる場合が多い。

【００１６】

また、転送情報テーブル５は、受信したパケットの宛先アドレスと転送先ポートの識別情報との対応関係を記憶するテーブルで、そのエントリは、受信したパケットの送信元アドレスと該パケットを受信したポートの識別情報をもとに自動的に登録されるようになっており、この機能を「学習機能」と呼んでいる。

【００１７】

【発明が解決しようとする課題】

上記ＲＳＴＰおよびＬＡを使用する障害回避技術では、いずれもループを防止するためにパケットを送信する側において経路を選択し、選択された経路にだけパケットを送信している。

しかし、一般に障害を検出するのはパケットを受信する側なので、障害を回避するためには、パケットを受信する側から送信する側へ通知する手段が必要であった。また、リンク切り替えの際に、パケットを送信するスイッチ内部における転送先ポートの変更が必要となるため、一般には転送情報テーブルの書き換え等の煩雑な手順を必要としていた。このため、復旧には数秒から数分の時間を必要とする場合があり、ＷＡＮにおいて通信サービスに利用する場合においては許容できない時間である。また、ＳＴＰを利用すると、ネットワーク全体が論理トポロジーを再構築するために、一時的にデータの転送を止めてしまうという問題があった。

【００１８】

本発明は、接続されているイーサネットネットワークへの影響を最小限にし、効率的かつ高速に障害を回避するイーサネットスイッチ装置を提供することを目的とする。

【００１９】

【課題を解決するための手段】

第一の発明では、イーサネットネットワークに接続して、複数のポート間のパケットの転送を行うイーサネットスイッチにおいて、各ポートに運用系または予備系いずれかの運用モードの設定を行う切替制御手段と、運用系ポートで受信したパケットの宛先アドレスから転送先となる運用系ポートの識別情報を検索できる転送情報記憶手段と、該転送先となる運用系ポートの識別情報から該転送先となる運用系ポートと対をなす予備系ポートの識別情報を獲得する手段を備え、該運用系ポートで受信したパケットをその転送先となる運用系ポートおよび該転送先となる運用系ポートと対をなす予備系ポートに転送し、該予備系ポートで受信したパケットを廃棄する、ように構成している。

第一の発明によれば、運用系ポートと予備系ポートの両方にパケットを送信できるようになり、受信側では運用系ポートから受信したパケットだけを転送することができるようになり、従来の技術ではできなかったリンクの受信側だけの処理で切り替えを実現することができ、切り替え手順を大幅に簡略化するとともに、切り替えに必要な時間を短縮することが可能となる。

【００２１】

第二の発明では、前記第一の発明において、前記運用系ポートで受信したパケットを、前記運用系ポートと対をなす予備系ポートへ転送することを抑止する、ように構成している。

第二の発明によれば、ブロードキャスト通信情報に、予備系ポートへのパケット転送を阻止することができ、ブロードキャスト転送を許容することが可能となる。

【００２２】

第三の発明では、前記第一の発明において、網構成制御のためのプロトコルパケットを受信時は、受信したポートが運用系のときは該プロトコルパケットをプロトコル処理手段に渡し、該ポートが予備系のときは該プロトコルパケットを廃棄する、ように構成している。

第三の発明によれば、プロトコル処理部に常に運用系のポートで受信したプロトコルパケットのみを転送することができ、切り替えを意識しないプロトコル処理部を構成できるようになる。

【００２３】

第四の発明では、前記第一の発明において、パケットを受信した第一の運用系ポートの識別情報と該パケットの送信元アドレスとから成る転送情報を第二の運用系ポートに送信する転送情報送信手段と、第二の運用系ポートの該転送情報送信手段により送信されてくる第二の運用系ポートの転送情報を受信する転送情報受信手段を備え、該転送情報受信手段により受信した転送情報に第二の運用系ポートと対をなす予備系ポートの識別情報を付加して前記転送情報記憶手段に格納し、受信したパケットの宛先アドレスから前記転送情報記憶手段を検索して転送先となる運用系および予備系ポートの識別情報を検索する、ように構成している。

【００２４】

第四の発明によれば、受信したパケットの転送時に、前記転送先情報記憶手段から転送先の運用系と予備系のポート識別情報を一度に獲得でき、転送時の手順の簡略化および処理時間の短縮を実現できるようになる。

第五の発明では、前記第一の発明において、前記イーサネットスイッチのポートに対向接続されているイーサネットスイッチに対して、運用モードの設定変更を行った旨を通知する手段と、対向接続されているイーサネットスイッチからの運用モードの設定変更の通知を受信して前記切替制御手段に渡し、前記切替制御手段は該通知を受信したポートの運用モードを該通知の内容に従って設定変更する、ように構成している。

【００２５】

第五の発明によれば、切り替えが発生した場合、自動的に切替情報を生成し、また、その切替情報を検出して自動的に切り替えを実行することができ、一方向のリンクを切り替えるだけで自動的に逆方向のリンクも切り替えることが可能となり、一方向ずつ切り替えを設定する手間を削減することができる。

【００２６】

【発明の実施の形態】

図２は、本発明によるスイッチの構成で、従来技術のスイッチの構成要素であるスイッチ部５００、プロトコル処理部４００、ポートＰ１、Ｐ２に加え、障害回避のための切り替え制御を行う切替制御部３００が新たに設けられている。

図１（ハ）は通常時のパケットの流れを

図１の構成では、それぞれスイッチ内の相対的な識別記号Ｐ１～Ｐ６で表現される６個のポートを備えたスイッチ８００およびスイッチ９００が、二重化構成をとる運用系リンクＬ１および予備系リンクＬ２により接続されており、スイッチ８００には端末Ａ、Ｂ、Ｃが接続され、スイッチ９００には端末Ｄ，Ｅ，Ｆが接続されている。
いま、端末Ａから端末Ｄへパケットを送信する場合を考える。図１中の上半分の図において、端末Ａからのパケットはスイッチ８００のポートＰ１の受信処理部で受信される。受信したパケットを端末Ｄに送信するためには、該パケットをポートＰ４に転送すればよいが、ここではポートＰ４とポートＰ５が二重化構成をとっているため、該パケットをポートＰ４およびポートＰ５の両方に転送し、従って、運用系リンクＬ１および予備系リンクＬ２の両方のリンクに送出される。

【００２８】
スイッチ９００では、通常時は、ポートＰ１およびＰ２の両方でパケットを受信するが、そのうちの運用系リンクの接続されているポートＰ１から受信したパケットのみを使用して、ポートＰ４へ転送して端末Ｄに送出する。
ここで、運用系リンクＬ１の障害をスイッチ９００が検出したときは、図１（ロ）に示すように、スイッチ９００では転送対象とするパケットを、ポートＰ１にて受信したパケットから予備系リンクＬ２に接続されているポートＰ２にて受信したパケットに切り替え、ポートＰ２にて受信したパケットをポートＰ４に転送して、障害を回避するように構成している。

【００２９】
上記の障害回避のための切り替え処理は、図２のスイッチの構成の中で、主に各ポートの受信処理部と切替制御部３００により実行される。
図２ではポートＰ１とポートＰ２の２ポートのみ記述しているが、３ポート以上で構成される場合でも、各ポートの構成および動作は図２の場合と同様であり、各ポートの受信処理部は共通部である切替制御部３００、プロトコル処理部４００およびスイッチ部５００に接続され、各ポートの送信処理部は共通部であるスイッチ部５００に接続され、また、各ポートの受信処理部は他のポートの受信処理部と接続され、それぞれ通信を行うことができる。

【００３０】
以下の記述では、上記図１のスイッチの動作概要に示すパケットの流れを例にして、図２のスイッチの構成のポートＰ１の受信処理部１００を代表として、その構成方法別に図を用いて説明する。
（１）第１の構成と実施の形態
図２の構成における受信処理部の第１の構成を図３に示す。

【００３１】
ここで、図１において、端末Ａより端末Ｄ宛てのパケットをスイッチ８００のポートＰ１に送信するケースを考える。ポートＰ１の受信処理部では、図３の第１の構成に示すように、伝送路終端部１において、光伝送の場合は光から電気信号への変換や符号復号などの物理層の処理を行う。通常状態であれば、パケットは転送情報抽出部３において、転送処理に必要なパケットの宛先アドレスを抽出される。今の場合、パケットは端末Ｄ宛であるので、宛先アドレスとして端末ＤのＭＡＣ（Ｍｅｄｉａ　Ａｃｃｅｓｓ　Ｃｏｎｔｒｏｌ）アドレスが取り出される。抽出された宛先アドレスは、転送先ポート決定部６に引き渡される。

【００３２】
転送情報テーブル５には、受信したパケットの宛先アドレスと、該パケットを出力すべきポートの識別情報との対応表が記憶されており、　転送先ポート決定部６は、引き渡された宛先アドレスをもとに転送情報テーブル５を検索して、該パケットを出力すべきポートの識別情報を得る。
[illegible]パケットの転送先となる運用系ポートの識別情報と、それと切り替[illegible]

ル７を備えており、転送先ポート決定部６は、転送情報テーブル５をもとに得られた出力ポート識別情報をもとに切替ペアテーブル７を検索して、切り替えのペアとなっている予備系ポートの識別情報を得る。すなわち、図１の動作概要の例では、スイッチ８００のポートＰ４の識別情報であるポート番号”４”から、その予備系リンクであるポートＰ５の識別情報となるポート番号”５”を得る。

【００３３】

ここで、得られたポート番号”５”は、転送複製情報付加部４に引き渡され、該パケットがポート番号”４”および”５”が示すポートに転送されるように、スイッチ部５００が認識できる形のタグ値に変換し、それをパケットに付加して、スイッチ部５００へ引き渡す。

スイッチ部５００は、この引き渡されたタグ値に基づいてポートＰ４およびＰ５の送信処理部にパケットを転送することにより、該パケットは伝送路に送出される。

【００３４】

以上の手順で、図１の動作概要の例に示すように、スイッチ８００のポートＰ４から送信されたパケットは、運用系リンクＬ１を経由してスイッチ９００のポートＰ１で、スイッチ８００のポートＰ５から送信されたパケットは、予備系リンクＬ２を経由してスイッチ９００のポートＰ２で、それぞれ受信される。

スイッチ９００のポートＰ１の受信処理部の処理は、上記の如きスイッチ８００の処理と同様だが、スイッチ９００のポートＰ４は冗長構成をとっていないため、切替ペアテーブル７を検索した結果は予備系ポートなしとなる。従って、転送複製情報付加部４では、ポートＰ４のみにパケットが転送されるようにタグ値を付加する。

【００３５】

スイッチ９００のポートＰ２の受信処理部でも同様に処理されるが、ポートＰ２は予備系リンクに接続されているので、切替制御部３００から転送先ポート決定部６に対して予備系である旨の設定が行われる。これにより、転送先ポート決定部６では「転送先なし」と決定して、転送複製情報付加部４において該パケットは廃棄される。

【００３６】

以上の動作により、スイッチ９００ではポートＰ１で受信したパケットのみがポートＰ４から送信され端末Ｄに届けられる。

次に、ポートの運用モードを切り替える場合の動作を説明する。

切り替えは、図２の構成に示す切替制御部３００が図１スイッチ９００のポートＰ１の受信処理部の転送先ポート決定部６に予備系の設定をし、同じくスイッチ９００のポートＰ２の転送先ポート決定部６に運用系の設定を行うことで達成される。前記のとおり、運用系の設定が行われていれば通常の転送を行い、予備系の設定が行われていれば転送先ポート決定部は転送先なしと決定するため、これらの設定により、スイッチ９００のポートＰ１で受信したパケットは転送されなくなり、ポートＰ２で受信したパケットのみが転送されるようになり、切り替え動作は完了する。

【００３７】

上記の第１の構成の実施の形態を、図４に示す。

まず、伝送路終端部１は光信号を電気信号に変換するＯ／Ｅ変換部５１と、伝送路の特性に合わせて符号化された信号を復号するための復号部５２で構成され、物理層の終端処理を行う。

転送情報抽出部３は、宛先アドレス抽出部５３で構成され、パケットのヘッダに含まれている宛先アドレスを抽出し、抽出した宛先アドレスを転送先ポート決定部６の中のＣＡＭ制御部５７に渡す。

【００３８】

転送先ポート決定部６はＣＡＭ制御部５７、切替ペアテーブル制御部５８および運用予備
[illegible]ＣＡＭ制御部５７は宛先アドレス抽出部５３から受け取った宛先

制御部５８に渡す。

【００３９】

切替ペアテーブル制御部５８は、受け取った転送先ポート番号をキーとして切替ペアテーブル７を検索し、切替ペアのポート番号を獲得する。

切替ペアテーブル７は、一般的なＲＡＭ（Ｒａｎｄｏｍ　Ａｃｃｅｓｓ　Ｍｅｍｏｒｙ）を使用した切替ペアテーブルＲＡＭ６１で構成され、転送先ポート番号をテーブル先頭からの相対アドレスとして、対応するエントリに、該相対アドレスに対応する転送先ポート番号と切替ペアになっているポートの番号が格納されている構造になっている。本テーブルのエントリは、切替制御部３００において切替ペアの設定時に予め作成されたものが、コピーされる。

【００４０】

さて、切替ペアテーブル制御部５８は、切替ペアテーブル７から獲得した転送先ポート番号と、切替ペアポート番号を、運用予備切替部５９に渡す。

運用予備切替部５９は、運用モードを示す１ビットのレジスタを備えており、その値が”１”であれば運用系であり、渡された二つのポート番号はそのまま転送複製情報付加部４の中のデコード部６０に渡され、該レジスタの値が”０”であれば予備系であり、二つのポート番号は”０”となってデコード部６０に渡される。

【００４１】

転送複製情報付加部４は、デコード部６０、タグ付加部５５およびＦＩＦＯ　５４で構成される。デコード部６０では、転送先ポート決定部６の中の運用予備切替部５９から渡されたポート番号が”０”でなければ、スイッチ部５００でパケットが転送先ポートと切替ペアポートの両方に転送されるように、タグ値を生成し、運用予備切替部５９から渡されたポート番号が”０”であれば、転送なしを意味するタグを生成し、生成したタグをタグ付加部５５に渡す。ここで、タグの構成は、スイッチ部５００の構成に依存する。

【００４２】

一方、転送情報抽出部３の中の宛先アドレス抽出部５３で宛先アドレスを抽出した後のパケットは、転送複製情報付加部４の中のＦＩＦＯキューＦＩＦＯ　５４に渡されて待ち状態となり、転送先ポート決定部６での転送先が決定されて、デコーダ６０にポート番号が渡された時点で、タグ付加部５５により転送先を示すタグが付加されて、スイッチ部５００に渡される。ここで、「転送先なし」のタグ値を持つパケットは、スイッチ部５００には渡されないか、渡されてもスイッチ部５００で廃棄される。

【００４３】

以上のように、送信側スイッチ、つまり図１におけるスイッチ８００では切替ペアテーブル７を設定しておくことにより、運用系となる転送先ポートと予備系となる切替ペアポートの両方にパケットを送信することができ、受信側スイッチ、つまりスイッチ９００では、図４における運用予備切替部５９のレジスタを、切替制御部３００からの指示で運用系は”１”に、予備系は”０”に設定しておくことにより、運用系のパケットだけが流れるようにできる。

【００４４】

切り替え制御は、切替制御部３００により、この運用予備切替部５９のレジスタを予備系は”０”から”１”へ、運用系は”１”から”０”に変更することで実現できる。

（２）第２の構成と実施の形態

図２の構成におけるスイッチの受信処理部の第２の構成を図５に示す。

第２の構成は、前記第１の構成に警報検出部２を加えた構成である。

【００４５】

警報検出部２は、伝送路の光入力断や符号復号時の誤りを検出し、切替制御部３００に伝送路の故障を通知する手段を提供するもので、切替制御部３００では、現在の運用系リンクが故障でかつ現在の予備系リンクに故障がないという状態を検出したら、運用系ポートの受信処理部の転送先ポート決定部６に予備系移行の指示を通知し、予備系ポートの受信

【００４６】
以上の手順により、運用系リンクで故障を検出した場合の予備系への自動切替を、受信側スイッチだけの動作で迅速に行えるようになる。
第２の構成の実施の形態を図６に示す。
切り替えは、運用予備切替部５９の中にあるレジスタを切替制御部３００の指示で書き替えることにより行うが、本実施例では、ＯＲゲート６２とＲＳ－Ｆ／Ｆ　６３で構成される警報検出部２を追加し、切替制御部３００をＡＮＤゲート６４とＤ－Ｆ／Ｆ　６５で構成している。
【００４７】
伝送路終端部１のＯ／Ｅ変換部５１で検出される光入力断情報および符号の復号部　５２で検出される符号誤り情報などの故障情報をＯＲゲートでまとめ、ＲＳ－Ｆ／Ｆ　６３のＳ（セット端子）に入れる。これにより、故障が発生するとＲＳ－Ｆ／Ｆ　６３の出力は”１”になる。短時間の障害情報によって頻繁に切り替わるのを防ぐためにＲＳ－Ｆ／Ｆ　６３を使用し、ここでは図示していない装置制御部からリセットされるまで内容が変わらないようにしている。
【００４８】
図示されていないが、同じ警報検出部２は切替ペアとなるポートにも備えられる。ここでは説明のため、図６の実施例に示してある受信処理部が実装されているポートを図２の構成のポートＰ１とし、図６に示していないポートＰ１の予備系となる切替ペアポートを、図２の構成のポートＰ２として表示する。ＲＳ－Ｆ／Ｆ　６３の出力は、切替制御部３００の中にあるＡＮＤゲート６４に入る。このＡＮＤゲート６４は、ポートＰ１の受信処理部１００のＲＳ－Ｆ／Ｆ　６３の出力が”１”、すなわちポートＰ１が故障で、ポートＰ２のＲＳ－Ｆ／Ｆ　６３の出力が”０”、すなわちポートＰ２が正常なときには”１”を出力し、これがＤ－Ｆ／Ｆ　６５に入れられる。
【００４９】
Ｄ－Ｆ／Ｆ　６５の出力は、正転側がポートＰ１の運用予備切換部５９に、反転側がポートＰ２の運用予備切換部５９に入れられるため、Ｄ－Ｆ／Ｆ　６５の入力が”０”のときはポートＰ１が運用系となり、Ｄ－Ｆ／Ｆ　６５の入力が”１”のときはポートＰ２が運用系になる。
以上により、ポートＰ１が運用系として設定されている状態で、ポートＰ１で故障が検出され、かつそのときポートＰ２が故障していなければ、Ｄ－Ｆ／Ｆ　６５の出力が反転して切り替えが自動的に行われる。
（３）第３の構成と実施の形態
図２の構成におけるスイッチの受信処理部の第３の構成を図７に示す。
【００５０】
第３の構成は、前記第１の構成に、ＢＣ（Ｂｒｏａｄ　Ｃａｓｔ）制御部１３を加えた構成となっている。転送情報テーブル５は、受信したパケットの宛先アドレスと転送先ポートの識別情報との対応関係を記憶するテーブルで、そのエントリは学習機能により自動的に生成し登録されるが、学習する前や、エージングによるエントリ削除などにより、宛先アドレスに対応する転送先ポート識別情報を一意に決定できない場合が発生する。イーサネットではその場合は、転送可能な全てのポートにパケットをコピーして転送する。これを、ブロードキャストという。
【００５１】
例えば、図１の動作概要の例では、スイッチ９００のポートＰ１で受信したパケットを未接続のポートＰ３以外の全てのポートに転送すると、予備系となるポートＰ２にも転送されてしまい、スイッチ９００のポートＰ２に接続されているスイッチ８００のポートＰ５で受信された後、再びスイッチ８００のポートＰ４からスイッチ９００のポートＰ１に送信され、ループが生じることになる。

トで受信したパケットは、切替ペアを組むもう一方のポートを除いた全ての転送可能なポートに転送する必要がある。そこで、図７の第３の構成では、転送複製情報付加部４の内部で転送先ポート情報をデコードしてパケットに付加するタグ値を生成するときに、ＢＣ抑制部１３で切替ペアとなるポートへの転送指定を削除するように構成する。

【００５３】

第３の構成の実施の形態を図８に示す。

例えば、図１の動作概要の例に示すスイッチのように、ポートＰ１～Ｐ６の６ポートで構成されるスイッチの場合は、転送先ポート情報のデコード結果がビットマップになる場合は、各ビットがＰ１～Ｐ６に対応する６ビットの情報で構成され、"１００００００"ならばＰ１に転送することを示す。このとき、パケットをブロードキャストする必要がある場合のデコード結果は、自分自身を除く全てのポートに転送するため、例えば、図１のスイッチ９００のポートＰ１から転送する場合は、ポートＰ１と未接続のポートＰ３を除く"０１０１１１"というビットパターンになる。ところが、スイッチ９００のポートＰ１とＰ２は切替ペアを構成しているため、ポートＰ１で受信したパケットをポートＰ２に転送してはいけない。そこで、図８の実施例に示すように、ＢＣ制御部１３の中に切替ペア情報レジスタ６６を設けて、切替ペアポートへの転送を抑止するためのマスク情報として、例えば"１０１１１１"という情報を書き込んでおく。そして、ＡＮＤゲート６７によってデコード結果と切替ペア情報レジスタ６６の内容をそれぞれビットで論理積をとる。結果のビットマップ形式の転送先ポート識別情報は"０００１１１"となり、これをタグ値としてスイッチ部５００に渡すことにより、ループを生じることなくブロードキャストを行うことができる。

（４）第４の構成と実施の形態

図２の構成におけるスイッチの受信処理部の第４の構成を図９に示す。

【００５４】

本構成は、前記第１の構成に、プロトコルパケット分離部１４とフィルタ部１５を追加した構成となっている。

プロトコルパケット分離部１４は、受信したパケットの宛先アドレスによって、例えば、スパニングツリーのプロトコルパケットであるＳＴＰ－ＢＰＤＵ（Ｂｒｉｄｇｅ Ｐｒｏｔｏｃｏｌ Ｄａｔａ Ｕｎｉｔ）といったプロトコルパケットを分離し、プロトコル処理部４００に引き渡して、プロトコルパケット用の処理を行う。

【００５５】

本構成では、一つの論理リンクに対して二つの物理リンクが対応するため、例えばＳＴＰのようなプロトコルでは、運用系／予備系の両方のリンクに同一の内容を持つＳＴＰ－ＢＰＤＵを送信し、受信側で運用系からのＳＴＰ－ＢＰＤＵのみを処理する必要がある。この場合、運用系／予備系ともＳＴＰ－ＢＰＤＵをプロトコル処理部４００に渡し、プロトコル処理部４００で運用系／予備系のどちらのポートから来たパケットかを識別して処理する方法もあるが、切り替えが発生した場合には、切り替えに合わせてプロトコル処理部４００もＳＴＰ－ＢＰＤＵを取り込むポートを変えなければならず、切り替え動作にプロトコル処理部が影響を受けることになる。

【００５６】

本構成では、フィルタ部１５が運用系／予備系設定情報を持ち、運用系であればＳＴＰ－ＢＰＤＵなどのプロトコルパケットをプロトコル処理部に渡し、予備系であればプロトコルパケットを廃棄するように動作する。これにより、プロトコル処理部４００には常に運用系として設定されているポートからのプロトコルパケットしか受信されないため、プロトコル処理部４００は切り替えを意識することなく処理を行うことができる。

【００５７】

第４の構成の実施の形態を図１０に示す。

プロトコルパケット分離部１４はフィルタ９１で構成され、フィルタ部１５はＦＩＦＯキュー ＦＩＦＯ ６８と、それを制御するメモリ制御部９２とで構成される。フィルタ９１

定のプロトコルのパケットを認識し、そのパケットをＦＩＦＯ　６８に格納する。そのときメモリ制御部９２が運用系に設定されていれば通常のメモリ制御動作を行うが、予備系に設定されている場合は読み出し動作を行わないように動作する。このような動作により、フィルタ９１から分離されたプロトコルパケットは、メモリ制御部９２が運用系に設定されていれば、ＦＩＦＯ　６８を通じてプロトコル処理部４００に転送されるが、メモリ制御部９２が予備系に設定されている場合、ＦＩＦＯ　６８に書き込まれても読み出されないため、プロトコル処理部４００には転送されない。

【００５８】

また、ここで、メモリ制御部９２が予備系に設定されている場合、読み出し動作を行わないとしたが、フィルタ９１によって分離されたプロトコルパケットを書き込む制御を行わない方法もある。この場合、メモリ制御部９２が予備系に設定されていると、フィルタ９１で分離されたプロトコルパケットはＦＩＦＯ　６８に送られても書き込まれないため、プロトコルパケットはプロトコル処理部４００に送られない。

【００５９】

以上の動作により、運用系に設定されたポートからのプロトコルパケットのみがプロトコル処理部４００に渡される。切り替えが生じた場合でも、切り替えの設定に連動して、新しく運用系に設定されたポートからのプロトコルパケットがプロトコル処理部４００に引き渡される。

（５）第５の構成と実施の形態

図２の構成におけるスイッチの受信処理部の第５の構成を図１１に示す。

【００６０】

第５の構成は、第１の構成に比較して、宛先アドレスから転送先ポートの識別情報を取り出す転送情報テーブル５のかわりに、宛先アドレスから後述するビットマップテーブル１７を検索するためのインデックスを取り出す転送情報テーブル１６が設けられ、また、転送先ポート識別情報から切替ペアポート識別情報をとる出す切替ペアテーブル７のかわりに、前記インデックスから、スイッチ部５００が認識し易いをビットマップ形式のパケット転送先ポート情報を取り出すビットマップテーブル１７が設けられている。

【００６１】

また、転送複製情報付加部１８は、第１の構成の転送複製情報付加部４とは異なり、ポート識別情報から転送複製情報へのデコード部を備えていない。第１の構成では、転送先ポート識別情報および転送先ポートと切替ペアを組んでいるポートの識別情報の両方をデコードすることによって、スイッチ部５００が認識できる形式のタグ値として転送複製情報を生成していたが、第５の構成では、この転送複製情報となるタグ値がビットマップ形式の場合に、直接このビットマップ情報を取り出せるようにしたものである。このため、転送複製情報付加部１８にはデコード機能が不要になる。ビットマップ形式の転送複製情報では、一般に出力ポートの数だけのビットが必要になるため、直接転送情報テーブル１６でビットマップ情報を検索しようとすると、転送情報テーブルを構成するＲＡＭ等のビット数が非常に大きくなってしまう。また、この転送情報テーブルは受信したパケットの送信元アドレスからの学習によってエントリを追加していくため、ビットマップ情報では学習処理が煩雑となる。そこで、本構成では、転送情報テーブル１６からビットマップテーブル１７を検索するためのインデックスを取り出し、そのインデックスを使って、ビットマップテーブル１７から転送先となる運用系と予備系のポートを示すビットマップ情報を取り出す。インデックスはビットマップテーブル１７を検索するためのものなので、システムで任意に決めることができる。転送情報テーブル１６ではこのインデックスを学習して記憶する。

【００６２】

第５の構成の実施の形態を図１２に示す。

転送情報抽出部３で抽出された宛先アドレスは、ＣＡＭ制御部７０に渡され、ＣＡＭ制御

。ビットマップテーブル制御部７１は、渡されたインデックスをキーにしてビットマップテーブル１７を構成するビットマップテーブルＲＡＭ７２を検索し、転送複製情報となるビットマップ情報を獲得する。ビットマップ情報は、例えば、図１の動作概要で示す６ポートで構成されるスイッチを使用する場合、それぞれのポートが１ビットに対応し、６ビットで構成される。そして、各ポートに対応するビットが”１”の場合はそのポートに転送し、”０”の場合は転送しない。獲得したビットマップ情報は、運用予備切替部７３に渡される。運用予備切替部７３では、そのポートが運用系に設定されていれば、ビットマップをそのまま通過させ、予備系に設定されていたら、全てのビットを”０”にする。これにより、予備系に設定されているときは、どこにも転送されず、運用系に設定されているポートで受信したパケットだけを転送することができる。

（６）第６の構成と実施の形態

図２の構成におけるスイッチの受信処理部の第６の構成を図１３に示す。

【００６３】

本構成は、転送先の運用系と予備系のポート番号を合わせて転送情報テーブルに書き込んでおく方法である。こうすることで、受信パケットの転送時にテーブルアクセスを１回で済ますことができるようになる。

学習情報抽出部２１は受信したパケットから送信元アドレスと該パケットを受信したポートの識別情報をペアにして他のポートの学習制御部２２に渡す。逆に、他のポートの学習情報抽出部２１からは、そのポートが受信したパケットから抽出した送信元アドレスと該ポートの識別情報が学習制御部２２に渡される。学習制御部２２では、渡された情報のポート識別情報から、そのポートと切替ペアになっているポートの識別情報を、切替ペアテーブル７を検索して取り出す。この部分の動作は、第１の構成の切替ペアテーブルの検索と同じである。こうして得られた運用系と予備系のポート識別情報のペアと送信元アドレスを転送情報テーブル１９に書き込む。この際、転送情報テーブル１９に既に該送信元アドレスについてのエントリがあれば書き込まず、エントリがない場合に書き込む。

【００６４】

受信したパケットを転送する場合は、パケットから抽出した宛先アドレス等の転送情報から転送情報テーブル１９を検索し、転送先の運用系のポート識別情報と予備系のポート識別情報を同時に獲得する。

転送先の運用系ポート識別情報と予備系ポート識別情報を得た後の動作は、第１の構成の場合と同じである。

【００６５】

第６の構成の実施の形態を図１４に示す。

まず、伝送路からパケットを受信すると、転送するための転送情報を抽出すると同時に、送信元アドレス抽出部７４でパケットから送信元アドレスを抽出する。抽出した送信元アドレスはこのパケットを受信したポートの識別情報となるポート番号とともに、他のポートの学習制御部２２に渡される。

【００６６】

学習制御部２２の多重部７５では、他のそれぞれのポートから送られてきたアドレスと受信したポートの番号の対が多重化されてシーケンシャルに並べられ、切替ペアテーブル制御部７６に渡される。

切替ペアテーブル制御部７６では、受け取ったポート番号からそのポートと切り替えペアを組んでいるポートの番号を、切替ペアテーブルＲＡＭ６１をアクセスすることにより、取得する。

【００６７】

これで、そのアドレスに対する転送先の運用系と予備系のポート番号が得られたので、得られた運用系と予備系のポート番号とアドレスを組にしてＣＡＭ制御部７８に渡す。この情報はＣＡＭ７７に書き込まれるので図１３の第６の構成では転送情報テーブル１９に渡すように記述されているが、厳密にはパケット転送時の転送情報テーブル１９へのアクセ

。書き込む際には、まずＣＡＭ制御部７８は受け取ったアドレスを用いてＣＡＭ７７をアクセスし、エントリがあるか否かを確認し、あれば処理を終了するが、なければ受け取った転送先の運用系と予備系のポート番号を同時にＣＡＭ７７に書き込む。

【００６８】
伝送路から受信したパケットを転送するばあいは、転送情報抽出部３で抽出した宛先アドレスをＣＡＭ制御部７８に渡し、ＣＡＭ制御部７８ではその渡された宛先アドレスをもとにＣＡＭ７７を検索し、転送先の運用系と予備系のポート番号を取得する。その後の処理は、第１の構成の場合と同様である。

（７）第７の構成と実施の形態
図２の構成におけるスイッチの受信処理部の第７の構成を図１５に示す。

【００６９】
前記第６の構成では、転送先の運用系ポート識別情報と予備系ポート識別情報を転送情報テーブルに書き込んでいたが、第７の構成では転送複製情報となるビットマップ情報を直接、転送情報テーブルに書き込む点が異なる。パケットの転送先情報の学習処理としては、学習情報抽出部２１までの処理は前記第６の構成と同じである。

【００７０】
学習制御部２３では、他のポートの学習情報抽出部２１から該ポートの識別情報と受信したパケットの送信元アドレスを受け取る。該ポートの識別情報からビットマップテーブル１７を検索し、転送複製情報となるビットマップ情報を得る。また、該送信元アドレスをもとに転送情報テーブル２４を検索し、該送信元アドレスに対応するエントリに該ビットマップ情報を書き込む。書き込む条件は、前記第６の構成の場合と同じで、転送情報テーブル２４にエントリがなければ書き込み、あれば書き込まない。

【００７１】
パケットを転送する場合は、受信したパケットから抽出した宛先アドレスから転送情報テーブル２４を検索し、転送複製情報となるビットマップ情報を得る。ビットマップ情報が得られた後の処理は、前記第５の構成の場合と同じである。
第７の構成の実施の形態を図１６に示す。
本実施の形態は、前記第６の構成による実施の形態で学習時に運用系と予備系のポート番号を学習するのを、転送複製情報となるビットマップ情報を学習するようにしたものである。

【００７２】
学習制御部２３の多重部７５までの処理は、前記第６の構成の実施の形態と同じである。パケットから取り出した送信元アドレスとそれを受信したポート番号を受け取ったビットマップテーブル制御部７９では、ポート番号を使ってビットマップテーブルＲＡＭ　９３をアクセスし、そのアドレスに対する転送複製情報となるビットマップ情報を得る。その後、ＣＡＭ　８０にそのビットマップ情報を書き込む。書き込む動作は、前記第６の構成の実施例で転送先の運用系と予備系のポート番号の代わりにビットマップ情報を書き込むだけで、動作の内容は、前記第６の構成の実施例と同じである。

【００７３】
伝送路から受信したパケットを転送する場合は、転送情報抽出部３で抽出した宛先アドレスによってＣＡＭ制御部８１はＣＡＭ　８０からビットマップ情報を得る。その後の転送動作は、前記第５の構成の実施の形態と同じである。

（８）第８の構成と実施の形態
図２の構成におけるスイッチの受信処理部の第８の構成を図１７に示す。

【００７４】
前記第６の構成ではパケットの送信元アドレスと転送先の運用系ポートの識別情報を学習して転送情報テーブルに蓄積するためにポート間で転送先ポートの識別情報を交換するが、第８の構成では、予め転送先の運用系と予備系の両方のポート識別情報をアドレスと共に学習のためにポート間で交換する。従って、他のポートから送られてくる学習情報に

に書き込むことができ、切替ペアテーブルを参照する必要がない点が、前記第６の構成との違いである。ただし、ポート間で学習のために交換する情報量が増えるため、ポート数が大きい場合には前記第６の構成が望ましい。

【００７５】

第８の構成では、まず、ペアポート情報設定部２６には、予めそのポート自身の切替ペアポートの識別情報が設定される。学習情報抽出部２７では、パケットから抽出した送信元アドレスとパケットを受信したポートの識別情報、それにペアポート情報設定部２６からの切替ペアポート識別情報を組にして、他のポートの多重部２８に送る。逆に、他のポートからも同様な運用系と予備系のポート識別情報とアドレスの組が送られてくるので、それらを多重部２８で多重し、転送情報テーブル１９に書き込む。

【００７６】

多重部２８の出力から先の処理は、前記第６の構成の場合と同じである。

第８の構成の実施の形態を図１８に示す。

まず、学習の手順としては、学習情報抽出部２７の送信元アドレス抽出部７４で受信したパケットの送信元アドレスを抽出して、送信元アドレスとポート識別情報となるポート番号を組にし、多重部８３において、その組にさらに切替ペアポート番号レジスタ８２に設定されている切替ペアポート番号を加えた後、他のポートの多重部２８に送る。同様に、他のポートからはそのポートが受信したパケットの送信元アドレスと受信したポート番号およびそのポートと切替ペアを組むポートの番号が送られてくるので、多重部２８でそれらを多重する。多重した出力は、前記第６の構成の実施の形態の切替ペアテーブル制御部７６の出力と同じであり、この先の処理も前記第６の構成の場合と同じである。

【００７７】

また、パケット転送時の処理も前記第６の構成の場合と同じである。

（９）第９の構成と実施の形態

図２の構成におけるスイッチの受信処理部の第９の構成を図１９に示す。

前記第７の構成では、アドレスとパケット転送先の運用系ポート識別情報を学習のためポート間で交換するが、第９の構成では、転送複製情報となるビットマップ情報をアドレスと共に学習のためにポート間で交換する。前記第７の構成との違いは、学習情報がすでにビットマップ情報になっているため、転送情報テーブルに書き込む前にビットマップテーブルを参照する必要がないことであるが、ビットマップ情報の量が大きい場合には学習のために交換する情報が大きくなるため、前記第７の構成の方が望ましい。

【００７８】

第９の構成では、まずビットマップ情報設定部２９には、予め自分のポートの転送複製情報となるビットマップ情報を設定しておく。学習情報抽出部３０では、抽出した送信元アドレスの情報とビットマップ情報設定部２９に設定されているビットマップ情報を組にして他のポートの多重部３１に送る。逆に、他のポートからも同様にビットマップ情報とアドレスの組が送られてくるので、それらを、多重部３１で多重し、転送情報テーブル２４に書き込む。

【００７９】

多重部３１の出力から先の処理は、前記第７の構成の場合と同じである。

第９の構成の実施の形態を、図２０に示す。

パケットの転送先情報の学習の手順としては、まず学習情報抽出部３０にある送信元アドレス抽出部７４　　で受信したパケットの送信元アドレスを抽出する。前記第７の構成の実施例では、送信元アドレスとポート番号を組にしたが、第９の構成の実施例ではビットマップ情報レジスタ８４に設定されている転送複製情報となるビットマップ情報と送信元アドレスを多重部８５で組にする。できたアドレスとビットマップの組は、他のポートの多重部３１に送られる。他のポートからは、そのポートが受信したパケットの送信元アドレスとそのポートのビットマップ情報の組が送られてくるので、それらを多重部３１で多重する

多重部３１の出力は、前記第７の構成の実施の形態のビットマップテーブル制御部７９の出力と同じで、この先の処理は第７の構成の実施の形態と同じである。
また、パケット転送時の処理も前記第７の構成の実施の形態と同じである。
（１０）第１０の構成と実施の形態
図２の構成におけるスイッチの受信処理部の第１０の構成を図２１に示す。
【００８１】
第１０の構成では、故障やネットワーク運用者からの指示等によって切り替えを行った場合、切り替えを行ったことを通知するための切替情報生成部３５と、その情報を主信号に多重するための多重部３４を送信処理部を備え、受信処理部には切替情報検出部３２を備える。
切り替えを行うと、切替制御部３００から切り替えが行われたことが切替情報生成部３５に通知される。切替情報生成部３５は、切替情報を対向接続のスイッチへ通知するための信号を生成する。ここでは、切替情報通知専用のパケットを生成する場合について説明する。
【００８２】
切替情報生成部３５は、切替制御部３００から切り替えが行われたことが通知されると、切替情報通知専用のパケットを生成し、そこにその通知情報をのせる。多重部３４でスイッチ部５００から流れてくるユーザパケットと切替情報生成部３５で生成されたパケットを多重化した後、伝送路終端部３３で符号化やＥ／Ｏ変換などが行われ、リンクの対向側スイッチに送られる。この切替情報通知専用のパケットは、対向側スイッチのポートの受信処理部１００に入ると、切替情報検出部３２で切替情報が取り出され、その情報が切替制御部３００に渡される。対向側スイッチの切替制御部３００は、この情報を受け取ると、転送先ポート決定部６に運用モードの設定を行い、切り替えが発生する。
【００８３】
切替情報を対向接続のスイッチから受信して切り替えを行った場合、切替制御部３００は切替情報生成部３５にたいして切り替えが行われた情報を通知しない。
以上の動作により、一方向のリンクで切り替えが行われた場合に、逆方向のリンクも自動的に切り替わることができる。
切り替えの動作は、前記第１の構成の場合と同じである。
【００８４】
第１０の構成の実施の形態を図２２に示す。
一方向のリンクについての切り替えは、前記第１の構成の実施の形態と同じである。例えば、図１の動作概要でスイッチ９００のポートＰ１とＰ２の受信処理部で切り替えが行われたとする。切り替えが完了した後、切替制御部３００は切り替え情報を切替情報パケット生成部８８に渡す。この情報は、切り替えが発生したという１ビットの情報で十分だが、その他に現在運用系になっているポートの識別情報などを含むこともできる。
【００８５】
切替情報パケット生成部８８では、切替情報通知用のパケットを生成し、その中に切替制御部３００から受け取った情報を挿入する。切替情報通知用パケットは転送対象のパケットとともに伝送されるため、パケット多重部８９で転送対象のパケットと多重する。その際に、切替情報通知用パケットとの競合を防ぐためにＦＩＦＯ９０があり、切替情報通知用パケットを送信している間は転送対象のパケットを待たせるようにしている。この情報は運用系リンクまたは予備系リンクのいずれか、または両方を使い、図１に示すスイッチ８００へ送信される。スイッチ８００の各ポートの受信処理部にはフィルタ部８６があり、宛先アドレスやパケットの内容を示すタイプフィールドなどを照合することにより、切替情報通知用パケットを転送対象パケットの流れから分離し、切替情報抽出部８７に渡す。
【００８６】
切替情報抽出部８７では、切替情報パケット生成部８８で入れられた切替情報を取り出し

。ただし、切替制御部３００が切替情報抽出部８７から受け取った情報で切り替えを実行した場合は、切替情報パケット生成部８８に対し切替情報を渡さないようにする。

【００８７】

（付記１）　イーサネットネットワークに接続して、複数のポート間のパケットの転送を行うイーサネットスイッチにおいて、

各ポートに運用系または予備系いずれかの運用モードの設定を行う切替制御手段と、運用系ポートで受信したパケットの宛先アドレスから転送先となる運用系ポートの識別情報を検索できる転送情報記憶手段と、該転送先となる運用系ポートの識別情報から該転送先となる運用系ポートと対をなす予備系ポートの識別情報を獲得する手段を備え、該運用系ポートで受信したパケットをその転送先となる運用系ポートおよび該転送先となる運用系ポートと対をなす予備系ポートに転送し、該予備系ポートで受信したパケットを廃棄することを特徴とするイーサネットスイッチ。

（付記２）　付記１に記載のイーサネットスイッチにおいて、

伝送路の故障を検出して前記切替制御手段に通知する手段を備え、該切替制御手段は、故障を検出した運用系ポートを予備系に設定し、該運用系ポートと対をなす予備系ポートを運用系に設定することを特徴とするイーサネットスイッチ。

【００８８】

（付記３）　付記１に記載のイーサネットスイッチにおいて、

前記運用系ポートで受信したパケットを、前記運用系ポートと対をなす予備系ポートへ転送することを抑止することを特徴とするイーサネットスイッチ。

（付記４）　付記１に記載のイーサネットスイッチにおいて、

網構成制御のためのプロトコルパケットを受信時は、受信したポートが運用系のときは該プロトコルパケットをプロトコル処理手段に渡し、該ポートが予備系のときは該プロトコルパケットを廃棄することを特徴とするイーサネットスイッチ。

（付記５）　付記１に記載のイーサネットスイッチにおいて、

パケットの転送先ポートを識別できるビットマップ形式の転送先ポート情報を記憶する手段を備え、受信したパケットの宛先アドレスから、ビットマップ形式の該転送先ポート情報を検索することを特徴とするイーサネットスイッチ。

【００８９】

（付記６）　付記１に記載のイーサネットスイッチにおいて、

パケットを受信した第一の運用系ポートの識別情報と該パケットの送信元アドレスとから成る転送情報を第二の運用系ポートに送信する転送情報送信手段と、第二の運用系ポートの該転送情報送信手段により送信されてくる第二の運用系ポートの転送情報を受信する転送情報受信手段を備え、該転送情報受信手段により受信した転送情報に第二の運用系ポートと対をなす予備系ポートの識別情報を付加して前記転送情報記憶手段に格納し、受信したパケットの宛先アドレスから前記転送情報記憶手段を検索して転送先となる運用系および予備系ポートの識別情報を検索することを特徴とするイーサネットスイッチ。

（付記７）　付記６に記載のイーサネットスイッチにおいて、

パケットの転送先ポートを識別できるビットマップ形式の転送先ポート情報を記憶する手段を備え、前記転送情報受信手段により受信した転送情報の中の前記第二の運用系ポートの識別情報からビットマップ形式の該転送先ポート情報を検索して前記転送情報記憶手段に格納し、受信したパケットの宛先アドレスから、ビットマップ形式の該転送先ポート情報を検索することを特徴とするイーサネットスイッチ。

（付記８）　付記６に記載のイーサネットスイッチにおいて、
前記転送情報送信手段は、前記転送情報として、パケットを受信した前記第一の運用系ポートと対をなす予備系ポートの識別情報を付加して送信し、前記転送情報受信手段で受信した転送情報を前記転送情報記憶手段に格納する
ことを特徴とするイーサネットスイッチ。

【００９１】
（付記９）　付記７に記載のイーサネットスイッチにおいて、
前記転送情報送信手段は、前記転送情報として、受信したパケットの送信元アドレスと、該パケットを受信した前記第一の運用系ポートおよび該第一の運用系ポートと対をなす予備系ポートを転送先とするビットマップ形式の転送先ポート情報とを送信し、前記転送情報受信手段により受信した転送情報に含まれるビットマップ形式の転送先ポート情報を前記転送情報記憶手段に格納し、受信したパケットの宛先アドレスから、ビットマップ形式の該転送先ポート情報を検索することを特徴とするイーサネットスイッチ。

【００９２】
（付記１０）　付記１に記載のイーサネットスイッチにおいて、
該イーサネットスイッチのポートに対向接続されているイーサネットスイッチに対して、運用モードの設定変更を行った旨を通知する手段と、対向接続されているイーサネットスイッチからの運用モードの設定変更の通知を受信して前記切替制御手段に渡し、前記切替制御手段は該通知を受信したポートの運用モードを該通知の内容に従って設定変更する
ことを特徴とするイーサネットスイッチ。

【００９３】
【発明の効果】
以上詳述した如く、本発明によれば、イーサネットネットワークに接続して、複数のポート間のパケット転送を行うイーサネットスイッチにおいて、伝送路に故障が発生したとき、ネットワークへの影響を最小限に押さえた形で、高速に伝送ポートの切り替えを行うことができるようになる。

【図面の簡単な説明】
【図１】本発明によるスイッチの概要
【図２】本発明によるスイッチの構成
【図３】本発明によるスイッチの受信処理部の第１の構成
【図４】本発明による第１の構成の実施の形態
【図５】本発明によるスイッチの受信処理部の第２の構成
【図６】本発明による第２の構成の実施の形態
【図７】本発明によるスイッチの受信処理部の第３の構成
【図８】本発明による第３の構成の実施の形態
【図９】本発明によるスイッチの受信処理部の第４の構成
【図１０】本発明による第４の構成の実施の形態
【図１１】本発明によるスイッチの受信処理部の第５の構成
【図１２】本発明による第５の構成の実施の形態
【図１３】本発明によるスイッチの受信処理部の第６の構成
【図１４】本発明による第６の構成の実施の形態
【図１５】本発明によるスイッチの受信処理部の第７の構成
【図１６】本発明による第７の構成の実施の形態
【図１７】本発明によるスイッチの受信処理部の第８の構成
【図１８】本発明による第８の構成の実施の形態
【図１９】本発明によるスイッチの受信処理部の第９の構成
【図２０】本発明による第９の構成の実施の形態
【図２１】本発明によるスイッチの受信処理部の第１０の構成
【図２２】本発明による第１０の構成の実施の形態
【図２３】本発明によるスイッチの受信処理部の構成例

【図２４】従来技術によるスイッチの構成
【図２５】従来技術によるスイッチの動作概要
【符号の説明】
Ａ～Ｆ　端末装置
Ｐ１～Ｐ６　イーサネットスイッチ内の相対的なポートの識別記号
１，３３　伝送路終端部
２　警報検出部
３　転送情報抽出部
４　転送複製情報付加部
５，１６，１９，２４　転送情報テーブル
６，２０，２５　転送先ポート決定部
７　切替ペアテーブル
９，１４，１８　転送複製情報付加部
１３　ＢＣ抑制部
１４　プロトコルパケット分離部
１５　フィルタ部
１７　ビットマップテーブル
２１，２７，３０　学習情報抽出部
２２，２３　学習制御部
２６　ペアポート情報設定部
２８，３１，３４，７５，８３　多重部
２９　ビットマップ情報設定部
３２　切替情報検出部
３５　切替情報生成部
５１　Ｏ／Ｅ
５２　復号部
５３　宛先アドレス抽出部
５４，９０　ＦＩＦＯ
５５　タグ付加部
５６，６９，７７，８０　ＣＡＭ
５７，７０，７８，８１　ＣＡＭ　制御部
５８，７６　切替ペアテーブル制御部
５９，７３　運用予備切替部
６０　デコード部
６１　切替ペアテーブルＲＡＭ
６２　ＯＲゲート
６３　ＲＳ　Ｆ／Ｆ
６４，６７　ＡＮＤゲート
６５　Ｄ－Ｆ／Ｆ
６６　切替ペア情報レジスタ
６８　切替ペアテーブル制御部
７１，７９　ビットマップテーブル制御部
７２，９３　ビットマップテーブルＲＡＭ
７４　送信元アドレス抽出部
８２　切替ペアポート番号レジスタ
８４　ビットマップ情報レジスタ
８７　切替情報抽出部
８８　切替情報パケット生成部
８９　パケット多重部

９２　メモリ制御部
１００，２００　受信処理部
１１０，２１０　送信処理部
３００　切替制御部
４００　プロトコル処理部
５００　スイッチ部
８００，９００　スイッチ

【図１】

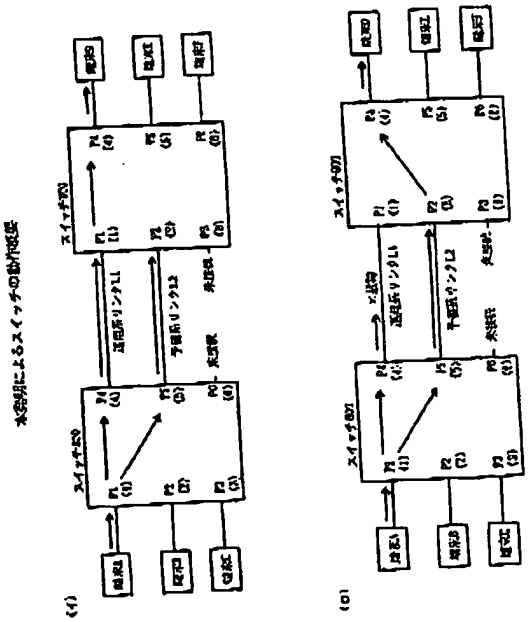

【図２】

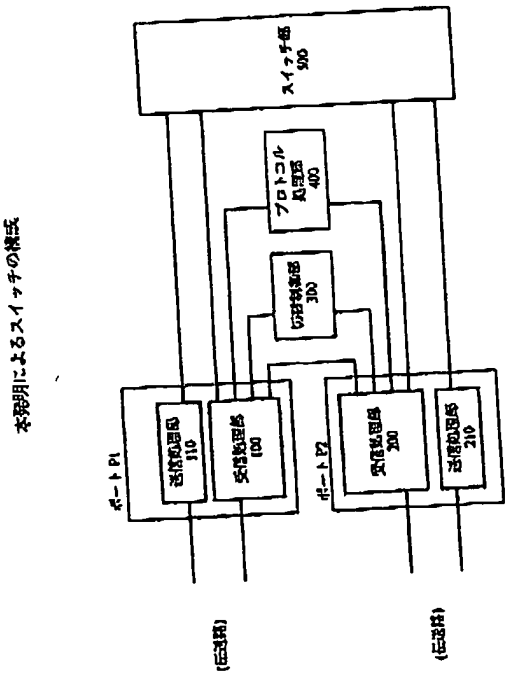

【図3】

本発明によるスイッチの受信処理部の第1の構成

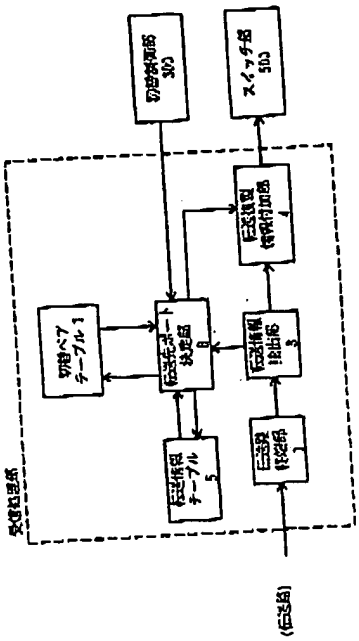

【図4】

本発明による第1の構成の実施の形態

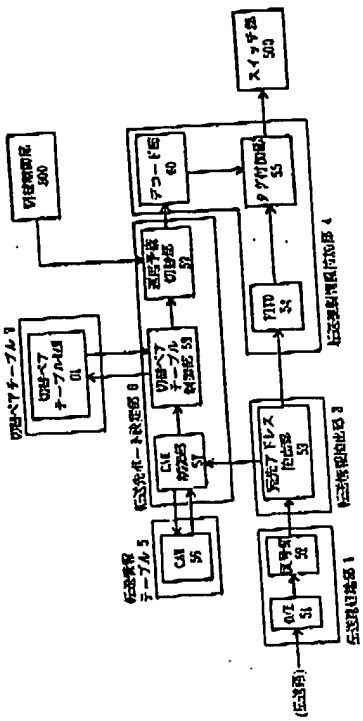

【図5】

本発明によるスイッチの受信処理部の第2の構成

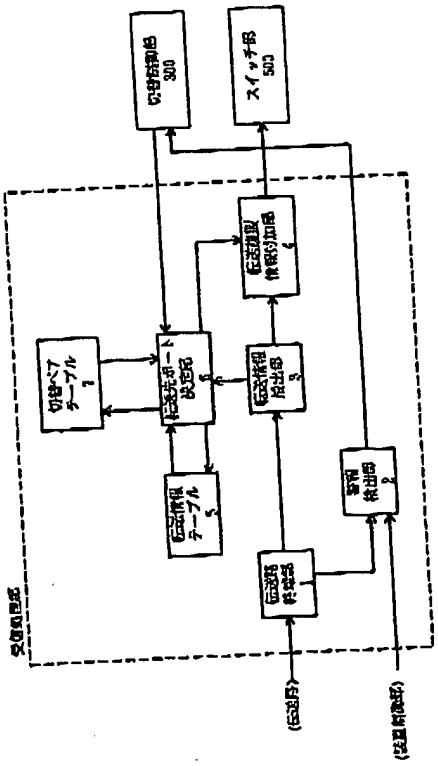

【図6】

本発明による第2の構成の実施の形態

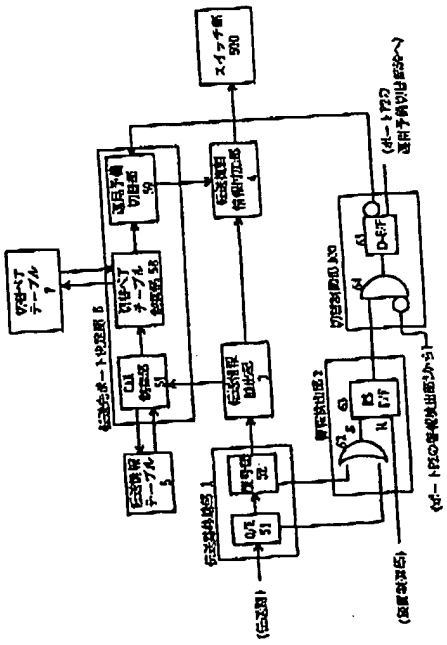

【図7】

本発明によるスイッチの受信処理部の第3の構成

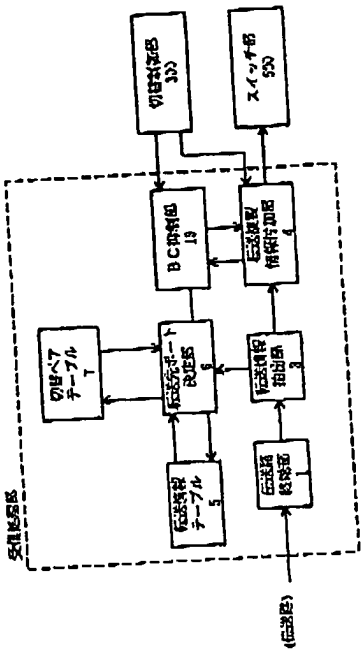

【図8】

本発明による第3の構成の実施の形態

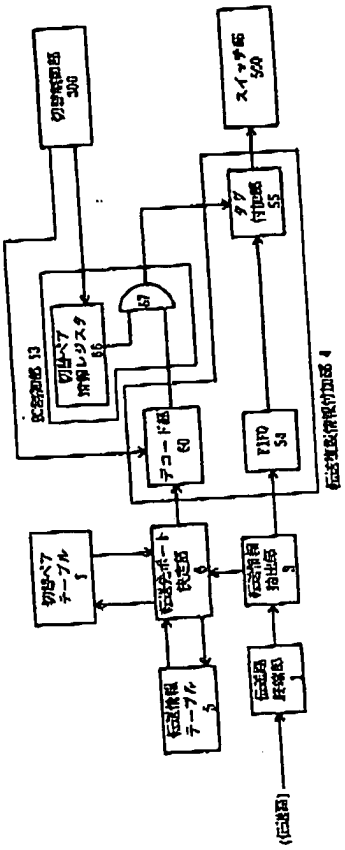

【図9】

本発明によるスイッチの受信処理部の第4の構成

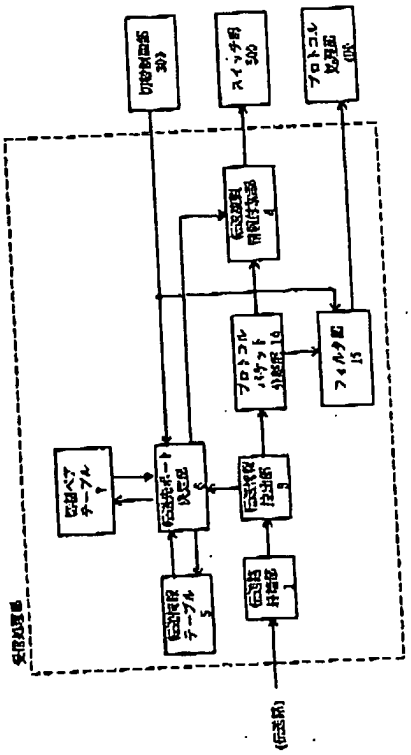

【図10】

本発明による第4の構成の実施の形態

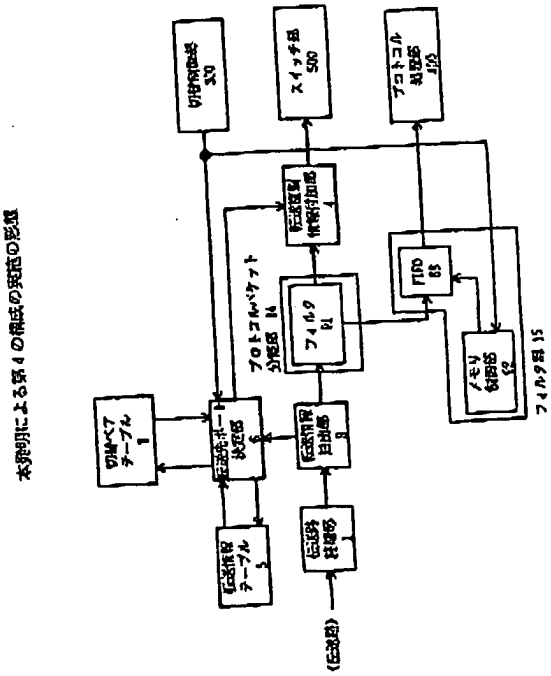

【図１１】

本発明によるスイッチの受信処理部の第５の構成

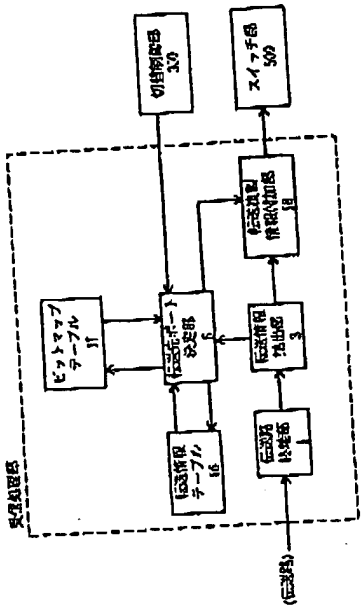

【図１２】

本発明による第５の構成の実施の形態

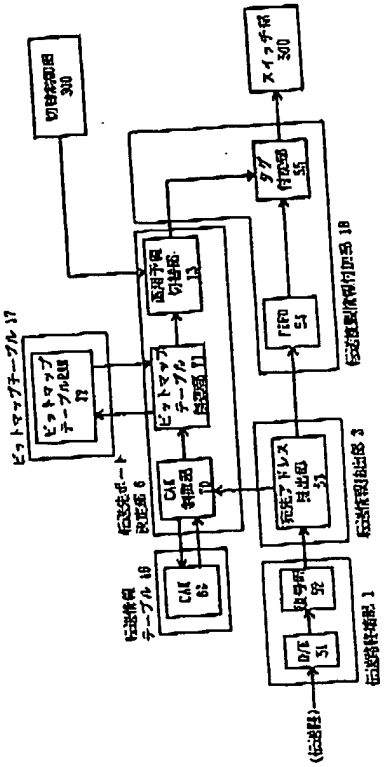

【図１３】

本発明によるスイッチの受信処理部の第６の構成

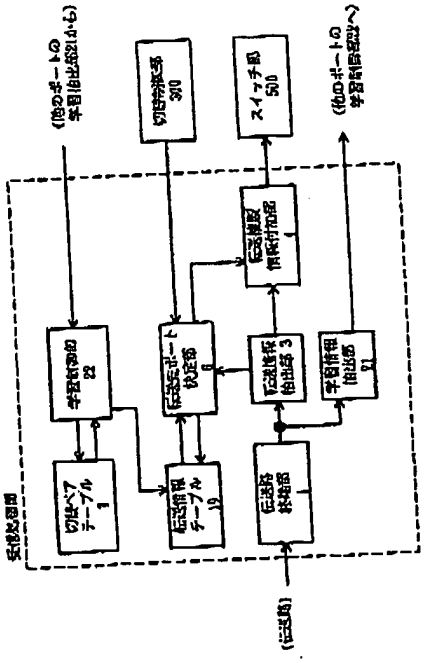

【図１４】

本発明による第６の構成の実施の形態

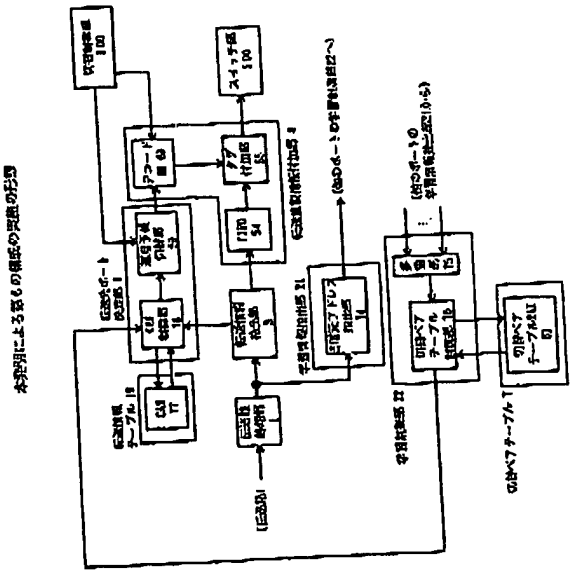

【図１５】

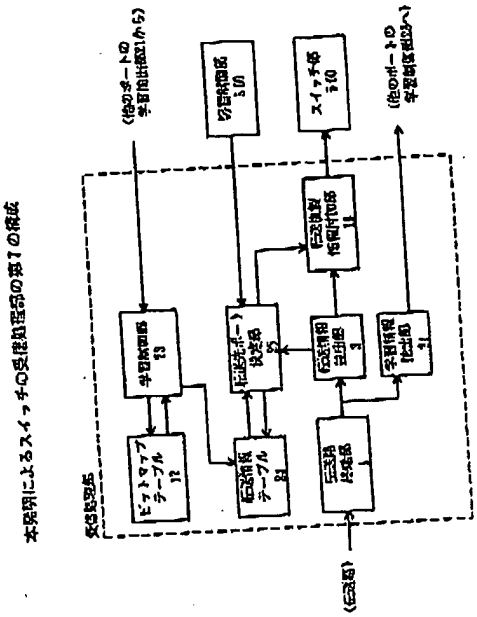

【図１６】

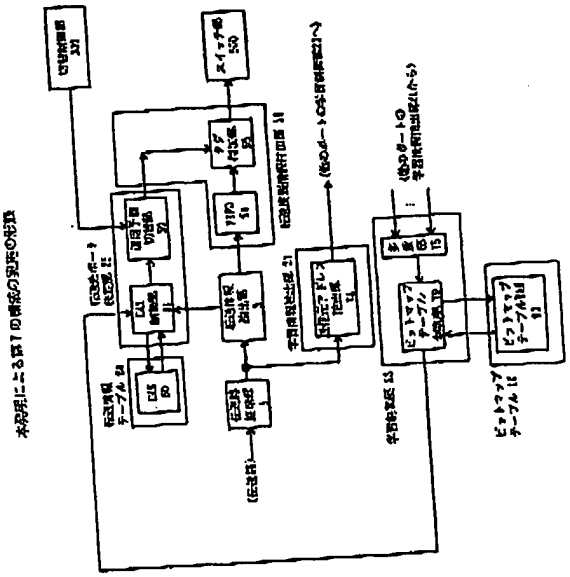

【図１７】

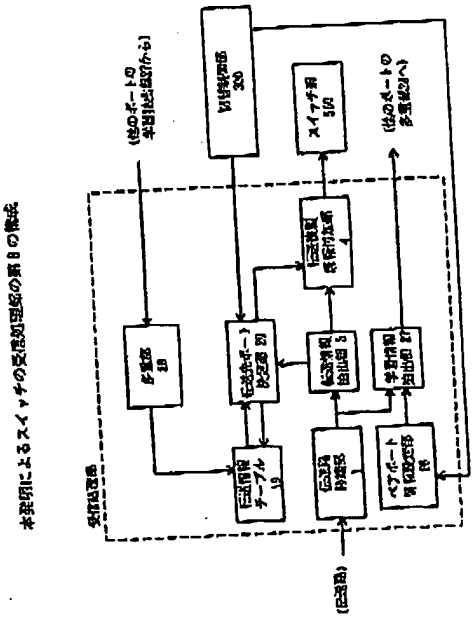

【図１８】

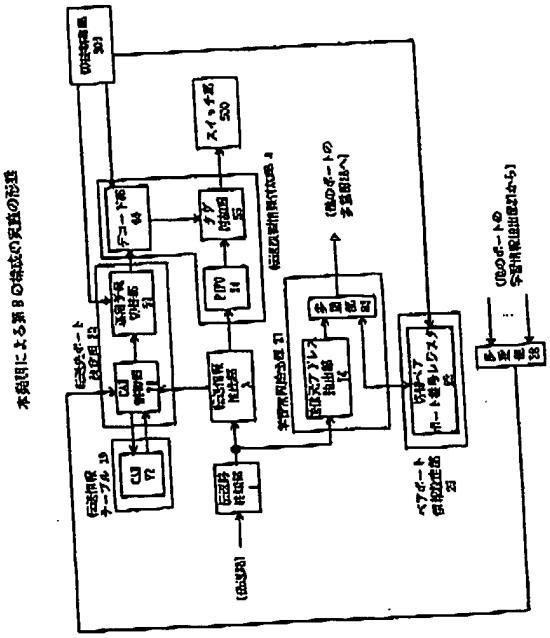

【図１９】

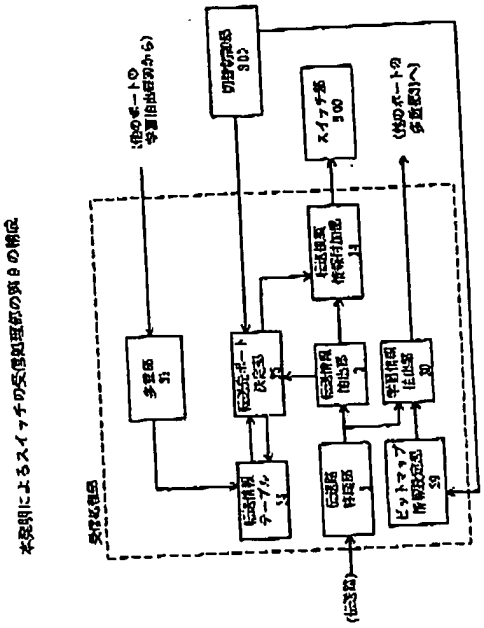

【図２０】

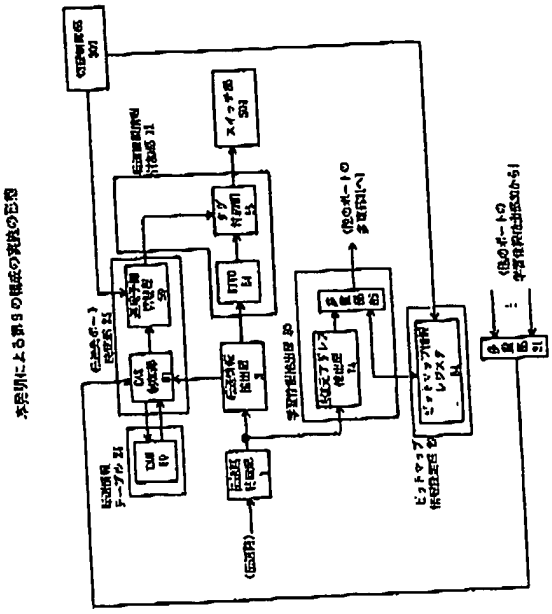

【図２１】

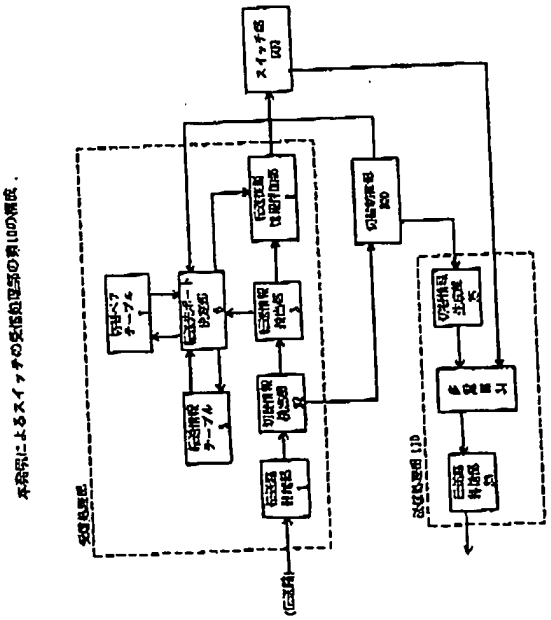

【図２２】

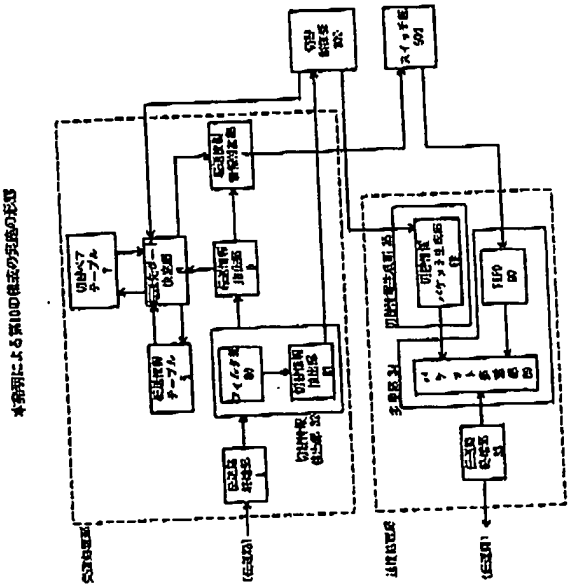

【図２３】

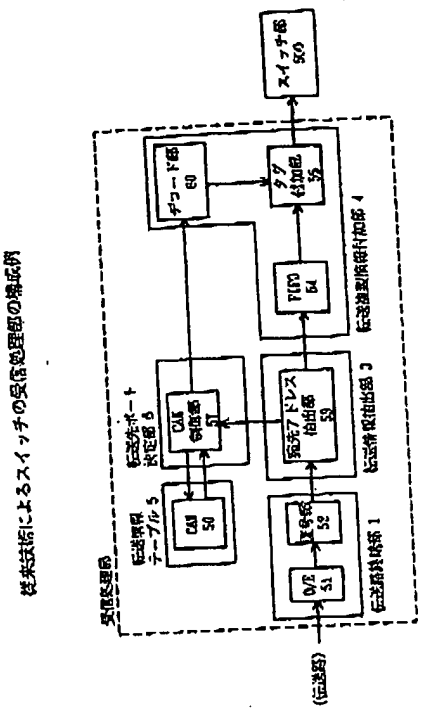
従来技術によるスイッチの受信処理部の構成例
受信処理部
伝送情報テーブル 5
CAM 50
伝送先ポート決定部 6
CAM 領域部 57
宛先アドレス抽出部 53
伝送情報抽出部 3
FIFO 54
タグ付加部 55
デコード部 60
伝送推奨情報付加部 4
スイッチ部 500
O/E 51
証号部 52
伝送路終端部 1
(伝送路)

【図２４】

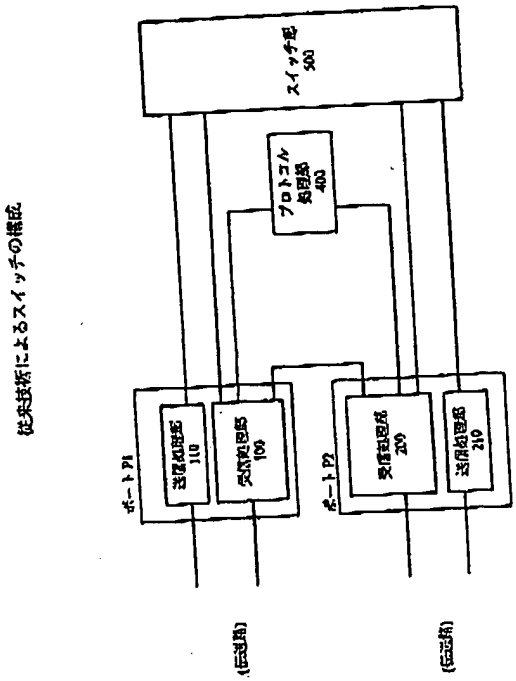
従来技術によるスイッチの構成
スイッチ部 500
プロトコル処理部 400
ポートP1
送信処理部 110
受信処理部 100
ポートP2
受信処理部 200
送信処理部 210
(伝送路)
(伝送路)

【図２５】

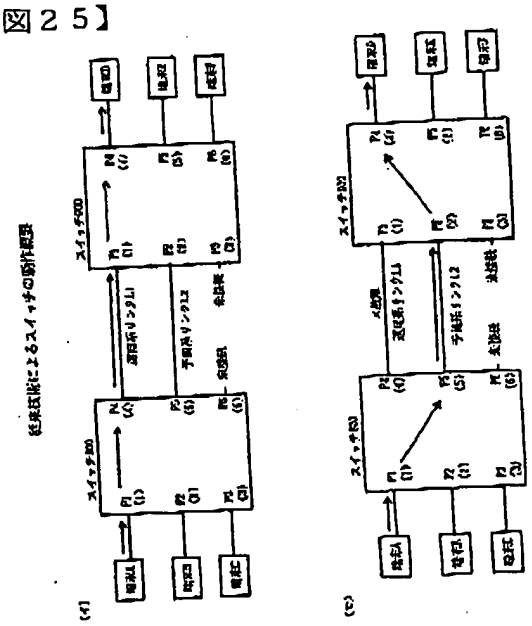
従来技術によるスイッチの動作概要
スイッチ200
スイッチ300
スイッチ400
スイッチ500
(イ)
(ロ)

フロントページの続き

【要約の続き】
【選択図】 図1

UNITED STATES PATENT AND TRADEMARK OFFICE

16 NOV 2009

Commissioner for Patents
United States Patent and Trademark Office
P.O. Box 1450
Alexandria, VA 22313-1450
www.uspto.gov

Finnegan, Henderson, Farabow, Garrett & Dunner
901 New York Avenue, NW
Washington, D.C. 20001-4413

In re Application of
FUJIYAMA et al.
Application No.: 12/373,072
PCT No.: PCT/JP2007/063451
Int. Filing Date: 05 July 2007
Priority Date: 12 July 2006
Attorney Docket No.: 07481.0104-00000
For: GAS-SOLID SEPARATOR

DECISION ON
PAPERS UNDER 37 CFR 1.42

This decision is issued in response to applicant's declaration filed 29 October 2009, which is being treated as a request under 37 CFR 1.42. No petition fee is due.

BACKGROUND

On 05 July 2007, applicant filed international application PCT/JP2007/063451, which claimed a priority date of 12 July 2006. Pursuant to 37 CFR 1.495, the deadline for payment of the basic national fee in the United States was to expire 30 months from the priority date, 12 January 2009.

On 09 January 2009, applicant filed a transmittal letter for entry into the national stage in the United States accompanied, inter alia, the basic national fee, an English translation of the international application; and a preliminary amendment.

On 03 September 2009, the United States Designated/Elected Office mailed a Notification of Missing Requirements (PCT/DO/EO/905) requiring submission of an oath or declaration in compliance with 37 CFR 1.497 and the surcharge under 37 CFR 1.492(h).

On 29 October 2009, applicant filed a declaration/power of attorney executed by inventor Yuichiro Fujiyama and Shigeko Okuhara on behalf of deceased inventor, Toshiaki Okuhara.

DISCUSSION

37 CFR 1.42 When the Inventor is Dead, states, in part:

In case of the death of the inventor, the legal representative (executor, administrator, etc.) of the deceased inventor may make the necessary oath or declaration, and apply for and obtain the patent.

The declaration submitted on 29 October 2009 was executed by Shigeko Okuhara as "legal successor" of deceased inventor, Toshiaki Okuhara. However, the declaration does not state that Shigeko Okuhara is the "legal representative" or sole heir of the deceased inventor. Accordingly, the declaration fails to identify the proper relationship under 37 CFR 1.42.

CONCLUSION

For the above reasons, the request for status under 37 CFR 1.42 is **REFUSED**.

Applicant is required to provide an oath/declaration in compliance with 37 CFR 1.497(a)-(b) within **TWO (2) MONTHS** from the mail date of this Decision. Failure to respond will result in the abandonment of the application. Any reconsideration request should include a cover letter entitled "Renewed Submission Under 37 CFR 1.42" and must include an acceptable declaration under 37 CFR 1.497 which has been executed by the either the legal representative of the deceased inventor or, if no legal representative has been appointed, all of the heirs of the deceased inventor.

Any further correspondence with respect to this matter may be filed electronically via EFS-Web selecting the document description "Petition for review and processing by the PCT Legal Office" or by mail addressed to Mail Stop PCT, Commissioner for Patents, Office of PCT Legal Administration, P.O. Box 1450, Alexandria, Virginia 22313-1450, with the contents of the letter marked to the attention of the Office of PCT Legal Administration.

Anthony Smith
Attorney-Advisor
Office of PCT Legal Administration
Tel: (571) 272-3298
Fax: (571) 273-0459

UNITED STATES PATENT AND TRADEMARK OFFICE

Commissioner for Patents
United States Patent and Trademark Office
P.O. Box 1450
Alexandria, VA 22313-1450
www.uspto.gov

1 8 FEB 2010

Finnegan, Henderson, Farabow, Garrett & Dunner
901 New York Avenue, NW
Washington, D.C. 20001-4413

In re Application of	:	
FUJIYAMA et al.	:	
Application No.: 12/373,072	:	DECISION ON
PCT No.: PCT/JP2007/063451	:	PAPERS UNDER 37 CFR 1.42
Int. Filing Date: 05 July 2007	:	
Priority Date: 12 July 2006	:	
Attorney Docket No.: 07481.0104-00000	:	
For: GAS-SOLID SEPARATOR	:	

In a decision mailed by this Office on 16 November 2009, the declaration filed by applicant on behalf of deceased inventor Toshiaki Okuhara was dismissed for failure to include all the information required under 37 CFR 1.497.

On 13 January 2010, applicant filed a response to the previous communication that was accompanied by a revised declaration. The declaration submitted on 13 January 2010 identifies the deceased inventor and states the deceased inventor's country of citizenship and residence, is signed by Shigeko Okuhara as "Legal Representative," states his/her relationship to the deceased (i.e., Legal Representative), and provides the Legal Representative's country of citizenship and residency. Accordingly, the declaration complies with the requirements of 37 CFR 1.497(b)(2) and 37 CFR 1.42.

The request for status under 37 CFR 1.42 is **GRANTED**.

The application will be forwarded to the National Stage Processing Branch of the Office of PCT Operations for further processing in accordance with this decision.

Anthony Smith
Attorney-Advisor
Office of PCT Legal Administration
Tel: (571) 272-3298
Fax: (571) 273-0459

- 6 JAN 2010

UNITED STATES PATENT AND TRADEMARK OFFICE

Commissioner for Patents
United States Patent and Trademark Office
P.O. Box 1450
Alexandria, VA 22313-1450
www.uspto.gov

FINNEGAN, HENDERSON, FARABOW, GARRETT & DUNNER
LLP
901 NEW YORK AVENUE, NW
WASHINGTON DC 20001-4413

In re Application of	:	
OKUHARA (Deceased)	:	DECISION ON
Application No.: 12/373,103	:	
PCT No.: PCT/JP06/63716	:	REQUEST
Int. Filing Date: 10 July 2006	:	
Priority Date: 12 July 2006	:	UNDER 37 CFR 1.42
Attorney Docket no.:07481.0102-00000		
For: MIXING APPARATUS		

This is a decision on applicant's request under 37 CFR 1.42 along with an executed declaration filed in the United States Patent and Trademark Office (USPTO) on 03 June 2009.

BACKGROUND

On 03 June 2009, applicant filed an executed declaration identifying Shigeko Okuhara as the legal representative of the deceased inventor Toshiaki Okuhara.

DISCUSSION

37 CFR § 1.42 requires that in the case of the death of the inventor, the legal representative of the deceased inventor may make the necessary oath or declaration, and apply for and obtain a patent.

37 CFR 1.497(a)(3) requires that the declaration identify each inventor and the country of citizenship of each inventor. 37 CFR 1.497(b)(2) requires the declaration to state the relationship of the person (under 37 CFR 1.42) making the declaration for a deceased inventor. 37 CFR 1.497(b)(2) further states that, if the person signing the oath or declaration is the legal representative of a deceased inventor, the oath or declaration must state that the person is a legal representative and indicate the citizenship, residency and mailing address of the legal representative.

The declaration submitted on 03 June 2009 identifies Shigeko Okuhara as the legal representative of the deceased inventor Toshiaki Okuhara and states the country of citizenship, residency and mailing address for the legal representative and the deceased inventor. The declaration as submitted meets the requirements for compliance with 37 CFR 1.497(a) and (b). Accordingly, it is appropriate to accord the application status under 37 CFR 1.42.

CONCLUSION

For the above reasons, the request for status under 37 CFR 1.42 is **GRANTED**.

The application will be forwarded to the United States Designated/Elected Office for further processing. The 35 U.S.C. 371(c)(1), (c)(2) and (c)(4) date is 03 June 2009.

/Cynthia M. Kratz/
Cynthia M. Kratz
Attorney Advisor
PCT Legal Office
Office of PCT Legal Administration

Telephone: (571) 272-3286
Facsimile: (571) 273-0459

UNITED STATES PATENT AND TRADEMARK OFFICE

Commissioner for Patents
United States Patent and Trademark Office
P.O. Box 1450
Alexandria, VA 22313-1450
www.uspto.gov

DICKINSON WRIGHT, PLLC
1875 EYE STREET NW, SUITE 1200
WASHINGTON, DC 20006

MAILED

JUL 14 2010

OFFICE OF PETITIONS

In re Application of

Erich GOTTWALD
Application No. 12/373,105
Filed: January 26, 2010
Attorney Docket No. **2006P14014 (NSN)**

DECISION ON PETITION TO WITHDRAW FROM RECORD

This is a decision on the Request to Withdraw as attorney or agent under 37 C.F.R. § 1.36(b) or 37 C.F.R. § 10.40 filed May 31, 2010.

The request is **APPROVED**.

A review of the file record indicates that Kevin R. Spivak of Dickinson Wright, PLLC: (1) does not have power of attorney in this patent application; and (2) has been employed or otherwise engaged in the proceedings in this patent application. In view of the present decision, Kevin R. Spivak and all attorneys associated with Dickinson Wright, PLLC have been withdrawn from the present application and may not prepare or submit papers under 37 C.F.R. § 1.34, or correspond in any manner in this application unless appointed in an acceptable power of attorney under 37 C.F.R. § 1.32(b).

All future communications from the Office will continue to be directed to the first copied address below until otherwise properly notified by the applicant.

Telephone inquires concerning this decision should be directed to the undersigned at 571-272-7253.

/Monica A. Graves/
Petitions Examiner, Office of Petitions

cc: **LERNER GREENBERG STEMER, LLP**
P.O. BOX 2480
HOLLYWOOD, FL 33022-2480

cc: **NOKIA SIEMENS NETWORKS GMBH & CO, KG**
CTO RTP IPR/PATENT ADMINISTRATION
MUNICH, GERMANY 80240

13 NOV 2009

United States Patent and Trademark Office

Commissioner for Patents
United States Patent and Trademark Office
P.O. Box 1450
Alexandria, VA 22313-1450
www.uspto.gov

C. R. Bard, Inc.
Bard Peripheral Vascular, Inc.
1415 W. 3rd Street
P.O. Box 1740
Tempe AZ 85280-1740

In re Application of
Wolf
Application No. 12/373,116
PCT No.: PCT/EP2007/057041
Int. Filing Date: 10 July 2007
Priority Date: 10 July 2006
Att. Docket No.: 568-PDF-06-07 US
For: Tubular Metal Prosthesis
And Method Of Making It

DECISION

The petition to revive under 37 CFR 1.137(b) filed on 09 July 2009 in the above-captioned application is hereby **GRANTED** as follows:

Petitioner states that "the entire delay in filing the required reply from the due date for the required reply until the filing of a grantable petition under 37 CFR 1.137(b) was unintentional." Said statement is accepted in satisfaction of 37 CFR 1.137(b)(3).

A review of the application file reveals that applicants have paid the petition fee. The required reply (in the form of the basic national fee) has been filed. No terminal disclaimer is required. Therefore, the request to revive the application abandoned under 35 U.S.C. 371(d) is granted as to the national stage in the United States of America.

This application is being forwarded to the Office of Patent Application Processing for further processing. The date of the application under 35 U.S.C. 371(c)(1), (2) and (4) is **14 July 2009**.

/George Dombroske/
George Dombroske
PCT Legal Examiner
Office of PCT Legal Administration
Tel: (571) 272-3283
Fax: (571) 273-0459

UNITED STATES PATENT AND TRADEMARK OFFICE

1 2 NOV 2009

Commissioner for Patents
United States Patent and Trademark Office
P.O. Box 1450
Alexandria, VA 22313-1450
www.uspto.gov

Finnegan, Henderson, Farabow, Garrett & Dunner
901 New York Avenue, NW
Washington, D.C. 20001-4413

In re Application of
FUJIYAMA et al. :
Application No.: 12/373,122 :
PCT No.: PCT/JP2007/063449 :
Int. Filing Date: 05 July 2007 :
Priority Date: 12 July 2006 :
Attorney Docket No.: 07481.0105-00000 :
For: METHOD OF DESIGNING GAS-SOLID SEPARATOR :

DECISION ON
PAPERS UNDER 37 CFR 1.42

This decision is issued in response to applicant's declaration filed 29 October 2009, which is being treated as a request under 37 CFR 1.42. No petition fee is due.

BACKGROUND

On 05 July 2007, applicant filed international application PCT/JP2007/063449, which claimed a priority date of 12 July 2006. Pursuant to 37 CFR 1.495, the deadline for payment of the basic national fee in the United States was to expire 30 months from the priority date, 12 January 2009.

On 09 January 2009, applicant filed a transmittal letter for entry into the national stage in the United States accompanied, inter alia, the basic national fee, an English translation of the international application; and a preliminary amendment.

On 03 September 2009, the United States Designated/Elected Office mailed a Notification of Missing Requirements (PCT/DO/EO/905) requiring submission of an oath or declaration in compliance with 37 CFR 1.497 and the surcharge under 37 CFR 1.492(h).

On 29 October 2009, applicant filed a declaration/power of attorney executed by Yuichiro Fujiyama and Akira Uchiura as inventors and Shigeko Okuhara on behalf of deceased inventor, Toshiaki Okuhara.

DISCUSSION

37 CFR 1.42 When the Inventor is Dead, states, in part:

In case of the death of the inventor, the legal representative (executor, administrator, etc.) of the deceased inventor may make the necessary oath or declaration, and apply for and obtain the patent.

The declaration submitted on 29 October 2009 was executed by Shigeko Okuhara as "legal successor" of deceased inventor, Toshiaki Okuhara. However, the declaration does not state that Shigeko Okuhara is the "legal representative" or sole heir of the deceased inventor. Accordingly, the declaration fails to identify the proper relationship under 37 CFR 1.497(b)(2).

CONCLUSION

For the above reasons, the request for status under 37 CFR 1.42 is **REFUSED**.

Applicant is required to provide an oath/declaration in compliance with 37 CFR 1.497(a)-(b) within **TWO (2) MONTHS** from the mail date of this Decision. Failure to respond will result in the abandonment of the application. Any reconsideration request should include a cover letter entitled "Renewed Submission Under 37 CFR 1.42" and must include an acceptable declaration under 37 CFR 1.497 which has been executed by the either the legal representative of the deceased inventor or, if no legal representative has been appointed, all of the heirs of the deceased inventor.

Any further correspondence with respect to this matter may be filed electronically via EFS-Web selecting the document description "Petition for review and processing by the PCT Legal Office" or by mail addressed to Mail Stop PCT, Commissioner for Patents, Office of PCT Legal Administration, P.O. Box 1450, Alexandria, Virginia 22313-1450, with the contents of the letter marked to the attention of the Office of PCT Legal Administration.

Anthony Smith
Attorney-Advisor
Office of PCT Legal Administration
Tel: (571) 272-3298
Fax: (571) 273-0459

UNITED STATES PATENT AND TRADEMARK OFFICE

Commissioner for Patents
United States Patent and Trademark Office
P.O. Box 1450
Alexandria, VA 22313-1450
www.uspto.gov

1 8 FEB 2010

Finnegan, Henderson, Farabow, Garrett & Dunner
901 New York Avenue, NW
Washington, D.C. 20001-4413

In re Application of
FUJIYAMA et al. :
Application No.: 12/373,122 :
PCT No.: PCT/JP2007/063449 :
Int. Filing Date: 05 July 2007 :
Priority Date: 12 July 2006 :
Attorney Docket No.: 07481.0105-00000 :
For: METHOD OF DESIGNING GAS-SOLID SEPARATOR :

DECISION ON
PAPERS UNDER 37 CFR 1.42

In a decision mailed by this Office on 12 November 2009, the declaration filed by applicant on behalf of deceased inventor Toshiaki Okuhara was dismissed for failure to include all the information required under 37 CFR 1.497.

On 12 January 2010, applicant filed a response to the previous communication that was accompanied by a revised declaration. The declaration submitted on 12 January 2010 identifies the deceased inventor and states the deceased inventor's country of citizenship and residence, is signed by Shigeko Okuhara as "Legal Representative," states his/her relationship to the deceased (i.e., Legal Representative), and provides the Legal Representative's country of citizenship and residency. Accordingly, the declaration complies with the requirements of 37 CFR 1.497(b)(2) and 37 CFR 1.42.

The request for status under 37 CFR 1.42 is **GRANTED**.

The application will be forwarded to the National Stage Processing Branch of the Office of PCT Operations for further processing in accordance with this decision.

Anthony Smith
Attorney-Advisor
Office of PCT Legal Administration
Tel: (571) 272-3298
Fax: (571) 273-0459

UNITED STATES PATENT AND TRADEMARK OFFICE

UNITED STATES DEPARTMENT OF COMMERCE
United States Patent and Trademark Office
Address: COMMISSIONER FOR PATENTS
P.O. Box 1450
Alexandria, Virginia 22313-1450
www.uspto.gov

APPLICATION NO.	FILING DATE	FIRST NAMED INVENTOR	ATTORNEY DOCKET NO.	CONFIRMATION NO.
12/373,171		Beom Jin Jeon	2080-3692	8580

35884 7590 06/10/2009
LEE, HONG, DEGERMAN, KANG & WAIMEY
660 S. FIGUEROA STREET
Suite 2300
LOS ANGELES, CA 90017

EXAMINER

ART UNIT	PAPER NUMBER
2617	

NOTIFICATION DATE	DELIVERY MODE
06/10/2009	ELECTRONIC

Please find below and/or attached an Office communication concerning this application or proceeding.

The time period for reply, if any, is set in the attached communication.

Notice of the Office communication was sent electronically on above-indicated "Notification Date" to the following e-mail address(es):

uspto@lhlaw.com
ip.lhlaw@gmail.com
ip.lhlaw@live.com

UNITED STATES PATENT AND TRADEMARK OFFICE

Commissioner for Patents
United States Patent and Trademark Office
P.O. Box 1450
Alexandria, VA 22313-1450
www.uspto.gov

LEE, HONG, DEGERMAN, KANG & WAIMEY
660 S. FIGUEROA STREET
SUITE 2300
LOS ANGELES, CA 90017

In re Application of	:	
JEON, BEOM JIN	:	DECISION ON REQUEST TO
Application No. 12/373,171	:	PARTICIPATE IN PATENT
Filed: January 9, 2009	:	PROSECUTION HIGHWAY
Attorney Docket No. 2080-3692	:	PROGRAM AND PETITION
	:	TO MAKE SPECIAL UNDER
	:	37 CFR 1.102(d)

This is a decision on the request to participate in the Patent Prosecution Highway (PPH) program and the petition under 37 CFR 1.102(d), filed April 22, 2009, to make the above-identified application special.

The request and petition are **DISMISSED**.

A grantable request to participate in the PPH program and petition to make special require:

(1) The U.S. application must validly claim priority under 35 U.S.C. 119(a) to one or more applications filed in the KIPO;
(2) Applicant must submit a copy of the allowable/patentable claim(s) from the KIPO application(s) along with an English translation thereof and a statement that the English translation is accurate;
(3) All the claims in the U.S. application must sufficiently correspond or be amended to sufficiently correspond to the allowable/patentable claim(s) in the KIPO application(s);
(4) Examination of the U.S. application has not begun;
(5) Applicant must submit a copy of all the office actions from each of the KIPO application(s) containing the allowable/patentable claim(s) along with an English translation thereof and a statement that the English translation is accurate;
(6) Applicant must submit an IDS listing the documents cited by the KIPO examiner in the KIPO office action along with copies of documents except U.S. patents or U.S. patent application publications; and
(7) The required petition fee under 37 CFR 1.17(h).

The request to participate in the PPH program and petition is deficient as follows:

Petitioner has not complied with item 3 above in that all the claims in this instant US application must sufficiently correspond or be amended to sufficiently correspond to the allowable claims in the KIPO application 10-2006-0093158. For example, amended claims 27-30 in this instant application do not correspond to allowable claims 6, 7 and 10 of KIPO application.

Applicant is given a time period of **ONE MONTH or THIRTY DAYS**, whichever is longer, from the mailing date of this decision to correct the deficiencies. **NO EXTENSION OF TIME UNDER 37 CFR 1.136 IS PERMITTED.** If the deficiencies are not corrected with the time period given, the application will await action in its regular turn.

Any Response must be submitted by EFS web.

Telephone inquiries concerning this decision should be directed to Doris To at 571-272-7629.

All other inquiries concerning the examination or status of the application should be directed to Patent Application Information Retrieval (PAIR) system.

/Doris To/

Doris To
Quality Assurance Specialist
Technology Center 2600
Communications

UNITED STATES PATENT AND TRADEMARK OFFICE

UNITED STATES DEPARTMENT OF COMMERCE
United States Patent and Trademark Office
Address: COMMISSIONER FOR PATENTS
P.O. Box 1450
Alexandria, Virginia 22313-1450
www.uspto.gov

APPLICATION NO.	FILING DATE	FIRST NAMED INVENTOR	ATTORNEY DOCKET NO.	CONFIRMATION NO.
12/373,171		Beom Jin Jeon	2080-3692	8580

35884 7590 07/20/2009
LEE, HONG, DEGERMAN, KANG & WAIMEY
660 S. FIGUEROA STREET
Suite 2300
LOS ANGELES, CA 90017

EXAMINER

ART UNIT	PAPER NUMBER
2617	

NOTIFICATION DATE	DELIVERY MODE
07/20/2009	ELECTRONIC

Please find below and/or attached an Office communication concerning this application or proceeding.

The time period for reply, if any, is set in the attached communication.

Notice of the Office communication was sent electronically on above-indicated "Notification Date" to the following e-mail address(es):

uspto@lhlaw.com
ip.lhlaw@gmail.com
ip.lhlaw@live.com

UNITED STATES PATENT AND TRADEMARK OFFICE

Commissioner for Patents
United States Patent and Trademark Office
P.O. Box 1450
Alexandria, VA 22313-1450
www.uspto.gov

LEE, HONG, DEGERMAN, KANG & WAIMEY
660 S. FIGUEROA STREET
SUITE 2300
LOS ANGELES, CA 90017

In re Application of	:	
JEON, BEOM JIN	:	DECISION ON REQUEST TO
Application No. 12/373,171	:	PARTICIPATE IN PATENT
Filed: January 9, 2009	:	PROSECUTION HIGHWAY
Attorney Docket No. 8580	:	PROGRAM AND PETITION
	:	TO MAKE SPECIAL UNDER
	:	37 CFR 1.102(d)

This is a decision on the renewed request to participate in the Patent Prosecution Highway (PPH) program and the petition under 37 CFR 1.102(d), filed July 8, 2009 to make the above-identified application special.

The request and petition are **GRANTED**.

A grantable request to participate in the PPH program and petition to make special require:

(1) The U.S. application must validly claim priority under 35 U.S.C. 119(a) to one or more applications filed in the KIPO;
(2) Applicant must submit a copy of the allowable/patentable claim(s) from the KIPO application(s) along with an English translation thereof and a statement that the English translation is accurate;
(3) All the claims in the U.S. application must sufficiently correspond or be amended to sufficiently correspond to the allowable/patentable claim(s) in the KIPO application(s);
(4) Examination of the U.S. application has not begun;
(5) Applicant must submit a copy of all the office actions from each of the KIPO application(s) containing the allowable/patentable claim(s) along with an English translation thereof and a statement that the English translation is accurate;
(6) Applicant must submit an IDS listing the documents cited by the KIPO examiner in the KIPO office action along with copies of documents except U.S. patents or U.S. patent application publications; and
(7) The required petition fee under 37 CFR 1.17(h).

The request to participate in the PPH program and petition now comply with the above requirements. Accordingly, the above-identified application has been accorded "special" status. This application will be examined as "special" once the application has completed all its pre-exam processing.

Telephone inquiries concerning this decision should be directed to Doris To at 571-272-7629.

All other inquiries concerning the examination or status of the application should be directed to Patent Application Information Retrieval (PAIR) system.

The application is being forwarded to the examiner for action on the merits commensurate with this decision.

/Doris To/

Doris To
Quality Assurance Specialist
Technology Center 2600
Communications

D.2

UNITED STATES PATENT AND TRADEMARK OFFICE

UNITED STATES DEPARTMENT OF COMMERCE
United States Patent and Trademark Office
Address: COMMISSIONER FOR PATENTS
P.O. Box 1450
Alexandria, Virginia 22313-1450
www.uspto.gov

APPLICATION NO.	FILING DATE	FIRST NAMED INVENTOR	ATTORNEY DOCKET NO.	CONFIRMATION NO.
12/373,231	01/09/2009	Takashi Inoue	03500.129033.	9024

5514 7590 05/24/2010
FITZPATRICK CELLA HARPER & SCINTO
1290 Avenue of the Americas
NEW YORK, NY 10104-3800

EXAMINER

ART UNIT	PAPER NUMBER
2861	

MAIL DATE	DELIVERY MODE
05/24/2010	PAPER

Please find below and/or attached an Office communication concerning this application or proceeding.

The time period for reply, if any, is set in the attached communication.

UNITED STATES PATENT AND TRADEMARK OFFICE

Commissioner for Patents
United States Patent and Trademark Office
P.O. Box 1450
Alexandria, VA 22313-1450
www.uspto.gov

FITZPATRICK CELLA HARPER & SCINTO
1290 Avenue of the Americas
NEW YORK NY 10104-3800

In re Application of	
INOUE et al.	**: DECISION ON REQUEST TO**
Application No.: 12/373,231	**: PARTICIPATE IN THE PCT PATENT**
Filed: 09 January 2009	**: PROSECUTION HIGHWAY PILOT**
Attorney Docket No.: 03500.129033.	**: PROGRAM AND PETITION**
For: LIQUID DISCHARGE METHOD	**: TO MAKE SPECIAL UNDER**
AND LIQUID DISCHARGE HEAD	**: 37 CFR 1.102(d)**

This is a decision on the request to participate in the PCT Patent Prosecution Highway (PCT-PPH) pilot program and the petition under 37 CFR 1.102(d), filed 29 April 2010, to make the above-identified application special.

The request and petition are **GRANTED**.

Discussion

A grantable request to participate in the PCT-PPH pilot program and petition to make special require:

(1) The U.S. application must disclose an eligible relationship to one or more PCT applications where the ISA or IPEA are the JPO, EPO, or USPTO;

(2) At least one claim in the PCT application has novelty, inventive step, and industrial applicability and must be free of any observations in Box VIII in the latest work product in the international stage or applicant must identify and explain why the claim(s) is/are not subject to the observation in Box VII;

(3) Applicant must submit a copy of the claim(s) from the PCT application(s) that have novelty, inventive step, and industrial applicability along with an English translation thereof and a statement that the English translation is accurate;

(4) All the claims in the U.S. application must sufficiently correspond or be amended to sufficiently correspond to the claim(s) that have novelty, inventive step, and industrial applicability in the PCT application(s);

(5) Examination of the U.S. application has not begun;

(6) Applicant must submit a copy of the latest international work product from the PCT application containing the claim(s) that have novelty, inventive step, and industrial applicability along with an English translation thereof and a statement that the English translation is accurate;

(7) Applicant must submit an IDS listing the documents cited by the PCT examiner in the international work product along with copies of documents except U.S. patents or U.S. patent application publications; and

(8) The required petition fee under 37 CFR 1.17(h).

The request to participate in the PPH pilot program and petition comply with the above requirements. Accordingly, the above-identified application has been accorded "special" status.

Telephone inquiries concerning this decision should be directed to Lee W. Young at 571-272-4549.

All other inquiries concerning the examination or status of the application is accessible in the PAIR system at http://www.uspto.gov/ebc.index.html.

This application will be forwarded to the examiner for action on the merits commensurate with this decision once this application's formality reviews have been completed.

Lee W. Young
TQAS Technology Center 2800 - Semiconductors,
Electrical & Optical Systems & Components

UNITED STATES PATENT AND TRADEMARK OFFICE

Commissioner for Patents
United States Patent and Trademark Office
P.O. Box 1450
Alexandria, VA 22313-1450
www.uspto.gov

TOWNSEND AND TOWNSEND AND CREW LLP
TWO EMBARCADERO CENTER
EIGHTH FLOOR
SAN FRANCISCO, CA 94111-3834

MAILED

JUN 3 0 2010

OFFICE OF PETITIONS

In re Application of	:	
DANA T. AFTAB ET AL.	:	
Application No. 12/373,257	:	DECISION ON PETITION
Filed: October 5, 2009	:	TO WITHDRAW
Attorney Docket No. **EX07-022C-US**	:	FROM RECORD

This is a decision on the Request to Withdraw as attorney or agent of record under 37 CFR § 1.36(b), filed June 3, 2010.

The request is **NOT APPROVED** as moot.

A review of the file record indicates that the power of attorney to attorneys/agents associated with Customer Number 89860 has been revoked by the applicants of the patent application on June 8, 2010. Accordingly, the request to withdraw under 37 CFR § 1.36(b) is moot.

All future communications from the Office will continue to be directed to the below-listed address until otherwise notified by applicant.

Telephone inquires concerning this decision should be directed to the undersigned at 571-272-4584.

JoAnne Burke
Petitions Examiner
Office of Petitions

cc: JONATHAN P. O'BRIEN, PH.D., HONIGMAN MILLER
SCHWARTZ AND COHN LLP
350 EAST MICHIGAN AVENUE, SUITE 300
Kalamazoo MI 49007-3800

Best Available Copy

UNITED STATES PATENT AND TRADEMARK OFFICE

Commissioner for Patents
United States Patent and Trademark Office
P.O. Box 1450
Alexandria, VA 22313-1450
www.uspto.gov

LEE, HONG, DEGERMAN, KANG & WAIMEY
660 S. FIGUEROA STREET
Suite 2300
LOS ANGELES CA 90017

MAIL

APR 01 2009

DIRECTOR'S OFFICE
TECHNOLOGY CENTER 2600

In re Application of	:	
JEON, BEOM JIN	:	DECISION ON REQUEST TO
Application No. 12/373,263	:	PARTICIPATE IN PATENT
Filed: January 09, 2009	:	PROSECUTION HIGHWAY
Attorney Docket No. 2080-3694	:	PROGRAM AND PETITION
	:	TO MAKE SPECIAL UNDER
	:	37 CFR 1.102(d)

This is a decision on the request to participate in the Patent Prosecution Highway (PPH) program and the petition under 37 CFR 1.102(d), filed March 13, 2009, to make the above-identified application special.

The request and petition are **GRANTED**.

A grantable request to participate in the PPH program and petition to make special require:

(1) The U.S. application must validly claim priority under 35 U.S.C. 119(a) to one or more applications filed in the KIPO;
(2) Applicant must submit a copy of the allowable/patentable claim(s) from the KIPO application(s) along with an English translation thereof and a statement that the English translation is accurate;
(3) All the claims in the U.S. application must sufficiently correspond or be amended to sufficiently correspond to the allowable/patentable claim(s) in the KIPO application(s);
(4) Examination of the U.S. application has not begun;
(5) Applicant must submit a copy of all the office actions from each of the KIPO application(s) containing the allowable/patentable claim(s) along with an English translation thereof and a statement that the English translation is accurate;
(6) Applicant must submit an IDS listing the documents cited by the KIPO examiner in the KIPO office action along with copies of documents except U.S. patents or U.S. patent application publications; and
(7) The required petition fee under 37 CFR 1.17(h).

The request to participate in the PPH program and petition comply with the above requirements. Accordingly, the above-identified application has been accorded "special" status.

Best Available Copy

Telephone inquiries concerning this decision should be directed to Kenneth Wieder at 571-272-2986.

All other inquiries concerning the examination or status of the application should be directed to Patent Application Information Retrieval (PAIR) system.

The application is being forwarded to the examiner for action on the merits commensurate with this decision.

Kenneth Wieder
Quality Assurance Specialist
Technology Center 2600
Communications

UNITED STATES PATENT AND TRADEMARK OFFICE

UNITED STATES DEPARTMENT OF COMMERCE
United States Patent and Trademark Office
Address: COMMISSIONER FOR PATENTS
P.O. Box 1450
Alexandria, Virginia 22313-1450
www.uspto.gov

APPLICATION NO.	FILING DATE	FIRST NAMED INVENTOR	ATTORNEY DOCKET NO.	CONFIRMATION NO.
12/373,271	01/09/2009	Taek Soo Kim	2080-3695	9250

35884 7590 09/01/2009
LEE, HONG, DEGERMAN, KANG & WAIMEY
660 S. FIGUEROA STREET
Suite 2300
LOS ANGELES, CA 90017

EXAMINER

ART UNIT	PAPER NUMBER
2423	

NOTIFICATION DATE	DELIVERY MODE
09/01/2009	ELECTRONIC

Please find below and/or attached an Office communication concerning this application or proceeding.

The time period for reply, if any, is set in the attached communication.

Notice of the Office communication was sent electronically on above-indicated "Notification Date" to the following e-mail address(es):

uspto@lhlaw.com
ip.lhlaw@gmail.com
ip.lhlaw@live.com

UNITED STATES PATENT AND TRADEMARK OFFICE

Commissioner for Patents
United States Patent and Trademark Office
P.O. Box 1450
Alexandria, VA 22313-1450
www.uspto.gov

LEE, HONG, DEGERMAN, KANG & WAIMEY
660 S. FIGUEROA STREET
Suite 2300
LOS ANGELES CA 90017

In re Application of: Taek Soo Kim, et al.
Application No. 12/373,271
Filed: January 9, 2009
For: **METHOD OF TRANSMITTING LINK-ADAPTIVE TRANSMISSION OF DATA STREAM IN A MOBILE COMMUNICATION SYSTEM**

PRIORITY IN WIRELESS COMMUNICATION SYSTEM

DECISION ON REQUEST TO PARTICIPATE IN PATENT PROSECUTION HIGHWAY PROGRAM AND PETITION TO MAKE SPECIAL UNDER 37 CFR 1.102(d)

MAILED

AUG 3 1 2009

DIRECTOR OFFICE
TECHNOLOGY CENTER 2400

This is a decision on the request to participate in the Patent Prosecution Highway (PPH) program and the petition under 37 CFR 1.102(d), filed April 13, 2009, to make the above-identified application special.

The petition is **DISMISSED.**

A grantable request to participate in the PPH program and petition to make special require:

(1) The U.S. application must validly claim priority under 35 U.S.C. 119(a) to one or more applications filed in the KIPO;

(2) Applicant must submit a copy of the allowable/patentable claim(s) from the KIPO application(s) along with an English translation thereof and a statement that the English translation is accurate;

(3) All the claims in the U.S. application must sufficiently correspond or be amended to sufficiently correspond to the allowable/patentable claim(s) in the KIPO application(s);

(4) Examination of the U.S. application has not begun;

(5) Applicant must submit a copy of all the office actions from each of the KIPO application(s) containing the allowable/patentable claim(s) along with an English translation thereof and a statement that the English translation is accurate;

(6) Applicant must submit an IDS listing the documents cited by the KIPO examiner in the KIPO office action along with copies of documents except U.S. patents or U.S.

patent application publications; and

(7) The required petition fee under 37 CFR 1.17(h).

The request to participate in the PPH program and petition failed item (3) above, because claims 26-30 of the US application do not sufficiently correspond to allowed claims 12-23 of the KIPO patent application. Claims 26-30 of the US application are directed to a device while claims 12-23 of the KIPO application are directed to a method.

Accordingly, the Petition is **DISMISSED**.

Applicant is given a time period of ONE MONTH or THIRTY DAYS, whichever is longer, to correct the deficiencies. NO EXTENSION OF TIME UNDER 37 CFR 1.136 IS PERMITTED.

If the deficiencies are not corrected with the time period given, the application will await action in its regular turn.

Responses must be submitted by EFS-Web using the document description "Petition to make special under Pat Pros Hwy".

Telephone inquiries concerning this decision should be directed to Hassan Kizou at 571-272-3088

All other inquiries concerning the examination or status of the application is accessible in the PAIR system at http://www.uspto.gov/ebc/index.html.

Hassan Kizou
Quality Assurance Specialist, Technology Center 2400

UNITED STATES PATENT AND TRADEMARK OFFICE

UNITED STATES DEPARTMENT OF COMMERCE
United States Patent and Trademark Office
Address: COMMISSIONER FOR PATENTS
P.O. Box 1450
Alexandria, Virginia 22313-1450
www.uspto.gov

APPLICATION NO.	FILING DATE	FIRST NAMED INVENTOR	ATTORNEY DOCKET NO.	CONFIRMATION NO.
12/373,271	01/09/2009	Tack Soo Kim	2080-3695	9250

35884 7590 09/09/2009
LEE, HONG, DEGERMAN, KANG & WAIMEY
660 S. FIGUEROA STREET
Suite 2300
LOS ANGELES, CA 90017

EXAMINER

ART UNIT	PAPER NUMBER
2423	

NOTIFICATION DATE	DELIVERY MODE
09/09/2009	ELECTRONIC

Please find below and/or attached an Office communication concerning this application or proceeding.

The time period for reply, if any, is set in the attached communication.

Notice of the Office communication was sent electronically on above-indicated "Notification Date" to the following e-mail address(es):

uspto@lhlaw.com
ip.lhlaw@gmail.com
ip.lhlaw@live.com

UNITED STATES PATENT AND TRADEMARK OFFICE

Commissioner for Patents
United States Patent and Trademark Office
P.O. Box 1450
Alexandria, VA 22313-1450
www.uspto.gov

LEE, HONG, DEGERMAN, KANG & WAIMEY
660 S. FIGUEROA STREET
Suite 2300
LOS ANGELES CA 90017

In re Application of: Taek Soo Kim, et al.
Application No. 12/373,271
Filed: January 9, 2009
For: **METHOD OF TRANSMITTING LINK-ADAPTIVE TRANSMISSION OF DATA STREAM IN A MOBILE COMMUNICATION SYSTEM**

PRIORITY IN WIRELESS COMMUNICATION SYSTEM

DECISION ON REQUEST TO PARTICIPATE IN PATENT PROSECUTION HIGHWAY PROGRAM AND PETITION TO MAKE SPECIAL UNDER 37 CFR 1.102(d)

MAILED

SEP 09 2009

DIRECTOR OFFICE
TECHNOLOGY CENTER 2400

This is a decision on the renewed request to participate in the Patent Prosecution Highway (PPH) program and the petition under 37 CFR 1.102(d), filed September 4, 2009, to make the above-identified application special.

The petition is **GRANTED.**

A grantable request to participate in the PPH program and petition to make special require:

(1) The U.S. application must validly claim priority under 35 U.S.C. 119(a) to one or more applications filed in the KIPO;

(2) Applicant must submit a copy of the allowable/patentable claim(s) from the KIPO application(s) along with an English translation thereof and a statement that the English translation is accurate;

(3) All the claims in the U.S. application must sufficiently correspond or be amended to sufficiently correspond to the allowable/patentable claim(s) in the KIPO application(s);

(4) Examination of the U.S. application has not begun;

(5) Applicant must submit a copy of all the office actions from each of the KIPO application(s) containing the allowable/patentable claim(s) along with an English translation thereof and a statement that the English translation is accurate;

(6) Applicant must submit an IDS listing the documents cited by the KIPO examiner in the KIPO office action along with copies of documents except U.S. patents or U.S.

patent application publications; and

(7) The required petition fee under 37 CFR 1.17(h).

The original request to participate in the PPH program and petition failed item (3) above, because claims 26-30 of the US application do not sufficiently correspond to allowed claims 12-23 of the KIPO patent application. Claims 26-30 of the US application are directed to a device while claims 12-23 of the KIPO application are directed to a method. The preliminary amendment filed with the renewed request cancelled claims 26-30. The request to participate in the PPH program and petition are now found to comply with the above requirements. Accordingly, the above-identified application has been accorded "special" status.

Telephone inquiries concerning this decision should be directed to Hassan Kizou at 571-272-3088

All other inquiries concerning the examination or status of the application is accessible in the PAIR system at http://www.uspto.gov/ebc/index.html.

The application is being forwarded to the examiner for action on the merits commensurate with this decision.

Hassan Kizou
Quality Assurance Specialist, Technology Center 2400

UNITED STATES PATENT AND TRADEMARK OFFICE

13 JUL 2009

Commissioner for Patents
United States Patent and Trademark Office
P.O. Box 1450
Alexandria, VA 22313-1450
www.uspto.gov

43850
MORGAN, LEWIS & BOCKIUS LLP
One Market, Spear Street Tower
Suite 2800
San Francisco, CA 94105

In re Application of RAYMOND *et al* U.S. Application No.: 12/373,275 PCT No.: PCT/US2007/073185 Int. Filing Date: 10 July 2007 Priority Date: 10 July 2006 Docket No.: 061818-02-5043-US For: LUMINESCENT 1-HYDROXY 2-PYRIDINONE CHELATES OF LANTHANIDES	**DECISION ON PETITION UNDER 37 CFR 1.137(b)**

Applicants' petition to revive under 37 CFR 1.137(b) filed on 15 May 2009 is hereby **GRANTED** as follows:

The Basic National fee and the petition fee for a small entity have been paid. Applicants made the required statement pursuant to 37 CFR 1.137(b)(3). A terminal disclaimer is not required.

Accordingly, all requirements under 37 CFR 1.137(b) have been satisfied.

This application is being forwarded to the United States Designated/Elected Office for further processing.

James Thomson

James Thomson
Attorney Advisor
Office of PCT Legal Administration

Tel.: (571) 272-3302

1 1 MAR 2009

United States Patent and Trademark Office

Commissioner for Patents
United States Patent and Trademark Office
P.O. Box 1450
Alexandria, VA 22313-1450
www.uspto.gov

SCHIFF HARDIN, LLP
PATENT DEPARTMENT
6600 SEARS TOWER
CHICAGO IL 60606-6473

In re Application of	:	
Ohlander et al.	:	
Application No. 12/373,356	:	
PCT No.: PCT/SE2007/000165	:	
Int. Filing Date: 22 February 2007	:	DECISION
Priority Date: 28 February 2006	:	
Att. Docket No.: P08,0365 (27009-0280)	:	
For: Medical Device And Method For	:	
Monitoring Hematocrit And SVO2	:	

The petition to revive under 37 CFR 1.137(b) filed on 12 January 2009 in the above-captioned application is hereby **GRANTED** as follows:

Petitioner states that "the entire delay in filing the required reply from the due date for the required reply until the filing of a grantable petition under 37 CFR 1.137(b) was unintentional." Said statement is being accepted in satisfaction of 37 CFR 1.137(b)(3).

A review of the application file reveals that applicant has filed the required reply in the form of the basic national fee. The petition fee has been paid. Therefore, the request to revive the application abandoned under 35 U.S.C. 371(d) is granted as to the national stage in the United States of America.

Inspection of the declaration filed on 12 January 2009 reveals that it is defective because it is directed toward the wrong international application ("PCT/SE2006/000165"). The declaration also shows un-initialed alterations to the data pertaining to inventor Hietanen. In addition, it appears that the declaration has been assembled by aggregating separately signed sheets to arrive at the document presented; it appears that complete copies of the declarations as actually signed have not been presented. MPEP 201.03 explains (in part) that

> While each inventor need not execute the same oath or declaration, each oath or declaration executed by an inventor must contain a complete listing of all inventors so as to clearly indicate what each inventor believes to be the appropriate inventive entity. Where individual declarations are executed, they must be submitted as individual declarations rather than combined into one declaration. For example, where the inventive entity is A and B, a declaration may not be executed only by A naming only A as the inventor and a different declaration may not be executed only by B naming only B as the inventor, which two declarations are then combined into one declaration with a first page of boiler plate, a second page with A's signature, and a second page with B's signature (so that it appears that the declaration was executed with the entire inventive entity appearing in the declaration when it did not).

In view of this policy, it would not be appropriate to accept this declaration for purposes of compliance with 37 CFR 1.497(a) and (b).

This application is being forwarded to the Office of Patent Application Processing for further processing, including the preparation and mailing of a Notification of Missing Requirements (Form PCT/DO/EO/905) requiring the submission of an oath or declaration compliant with 37 CFR 1.497(a) and (b) and the surcharge under 37 CFR 1.492(h).

/George Dombroske/
George Dombroske
PCT Legal Examiner
Office of PCT Legal Administration
Tel: (571) 272-3283
Fax: (571) 273-0459

UNITED STATES PATENT AND TRADEMARK OFFICE

17 NOV 2009

Commissioner for Patents
United States Patent and Trademark Office
P.O. Box 1450
Alexandria, VA 22313-1450
www.uspto.gov

GREER, BURNS & CRAIN
300 S WACKER DR
25TH FLOOR
CHICAGO IL 60606

In re Application of:	:	
HAGEDORN, Alexander, et al.	:	
U.S. Application No.: 12/373,364	:	DECISION ON PETITION
PCT No.: PCT/EP2007/006259	:	
International Filing Date: 13 July 2007	:	
Priority Date: 13 July 2006	:	
Atty Docket No.: 4442.82811	:	
For: ROLLER PRESS, PARTICULARLY	:	
FOR INTERPARTICLE	:	
COMMINUTION	:	

The petition for revival under 37 CFR 1.137(b) filed 02 November 2009 in the above-captioned application is hereby **GRANTED** as follows:

The present application became abandoned with respect to the United States at midnight on 13 January 2009 based on applicant's failure to pay the U.S. basic national fee prior to the expiration of thirty months from the priority date.[1]

The present petition for revival was accompanied by payment of the petition fee and the "required reply" in the form of payment of the basic national fee. In addition, the petition includes a statement that "the entire delay in filing the required reply from the due date for the required reply until the filing of a grantable petition under 37 CFR 1.137(b) was unintentional," as well as a separate statement discussing the circumstances of the delay. These statements satisfy the requirement of 37 CFR 1.137(b)(3).

Based on the above, the requirements of 37 CFR 1.137(b) have been satisfied. Accordingly, the request to revive the international application with respect to the United States is appropriately granted.

It is noted that applicants' 12 January 2009 submission included an English translation of the international application.

In addition, on 11 November 2009, applicants filed an executed declaration in compliance with 37 CFR 1.497.

[1] Applicant filed materials to initiate the present national stage application on 12 January 2009; however, as evidenced by the Electronic Acknowledgement Receipt, such submission was made without payment of fees.

This application is being referred to the National Stage Processing Division of the Office of PCT Operations for further processing in accordance with this decision. The date under 35 U.S.C. 371(c)(1), (c)(2), and (c)(4) is 11 November 2009.

Richard M. Ross
Attorney Advisor
Office of PCT Legal Administration
Telephone: (571) 272-3296
Facsimile: (571) 273-0459

UNITED STATES PATENT AND TRADEMARK OFFICE

Commissioner for Patents
United States Patent and Trademark Office
P.O. Box 1450
Alexandria, VA 22313-1450
www.uspto.gov

In re Application of
Leonid Shturman

Application No. 12373418

Filed:

Attorney Docket No. 1059.001

:DECISION ON PETITION TO MAKE SPECIAL
:UNDER 37 CFR 1.102(c)(1)

This is a decision on the electronic petition under 37 CFR 1.102 (c)(1), filed 12-JAN-2009 to make the above-identified application special based on applicant's age as set forth in MPEP § 708.02, Section IV.

The petition is **GRANTED**.

A grantable petition to make an application special under 37 CFR 1.102(c)(1), MPEP § 708.02, Section IV: Applicant's Age must include a statement by applicant or a registered practitioner having evidence that applicant is at least 65 years of age. No fee is required.

Accordingly, the above-identified application has been accorded "special" status and will be taken up for action by the examiner upon the completion of all pre-examination processing.

Telephone inquiries concerning this electronic decision should be directed to the Electronic Business Center at 866-217-9197.

All other inquiries concerning either the examination or status of the application should be directed to the Technology Center.

UNITED STATES PATENT AND TRADEMARK OFFICE

Commissioner for Patents
United States Patent and Trademark Office
P.O. Box 1450
Alexandria, VA 22313-1450
www.uspto.gov

In re Application of
Leonid Shturman

Application No. 12373445

Filed:

Attorney Docket No. 1059.002

:DECISION ON PETITION TO MAKE SPECIAL
:UNDER 37 CFR 1.102(c)(1)

This is a decision on the electronic petition under 37 CFR 1.102 (c)(1), filed 12-JAN-2009 to make the above-identified application special based on applicant's age as set forth in MPEP § 708.02, Section IV.

The petition is **GRANTED**.

A grantable petition to make an application special under 37 CFR 1.102(c)(1), MPEP § 708.02, Section IV: Applicant's Age must include a statement by applicant or a registered practitioner having evidence that applicant is at least 65 years of age. No fee is required.

Accordingly, the above-identified application has been accorded "special" status and will be taken up for action by the examiner upon the completion of all pre-examination processing.

Telephone inquiries concerning this electronic decision should be directed to the Electronic Business Center at 866-217-9197.

All other inquiries concerning either the examination or status of the application should be directed to the Technology Center.

UNITED STATES PATENT AND TRADEMARK OFFICE

Commissioner for Patents
United States Patent and Trademark Office
P.O. Box 1450
Alexandria, VA 22313-1450
www.uspto.gov

In re Application of
Leonid Shturman

Application No. 12373461

Filed:

Attorney Docket No. 1059.003

:DECISION ON PETITION TO MAKE SPECIAL
:UNDER 37 CFR 1.102(c)(1)

This is a decision on the electronic petition under 37 CFR 1.102 (c)(1), filed 12-JAN-2009 to make the above-identified application special based on applicant's age as set forth in MPEP § 708.02, Section IV.

The petition is **GRANTED**.

A grantable petition to make an application special under 37 CFR 1.102(c)(1), MPEP § 708.02, Section IV: Applicant's Age must include a statement by applicant or a registered practitioner having evidence that applicant is at least 65 years of age. No fee is required.

Accordingly, the above-identified application has been accorded "special" status and will be taken up for action by the examiner upon the completion of all pre-examination processing.

Telephone inquiries concerning this electronic decision should be directed to the Electronic Business Center at 866-217-9197.

All other inquiries concerning either the examination or status of the application should be directed to the Technology Center.

UNITED STATES PATENT AND TRADEMARK OFFICE

Commissioner for Patents
United States Patent and Trademark Office
P.O. Box 1450
Alexandria, VA 22313-1450
www.uspto.gov

In re Application of
Leonid Shturman

Application No. 12373477

Filed:

Attorney Docket No. 1059.004

:DECISION ON PETITION TO MAKE SPECIAL
:UNDER 37 CFR 1.102(c)(1)

This is a decision on the electronic petition under 37 CFR 1.102 (c)(1), filed 12-JAN-2009 to make the above-identified application special based on applicant's age as set forth in MPEP § 708.02, Section IV.

The petition is **GRANTED**.

A grantable petition to make an application special under 37 CFR 1.102(c)(1), MPEP § 708.02, Section IV: Applicant's Age must include a statement by applicant or a registered practitioner having evidence that applicant is at least 65 years of age. No fee is required.

Accordingly, the above-identified application has been accorded "special" status and will be taken up for action by the examiner upon the completion of all pre-examination processing.

Telephone inquiries concerning this electronic decision should be directed to the Electronic Business Center at 866-217-9197.

All other inquiries concerning either the examination or status of the application should be directed to the Technology Center.

UNITED STATES PATENT AND TRADEMARK OFFICE

Commissioner for Patents
United States Patent and Trademark Office
P.O. Box 1450
Alexandria, VA 22313-1450
www.uspto.gov

MAIL

JAN 22 2010

DIRECTOR'S OFFICE
TECHNOLOGY CENTER 2600

KNOBBE MARTENS OLSON & BEAR LLP
2040 MAIN STREET
FOURTEENTH FLOOR
IRVINE CA 92614

In re Application of RICE, PATRICK JEREMY Application No. 12/373,506 Filed: January 12, 2009 Attorney Docket No. DUMME95.001APC	DECISION ON REQUEST TO PARTICIPATE IN PATENT PROSECUTION HIGHWAY PILOT PROGRAM AND PETITION TO MAKE SPECIAL UNDER 37 CFR 1.102(d)

This is a decision on the request to participate in the Patent Prosecution Highway (PPH) pilot program and the petition under 37 CFR 1.102(d), filed December 14, 2009.

The request and petition are **GRANTED**.

A grantable request to participate in the PPH pilot program and petition to make special require:

(1) The U.S. application must validly claim priority under 35 U.S.C. 119(a) to one or more applications filed in the IPAU;
(2) Applicant must submit a copy of the allowable/patentable claim(s) from the IPAU application(s);
(3) All the claims in the U.S. application must sufficiently correspond or be amended to sufficiently correspond to the allowable/patentable claim(s) in the IPAU application(s);
(4) Examination of the U.S. application has not begun;
(5) Applicant must submit a copy of all the office actions from each of the IPAU application(s) containing the allowable/patentable claim(s);
(6) Applicant must submit an IDS listing the documents cited by the IPAU examiner in the IPAU office action along with copies of documents except U.S. patents or U.S. patent application publications; and
(7) The required petition fee under 37 CFR 1.17(h).

The request to participate in the PPH program and petition comply with the above requirements. Accordingly, the above-identified application has been accorded "special" status.

Telephone inquiries concerning this decision should be directed to Ken Wieder at 571-272-2968.

All other inquiries concerning the examination or status of the application should be directed to Patent Application Information Retrieval (PAIR) system.

Kenneth A. Wieder
Quality Assurance Specialist
Technology Center 2600
Communications

2 6 MAR 2009

UNITED STATES PATENT AND TRADEMARK OFFICE

Commissioner for Patents
United States Patent and Trademark Office
P.O. Box 1450
Alexandria, VA 22313-1450
www.uspto.gov

FITCH EVEN TABIN AND FLANNERY
120 SOUTH LASALLE STREET
SUITE 1600
CHICAGO IL 60603-3406

In re Application of	:	
RISCHMUELLER et al.	:	
Application No.: 12/373,519	:	DECISION
PCT No.: PCT/AU2007/000880	:	
Int. Filing Date: 27 June 2007	:	
Priority Date: 27 June 2006	:	
Attorney Docket No.: 8089/93871	:	
For: A MODULAR DECKING SYSTEM AND AN	:	
IMPROVED TREAD AND BEARER LOCATING	:	
SYSTEM THEREFOR	:	

This decision is in response to applicants' submission filed 27 January 2009 in the United States Patent and Trademark Office (USPTO).

BACKGROUND

On 27 June 2007, applicant filed international application PCT/AU2007/000880 which designated the U.S. and claimed a priority date of 27 June 2006. A copy of the international application was communicated to the USPTO from the International Bureau on 03 January 2008. The thirty-month period for paying the basic national fee in the United States expired at midnight on 29 December 2008 (27 December 2008 being a Saturday).

On 27 January 2009, applicant filed a transmittal letter for entry into the national stage in the United States, which was accompanied by, *inter alia*, the Basic National Fee and a petition under 37 CFR 1.137(b) to revive the application.

DISCUSSION

A petition to revive the present application under 37 CFR 1.137(b) must include:

(1) The required reply;
(2) The petition fee;

(3) A statement that the entire delay in filing the required reply from the due date for the reply until the filing of a grantable petition was unintentional.

As to item (1), applicant submitted the basic national fee on 27 January 2009.

As to item (2), applicant submitted the petition fee on 27 January 2009.

As to item (3), the required statement has been provided.

A review of the application file reveals that, with the filing of the present petition and accompanying papers, a proper response has been submitted and all of the requirements of 37 CFR 1.137(b) for revival have been satisfied and revival is therefore appropriate.

CONCLUSION

The petition under 37 CFR 1.137(b) is **GRANTED** for the reasons set forth above.

This application is being forwarded to the National Stage Processing Branch of the Office of PCT Operations to continue national stage processing of the application including preparing and mailing a NOTIFICATION OF MISSING REQUIREMENTS (Form PCT/DO/EO/905) requiring an executed oath or declaration of the inventor in compliance with 37 CFR 1.497(a)-(b) and the surcharge under 37 CFR 1.492(h) for filing any of the search fee, the examination fee, or the oath or declaration after the date of the commencement of the national stage.

/Daniel Stemmer/

Daniel Stemmer
Legal Examiner
PCT Legal Affairs
Office of Patent Cooperation Treaty
Legal Administration
Telephone: (571) 272-3301
Facsimile: (571) 273-0459

UNITED STATES PATENT AND TRADEMARK OFFICE

Commissioner for Patents
United States Patent and Trademark Office
P.O. Box 1450
Alexandria, VA 22313-1450
www.uspto.gov

27 OCT 2009

Myers Andras Sherman LLP
19900 MacArthur Blvd.
Suite 1150
Irvine CA 92612

In re Application of	:	
ZULBER, Kurt	:	
Application No.: 12/373,522	:	DECISION ON PETITION
PCT No.: PCT/EP2007/006223	:	UNDER 37 CFR 1.137(b)
Int. Filing Date: 13 July 2007	:	
Priority Date: 13 July 2006	:	
Attorney Docket No.: FIE1.PAU.05.US	:	
For: DENTAL FURNACE, AND METHOD FOR CONTROLLING THE POSITION OF AN ASSOCIATED CLOSING PLATE	:	

The petition to revive under 37 CFR 1.137(b) filed 06 October 2009 in the above-captioned application is hereby **GRANTED** as follows:

Applicant's statement that "the entire delay in filing the required reply from the due date for the reply until the filing of a grantable petition under 37 CFR 1.137(b) was unintentional" meets the requirements of 37 CFR 1.137(b)(3).

A review of the application file reveals that applicant has submitted the basic national fee and the requirements of 37 CFR 1.137(b) have been satisfied. Therefore, the request to revive the application abandoned under 35 U.S.C. 371(d) is granted as to the National stage in the United States of America.

This application is being returned to the United States Designated/Elected Office for processing in accordance with this decision.

Anthony Smith
Attorney-Advisor
Office of PCT Legal Administration
Tel: (571) 272-3298

UNITED STATES PATENT AND TRADEMARK OFFICE

Commissioner for Patents
United States Patent and Trademark Office
P.O. Box 1450
Alexandria, VA 22313-1450
www.uspto.gov

WHITEFORD, TAYLOR & PRESTON, LLP
ATTN: GREGORY M STONE
SEVEN SAINT PAUL STREET
BALTIMORE MD 21202-1626

MAILED

MAY 12 2010

OFFICE OF PETITIONS

In re Application of	:	
Giuseppe De'Longhi	:	
Application No. 12/373,596	:	DECISION ON PETITION
Filed: January 13, 2009	:	TO MAKE SPECIAL UNDER
Attorney Docket No. 084153/00001	:	37 CFR 1.102(c)(1)
	:	

This is a decision on the petition under 37 CFR 1.102(c)(1), filed March 16, 2010, to make the above-identified application special based on applicant's age as set forth in M.P.E.P. § 708.02, Section IV.

The petition is **GRANTED**.

A grantable petition to make an application special under 37 CFR 1.102(c)(1) and MPEP § 708.02, Section IV: Applicant's Age must be accompanied by evidence showing that at least one of the applicants is 65 years of age, or more, such as a birth certificate or a statement by applicant. No fee is required

The instant petition includes a statement by an attorney on behalf of the inventor attesting to his age. The above-identified application has been accorded "special" status.

Telephone inquiries concerning this decision should be directed to Kimberly Inabinet at 571-272-4618.

All other inquiries concerning either the examination or status of the application should be directed to the Technology Center.

The application is being forwarded to the Technology Center Art Unit 1794 for action on the merits commensurate with this decision.

/Kimberly Inabinet/

Kimberly Inabinet
Petitions Examiner
Office of Petitions

UNITED STATES PATENT AND TRADEMARK OFFICE

0 4 SEP 2009

Commissioner for Patents
United States Patent and Trademark Office
P.O. Box 1450
Alexandria, VA 22313-1450
www.uspto.gov

DARBY & DARBY P.C.
P.O. BOX 770
Church Street Station
New York NY 10008-0770

In re Application of	:	
HASHIMOTO (Deceased)	:	DECISION ON
Application No.: 12/373,613	:	
PCT No.: PCT/JP07/62388	:	REQUEST
Int. Filing Date: 20 June 2007	:	
Priority Date: 13 July 2006	:	UNDER 37 CFR 1.42
Attorney Docket no.: 05677/0211005-US0	:	
For: METAL COMPOSITE MATERIAL AND	:	
PROCESS FOR PRODUCING METAL	:	
COMPOSITE MATERIAL		

This is a decision on applicant's request under 37 CFR 1.42 along with an executed declaration filed in the United States Patent and Trademark Office (USPTO) on 13 January 2009.

BACKGROUND

On 13 January 2009, applicant filed a request for entry into the national stage in the United States of America under 35 U.S.C. § 371 with, *inter alia*, the requisite basic national fee, application data sheet and an executed declaration. The declaration was executed by the legal representative of the deceased inventor and by the joint inventors.

DISCUSSION

To meet the requirements for compliance with 37 CFR 1.497(a) and (b), the declaration must state the relationship and the country of citizenship for both the deceased inventor and the legal representative. In addition, the declaration must provide the residency and mailing address for both the deceased inventor and the legal representative.

The declaration (PTO/SB/106) submitted on 13 January 2009 identifies Kazuko Hashimoto as the legal representative of the deceased inventor Masaoki Hashimoto and states the relationship, country of citizenship, residency and mailing address for the legal representative. The declaration meets the requirements for compliance with 37 CFR 1.497(a) and (b). Accordingly, it is appropriate, at this time, to accord the application status under 37 CFR 1.42.

CONCLUSION

For the above reasons, the request for status under 37 CFR 1.42 is **GRANTED.**

The declaration executed by the legal representative for deceased inventor Masaoki Hashimoto and the joint inventors submitted on 13 January 2009 is accepted as a proper declaration under 37 CFR 1.497(a) and (b).

The application will be forwarded to the United States Designated/Elected Office for further processing. The 35 U.S.C. 371(c)(1), (c)(2) and (c)(4) date is 13 January 2009.

Cynthia M. Kratz
Attorney Advisor
PCT Legal Office
Office of PCT Legal Administration

Telephone: (571) 272-3286
Facsimile: (571) 273-0459

UNITED STATES PATENT AND TRADEMARK OFFICE

Commissioner for Patents
United States Patent and Trademark Office
P.O. Box 1450
Alexandria, VA 22313-1450
www.uspto.gov

DICKINSON WRIGHT, PLLC
1875 EYE STREET NW, SUITE 1200
WASHINGTON, DC 20006

MAILED

JUL 14 2010

OFFICE OF PETITIONS

In re Application of

Fabian HAUSKE, et *al.*
Application No. 12/373,614
Filed: January 26, 2010
Attorney Docket No. **2006P11009 (NSN)**

DECISION ON PETITION TO WITHDRAW FROM RECORD

This is a decision on the Request to Withdraw as attorney or agent under 37 C.F.R. § 1.36(b) or 37 C.F.R. § 10.40 filed May 31, 2010.

The request is **APPROVED**.

A review of the file record indicates that Kevin R. Spivak of Dickinson Wright, PLLC: (1) does not have power of attorney in this patent application; and (2) has been employed or otherwise engaged in the proceedings in this patent application. In view of the present decision, Kevin R. Spivak and all attorneys associated with Dickinson Wright, PLLC have been withdrawn from the present application and may not prepare or submit papers under 37 C.F.R. § 1.34, or correspond in any manner in this application unless appointed in an acceptable power of attorney under 37 C.F.R. § 1.32(b).

All future communications from the Office will continue to be directed to the first copied address below until otherwise properly notified by the applicant.

Telephone inquires concerning this decision should be directed to the undersigned at 571-272-7253.

/Monica A. Graves/
Petitions Examiner, Office of Petitions

cc: **LERNER GREENBERG STEMER, LLP**
P.O. BOX 2480
HOLLYWOOD, FL 33022-2480

cc: **NOKIA SIEMENS NETWORKS GMBH & CO, KG**
CTO RTP IPR/PATENT ADMINISTRATION
MUNICH, GERMANY 80240

UNITED STATES PATENT AND TRADEMARK OFFICE

Commissioner for Patents
United States Patent and Trademark Office
P.O. Box 1450
Alexandria, VA 22313-1450
www.uspto.gov

1 1 MAR 2010

David S. Resnick
Nixon Peabody LLP
100 Summer Street
Boston, MA 02110-2131

In re Application of WINE, William Abraham Application No.: 12/373,632 PCT No.: PCT/CA2007/001272 Int. Filing Date: 13 July 2007 Priority Date: 14 July 2006 Attorney Docket No.: 701826-064500-US For: TRANSDERMAL FORMULATIONS OF SYNTHETIC CANNABINOIDS AND NANO COLLOIDAL SILICA	:	DECISION REGARDING SUBMISSION UNDER 37 CFR 1.42

This decision is issued in response to the declaration filed 04 January 2010 which is being treated as a submission under 37 CFR 1.42. No petition fee is required.

BACKGROUND

On 13 July 2007, applicant filed international application PCT/CA2007/001272 which claimed a priority date of 14 July 2006. On 17 January 2008, a copy of the international application was communicated to the United States Patent And Trademark Office ("USPTO") by the International Bureau ("IB"). The deadline for payment of the basic national fee was 14 January 2009 (thirty months from the priority date).

On 13 January 2009, applicant filed a transmittal letter for entry into the national stage in the United States accompanied by, among other materials, payment of the basic national fee; a copy of the international application; a preliminary amendment; and an application data.

On 01 September 2009, the United Stated Designated/Elected Office mailed a Notification of Missing Requirements under 35 U.S.C. 371 (Form PCT/DO/EO/905) indicating that an oath or declaration in compliance with 37 CFR 1.497(a) and (b) must be filed. The notification set a two-month time limit in which to respond.

On 04 January 2010, applicant filed the present petition and a declaration executed by Harvey Wine, on behalf of deceased inventor, William Abraham Wine.

DISCUSSION

37 CFR 1.42 *When the Inventor is Dead*, states, in part:

> In case of the death of the inventor, the legal representative (executor, administrator, etc.) of the deceased inventor may make the necessary oath or declaration, and apply for and obtain the patent.

37 CFR 1.497(b)(2) states the following:

> (2) If the person making the oath or declaration or any supplemental oath or declaration is not the inventor (§§ 1.42, 1.43, or § 1.47) the oath or declaration shall state the relationship of the person to the inventor, and, upon information and belief, the facts which the inventor would have been required to state. If the person signing is the legal representative of a deceased inventor, the oath or declaration shall also state that the person is a legal representative and the citizenship, residence, and mailing address of the legal representative.

The declaration filed 04 January 2010 was executed by Harvey Wine as "executor" to the deceased inventor, William Abraham Wine. The declaration provides the country of citizenship for the deceased inventor and the residence, post office address, and country of citizenship for the legal representative. Therefore, the declaration is acceptable under 37 CFR 1.42 and complies with 37 CFR 1.497(a)-(b).

CONCLUSION

The papers filed under 37 CFR 1.42 are ACCEPTED.

This application is being forwarded to the National Stage Processing Branch of the International Division for continued national stage processing.

Anthony Smith
Attorney-Advisor
Office of PCT Legal Administration
Tel: (571) 272-3298

UNITED STATES PATENT AND TRADEMARK OFFICE

Commissioner for Patents
United States Patent and Trademark Office
P.O. Box 1450
Alexandria, VA 22313-1450
www.uspto.gov

DICKINSON WRIGHT, PLLC
1875 EYE STREET, NW
SUITE 1200
WASHINGTON, DC 20006

MAILED

JUL 01 2010

OFFICE OF PETITIONS

In re Application of	:	
Joachim Charzinski	:	DECISION ON PETITION
Application No. 12/373,633	:	TO WITHDRAW
Filed: December 23, 2009	:	FROM RECORD
Attorney Docket No. 2006P14637 (NSN)	:	

This is a decision on the Request to Withdraw as attorney or agent of record under 37 C.F.R. § 1.36(b), filed May 31, 2010.

The request is **NOT APPROVED** because it is moot.

A review of the file record indicates that on June 7, 2010 the power of attorney to Dickinson Wright, PLLC was revoked by the assignee of the patent application. Accordingly, the request to withdraw under 37 C.F.R. § 1.36(b) is moot.

All future communications from the Office will be directed to the below-listed address until otherwise notified by applicant.

Telephone inquires concerning this decision should be directed to the undersigned at 571-272- 7751. All other inquires concerning either the examination or status of the application should be directed to the Technology Center.

Joan Olszewski
Petitions Examiner
Office of Petitions

cc: LERNER GREENBERG STEMER LLP
P O BOX 2480
HOLLYWOOD FL 33022-2480

UNITED STATES PATENT AND TRADEMARK OFFICE

UNITED STATES DEPARTMENT OF COMMERCE
United States Patent and Trademark Office
Address: COMMISSIONER FOR PATENTS
P.O. Box 1450
Alexandria, Virginia 22313-1450
www.uspto.gov

APPLICATION NO.	FILING DATE	FIRST NAMED INVENTOR	ATTORNEY DOCKET NO.	CONFIRMATION NO.
12/373,713	06/22/2009	John Francis Lyons	3073.071A	2240

7590 06/24/2010
HESLIN ROTHENBERG FARLEY & MESITI PC
5 COLUMBIA CIRCLE
ALBANY, NY 12203

EXAMINER

ART UNIT	PAPER NUMBER
1644	

MAIL DATE	DELIVERY MODE
06/24/2010	PAPER

DECISION DISMISSING PETITION UNDER 37 CFR 1.138(d)

The declaration of express abandonment will not be recognized

This is in response to the petition under 37 CFR 1.138(d), requesting for a refund of any previously paid search fee and excess claims fee in the above-identified application.

The petition is dismissed.

The express abandonment will **not** be recognized for the reason(s) indicated below:

1. ☐ The petition was not filed in sufficient time to permit the appropriate officials to recognize the abandonment before an examination has been made of the application. See 37 CFR 1.138(d).
2. ☐ The petition was not signed by a party authorized by 37 CFR 1.33(b)(1), (3) or (4).
3. ☑ The application is not an application filed under 35 U.S.C. 111(a) on or after December 8, 2004.
4. ☐ The petition for express abandonment under 1.138(d) is dismissed because the applicant did not pay any search fee and excess claims fees in the above-identified application.

Telephone inquiries should be directed to the Office of Data Management at (571) 272-4200.

Mimi Farmer

Patent Publication Branch
Office of Data Management

FORM PET651D (Rev. 08/07)

UNITED STATES PATENT AND TRADEMARK OFFICE

MAY 11 2010

Commissioner for Patents
United States Patent and Trademark Office
P.O. Box 1450
Alexandria, VA 22313-1450
www.uspto.gov

SQUIRE, SANDERS & DEMPSEY L.L.P.
1 MARITIME PLAZA, SUITE 300
SAN FRANCISCO CA 94111

In re Application of	:	
KIKUCHI, HIROKO et. al.	:	DECISION ON REQUEST TO
Application No. 12/373,725	:	PARTICIPATE IN PCT-PATENT
Filed: January 13, 2009	:	PROSECUTION HIGHWAY PILOT
Attorney Docket No. 103611.00001	:	PROGRAM AND PETITION
	:	TO MAKE SPECIAL UNDER
	:	37 CFR 1.102(d)

This is a decision on the request to participate in the PCT-Patent Prosecution Highway (PPH) Pilot program and the petition under 37 CFR 1.102(d), filed February 18, 2010, to make the above-identified application special.

The request and petition are **GRANTED**.

A grantable request to participate in the PCT- PPH Pilot program and petition to make special require:

(1) The U.S. application is a national stage entry of the corresponding JPO PCT application;
(2) The latest work product in the international phase of the PCT application corresponding to the US application, namely the WO/ISA, or the WO/IPEA, or the IPER, indicates at least one claim in the PCT claim has novelty, inventive step and industrial applicability.
(3) Applicant must submit a copy of the allowable/patentable claim(s) from the corresponding PCT application(s) along with an English translation thereof;
(4) All the claims in the U.S. application must sufficiently correspond or be amended to sufficiently correspond to the allowable/patentable claim(s) in the PCT application;
(5) Examination of the U.S. application has not begun;
(6) Unless already filed in the U.S. application for which participation in the PCT-PPH pilot program is requested, applicant must submit a copy of the latest international work product, WO/ISA, or WO/IPEA or IPER, which indicated that the claim(s) has/have novelty, inventive step and industrial applicability along with an English translation thereof;
(7) Applicant must submit an IDS listing the documents cited international work product, WO/ISA, or WO/IPEA or IPER along with copies of documents except U.S. patents or U.S. patent application publications; and
(8) The required petition fee under 37 CFR 1.17(h).

The request to participate in the PCT-PPH Pilot program and petition comply with the above requirements. Accordingly, the above-identified application has been accorded "special" status.

Telephone inquiries concerning this decision should be directed to Ram R. Shukla at 571-272-0735.

All other inquiries concerning the examination or status of the application should be directed to Patent Application Information Retrieval (PAIR) system at the http://www.uspto.gov/ebc/index.html.

The application is being forwarded to the examiner for action on the merits commensurate with this decision.

/Ram. R. Shukla/

Ram R. Shukla, Ph.D.
Supervisory Patent Examiner
TC 1600

UNITED STATES PATENT AND TRADEMARK OFFICE

Commissioner for Patents
United States Patent and Trademark Office
P.O. Box 1450
Alexandria, VA 22313-1450
www.uspto.gov

CAHN & SAMUELS LLP
1100 17TH STREET N.W.
SUITE 401
WASHINGTON, DC 20036

MAILED

JUN 30 2010

OFFICE OF PETITIONS

Applicant: Hino, et al.
Appl. No.: 12/373,750
International Filing Date: July 11, 2007
Title: COMPOSITE COMPOSITION FOR MICROPATTERNED LAYERS
Attorney Docket No.: 911.0006
Pub. No.: US 2009/0258197 A1
Pub. Date: October 15, 2009

This is a decision on the request for a corrected patent application publication under 37 CFR 1.221(b) or (a), received on November 4, 2009, for the above-identified application.

The request is granted.

The corrected patent application publication will be published in due course, unless the patent issues before the application is republished.

Inquiries relating to this matter may be directed to Mark Polutta at (571) 272-7709.

Mark Polutta
Senior Legal Advisor
Office of Patent Legal Administration
Office of the Deputy Commissioner
for Patent Examination Policy

UNITED STATES PATENT AND TRADEMARK OFFICE

Commissioner for Patents
United States Patent and Trademark Office
P.O. Box 1450
Alexandria, VA 22313-1450
www.uspto.gov

MAILED

APR 23 2010

OFFICE OF PETITIONS

MARSHALL, GERSTEIN & BORUN LLP
233 SOUTH WACKER DRIVE
6300 WILLIS TOWER
CHICAGO IL 60606-6357

In re Application of	:	
Limin Liu et al.	:	
Application No. 12/373,769	:	ON PETITION
Filed: December 18, 2009	:	
Attorney Docket 28216/42182A	:	

This is a decision on the petition under 37 CFR 1.182, filed December 18, 2009, to change the name of one of the inventors.

The petition is **GRANTED**.

The name of the inventor has been changed from **Ray Vakili** to **Gholam-Reza Vakili-Tahami**.

The application file is being referred to the Office of Initial Patent Examination for further processing.

Telephone inquiries regarding this decision may be directed to Kimberly Inabinet (571) 272-4618.

Carl Friedman
Petitions Examiner
Office of Petitions

UNITED STATES PATENT AND TRADEMARK OFFICE

UNITED STATES DEPARTMENT OF COMMERCE
United States Patent and Trademark Office
Address: COMMISSIONER FOR PATENTS
P.O. Box 1450
Alexandria, Virginia 22313-1450
www.uspto.gov

APPLICATION NO.	FILING DATE	FIRST NAMED INVENTOR	ATTORNEY DOCKET NO.	CONFIRMATION NO.
12/373,875	01/14/2009	Atsushi Ito	1034290-000027	3567

21839 7590 03/16/2010
BUCHANAN, INGERSOLL & ROONEY PC
POST OFFICE BOX 1404
ALEXANDRIA, VA 22313-1404

EXAMINER

ART UNIT	PAPER NUMBER
3741	

NOTIFICATION DATE	DELIVERY MODE
03/16/2010	ELECTRONIC

Please find below and/or attached an Office communication concerning this application or proceeding.

The time period for reply, if any, is set in the attached communication.

Notice of the Office communication was sent electronically on above-indicated "Notification Date" to the following e-mail address(es):

ADIPFDD@bipc.com
offserv@bipc.com

UNITED STATES PATENT AND TRADEMARK OFFICE

Commissioner for Patents
United States Patent and Trademark Office
P.O. Box 1450
Alexandria, VA 22313-1450
www.uspto.gov

BUCHANAN, INGERSOLL & ROONEY PC
POST OFFICE BOX 1404
ALEXANDRIA VA 22313-1404

In re Application of	:	
ITO, ATSUSHI et al	:	DECISION ON REQUEST TO
Application No. 12/373,875	:	PARTICIPATE IN PATENT
Filed: Jan. 14, 2009	:	PCT/PROSECUTION HIGHWAY
Attorney Docket No. 1034290-000027	:	PROGRAM AND PETITION
For: INTAKE APPARATUS FOR INTERNAL COMBUSTION ENGINE	:	37 CFR 1.102(d)

This is a decision on the request to participate in the Patent Prosecution Highway (PPH) program and the petition under 37 CFR 1.102(d), filed March 15, 2010 to make the above-identified application special.

The request and petition are dismissed.

A grantable request to participate in the PCT/PPH pilot program and petition to make special require:

(1) The U.S. application is (1) a national stage entry of the corresponding PCT application, or (2) a national stage entry of another PCT application which claims priority to the corresponding PCT application, or (3) a national application that claims domestic/foreign priority to the corresponding PCT application, or (4) a national application which forms the basis for the priority claim in the corresponding PCT application.
(2) Applicant must submit a copy of the allowable/patentable claim(s) from the EPO application(s) along with an English translation thereof and a statement that the English translation is accurate;
(3) All the claims in the U.S. application must sufficiently correspond or be amended to sufficiently correspond to the allowable/patentable claim(s) in the corresponding PCT/EPO application(s);
(4) Examination of the U.S. application has not begun;
(5) Applicant must submit a copy of all the international work product of the PCT office actions from each of the PCT/EPO application(s) containing the allowable/patentable claim(s) along with an English translation thereof and a statement that the English translation is accurate;

(6) Applicant must submit an IDS listing the documents cited by the ISA/EPO examiner in the PCT/EPO office action along with copies of documents except U.S. patents or U.S. patent application publications; and
(7) The required petition fee under 37 CFR 1.17(h).

The request to participate in the PPH program and petition met all conditions except Items #5 and #6 above. The request to participate in the PPH pilot program and petition fail to include a copy of:

1. PCT written opinion regarding the claims 1-6 is not included. No such written opinion was filed on Jan. 14, 2009. 2. PCT cited patent documents in IDS filed on Jan. 14, 2009, namely, DE 19944108 A1, EP 1340892 A2, JP 2001-519006 A, JP 2002-130063 A, JP 2002-130064 A and JP 2003-083072 A.

Applicant is encouraged to cite and submit all relevant prior art references, if any, to facilitate examination in this application.

Applicant is given a time period of **ONE MONTH or THIRTY DAYS**, whichever is longer, from the mailing date of this decision to correct the deficiencies. **NO EXTENSION OF TIME UNDER 37 CFR 1.136 IS PERMITTED.** If the deficiencies are not corrected with the time period given, the application will await action in its regular turn.

Response must be filed via EFS-Web. Telephone inquiries concerning this decision should be directed to Henry C. Yuen, at 571-272-4856.

The petition is dismissed.

/Henry C. Yuen/

Henry C. Yuen, Special Programs Examiner
Technology Center 3700 – Mechanical Engineering,
Manufacturing and Products
571-272-4856

UNITED STATES PATENT AND TRADEMARK OFFICE

UNITED STATES DEPARTMENT OF COMMERCE
United States Patent and Trademark Office
Address: COMMISSIONER FOR PATENTS
P.O. Box 1450
Alexandria, Virginia 22313-1450
www.uspto.gov

APPLICATION NO.	FILING DATE	FIRST NAMED INVENTOR	ATTORNEY DOCKET NO.	CONFIRMATION NO.
12/373,875	01/14/2009	Atsushi Ito	1034290-000027	3567

21839 7590 03/23/2010
BUCHANAN, INGERSOLL & ROONEY PC
POST OFFICE BOX 1404
ALEXANDRIA, VA 22313-1404

EXAMINER

ART UNIT	PAPER NUMBER
3741	

NOTIFICATION DATE	DELIVERY MODE
03/23/2010	ELECTRONIC

Please find below and/or attached an Office communication concerning this application or proceeding.

The time period for reply, if any, is set in the attached communication.

Notice of the Office communication was sent electronically on above-indicated "Notification Date" to the following e-mail address(es):

ADIPFDD@bipc.com
offserv@bipc.com

UNITED STATES PATENT AND TRADEMARK OFFICE

Commissioner for Patents
United States Patent and Trademark Office
P.O. Box 1450
Alexandria, VA 22313-1450
www.uspto.gov

BUCHANAN, INGERSOLL & ROONEY PC
POST OFFICE BOX 1404
ALEXANDRIA VA 22313-1404

In re Application of	:	
ITO, ATSUSHI et al	:	DECISION ON REQUEST TO
Application No. 12/373,875	:	PARTICIPATE IN PATENT
Filed: Jan. 14, 2009	:	PCT/PROSECUTION HIGHWAY
Attorney Docket No. 1034290-000027	:	PROGRAM AND PETITION
For: INTAKE APPARATUS FOR INTERNAL COMBUSTION ENGINE	:	37 CFR 1.102(d)

This is a decision on the renewed request to participate in the Patent Prosecution Highway (PPH) program and the petition under 37 CFR 1.102(d), filed March 18, 2010 to make the above-identified application special.

The request and petition are granted.

A grantable request to participate in the PCT/PPH pilot program and petition to make special require:

(1) The U.S. application is (1) a national stage entry of the corresponding PCT application, or (2) a national stage entry of another PCT application which claims priority to the corresponding PCT application, or (3) a national application that claims domestic/foreign priority to the corresponding PCT application, or (4) a national application which forms the basis for the priority claim in the corresponding PCT application.
(2) Applicant must submit a copy of the allowable/patentable claim(s) from the EPO application(s) along with an English translation thereof and a statement that the English translation is accurate;
(3) All the claims in the U.S. application must sufficiently correspond or be amended to sufficiently correspond to the allowable/patentable claim(s) in the corresponding PCT/EPO application(s);
(4) Examination of the U.S. application has not begun;
(5) Applicant must submit a copy of all the international work product of the PCT office actions from each of the PCT/EPO application(s) containing the allowable/patentable claim(s) along with an English translation thereof and a statement that the English translation is accurate;

(6) Applicant must submit an IDS listing the documents cited by the ISA/EPO examiner in the PCT/EPO office action along with copies of documents except U.S. patents or U.S. patent application publications; and
(7) The required petition fee under 37 CFR 1.17(h).

The request to participate in the PCT/PPH pilot program and petition comply with the above requirements. Accordingly, the above-identified application has been accorded "special" status.

Applicant is encouraged to cite and submit all relevant prior art references, if any, to facilitate examination in this application.

All other inquiries concerning the examination or status of the application should be directed to Michael Cuff, the SPE of Art Unit 3741, 571-272-6778 and also accessible in the PAIR system at http://www.uspto.gov/ebc.index.html.

Telephone inquiries concerning this decision should be directed to Henry C. Yuen, at 571-272-4856.

The petition is **granted.**

/Henry C. Yuen/

Henry C. Yuen, Special Programs Examiner
Technology Center 3700 – Mechanical Engineering,
Manufacturing and Products
571-272-4856

UNITED STATES PATENT AND TRADEMARK OFFICE

Commissioner for Patents
United States Patent and Trademark Office
P.O. Box 1450
Alexandria, VA 22313-1450
www.uspto.gov

CST

April 7, 2010

In re application of Sadaki Yamamoto et al Serial No. 12/373,878 Filed: January 14, 2009 For: MANUFACTURING METHOD OF SYNTHETIC RESIN HOLLOW BODY	: : : : : :	DECISION ON REQUEST TO PARTICIPATE IN PATENT PROSECUTION HIGHWAY PROGRAM AND PETITION TO MAKE SPECIAL UNDER 37 CFR 1.102(d)

This is a decision on the request to participate in the Patent Prosecution Highway (PPH) program filed February 5, 2010.

The request and petition are **GRANTED**.

A grantable request to participate in the PPH program and petition to make special require:

(1) The U.S. application must validly claim priority under 35 U.S.C. 119(a) to one or more applications filed in the JPO, note where the JPO application with similar claims is not the same application from which the U.S. application claims priority that the applicant must identify the relationship between the JPO application with similar claims and the JPO priority application;

(2) Applicant must submit a copy of:
   a. The allowable/patentable claim(s) from the JPO application(s) or if a copy of the allowable/patentable claims is available via the Dossier Access System (DAS) applicant may request the USPTO to obtain a copy from DAS; however, if the USPTO is unable to obtain a copy from the DAS, the applicant will be required to submit a copy;
   b. An English translation of the allowable/ patentable claim(s), if applicable; and
   c. A statement that the English translation is accurate, if applicable;

(3) Applicant must:
   a. Ensure all the claims in the U.S. application must sufficiently correspond or be amended to sufficiently correspond to the allowable/patentable claim(s) in the JPO application(s); and
   b. Submit a claims correspondence table in English;

(4) Examination of the U.S. application has not begun;

(5) Applicant must submit:
a. Documentation of prior office action:
i. a copy of the office action(s) just prior to the "Decision to Grant a Patent" from each of the JPO application(s) containing the allowable/patentable claims(s) or
ii. if the allowable/patentable claim(s) are from "Notification of Reasons for Refusal" then the Notification of Reasons for Refusal or
iii. if the JPO application is a first action allowance then no office action from the JPO is necessary should be indicated on the request/petition form:
Further, if a copy of the documents from a or b is available via the Dossier Access System (DAS), applicant may request the USPO obtain a copy from the DAS; however, if the USPTO is unable to obtain a copy of the DAS, the applicant will be required to submit a copy;
b. An English language translation of the JPO Office action from (5)(a)(i)-(ii) above if applicable; and
c. A statement that the English translation is accurate;

(6) Applicant must submit:
a. An IDS listing the documents cited by the JPO examiner in the JPO office action (unless already submitted in this application)
b. Copies of documents except U.S. patents or U.S. patent application publications (unless already submitted in this application); and

(7) The required petition fee under 37 CFR 1.17(h).

The request to participate in the PPH program and petition comply with the above requirements. Accordingly, the above-identified application has been accorded "special" status.

The application is being forwarded to the examiner for action on the merits commensurate with this decision.

Any inquiry regarding this decision should be directed to Christine Tierney, Quality Assurance Specialist, at (571) 272-1055.

All other inquiries concerning the examination or status of the application is accessible in the PAIR system at http://www.uspto.gov/ebc/index.html.

/Christine Tierney/

Christine Tierney
Quality Assurance Specialist
Technology Center 1700

UNITED STATES PATENT AND TRADEMARK OFFICE

UNITED STATES DEPARTMENT OF COMMERCE
United States Patent and Trademark Office
Address: COMMISSIONER FOR PATENTS
P.O. Box 1450
Alexandria, Virginia 22313-1450
www.uspto.gov

APPLICATION NO.	FILING DATE	FIRST NAMED INVENTOR	ATTORNEY DOCKET NO.	CONFIRMATION NO.
12/374,075	01/16/2009	Suguru Dohi	2941-189	5662

6449 7590 04/23/2010
ROTHWELL, FIGG, ERNST & MANBECK, P.C.
1425 K STREET, N.W.
SUITE 800
WASHINGTON, DC 20005

EXAMINER

ART UNIT	PAPER NUMBER
1623	

NOTIFICATION DATE	DELIVERY MODE
04/23/2010	ELECTRONIC

Please find below and/or attached an Office communication concerning this application or proceeding.

The time period for reply, if any, is set in the attached communication.

Notice of the Office communication was sent electronically on above-indicated "Notification Date" to the following e-mail address(es):

PTO-PAT-Email@rfem.com

UNITED STATES PATENT AND TRADEMARK OFFICE

Commissioner for Patents
United States Patent and Trademark Office
P.O. Box 1450
Alexandria, VA 22313-1450
www.uspto.gov

ROTHWELL, FIGG, ERNST & MANBECK, P.C.
1425 K STREET, N.W.
SUITE 800
WASHINGTON DC 20005

Applicant: Dohi
Appl. No.: 12/374,075
Filing Date: January 16, 2009
Title: 2'-CYANOPYRIMIDINE NUCLEOSIDE COMPOUND
Attorney Docket No.: 2941-189
Pub. No.: US 2010/0056466 A1
Pub. Date: March 4, 2010

This is a decision on the request for republication of patent application publication under 37 CFR 1.221(a), filed on April 19, 2010, for the above-identified application.

The request under 37 CFR 1.221(a) is DISMISSED.

37 CFR 1.221(a) requires "a copy of the application in compliance with the Office electronic filing system requirements and be accompanied by the publication fee set forth in § 1.18(d) and the processing fee set forth in § 1.17(i)". If the request for republication does not comply with the electronic filing system requirements, the republication will not take place and the publication fee set forth in § 1.18(d) will be refunded. The processing fee will be retained.

The applicant did not supply a copy of the application in compliance with the Office electronic filing system, as required by 37 CFR 1.221(a) because **the Applicant submitted the papers as a "Document for an existing application", which are entered into the application file, and not as a "Pre-Grant Publication" submission**. In addition, the Applicant did not provide a copy of the application for publication purposes. The request for republication does not comply with the electronic filing system requirements, thus republication will not take place.

Any request for republication under 37 CFR 1.221(a), must be submitted via the EFS system, as a Pre-Grant publication submission and must include a copy of the application in compliance with the Office electronic filing system requirements. The applicant is directed to the following website for additional instructions on how to submit a Pre-Grant Publication submission via the electronic filing system:

http://www.uspto.gov/ebc/portal/efs/pgpub_quickstart.pdf

Any questions or requests for reconsideration of the decision should be addressed as follows:

By mail to: Mail Stop PGPUB
Commissioner for Patents
P.O. Box 1450
Alexandria, Va. 22313-1450

By facsimile: 571-273-8300

Telephone inquiries regarding this correspondence should be directed to The Office of Data Management at 571-272-4200.

Tammy J. Koontz
Office of Data Management
United States Patent & Trademark Office

Adjustment date: 04/23/2010 KKING1
04/20/2010 INTEFSW 00002354 022135 12374075
01 FC:1504 300.00 CR

UNITED STATES PATENT AND TRADEMARK OFFICE

UNITED STATES DEPARTMENT OF COMMERCE
United States Patent and Trademark Office
Address: COMMISSIONER FOR PATENTS
P.O. Box 1450
Alexandria, Virginia 22313-1450
www.uspto.gov

APPLICATION NO.	FILING DATE	FIRST NAMED INVENTOR	ATTORNEY DOCKET NO.	CONFIRMATION NO.
12/374,140	01/16/2009	Shinsuke Sato	OLI-034	6109

32628 7590 02/24/2010
KANESAKA BERNER AND PARTNERS LLP
1700 DIAGONAL RD
SUITE 310
ALEXANDRIA, VA 22314-2848

EXAMINER

ART UNIT	PAPER NUMBER
2839	

MAIL DATE	DELIVERY MODE
02/24/2010	PAPER

Please find below and/or attached an Office communication concerning this application or proceeding.

The time period for reply, if any, is set in the attached communication.

UNITED STATES PATENT AND TRADEMARK OFFICE

Commissioner for Patents
United States Patent and Trademark Office
P.O. Box 1450
Alexandria, VA 22313-1450
www.uspto.gov

KANESAKA BERNER AND PARTNERS LLP
1700 DIAGONAL RD
SUITE 310
ALEXANDRIA VA 22314-2848

In re Application of	:	
SATO et al.	:	DECISION ON PETITION
Application No. 12/374,140	:	TO MAKE SPECIAL UNDER
Filed: 16 January 2009	:	THE GREEN TECHNOLOGY
Attorney Docket No. OLI-034	:	PILOT PROGRAM

This is a decision on the petition under 37 CFR 1.102, filed 23 December 2009, to make the above-identified application special under the pilot program for applications pertaining to Green Technologies as set forth 74 Federal Register Notice 64666 (December 8, 2009).

The petition is **GRANTED**.

A grantable petition to make an application special under 37 CFR 1.102 and the pilot program as set forth in 74 FR 64666 must be directed to a nonprovisional application filed under 35 USC 111(a) or be a national stage entry under 35 USC 371, exclusive of any reissue applications and be filed prior to the date of the notice, December 8, 2009.

In order to qualify for special status, the following requirements must be met. 1) The application must be classified in one of the eligible US classifications listed in section VI of the notice. 2) The application must have no more than 3 independent claims and no more than 20 total claims. 3) The application must not contain any multiple dependent claims. 4) The petition must state the basis for seeking special status, i.e., the claimed invention either: A) materially enhances the quality of the environment or B) materially contributes to: i) the discovery or development of renewable energy resources, ii) the more efficient utilization and conservation of energy resources, or iii) greenhouse gas emission reduction. 5) If the disclosure is not clear on its face that the claimed invention materially contributes under category (A) or (B), the petition must be accompanied by a statement by the applicant, assignee, or an attorney/agent registered to practice before the Office explaining how the materiality standard is met. 6) A statement that applicant will agree to make an election without traverse in a telephonic interview if a restriction requirement is made by the examiner. 7) The petition to make special must be filed electronically. 8) The petition must be filed at least one day prior to the date that a first Office Action appears in the Patent Application Information Retrieval (PAIR) system. 9) The petition must be accompanied by a request for early publication in compliance with 37 CFR 1.219 and include the publication fee as set forth in 37 CFR 1.18(d).

The requirement for a fee for consideration of the petition to make special for applications pertaining to Green Technologies has been waived.

The instant petition complies with items 1 – 9 above. Accordingly, the above-identified application has been accorded "special" status.

Telephone inquires concerning this decision should be directed to Lee W. Young at 571-272-4549.

The application is being forwarded to the Technology Center Art Unit 2839 for action on the merits commensurate with this decision.

Lee W. Young
Quality Assurance Specialist
Technology Center 2800

UNITED STATES PATENT AND TRADEMARK OFFICE

Commissioner for Patents
United States Patent and Trademark Office
P.O. Box 1450
Alexandria, VA 22313-1450
www.uspto.gov

CLARK & ELBING LLP
101 FEDERAL STREET
BOSTON, MA 02110

MAILED

NOV 23 2009

OFFICE OF PETITIONS

In re Application of	:	
Peit Andre' Maurits Maria Herdewijn, et al.	:	
Application No. 12/374,223	:	DECISION ON PETITION
Filed: January 16, 2009	:	TO WITHDRAW
Attorney Docket No. 50304/135002	:	FROM RECORD
	:	

This is a decision on the Request to Withdraw as attorney or agent of record under 37 C.F.R. § 1.36(b), filed September 25, 2009.

The request is **NOT APPROVED**.

A grantable request to withdraw as attorney/agent of record must be signed by every attorney/agent seeking to withdraw or contain a clear indication that one attorney is signing on behalf of another/others.

The request cannot be approved because practitioners were appointed by customer number. Petitioner must withdraw in the same manner by which they were appointed. Additionally, as set forth in MPEP 403(I), the addition or deletion of a practitioner from the list of persons associated with a Customer Number should be done by way of a Request for Customer Number Data Change (PTO/SB/124) and not a Request for Withdrawal As Attorney or Agent and Change of Correspondence Address (Form PTO/SB/83).

All future communications from the Office will continue to be directed to the above-listed address until otherwise notified by applicant.

Telephone inquiries concerning this decision should be directed to undersigned at 571-272-1642. All other inquiries concerning the examination or status of this application should be directed to the Technology Center.

/AMW/
April M. Wise
Petitions Examiner
Office of Petitions

cc: GILEAD SCIENCES INC
333 LAKESIDE DRIVE
FOSTER CITY, CA 94404

UNITED STATES PATENT AND TRADEMARK OFFICE

Commissioner for Patents
United States Patent and Trademark Office
P.O. Box 1450
Alexandria, VA 22313-1450
www.uspto.gov

2 0 NOV 2009

Foley Hoag, LLP
Patent Group, World Trade Center West
155 Seaport Blvd.
Boston, MA 02110

In re Application of GAO, et al. U.S. Application No. 12/374,242 PCT No.: PCT/BE2007/000069 Int. Filing Date: 20 July 2007 Priority Date: 20 July 2008 Attorney Docket No. 50304/133002 For: 4,6-DI- AND 2,4,6-TRISUBSTITUTED QUINAZOLINE DERIVATIVES AND PHARMACEUTICAL COMPOSITIONS USEFUL FOR TREATING VIRAL INFECTIONS	DECISION ON PETITION TO WITHDRAW FROM RECORD

This is a decision on the Request to Withdraw as attorney or agent of record under 37 C.F.R. § 1.36(b), filed 25 September 2009.

The request is **APPROVED**.

A grantable request to withdraw as attorney/agent of record must be signed by every attorney/agent seeking to withdraw or contain a clear indication that one attorney is signing on behalf of another/others. The Office will require the practitioner(s) to certify that he, she or they have: (1) given reasonable notice to the client, prior to the expiration of the reply period, which the practitioner(s) intends to withdraw from employment; (2) delivered to the client or a duly authorized representative of the client all papers and property (including funds) to which the client is entitled; and (3) notified the client of any replies that may be due and the time frame within which the client must respond, pursuant to 37 CFR 10.40 (c).

The request was signed by J. Cooper McDonald on behalf of all attorneys of record who are associated with Customer No. 21559.

All attorneys/agents associated with Customer Number 21559 have been withdrawn. Applicants are reminded that there is no attorney of record at this time.

Additionally, J. Cooper McDonald requested to change the correspondence address and direct all future correspondence to the assignee associated with Customer Number 25000.

However, a review of the application reveals that the assignee has not established their right to take action as provided in 37 CFR 3.71 and Manual of Patent Examining Procedure (MPEP) Section 324. Therefore, all future correspondence will be directed to the first named inventor at the address indicated below.

Currently, there is no outstanding Office action that requires a reply.

This application is being returned to the United States Designated/Elected Office for processing in accordance with this decision.

Anthony Smith
Attorney-Advisor
Office of PCT Legal Administration
Telephone: (571) 272-3298

cc: Ling-Jie Gao
Leeuwerikenstraat 57/304
B-3001 Heverlee
Belgium

UNITED STATES PATENT AND TRADEMARK OFFICE

COMMISSIONER FOR PATENTS
UNITED STATES PATENT AND TRADEMARK OFFICE
P.O. BOX 1450
ALEXANDRIA, VA 22313-1450
www.uspto.gov

Paper No.

SCHWABE WILLIAMSON & WYATT
PACWEST CENTER, SUITE 1900
1211 SW FIFTH AVENUE
PORTLAND OR 97204

COPY MAILED
FEB 18 2010

In re Application of :
Henry et al. :
Application Number: 12/374274 :
Filing or 371(c) Date: 09/22/2009 :
Attorney Docket Number: 065335-154666 :

NOTICE

This is a notice regarding your request for acceptance of a fee deficiency submission under 37 CFR 1.28 filed on December 8, 2009.

The Office no longer investigates or rejects original or reissue patent under 37 CFR 1.56. **1098 Off. Gaz. Pat. Office 502 (January 3, 1989)**. Therefore, nothing in this Notice is intended to imply that an investigation was done.

Your fee deficiency submission under 37 CFR 1.28 is hereby **ACCEPTED**.

This patent is no longer entitled to small entity status. Accordingly, all future fees paid in this patent must be paid at the large entity rate.

Inquiries related to this communication should be directed to the undersigned at (571) 272-3231.

D Wood

Douglas Wood
Attorney
Office of Petitions

UNITED STATES PATENT AND TRADEMARK OFFICE

Commissioner for Patents
United States Patent and Trademark Office
P.O. Box 1450
Alexandria, VA 22313-1450
www.uspto.gov

16 MAR 2009

30955
LATHROP & GAGE LC
4845 Pearl East Circle
Suite 201
Boulder, CO 80301

In re Application of
BALTZ *et al*
U.S. Application No.: 12/374,275
PCT No.: PCT/US2004/031877
Int. Filing Date: 29 September 2004
Priority Date: 29 September 2003
Docket No.: 488371
For: FREQUENCY DOMAIN LUMINESCENCE INSTRUMENTATION

DECISION ON PETITION UNDER 37 CFR 1.137(b)

Applicants' petition to revive under 37 CFR 1.137(b) filed with the national stage papers on 16 January 2009 is hereby **GRANTED** as follows:

A petition to revive pursuant to 37 CFR 1.137(b) requires: (1) a proper reply, (2) the petition fee required by law, (3) a statement that the "entire delay in filing the required reply from the due date for the reply to the filing of a grantable petition pursuant to this paragraph was unintentional," and (4) any terminal disclaimer and fee required pursuant to 37 CFR 1.137(c).

The proper fees and the petition fee have been paid. A terminal disclaimer is not required. Items (1), (2) and (4) of 37 CFR 1.137(b) are satisfied.

With respect to item (3), the present petition includes a statement that "the entire delay in filing the required reply from the due date for the required reply until the filing of a grantable petition under 37 CFR 1.137(b) was unintentional."

It is noted that the present application has been abandoned for an extended period of time. The USPTO is relying on petitioners' duty of candor and good faith in accepting the statement that the entire delay in filing the required reply from the due date for the reply until the filing of a grantable petition pursuant to 37 CFR 1.137(b) was unintentional. See Changes to Patent Practice Procedure, 62 Fed. Reg. at 53160 and 53178, 1203 Off. Gaz. Pat. Office at 88 and 103 (responses to comments 64 and 109)(applicant obligated under 37 CFR 10.18 to inquire into the underlying facts and circumstances when providing a statement required by 37 CFR 1.137(b) to the Patent and Trademark Office). Based on this reliance, the statements provided herein are accepted as satisfying the requirements of 37 CFR 1.137(b).

12/374,275

This application is being forwarded to the United States Designated/Elected Office for further processing.

James Thomson

James Thomson
Attorney Advisor
Office of PCT Legal Administration

Tel.: (571) 272-3302

5 JUN 2009

UNITED STATES PATENT AND TRADEMARK OFFICE

Commissioner for Patents
United States Patent and Trademark Office
P.O. Box 1450
Alexandria, VA 22313-1450
www.uspto.gov

SHELDON MAK ROSE & ANDERSON PC
100 Corson Street
Third Floor
PASADENA CA 91103-3842

In re Application of	:	
DING	:	
Application No.: 12/374,289	:	DECISION ON
PCT No.: PCT/CN2006/002014	:	
Int. Filing Date: 09 August 2006	:	PETITION UNDER
Priority Date: 17 February 2006	:	
Attorney Docket No.: 19280US	:	37 CFR 1.137(b)
For: THE APPLICATION OF ...	:	
INFLAMMATORY BOWEL DISEASE	:	

This decision is in response to applicant's submission filed 16 January 2009.

BACKGROUND

On 09 August 2006, applicant filed international application PCT/CN2006/002014 which designated the U.S. and claimed a priority date of 17 February 2006. A copy of the international application was communicated to the United States Patent and Trademark Office (USPTO) from the International Bureau on 23 August 2007. The thirty-month period for paying the basic national fee in the United States expired at midnight on 18 August 2008 (17 August 2008 being a Sunday).

On 16 January 2009, applicant filed a transmittal letter for entry into the national stage in the United States, which was accompanied by, *inter alia*, the Basic National Fee and a petition under 37 CFR 1.137(b) to revive the application.

DISCUSSION

A petition to revive the present application under 37 CFR 1.137(b) must include:

(1) The required reply;
(2) The petition fee;
(3) A statement that the entire delay in filing the required reply from the due date for the reply until the filing of a grantable petition was unintentional.

As to item (1), applicant submitted the basic national fee on 16 January 2009.

As to item (2), applicant submitted the petition fee on 16 January 2009.

As to item (3), the required statement has been provided.

A review of the application file reveals that, with the filing of the present petition and accompanying papers, a proper response has been submitted and all of the requirements of 37 CFR 1.137(b) for revival have been satisfied and revival is therefore appropriate.

CONCLUSION

The petition under 37 CFR 1.137(b) is **GRANTED** for the reasons set forth above.

Please direct further correspondence with respect to this matter to Mail Stop PCT, Commissioner for Patents, Office of PCT Legal Administration, P.O. Box 1450, Alexandria, Virginia 22313-1450, with the contents of the letter marked to the attention of the Office of PCT Legal Administration.

This application is being forwarded to the National Stage Processing Branch of the Office of PCT Operations to continue national stage processing of the application including preparing and mailing a NOTIFICATION OF MISSING REQUIREMENTS (Form PCT/DO/EO/905) requiring an executed oath or declaration of the inventor in compliance with 37 CFR 1.497(a)-(b), an English translation of the international application as filed, the surcharge under 37 CFR 1.492(h) for filing any of the search fee, the examination fee, or the oath or declaration after the date of the commencement of the national stage, and the processing fee under 37 CFR 1.492(i) for furnishing an English translation later than thirty months from the earliest priority date claimed.

/Daniel Stemmer/

Daniel Stemmer
Legal Examiner
PCT Legal Affairs
Office of Patent Cooperation Treaty
Legal Administration
Telephone: (571) 272-3301
Facsimile: (571) 273-0459

2 2 JUN 2009

United States Patent and Trademark Office

Commissioner for Patents
United States Patent and Trademark Office
P.O. Box 1450
Alexandria, VA 22313-1450
www.uspto.gov

Pearl Cohen Zedek Latzer, LLP
1500 Broadway
12th Floor
New York NY 10036

In re Application of	:	
Ben-Levi et al.	:	
Application No. 12/374,316	:	
PCT No.: PCT/IL2007/000859	:	
Int. Filing Date: 10 July 2007	:	DECISION
Priority Date: 11 July 2006	:	
Att. Docket No.: 3017/21-US	:	
For: System And Method For	:	
Probe Mark Analysis	:	

The petition to revive under 37 CFR 1.137(b) filed on 19 January 2009 in the above-captioned application is hereby **GRANTED** as follows:

Petitioner states that "the entire delay in filing the required reply from the due date for the required reply until the filing of a grantable petition under 37 CFR 1.137(b) was unintentional." Said statement is accepted in satisfaction of 37 CFR 1.137(b)(3).

A review of the application file reveals that applicants have paid the petition fee. The required reply (in the form of the basic national fee) has been filed. No terminal disclaimer is required. Therefore, the request to revive the application abandoned under 35 U.S.C. 371(d) is granted as to the national stage in the United States of America.

This application is being forwarded to the Office of Patent Application Processing for further processing, including the preparation and mailing of a Notification of Missing Requirements (Form PCT/DO/EO/905) requiring the submission of an oath or declaration compliant with 37 CFR 1.497(a) and (b) and the surcharge under 37 CFR 1.492(h).

/George Dombroske/
George Dombroske
PCT Legal Examiner
Office of PCT Legal Administration
Tel: (571) 272-3283
Fax: (571) 273-0459

UNITED STATES PATENT AND TRADEMARK OFFICE

Commissioner for Patents
United States Patent and Trademark Office
P.O. Box 1450
Alexandria, VA 22313-1450
www.uspto.gov

CLARK & ELBING LLP
101 FEDERAL STREET
BOSTON, MA 02110

MAILED

NOV 23 2009

OFFICE OF PETITIONS

In re Application of	:	
Ling-Jie Gao, et al.	:	
Application No. 12/374,433	:	DECISION ON PETITION
Filed: January 20, 2009	:	TO WITHDRAW
Attorney Docket No. 50304/134002	:	FROM RECORD
	:	

This is a decision on the Request to Withdraw as attorney or agent of record under 37 C.F.R. § 1.36(b), filed September 25, 2009.

The request is **NOT APPROVED**.

A grantable request to withdraw as attorney/agent of record must be signed by every attorney/agent seeking to withdraw or contain a clear indication that one attorney is signing on behalf of another/others.

The request cannot be approved because practitioners were appointed by customer number. Petitioner must withdraw in the same manner by which they were appointed. Additionally, as set forth in MPEP 403(I), the addition or deletion of a practitioner from the list of persons associated with a Customer Number should be done by way of a Request for Customer Number Data Change (PTO/SB/124) and not a Request for Withdrawal As Attorney or Agent and Change of Correspondence Address (Form PTO/SB/83).

All future communications from the Office will continue to be directed to the above-listed address until otherwise notified by applicant.

Telephone inquiries concerning this decision should be directed to undersigned at 571-272-1642. All other inquiries concerning the examination or status of this application should be directed to the Technology Center.

/AMW/
April M. Wise
Petitions Examiner
Office of Petitions

cc: GILEAD SCIENCES INC
333 LAKESIDE DRIVE
FOSTER CITY, CA 94404

UNITED STATES PATENT AND TRADEMARK OFFICE

11 MAR 2009

COMMISSIONER FOR PATENTS
UNITED STATES PATENT AND TRADEMARK OFFICE
P.O. BOX 1450
ALEXANDRIA, VA 22313-1450
www.uspto.gov

DARBY & DARBY P.C.
P.O. BOX 770
CHURCH STREET STATION
NEW YORK, NY 10008-0770

In re Application of GARCIA GARCIA et al	:	
U.S. Application No.: 12/374,438	:	
PCT Application No.: PCT/ES2006/070096	:	
Int. Filing Date: 04 July 2006	:	DECISION
Priority Date Claimed: none	:	
Attorney Docket No.: 20840/0211249-US0	:	
For: METHOD FOR USING AN ATOMIC	:	
FORCE MICROSCOPE	:	

This is in response to applicant's petition under 37 CFR 1.137(b) filed 20 January 2009.

BACKGROUND

On 04 July 2006, applicant filed international application PCT/ES2006/070096. A copy of the international application was communicated to the USPTO from the International Bureau on 10 January 2008. The thirty-month period for paying the basic national fee in the United States expired on 04 January 2009.

On 05 January 2009, international application PCT/ES2006/070096 became abandoned as to the United States for failure to timely pay the basic national fee.

On 20 January 2009, applicant filed the present petition under 37 CFR 1.137(b).

DISCUSSION

Under 37 CFR 1.137(b), a petition requesting that an application be revived on the grounds of unintentional abandonment must be accompanied by: (1) the required reply unless previously filed, (2) the petition fee as set forth in 37 CFR 1.17(m), (3) a statement that the entire delay in filing the required reply from the due date for the reply until the filing of a grantable petition was unintentional, and (4) a terminal disclaimer if the application was filed before 08 June 1995.

With regard to item (1), applicant has provided the required reply under 35 U.S.C. 371.

With regard to item (2), applicant has provided the required petition fee.

With regard to item (3), the supplied statement of unintentional delay cannot be accepted at the present time. The affidavit of Domingo Represa states that international application PCT/ES2006/070096 was licensed to a third party (see Represa affidavit, ¶6) and that the licensee decided not to enter the U.S. national phase (see Represa affidavit, ¶7).

MPEP 711.03(c), Section E, Party Whose Delay is Relevant, states

> The question under 37 CFR 1.137 is whether the delay on the part of the party having the right or authority to reply to avoid abandonment (or not reply) was unavoidable or unintentional. When the applicant assigns the entire right, title, and interest in an invention to a third party (and thus does not retain any legal or equitable interest in the invention), the applicant's delay is irrelevant in evaluating whether the delay was unavoidable or even unintentional. See Kim v. Quigg, 718 F. Supp. 1280, 1284, 12 USPQ2d 1604, 1607-08 (E.D. Va. 1989). When an applicant assigns the application to a third party (e.g., the inventor/applicant's employer), and the third party decides not to file a reply to avoid abandonment, the applicant's actions, inactions or intentions are irrelevant under 37 CFR 1.137, unless the third party has reassigned the application to the applicant prior to the due date for the reply. Id.
>
> Likewise, <u>where the applicant permits a third party (whether a partial assignee, licensee, or other party) to control the prosecution of an application, the third party's decision whether or not to file a reply to avoid abandonment is binding on the applicant.</u> See Winkler, 221 F. Supp. at 552, 138 USPQ at 667. Where an applicant enters an agreement with a third party for the third party to take control of the prosecution of an application, the applicant will be considered to have given the third party the right and authority to prosecute the application to avoid abandonment (or not prosecute), unless, by the express terms of the contract between applicant and the third party, the third party is conducting the prosecution of the application for the applicant solely in a fiduciary capacity. See Futures Technology Ltd. v. Quigg, 684 F. Supp. 430, 431, 7 USPQ2d 1588, 1589 (E.D. Va. 1988). Otherwise, the applicant will be considered to have given the third party unbridled discretion to prosecute (or not prosecute) the application to avoid abandonment, and will be bound by the actions or inactions of such third party.

In the present case, it appears that the licensee was permitted to control the prosecution of the present application and made a deliberate decision not to enter the U.S. national phase. Therefore, in accordance with MPEP 711.03(c), the licensee's conscious decision to not enter the U.S. national phase is binding on applicant and cannot be deemed unintentional in light of the submitted evidence.

With regard to item (4), because the international application was filed after 08 June 1995, no terminal disclaimer is required.

CONCLUSION

For the reasons above, the petition under 37 CFR 1.137(b) is DISMISSED without prejudice.

If reconsideration on the merits of the petition is desired, a proper response must be filed within TWO (2) MONTHS from the mail date of this decision. Extensions of time are available under 37 CFR 1.136(a). Any reconsideration request should include a cover letter entitled "Renewed Petition Under 37 CFR 1.137(b)". No additional petition fee is required.

Please direct further correspondence with respect to this matter to Mail Stop PCT, Commissioner for Patents, Office of PCT Legal Administration, P.O. Box 1450, Alexandria, Virginia 22313-1450, with the contents of the letter marked to the attention of the Office of PCT Legal Administration.

Bryan Lin

Bryan Lin
PCT Legal Examiner
PCT Legal Office

Telephone: 571-272-3303
Facsimile: 571-273-0459

2 7 MAY 2009

UNITED STATES PATENT AND TRADEMARK OFFICE

COMMISSIONER FOR PATENTS
UNITED STATES PATENT AND TRADEMARK OFFICE
P.O. BOX 1450
ALEXANDRIA, VA 22313-1450
www.uspto.gov

DARBY & DARBY P.C.
P.O. BOX 770
CHURCH STREET STATION
NEW YORK, NY 10008-0770

In re Application of GARCIA GARCIA et al	:	
U.S. Application No.: 12/374,438	:	
PCT Application No.: PCT/ES2006/070096	:	
Int. Filing Date: 04 July 2006	:	DECISION
Priority Date Claimed: none	:	
Attorney Docket No.: 20840/0211249-US0	:	
For: METHOD FOR USING AN ATOMIC	:	
FORCE MICROSCOPE	:	

This is in response to applicant's renewed petition under 37 CFR 1.137(b) filed 20 April 2009.

BACKGROUND

On 04 July 2006, applicant filed international application PCT/ES2006/070096. A copy of the international application was communicated to the USPTO from the International Bureau on 10 January 2008. The thirty-month period for paying the basic national fee in the United States expired on 04 January 2009.

On 05 January 2009, international application PCT/ES2006/070096 became abandoned as to the United States for failure to timely pay the basic national fee.

On 20 January 2009, applicant filed a petition under 37 CFR 1.137(b).

On 11 March 2009, this Office mailed a decision dismissing the 20 January 2009 petition.

On 20 April 2009, applicant filed the present renewed petition under 37 CFR 1.137(b).

DISCUSSION

Under 37 CFR 1.137(b), a petition requesting that an application be revived on the grounds of unintentional abandonment must be accompanied by: (1) the required reply unless

previously filed, (2) the petition fee as set forth in 37 CFR 1.17(m), (3) a statement that the entire delay in filing the required reply from the due date for the reply until the filing of a grantable petition was unintentional, and (4) a terminal disclaimer if the application was filed before 08 June 1995.

Petitioner has previously satisfied items (1), (2), and (4) above.

With regard to item (3), the supplied statement of unintentional delay is accepted in view of the copy of the license agreement executed by the owner of the present application. The license agreement provides that ownership and control of the prosecution of the present application ultimately remained with the owner (see license agreement, ninth section, last paragraph.) Accordingly, the owner had the authority to reply in order to avoid abandonment, and the owner has stated that its failure to reply was unintentional.

CONCLUSION

For the reasons above, the renewed petition under 37 CFR 1.137(b) is GRANTED.

This application is being forwarded to the United States Designated/Elected Office (DO/EO/US) for further processing in accordance with this decision, including preparation and mailing of a Notification of Missing Requirements under 35 U.S.C. 371 (Form PCT/DO/EO/905) indicating that an oath or declaration in compliance with 37 CFR 1.497 must be filed.

Bryan Lin
Bryan Lin
PCT Legal Examiner
PCT Legal Office

Telephone: 571-272-3303
Facsimile: 571-273-0459

UNITED STATES PATENT AND TRADEMARK OFFICE

Commissioner for Patents
United States Patent and Trademark Office
P.O. Box 1450
Alexandria, VA 22313-1450
www.uspto.gov

FANELLI STRAIN & HAAG PLLC
1455 PENNSYLVANIA AVE., N.W.
SUITE 400
WASHINGTON, DC 20004

COPY MAILED

DEC 2 2 2009

OFFICE OF PETITIONS

In re Application of	:	
Rainer Machauer	:	
Application No. 12/374,469	:	DECISION ON PETITION
Filed: January 20, 2009	:	TO WITHDRAW
Attorney Docket No. 093286-0161	:	FROM RECORD
	:	

This is a decision on the Request to Withdraw as attorney or agent under 37 C.F.R. § 1.36(b) or 37 C.F.R. § 10.40 filed October 15, 2009.

The request is **APPROVED**.

A review of the file record indicates that Rouget F. Henschel: (1) does not have power of attorney in this patent application; and (2) has been employed or otherwise engaged in the proceedings in this patent application. In view of the present decision, Rouget F. Henschel has been withdrawn from the present application and may not prepare or submit papers under 37 C.F.R. § 1.34, or correspond in any manner in this application unless appointed in an acceptable power of attorney under 37 C.F.R. § 1.32(b).

Telephone inquiries concerning this decision should be directed to Irvin Dingle at 571-272-3210.

Irvin Dingle
Petitions Examiner
Office of Petitions

cc: Rouget F. Henschel
3000 K Street NW, Suite 600
Washington, DC 20007-5143

2 3 JUL 2009

UNITED STATES PATENT AND TRADEMARK OFFICE

Commissioner for Patents
United States Patent and Trademark Office
P.O. Box 1450
Alexandria, VA 22313-1450
www.uspto.gov

NXP, B.V.
NXP INTELLECTUAL PROPERTY & LICENSING
M/S41-SJ
1109 MCKAY DRIVE
SAN JOSE CA 95131

In re Application of:	:	DECISION
COLLADOS ASENSIO, Manel, et al.	:	
U.S. Application No.: 12/374,491	:	ON
PCT Application No.: PCT/IB2007/052348	:	
International Filing Date: 19 June 2007	:	PETITION
Priority Date: 28 June 2006	:	
Attorney's Docket No.: 00 5413 US	:	UNDER
For: IMPROVED PHASE-TO-FREQUENCY	:	
CONVERSION FOR POLAR	:	37 CFR 1.137 (b)
TRANSMITTERS	:	

The petition to revive under 37 CFR 1.137(b) filed 21 January 2009 in the above-captioned application is hereby **GRANTED** as follows:

Applicant's statement that "the entire delay in filing the required reply from the due date for the required reply until the filing of a grantable petition under 37 CFR 1.137(b) was unintentional" meets the requirements of 37 CFR 1.137(b)(3).

A review of the application file reveals that applicant has submitted the basic national fee and the requirements of 37 CFR 1.137(b) have been satisfied. Therefore, the request to revive the application abandoned under 35 U.S.C. 371(d) is granted as to the National stage in the United States of America.

The application has an international filing date under 35 U.S.C. 363 of 19 June 2007 and a date under 35 U.S.C. (c)(1), (c)(2), and (c)(4) of 21 January 2009.

This application is being returned to the United States Designated/Elected Office (DO/EO/US) for processing in accordance with this decision.

BryanLin

Bryan Lin
PCT Legal Examiner
Office of PCT Legal Administration

Harry C. Kim
PCT Special Programs Examiner
Office of PCT Legal Administration
Telephone: (571) 272-3285

UNITED STATES PATENT AND TRADEMARK OFFICE

Commissioner for Patents
United States Patent and Trademark Office
P.O. Box 1450
Alexandria, VA 22313-1450
www.uspto.gov

MAIL

AUG 18 2009

DIRECTOR'S OFFICE
TECHNOLOGY CENTER 2600

LEE, HONG, DEGERMAN, KANG & WAIMEY
660 S. FIGUEROA STREET
Suite 2300
LOS ANGELES CA 90017

In re Application of	:	
JEON, BEOM JIN et al	:	DECISION ON REQUEST TO
Application No. 12/374,540	:	PARTICIPATE IN PATENT
Filed: January 21, 2009	:	PROSECUTION HIGHWAY
Attorney Docket No. 2080-3697	:	PROGRAM AND PETITION
	:	TO MAKE SPECIAL UNDER
	:	37 CFR 1.102(d)

This is a decision on the request to participate in the Patent Prosecution Highway (PPH) program and the petition under 37 CFR 1.102(d), filed March 11, 2009, to make the above-identified application special.

The request and petition are **GRANTED**.

A grantable request to participate in the PPH program and petition to make special require:

(1) The U.S. application must validly claim priority under 35 U.S.C. 119(a) to one or more applications filed in the KIPO;
(2) Applicant must submit a copy of the allowable/patentable claim(s) from the KIPO application(s) along with an English translation thereof and a statement that the English translation is accurate;
(3) All the claims in the U.S. application must sufficiently correspond or be amended to sufficiently correspond to the allowable/patentable claim(s) in the KIPO application(s);
(4) Examination of the U.S. application has not begun;
(5) Applicant must submit a copy of all the office actions from each of the KIPO application(s) containing the allowable/patentable claim(s) along with an English translation thereof and a statement that the English translation is accurate;
(6) Applicant must submit an IDS listing the documents cited by the KIPO examiner in the KIPO office action along with copies of documents except U.S. patents or U.S. patent application publications; and
(7) The required petition fee under 37 CFR 1.17(h).

The request to participate in the PPH program and petition comply with the above requirements. Accordingly, the above-identified application has been accorded "special" status.

Telephone inquiries concerning this decision should be directed to Michael Horabik at 571-272-3068.

All other inquiries concerning the examination or status of the application should be directed to Patent Application Information Retrieval (PAIR) system.

The application is being forwarded to the examiner for action on the merits commensurate with this decision.

Michael Horabik
Quality Assurance Specialist
Technology Center 2600
Communications

UNITED STATES PATENT AND TRADEMARK OFFICE

Commissioner for Patents
United States Patent and Trademark Office
P.O. Box 1450
Alexandria, VA 22313-1450
www.uspto.gov

FISH & RICHARDSON, P.C.
P.O. BOX 1022
MINNEAPOLIS, MN 55440-1022

COPY MAILED

JUL 07 2009

OFFICE OF PETITIONS

In re Application of	:	
Marshall MEDOFF	:	
Application No. 12/374,549	:	DECISION ON PETITION
Filed: January 21, 2009	:	TO MAKE SPECIAL UNDER
Attorney Docket No. 08895-0058US1	:	37 CFR 1.102(c)(1)
	:	

This is a decision on the petition under 37 CFR 1.102(c)(1), filed June 2, 2009, to make the above-identified application special based on applicant's age as set forth in M.P.E.P. § 708.02, Section IV.

The petition is **GRANTED**.

A grantable petition to make an application special under 37 CFR 1.102(c)(1) and MPEP § 708.02, Section IV: Applicant's Age must be accompanied by evidence showing that at least one of the applicants is 65 years of age, or more, such as a birth certificate or a statement by applicant. No fee is required

The instant petition includes a declaration statement made by the applicant. Accordingly, the above-identified application has been accorded "special" status.

This application is being referred back to the Office of Patent Application Processing. This application will be accorded "special" status when pre-examination processing is done.

Telephone inquiries concerning this decision should be directed to the undersigned at 571-272-6735.

Diane Goodwyn
Petitions Examiner
Office of Petitions

10 FEB 2009

UNITED STATES PATENT AND TRADEMARK OFFICE

Commissioner for Patents
United States Patent and Trademark Office
P.O. Box 1450
Alexandria, VA 22313-1450
www.uspto.gov

Eckert Seamans Cherin & Mellott, LLC
U.S. Steel Tower
600 Grant Street, 44th Floor
Pittsburgh PA 15219

In re Application of: LAVI et al.	:	
Application No.: 12/374,552	:	
PCT No.: PCT/IL07/00904	:	DECISION ON PETITION
Int. Filing Date: 18 July 2007	:	UNDER 37 CFR 1.137(b)
Priority Date: 19 July 2006	:	
Attorney Docket No.: 298856-00161	:	
For: METHOD OF CONFIGURING A CONSTRUCTION	:	

This decision is in response to applicant's "Petition to Revive Unintentionally Abandoned Application" filed 21 January 2009 to revive international application PCT/IL07/00904.

On 18 July 2007, applicant filed international application PCT/IL07/00904, which designated the United States and claimed a priority date of 19 July 2006. Pursuant to 37 CFR 1.495, the deadline for payment of the basic national fee in the United States was to expire 30 months from the priority date, 21 January 2009. (The United States Patent and Trademark Office was closed, due to Federal Holidays within the District of Columbia, on 19 January 2009 and 20 January 2009.)

On 21 January 2009, applicant filed a transmittal letter for entry into the national stage in the United States which was accompanied by, inter alia: the basic national fee, a copy of the international application; an application data sheet, a preliminary amendment; and the petition to revive under 37 CFR 1.137(b) considered herein.

Since the international application was not abandoned, the present petition to revive is not necessary. Therefore, applicant's petition to revive international application PCT/IL07/00904 is **DISMISSED as moot**. The petition fee will be refunded to counsel's credit card.

This application is being returned to the United States Designated/Elected Office for processing in accordance with this decision.

Anthony Smith
Attorney-Advisor
Office of PCT Legal Administration
Tel: (571) 272-3298
Fax: (571) 273-0459

UNITED STATES PATENT AND TRADEMARK OFFICE

COMMISSIONER FOR PATENTS
UNITED STATES PATENT AND TRADEMARK OFFICE
P.O. BOX 1450
ALEXANDRIA, VA 22313-1450
www.uspto.gov

1 8 NOV 2009

BRINKS HOFER GILSON & LIONE
P.O. BOX 10395
CHICAGO, IL 60610

In re Application of BIRD	:	
U.S. Application No.: 12/374,588	:	
PCT Application No.: PCT/AU2007/000864	:	DECISION
Int. Filing Date: 20 June 2007	:	
Priority Date Claimed: 20 June 2006	:	
Attorney Docket No.: (P61243.US)	:	
For: A LARYNGOSCOPE	:	

This is in response to applicant's "Petition for Revival of an International Application for Patent Designating the U.S. Abandoned Unintentionally Under 37 CFR 1.137(b)" filed 21 January 2009.

BACKGROUND

On 20 June 2007, applicant filed international application PCT/AU2007/000864, which claimed priority of an earlier Australia application filed 20 June 2006. A copy of the international application was communicated to the USPTO from the International Bureau on 27 December 2007. The thirty-month period for paying the basic national fee in the United States expired on 22 December 2008.

On 23 December 2008, international application PCT/AU2007/000864 became abandoned as to the United States for failure to timely pay the basic national fee.

On 21 January 2009, applicant filed the present petition under 37 CFR 1.137(b).

DISCUSSION

Under 37 CFR 1.137(b), a petition requesting that an application be revived on the grounds of unintentional abandonment must be accompanied by: (1) the required reply unless previously filed, (2) the petition fee as set forth in 37 CFR 1.17(m), (3) a statement that the entire delay in filing the required reply from the due date for the reply until the filing of a grantable petition was unintentional, and (4) a terminal disclaimer if the application was filed before 08 June 1995.

With regard to item (1), applicant has provided the required reply under 35 U.S.C. 371.

With regard to item (2), applicant has provided the required petition fee.

With regard to item (3), applicant has provided the required statement.

With regard to item (4), because the international application was filed after 08 June 1995, no terminal disclaimer is required.

CONCLUSION

For the reasons above, the petition under 37 CFR 1.137(b) is GRANTED.

This application is being forwarded to the United States Designated/Elected Office (DO/EO/US) for further processing in accordance with this decision, including preparation and mailing of a Notification of Missing Requirements under 35 U.S.C. 371 (Form PCT/DO/EO/905) indicating that an oath or declaration in compliance with 37 CFR 1.497 must be filed.

Bryan Lin
Bryan Lin
PCT Legal Examiner
PCT Legal Office

Telephone: 571-272-3303
Facsimile: 571-273-0459

20 MAR 2009

United States Patent and Trademark Office

Commissioner for Patents
United States Patent and Trademark Office
P.O. Box 1450
Alexandria, VA 22313-1450
www.uspto.gov

NOVO NORDISK, INC.
INTELLECTUAL PROPERTY DEPARTMENT
100 COLLEGE ROAD WEST
PRINCETON NJ 08540

In re Application of	:	
Christiansen	:	
Application No. 12/374,600	:	
PCT No.: PCT/EP2007/057284	:	
Int. Filing Date: 15 July 2007	:	DECISION
Priority Date: 15 July 2006	:	
Att. Docket No.: 7476.504-US	:	
For: A Medical Delivery System With	:	
Flexible Blocking Element	:	

The petition to revive under 37 CFR 1.137(b) filed on 21 January 2009 in the above-captioned application is hereby **GRANTED** as follows:

Petitioner states that "the entire delay in filing the required reply from the due date for the reply until the filing of a grantable petition under 37 CFR 1.137(b) was unintentional." Said statement is being accepted in satisfaction of 37 CFR 1.137(b)(3).

A review of the application file reveals that applicant has paid the petition fee. The required reply in the form of the basic national fee also has been paid. No terminal disclaimer is required. Therefore, the request to revive the application abandoned under 35 U.S.C. 371(d) is granted as to the national stage in the United States of America.

This application is being forwarded to the Office of Patent Application Processing for further processing, including the preparation and mailing of a Notification of Missing Requirements (Form PCT/DO/EO/905) requiring the submission of an oath or declaration compliant with 37 CFR 1.497(a) and (b) and the surcharge under 37 CFR 1.492(h).

/George Dombroske/
George Dombroske
PCT Legal Examiner
Office of PCT Legal Administration
Tel: (571) 272-3283
Fax: (571) 273-0459

UNITED STATES PATENT AND TRADEMARK OFFICE

Commissioner for Patents
United States Patent and Trademark Office
P.O. Box 1450
Alexandria, VA 22313-1450
www.uspto.gov

FENWICK & WEST, LLP
SILICON VALLEY CENTER
801 CALIFORNIA STREET
MOUNTAIN VIEW, CA 94041

MAILED

JUN 02 2010

OFFICE OF PETITIONS

In re Application of	:	
Anqi Chen, et. al.	:	
Application No. 12/374,610	:	DECISION ON PETITION
Filed: September 21, 2009	:	UNDER 37 CFR 1.78(a)(6)
Attorney Docket No. 26999-15213	:	

This is a decision on the petition under 37 CFR 1.78(a)(6), filed April 2, 2010, to accept an unintentionally delayed claim under 35 U.S.C. §119(e) for the benefit of the prior-filed provisional application set forth in the amendment filed with the present petition.

The present petition is not signed by an attorney or agent of record. However, in accordance with 37 CFR 1.34(a), the signature of Andrew T. Serafini appearing on the petition shall constitute a representation to the United States Patent and Trademark Office that he is authorized to represent the particular party in whose behalf he acts.

The petition is **DISMISSED**.

A petition under 37 CFR 1.78(a)(6) is only applicable to those applications filed on or after November 29, 2000. Further, the petition is appropriate only after expiration of the period specified in 37 CFR 1.78(a)(5)(ii) and must be filed during the pendency of the nonprovisional application. In addition, the petition must be accompanied by:

(1) the reference required by 35 U.S.C. § 119(e) and 37 CFR 1.78(a)(5)(i) to the prior-filed application, unless previously submitted;
(2) the surcharge set forth in § 1.17(t); and
(3) a statement that the entire delay between the date the claim was due under 37 CFR 1.78(a)(5)(ii) and the date the claim was filed was unintentional. The Director may require additional information where there is a question whether the delay was unintentional.

The petition does not satisfy item (1) above.

The amendment is not acceptable as drafted since it improperly incorporates by reference the prior-filed application. An incorporation by reference statement added after an application's filing date is not effective because no new matter can be added to an application after its filing date (*see* 35 U.S.C. § 132(a)). If an incorporation by reference statement is included in an amendment to the specification to add a benefit claim under 35 U.S.C. § 119(e) after the filing date of the application, the amendment would not be proper. When a benefit claim under 35 U.S.C. § 119(e) is submitted after the filing of an application, the reference to the prior application cannot include an incorporation by reference statement of the prior application. *See* Dart Industries v. Banner, 636 F.2d 684, 207 USPQ 273 (C.A.D.C. 1980). *Note* MPEP §§ 201.06(c) and 608.04(b).

Accordingly, before the petition under 37 CFR 1.78(a)(6) can be granted, a renewed petition under 37 CFR 1.78(a)(6) and either an Application Data Sheet or a substitute amendment (complying with 37 CFR 1.121 and 37 CFR 1.76(b)(5)) deleting the incorporation by reference statement, are required.

Further correspondence with respect to this matter should be addressed as follows:

By mail: Mail Stop PETITIONS
Commissioner for Patents
Post Office Box 1450
Alexandria, VA 22313-1450

By hand: Customer Service Window
Mail Stop Petitions
Randolph Building
401 Dulany Street
Alexandria, VA 22314

By fax: (571) 273-8300
ATTN: Office of Petitions

Any questions concerning this matter may be directed to the undersigned at (571) 272-3226.

Andrea Smith
Petitions Examiner
Office of Petitions

UNITED STATES PATENT AND TRADEMARK OFFICE

Commissioner for Patents
United States Patent and Trademark Office
P.O. Box 1450
Alexandria, VA 22313-1450
www.uspto.gov

05 MAR 2009

Saul Ewing LLP (Philadelphia)
Attn: Patent Docket Clerk
2 North Second St.
Harrisburg PA 17101

In re Application of HAUSSLER	:	
Application No.: 12/374,673	:	
PCT No.: PCT/EP07/56297	:	DECISION ON
Int. Filing: 25 June 2007	:	
Priority Date: 01 July 2006	:	PETITION TO REVIVE
Attorney Docket No.: 357123.00020	:	
For: DEVICE FOR SELECTION OF LIGHT IN A REFRACTION ARRANGEMENT	:	UNDER 37 CFR 1.137(b)

The petition to revive under 37 CFR 1.137(b) filed 22 January 2009 in the above-captioned application is hereby **GRANTED** as follows:

Applicant's statement that the"entire delay in filing the required reply from the due date for the required reply until the filing of a grantable petition under 37 CFR 1.137(b) was unintentional" meets the requirements of 37 CFR 1.137(b)(3).

A review of the application file reveals that the basic national fee of $330 has now been provided. The required petition fee of $1620 was also paid. Thus, the requirements of 37 CFR 1.137(b) have been satisfied. Therefore, the request to revive the application abandoned under 35 U.S.C. 371(d) is granted as to the National stage in the United States of America.

This application is being forwarded to the United States Designated/Elected Office for further processing, including issuance of a Notification of Missing Requirements indicating that an oath or declaration, in compliance with 37 CFR 1.497(a) and (b), the surcharge for filing the oath or declaration and the processing fee for filing the English translation of the international application after the thirty month period , is required.

Cynthia M. Kratz

Cynthia M. Kratz
Attorney Advisor
PCT Legal Office
Office of PCT Legal Administration
Telephone: (571) 272-3286
Facsimile: (571) 273-0459

UNITED STATES PATENT AND TRADEMARK OFFICE

3 0 JAN 2009

Commissioner for Patents
United States Patent and Trademark Office
P.O. Box 1450
Alexandria, VA 22313-1450
www.uspto.gov

Themis Law
7660 Fay Ave Ste H535
La Jolla CA 92037

In re Application of	:	
GIUFFRE'	:	
U.S. Application No.: 12/374,677	:	DECISION ON PETITION
PCT No.: PCT/EP07/56520	:	
Int. Filing Date: 28 June 2007	:	UNDER 37 CFR 1.137(b)
Priority Date: 10 July 2006	:	
Attorney Docket No.: 09SKF103	:	
For: SELF COMPENSATED, ADJUSTABLE FLUID	:	
EMITTER, PARTICULARLY IN IRRIGATION	:	
SYSTEMS	:	

The petition to revive under 37 CFR 1.137(b) filed 22 January 2009 in the above-captioned application is hereby **GRANTED** as follows:

Applicant's statement that "the entire delay in filing the required reply from the due date for the required reply until the filing of a grantable petition under 37 CFR 1.137(b) was unintentional" and the prompt filing of the petition satisfies the requirement of 37 CFR 1.137(b)(3).

A review of the application file reveals that applicant has now provided payment of the full, U.S. Basic National fee and the requirements of 37 CFR 1.137(b) have been satisfied. Therefore, the request to revive the application abandoned under 35 U.S.C. 371(d) is granted as to the National stage in the United States of America.

This application is being forwarded to the United States Designated/Elected Office (US/DO/EO) for continued processing including the issuance of a Notification of Missing Requirements (Form PCT/DO/EO/905) indicating that a compliant, executed oath or declaration of the inventor is required.

Derek A. Putonen
Attorney Advisor
Office of PCT Legal Administration
Tel: (571) 272-3294
Fax: (571) 273-0459

2 9 MAR 2010

UNITED STATES PATENT AND TRADEMARK OFFICE

Commissioner for Patents
United States Patent and Trademark Office
P.O. Box 1450
Alexandria, VA 22313-1450
www.uspto.gov

YOUNG & THOMPSON
209 Madison Street
Suite 500
Alexandria VA 22314

In re Application of:	:	
MCCLENAGHAN, Ian, Bruce, et al.	:	
U.S. Application No.: 12/374,684	:	DECISION
PCT No.: PCT/AU2006/001672	:	
International Filing Date: 10 November 2006	:	
Priority Date: 08 August 2006	:	
Attorney Docket No.: 6006-1020	:	
For: LIFTING GRAB	:	

This decision is issued in response to the materials filed on 19 January 2010, treated herein under 37 CFR 1.47(a). Pursuant to the previously filed authorization, Deposit Account No. 25-0120 will be charged the required $200 petition fee and $65 extension fee.

BACKGROUND

On 10 November 2006, applicants filed international application PCT/AU2006/001672. The international application claimed a priority date of 08 August 2006, and it designated the United States. On 14 February 2008, the International Bureau (IB) communicated a copy of the international application to the United States Patent and Trademark Office (USPTO). The deadline for submission of the basic national fee was thirty months from the priority date, i.e., 08 February 2009.

On 22 January 2009, applicants filed a Transmittal Letter for entry into the national stage in the United States accompanied by, among other materials, payment of the small entity basic national fee.

On 16 October 2009, the United States Designated/Elected Office (DO/EO/US) mailed a Notification Of Missing Requirement (Form PCT/DO/EO/905) stating that an oath or declaration in compliance with 37 CFR 1.497 was required.

On 19 January 2010, applicants filed a partially executed declaration and the materials considered herein as a petition under 37 CFR 1.47(a) for acceptance of the declaration without the signature of co-inventor Matthew Noel Schaeffer. Deposit Account No. 25-0120 will be charged the extension fee required for this submission to be considered a timely response to the Notification Of Missing Requirements, as necessary to avoid abandonment of the present application.

DISCUSSION

A grantable petition under 37 CFR 1.47(a) must be accompanied by: (1) the fee under 37 CFR 1.17; (2) a statement of the last known address of the non-signing inventor; (3) an oath or declaration executed by the other inventors on behalf of themselves and the non-signing inventor; and (4) factual proof that the inventor refuses to execute the application or cannot be reached after diligent effort.

Applicants here have previously authorized a charge to Deposit Account No. 25-0120 for required fees, pursuant to which the Deposit Account will be charged the $200 petition fee. Item (1) is therefore satisfied.

Regarding item (2), the statement of Australian solicitor Selwyn Eric Hegney filed 19 January 2010 sets forth the address for the non-signing inventor. Item (2) is therefore satisfied.

Regarding item (3), section 409.03(a) of the Manual of Patent Examining Practice (MPEP) states that:

> An oath or declaration signed by all the available joint inventors with the signature block of the nonsigning inventor(s) left blank may be treated as having been signed by all the joint inventors on behalf of the nonsigning inventor(s), unless otherwise indicated.

Here, applicants have filed a declaration executed by one of the two inventors of record, and the declaration includes a signature block for the non-signing inventor, Matthew Noel SCHAEFFER. However, the signature block for the non-signing inventor has not been left blank; rather, somebody has written in the signature block: "Will Not Sign-Hostile – Pls. Refer To Solicitor's Stat Declaration." It is not clear who wrote this statement and whether it was added prior to the execution of the declaration by inventor Ian Bruce MCCLENAGHAN. Under these circumstances, the declaration can not be interpreted as having been executed by the signing inventor on his own behalf and on behalf of the non-signing inventor. Accordingly, item (3) of a grantable petition is not satisfied on the present record.

Regarding item (4), the statement of Australian solicitor Selwyn Eric Hegney filed 19 January 2010 indicates that the non-signing inventor has refused to execute the declaration herein; however, applicants' 19 January 2010 submission does not include a statement signed by a practitioner registered to practice before the USPTO expressly asserting that the non-signing inventor has refused to execute the declaration or cannot be located after diligent effort. In addition, MPEP section 409.03(d) states that, before it can be concluded that an inventor has refused to execute the application papers, "[a] copy of the application papers should be sent to the last known address of the nonsigning inventor, or, if the nonsigning inventor is represented by counsel, to the address of the nonsigning inventor's attorney." The MPEP also states the following:

> Where a refusal of the inventor to sign the application papers is alleged, the circumstances of the presentation of the application papers and of the refusal must be specified in a statement of facts by the person who presented the inventor with the application papers and/or to whom the refusal was made.

> Statements by a party not present when an oral refusal is made will not be accepted.

Here, Mr. Hegney's statement, with supporting documents, provides firsthand evidence that a request for signature was delivered to the non-signing inventor, and that the inventor later indicated that he would not be signing additional documents. However, it is not clear from the present submission whether a copy of the complete application was included in the materials provided to the non-signing inventor, as required before it can be concluded that the applicant has refused to execute the present application. In view of the above, the present record does not include an acceptable assertion and showing that the non-signing inventor has refused to execute the application. Item (4) of a grantable petition is therefore not satisfied on the present record.

CONCLUSION

Applicants' petition under 37 CFR 1.47(a) is **DISMISSED** without prejudice.

If reconsideration on the merits of the petition is desired, a proper response must be filed within **TWO (2) MONTHS** of the mail date of the present decision. Any request for reconsideration should include a cover letter entitled "Renewed Petition Under 37 CFR 1.47(a)" and must include the additional materials required to satisfy items (3) and (4) of a grantable petition, as discussed above and in the MPEP. No additional petition fee is required.

Failure to file a proper response will result in abandonment of the application. Extensions of time are available under 37 CFR 1.136(a)

Please direct further correspondence with respect to this matter to Mail Stop PCT, Commissioner for Patents, P.O. Box 1450, Alexandria, Virginia 22313-1450, with the contents of the letter marked to the attention of the Office of PCT Legal Administration.

Richard M. Ross
Attorney Advisor
Office of PCT Legal Administration
Telephone: (571) 272-3296
Facsimile: (571) 273-0459

UNITED STATES PATENT AND TRADEMARK OFFICE

25 JUN 2010

Commissioner for Patents
United States Patent and Trademark Office
P.O. Box 1450
Alexandria, VA 22313-1450
www.uspto.gov

YOUNG & THOMPSON
209 Madison Street
Suite 500
Alexandria VA 22314

In re Application of:	:	
MCCLENAGHAN, Ian, Bruce, et al.	:	
U.S. Application No.: 12/374,684	:	DECISION ON RENEWED PETITION
PCT No.: PCT/AU2006/001672	:	
International Filing Date: 10 November 2006	:	
Priority Date: 08 August 2006	:	
Attorney Docket No.: 6006-1020	:	
For: LIFTING GRAB	:	

This decision is issued in response to applicants' "Renewed Petition Under 37 CFR 1.47(a)" filed 01 June 2010. No additional petition fee is required.

BACKGROUND

The procedural background for the present application was set forth in the decision mailed 29 March 2010. The decision dismissed without prejudice applicants' petition under 37 CFR 1.47(a) for failure to satisfy all the requirements of a grantable petition. Specifically, applicants had failed to provide an acceptable declaration executed by the cooperating inventor and an acceptable showing that a copy of the complete application was included with the signature request forwarded to the non-signing inventor.

On 01 June 2010, applicants filed the renewed petition considered herein.

DISCUSSION

The renewed petition filed by applicants on 01 June 2010 2009 was accompanied by a revised declaration executed by co-inventor Ian Bruce MCCLENAGHAN. The declaration includes an unsigned signature block for the non-signing inventor, Matthew Noel SCHAEFFER. This declaration may be accepted as being executed by the signing inventor on his own behalf and on behalf of the non-signing inventor. Applicants have therefore now satisfied the declaration requirement of a grantable petition.

The renewed petition also includes a statement, with accompanying exhibits, confirming that a signature request, accompanied by a copy of the complete application, was delivered to the non-signing inventor, and that the non-signing inventor has not provided the requested signature in response to such request. These materials, in combination with those filed with the original

petition, provide an acceptable showing that the non-signing inventor has refused to execute the declaration.

In view of the above, applicants have now satisfied the final outstanding requirements of a grantable petition under 37 CFR 1.47(a). Accordingly, the renewed petition is appropriately granted.

CONCLUSION

Applicants' renewed petition under 37 CFR 1.47(a) is **GRANTED**.

The application is accepted without the signature of non-signing co-inventor Matthew Noel SCHAEFFER.

A notice of the acceptance of the application will be published in the Official Gazette, and a letter informing the non-signing inventor of the application will be forwarded to the address of the non-signing inventor, as set forth in the petition.

The application is being referred to the National Stage Processing Branch of the Office of PCT Operations for further processing. The date under 35 U.S.C. 371(c)(1), (c)(2), and (c)(4) is 01 June 2010.

Richard M. Ross
Attorney Advisor
Office of PCT Legal Administration
Telephone: (571) 272-3296
Facsimile: (571) 273-0459

UNITED STATES PATENT AND TRADEMARK OFFICE

25 JUN 2010

Commissioner for Patents
United States Patent and Trademark Office
P.O. Box 1450
Alexandria, VA 22313-1450
www.uspto.gov

Matthew Noel SCHAEFFER
8 McCannas Road
Armidale, New South Wales 2350
AUSTRALIA

In re Application of: MCCLENAGHAN, Ian, Bruce, et al.
U.S. Application No.: 12/374,684
PCT No.: PCT/AU2006/001672
International Filing Date: 10 November 2006
Priority Date: 08 August 2006
Attorney Docket No.: 6006-1020
For: LIFTING GRAB

Dear Mr. SCAHEFFER:

You are identified as an inventor in the above identified United States patent application, filed under the provisions of 37 CFR 1.47(a) and 35 U.S.C. 116. Should a patent be granted, you will be designated as an inventor.

As a named inventor, you are entitled to inspect any paper in the file wrapper of the application, order copies of all or any part thereof (at a prepaid cost per 37 CFR 1.19) or to make your position of record in the application. Alternatively, you may arrange to do any of the preceding through a registered patent agent or attorney presenting written authorization from you. If you care to join the application, counsel of record (see below) would presumably assist you. Joining in the application would entail the filing of an appropriate oath or declaration by you pursuant to 37 CFR 1.63.

Richard M. Ross
Attorney Advisor
Office of PCT Legal Administration
Telephone: (571) 272-3296
Facsimile: (571) 273-0459

Counsel Of Record:
YOUNG & THOMPSON
209 Madison Street
Suite 500
Alexandria VA 22314

UNITED STATES PATENT AND TRADEMARK OFFICE

Commissioner for Patents
United States Patent and Trademark Office
P.O. Box 1450
Alexandria, VA 22313-1450
www.uspto.gov

1 9 JAN 2010

MICHAEL BEST & FRIEDRICH LLP
100 EAST WISCONSIN AVENUE
MILWAUKEE WI 53202

In re Application of	:	
MOECKLIN et al.	:	
Application No.: 12/374,689	:	DECISION
PCT No.: PCT/EP2007/060372	:	
Int. Filing Date: 01 October 2007	:	
Priority Date: 21 November 2006	:	
Attorney's Docket No.: 022862-1177-US00	:	
For: ELECTROMECHANICAL DRIVING DEVICE	:	
FOR USE IN A TAILGATE OF A MOTOR VEHICLE	:	

This decision is in response to applicant's petition under 37 CFR 1.182 filed 07 October 2009.

BACKGROUND

On 22 January 2009, applicants filed national stage papers in the United States Designated/Elected Office (DO/EO/US) electronically via EFS-Web. The submission included, *inter alia*, a Transmittal Letter, an Application Data Sheet (ADS) and a declaration of inventors. The international application number keyed into EFS-Web was PCT/US07/60372. However, the Transmittal Letter, the ADS, and the declaration of inventors indicated the international application number as PCT/EP2007/060372. Additionally, the title, the inventors, and the international filing date listed on the Transmittal Letter, ADS, and declaration do not correspond to PCT/US2007/060372.

On 21 September 2009, a Notification was mailed indicating that a petition under 37 CFR 1.182, including the petition fee set forth in 37 CFR 1.17(h), to correct the above-stated error regarding the international application number was required.

On 07 October 2009, applicants submitted the instant petition under 37 CFR 1.182.

DISCUSSION

A review of the application file including counsel's statements in the instant submission reveals that the present application should in fact be the national stage application of international application **PCT/EP2007/060372**.

The Notification mailed 21 September 2009 inadvertently indicated the fee required as that under 37 CFR 1.17(h) ($130). However, the actual fee due is that under 37 CFR 1.17(h) ($400). The difference has been charged to Deposit Account 13-3080.

CONCLUSION

For the reasons set forth above, the petition under 37 CFR 1.182 is **GRANTED**.

This application is being forwarded to the National Stage Processing Branch of the Office of PCT Operations to continue national stage processing of the application.

/Daniel Stemmer/

Daniel Stemmer
Legal Examiner
PCT Legal Affairs
Office of Patent Cooperation Treaty
Legal Administration
Telephone: (571) 272-3301

UNITED STATES PATENT AND TRADEMARK OFFICE

SEP 0 3 2009 SEP . 0 2009

Commissioner for Patents
United States Patent and Trademark Office
P.O. Box 1450
Alexandria, VA 22313-1450
www.uspto.gov

GREENBLUM & BERNSTEIN, P.L.C.
1950 ROLAND CLARKE PLACE
RESTON VA 20191

In re Application of	:	
Yoshida, Tadaaki	:	DECISION ON REQUEST TO
Application No. 12/374,726	:	PARTICIPATE IN PATENT
Filed: 01/22/2009	:	PROSECUTION HIGHWAY
Attorney Docket No. P35876	:	PROGRAM AND PETITION
	:	TO MAKE SPECIAL UNDER
	:	37 CFR 1.102(d)

This is a decision on the request to participate in the Patent Prosecution Highway (PPH) program and the petition under 37 CFR 1.102(d), filed June 23, 2009, to make the above-identified application special.

The request and petition are **GRANTED**.

A grantable request to participate in the PPH program and petition to make special require:

(1) The U.S. application must validly claim priority under 35 U.S.C. 119(a) to one or more applications filed in the JPO;
(2) Applicant must submit a copy of the allowable/patentable claim(s) from the JPO application(s) along with an English translation thereof and a statement that the English translation is accurate;
(3) All the claims in the U.S. application must sufficiently correspond or be amended to sufficiently correspond to the allowable/patentable claim(s) in the JPO application(s);
(4) Examination of the U.S. application has not begun;
(5) Applicant must submit a copy of all the office actions from each of the JPO application(s) containing the allowable/patentable claim(s) along with an English translation thereof and a statement that the English translation is accurate;
(6) Applicant must submit an IDS listing the documents cited by the JPO examiner in the JPO office action along with copies of documents except U.S. patents or U.S. patent application publications; and
(7) The required petition fee under 37 CFR 1.17(h).

The request to participate in the PPH program and petition comply with the above requirements. Accordingly, the above-identified application has been accorded "special" status.

Telephone inquiries concerning this decision should be directed to Ram R. Shukla at 571-272-0735.

All other inquiries concerning the examination or status of the application should be directed to Patent Application Information Retrieval (PAIR) system at the http://www.uspto.gov/ebc/index.html.

The application is being forwarded to the examiner for action on the merits commensurate with this decision.

Ram R. Shukla, Ph.D.
Supervisory Patent Examiner
TC 1600

RAM R. SHUKLA, PH.D.
SUPERVISORY PATENT EXAMINER

UNITED STATES PATENT and TRADEMARK OFFICE

19 FEB 2010

COMMISSIONER FOR PATENTS
UNITED STATES PATENT AND TRADEMARK OFFICE
P.O BOX 1450
ALEXANDRIA, VA 22313-1450
www.uspto.gov

Steven C. Bauman
Henkel Corporation
1001 Trout Brook Crossing
Rocky Hill, CT 06067 USA

In re Application of	:	DECISION ON
Alfred A. DECATO	:	
Application No.: 12/374,761	:	
PCT No.: PCT/US2007/015046	:	
Int. Filing Date: 28 June 2007	:	PETITION UNDER
Priority Date: 07 July 2006	:	
Attorney's Docket No.: LC-570/PCT/US	:	
For: LOW MODULES, HUMIDITY...	:	
PREPARING SAME	:	37 CFR 1.137(b)

This decision is in response to applicant's "PETITION FOR REVIVAL OF AN APPLICATION FOR PATENT DESIGNATING THE U.S. ABANDONED UNINTENTIONALLY UNDER 37 C.F.R. 1.137(b)," filed on 22 January 2009.

BACKGROUND

On 28 June 2007, this international application was filed, claiming an earliest priority date of 07 July 2006.

The deadline for paying the basic national fee in the United States under 35 U.S.C. 371 and 37 CFR 1.495 was 07 January 2009. This international application became abandoned with respect to the United States at midnight on 07 January 2009 for failure to pay the required basic national fee.

On 22 January 2009, applicant filed the instant petition under 37 CFR 1.137(b) and a Transmittal letter for entry into the national stage in the United States, which was accompanied by the basic national fee, the petition fee, and an executed declaration.

DISCUSSION

A grantable petition to revive an abandoned application under 37 CFR 1.137(b) must be accompanied by (1) the required reply, unless previously filed. In a nonprovisional application abandoned for failure to prosecute, the required reply may be met by the filing of a continuing application; (2) the petition fee as set forth in § 1.17(m); and (3) a statement that the entire delay in filing the required reply from the due date for the reply until the filing of a grantable petition pursuant to this paragraph was unintentional. The Commissioner may require additional information where there is a question whether the delay was unintentional; and (4) any terminal disclaimer (and fee as set forth in § 1.20 (d)) required pursuant to paragraph (c) of this section.

Petitioner has provided: (1) the proper reply by submitting the basic national filing fee, (2) the petition fee set forth in §1.17(m) and (3) the proper statement under 137(b)(3). In this application, no terminal disclaimer is required.

Accordingly, the petition is deemed to satisfy requirements (1), (2), (3), and (4) under 37 CFR 1.137(b).

DECISION

The petition under 37 CFR 1.137(b) is **GRANTED**.

This application is being returned to the United States Designated/Elected Office (DO/EO/US) for continued processing. The 35 USC 371(c)(1), (c)(2), and (c)(4) date of this application is **22 January 2009**.

Rafael Bacares
PCT Legal Examiner
PCT Legal Office
Telephone: (571) 272-3276
Facsimile: (571) 273-0459

UNITED STATES PATENT AND TRADEMARK OFFICE

Commissioner for Patents
United States Patent and Trademark Office
P.O. Box 1450
Alexandria, VA 22313-1450
www.uspto.gov

FOLEY AND LARDNER LLP
SUITE 500
3000 K STREET NW
WASHINGTON DC 20007

COPY MAILED
JAN 13 2010

In re Application of	:	
Achim Müller et al.	:	DECISION ON PETITION
Application No. 12/374,772	:	TO WITHDRAW
Filed: November 6, 2009	:	FROM RECORD
Attorney Docket No. **085449-0214**	:	

This is a decision on the request to withdraw as attorney of record under 37 CFR § 1.36(b), filed November 24, 2009.

The request is **NOT APPROVED**.

The request cannot be approved because it lacks the name of the first inventor or the assignee of record that is associated with the address listed in the request. Therefore, the change of correspondence address is considered improper.

The Office will only accept correspondence address changes to the most current address information provided for the assignee of the entire interest *who properly became of record under 37 CFR 3.71,* or, if no assignee of the entire interest has properly been made of record, the most current address information provided for the first named inventor. 37 CFR 3.71(c) states:

> *An assignee becomes of record either in a national patent application or a reexamination proceeding by filing a statement in compliance with § 3.73(b) that is signed by a party who is authorized to act on behalf of the assignee.*

The assignee must establish its ownership of the patent to the satisfaction of the Director. In this regard, the statement under 37 CFR 3.73(b) must have either: (i) documentary evidence of a chain of title from the original owner to the assignee (*e.g.*, copy of an executed assignment), and a statement affirming that the documentary evidence of the chain of title from the original owner to the assignee was or concurrently is being submitted for recordation pursuant to § 3.11; or (ii) a statement specifying where documentary evidence of a chain of title from the original owner to the assignee is recorded in the assignment records of the Office (*e.g.*, reel and frame number).

All future communications from the Office will continue to be directed to the above-listed address until otherwise notified by applicant.

Telephone inquires concerning this decision should be directed to the undersigned at (571) 272-4584.

JoAnne Burke
Petitions Examiner
Office of Petitions

UNITED STATES PATENT AND TRADEMARK OFFICE

Commissioner for Patents
United States Patent and Trademark Office
P.O. Box 1450
Alexandria, VA 22313-1450
www.uspto.gov

19 JAN 2010

MATHEWS, SHEPHERD, MCKAY, & BRUNEAU, P.A.
29 THANET ROAD, SUITE 201
PRINCETON NJ 08540

In re Application of	:	
FONTANA et al.	:	DECISION ON
Application No.: 12/374,799	:	
PCT No.: PCT/EP2007/006218	:	PAPERS
Int. Filing Date: 12 July 2007	:	
Priority Date: 26 July 2006	:	UNDER 37 CFR 1.42
Attorney's Docket No.: 833-179 US	:	
For: CAMPTOTHECIN DERIVATIVES WITH	:	
ANTITUMOR ACTIVITY	:	

This is a decision on applicants' submission filed in the United States Patent and Trademark Office (USPTO) on 08 June 2009, which was accompanied by a declaration of the inventors. The indication in this declaration that inventor Arturo Battaglia is deceased has been treated as a request for status under 37 CFR 1.42.

BACKGROUND

On 12 July 2007, applicants filed international application PCT/EP2007/006218, which designated the United States and claimed a priority date of 26 July 2006. A copy of the international application was communicated to the United States Patent and Trademark Office (USPTO) from the International Bureau on 31 January 2008. The thirty-month period for paying the basic national fee in the United States expired at midnight on 26 January 2009.

On 23 January 2009, applicants filed a transmittal letter for entry into the national stage in the United States accompanied by, *inter alia*, the basic national fee.

On 08 April 2009, the United States Designated/Elected Office (DO/EO/US) mailed a NOTIFICATION OF MISSING REQUIREMENTS UNDER 35 U.S.C. 371 (Form PCT/DO/EO/905) indicating, *inter alia*, that an executed oath or declaration in compliance with 37 CFR 1.497(a)-(b) was required.

On 08 June 2009, applicants filed a submission which was accompanied by, *inter alia*, a declaration of the inventors. The indication in the declaration that inventor Arturo Battaglia is

deceased has been treated as a request for status under 37 CFR 1.42.

On 30 November 2009, the DO/EO/US mailed a NOTICE OF ACCEPTANCE OF APPLICATION UNDER 35 U.S.C. 371 AND 37 CFR 1.495 (Form PCT/DO/EO/909) according the application both a 35 U.S.C. 371(c)(1), (c)(2), and (c)(4) date and a 35 U.S.C. 371 date of 08 June 2009.

DISCUSSION

The submission filed 08 June 2009 has been reviewed and has been found in compliance with 37 CFR 1.42. The declaration filed 08 June 2009 is in compliance with 37 CFR 1.497(a)-(b).

CONCLUSION

For the above reasons, the request for status under 37 CFR 1.42 is **ACCEPTED**.

Although the NOTICE OF ACCEPTANCE OF APPLICATION mailed 30 November 2009 was mailed before the request for status under 37 CFR 1.42 was decided, it does include the correct 35 U.S.C. 371(c)(1), (c)(2), and (c)(4) date and 35 U.S.C. 371 dates and is hereby affirmed.

This application is being forwarded to the Technology Center.

/Daniel Stemmer/

Daniel Stemmer
Legal Examiner
PCT Legal Affairs
Office of Patent Cooperation Treaty
Legal Administration
Telephone: (571) 272-3301

- 5 FEB 2010

United States Patent and Trademark Office

Commissioner for Patents
United States Patent and Trademark Office
P.O. Box 1450
Alexandria, VA 22313-1450
www.uspto.gov

KRATZ, QUINTOS & HANSON, LLP
1420 K Street, N.W.
Suite 400
WASHINGTON DC 20005

In re Application of Go et al. Application No.: 12/374,806 PCT No.: PCT/JP2007/064465 Int. Filing Date: 23 July2007 Priority Date: 28 July 2006 Attorney Docket No.: 090024 For: Constant-Volume Dispenser	:	DECISION

This is in response to the correspondence filed on 25 November 2009.

BACKGROUND

This international application was filed on 23 July 2007, claimed an earlier priority date of 28 July 2006, and designated the U.S. The International Bureau transmitted a copy of the published international application to the USPTO on 31 January 2008. The 30 month time period for paying the basic national fee in the United States expired at midnight on 28 January 2009. Applicants filed *inter alia* the basic national fee on 23 January 2009.

On 08 September 2009, a Notification of Missing Requirements (Form PCT/DO/EO/905) was mailed to applicants, requiring the submission of an oath or declaration compliant with 37 CFR 1.497(a) and (b).

DISCUSSION

Inspection of the declaration filed on 25 November 2009 reveals that it is a dual-language declaration not made on a USPTO-supplied form. It does not appear to be accompanied by the statement required under 37 CFR 1.69(b).

In addition, the declaration nominates "WU, Men-dar" in place of "GO, Mendwu" named in the published international application. Counsel characterizes this discrepancy as a "spelling error," but the discrepancy appears to represent more than a mere spelling error. Petitioner is required to clarify the nature of the error. Under the policy described at MPEP 1893.01(e), 605.04(b) and 605.04(c), a formal petition (and fee) would be required in order for the name appearing on the declaration to be accepted, if the error was more than a mere typographical or transliteration error. Further clarification and, if appropriate, such a petition are required.

DECISION

The declaration is **NOT ACCEPTED**, without prejudice.

Any request for reconsideration must be filed within **TWO (2) MONTHS** of the mailing date of this Decision, extendable under 37 CFR 1.136(a). Failure to timely reply will result in **ABANDONMENT**.

Any further correspondence with respect to this matter may be filed electronically via EFS-Web selecting the document description "Petition for review and processing by the PCT Legal Office" or by mail addressed to Mail Stop PCT, Commissioner for Patents, Office of PCT Legal Administration, P.O. Box 1450, Alexandria, Virginia 22313-1450, with the contents of the letter marked to the attention of the Office of PCT Legal Administration.

/George Dombroske/
George Dombroske
PCT Legal Examiner
Office of PCT Legal Administration
Tel: (571) 272-3283

UNITED STATES PATENT AND TRADEMARK OFFICE

Commissioner for Patents
United States Patent and Trademark Office
P.O. Box 1450
Alexandria, VA 22313-1450
www.uspto.gov

1 8 MAR 2009

Philips Intellectual Property & Standards
P.O. Box 3001
Briarcliff Manor, NY 10510

In re Application of VAN WOEZIK et al. Application No.: 12/374,822 PCT No.: PCT/IB06/53749 Int. Filing Date: 12 October 2006 Priority Date: 19 October 2005 Attorney Docket No.001680US1 For: X-RAY EXAMINATION APPARATUS	: : : : : : : :	DECISION ON PETITION UNDER 37 CFR 1.137(b)

The petition to revive under 37 CFR 1.137(b) filed 23 January 2009 in the above-captioned application is hereby **GRANTED** as follows:

Applicant's statement that "the entire delay in filing the required reply from the due date for the reply until the filing of a grantable petition under 37 CFR 1.137(b) was unintentional" meets the requirements of 37 CFR 1.137(b)(3).

A review of the application file reveals that applicant has submitted the basic national fee and the requirements of 37 CFR 1.137(b) have been satisfied. Therefore, the request to revive the application abandoned under 35 U.S.C. 371(d) is granted as to the National stage in the United States of America.

This application is being returned to the United States Designated/Elected Office for processing in accordance with this decision.

Anthony Smith
Attorney-Advisor
Office of PCT Legal Administration
Tel: (571) 272-3298
Fax: (571) 273-0459

UNITED STATES PATENT AND TRADEMARK OFFICE

UNITED STATES DEPARTMENT OF COMMERCE
United States Patent and Trademark Office
Address: COMMISSIONER FOR PATENTS
P.O. Box 1450
Alexandria, Virginia 22313-1450
www.uspto.gov

APPLICATION NO.	FILING DATE	FIRST NAMED INVENTOR	ATTORNEY DOCKET NO.	CONFIRMATION NO.
12/374,869	01/23/2009	Ryuichi Okamoto	2009-0059A	2683

52349 7590 06/24/2009
WENDEROTH, LIND & PONACK L.L.P.
1030 15th Street, N.W.
Suite 400 East
Washington, DC 20005-1503

EXAMINER

ART UNIT	PAPER NUMBER
2431	

MAIL DATE	DELIVERY MODE
06/24/2009	PAPER

Please find below and/or attached an Office communication concerning this application or proceeding.

The time period for reply, if any, is set in the attached communication.

UNITED STATES PATENT AND TRADEMARK OFFICE

Commissioner for Patents
United States Patent and Trademark Office
P.O. Box 1450
Alexandria, VA 22313-1450
www.uspto.gov

MAIL

JUN 24 2009

DIRECTOR OFFICE
TECHNOLOGY CENTER 2600

WENDEROTH, LIND & PONACK L.L.P.
1030 15th Street, N.W.
Suite 400 East
Washington DC 20005-1503

In re Application of: Ryuichi **OKAMOTO** et al.
Application No. 12/374,869
Filed: January 23, 2009

For: **TERMINAL DEVICE, SERVER DEVICE, AND CONTENT DISTRIBUTION SYSTEM**

DECISION ON REQUEST TO PARTICIPATE IN PATENT PROSECUTION HIGHWAY PROGRAM AND PETITION TO MAKE SPECIAL UNDER 37 CFR 1.102(d)

This is a decision on the request to participate in the Patent Prosecution Highway (PPH) program and the petition under 37 CFR 1.102(d), filed January 23, 2009, to make the above-identified application special.

The petition is **GRANTED.**

A grantable request to participate in the PPH program and petition to make special require:

(1) The U.S. application must validly claim priority under 35 U.S.C. 119(a) to one or more applications filed in the JPO;

(2) Applicant must submit a copy of the allowable/patentable claim(s) from the JPO application(s) along with an English translation thereof and a statement that the English translation is accurate;

(3) All the claims in the U.S. application must sufficiently correspond or be amended to sufficiently correspond to the allowable/patentable claim(s) in the JPO application(s);

(4) Examination of the U.S. application has not begun;

(5) Applicant must submit a copy of the latest office actions (other than "Decision to Grant a Patent") from each of the JPO application(s) containing the allowable/patentable claim(s) along with an English translation thereof and a statement that the English translation is accurate;

(6) Applicant must submit an IDS listing the documents cited by the JPO examiner in the JPO office action along with copies of documents except U.S. patents or U.S. patent application publications; and

(7) The required petition fee under 37 CFR 1.17(h).

The request to participate in the PPH program and petition are found to comply with the above requirements. Accordingly, the above-identified application has been accorded "special" status.

Telephone inquiries concerning this decision should be directed to Ricky Ngo 571-272-3139.

All other inquiries concerning the examination or status of the application is accessible in the PAIR system at http://www.uspto.gov/ebc/index.html.

The application is being forwarded to the examiner for action on the merits commensurate with this decision.

/Ricky Ngo/

Ricky Ngo
Supervisory Patent Examiner, Technology Center 2400
571-272-3139

19 MAR 2009

United States Patent and Trademark Office

Commissioner for Patents
United States Patent and Trademark Office
P.O. Box 1450
Alexandria, VA 22313-1450
www.uspto.gov

CARTER, DELUCA, FARRELL & SCHMIDT, LLP
445 BROAD HOLLOW ROAD
SUITE 420
MELVILLE NY 11747

In re Application of	:	
Daley	:	
Application No. 12/374,896	:	
PCT No.: PCT/AU2007/001005	:	
Int. Filing Date: 19 July 2007	:	DECISION
Priority Date: 21 July 2006	:	
Att. Docket No.: 1756-2PCTUS (P27421USPC)	:	
For: A Connector Arrangement	:	

The petition to revive under 37 CFR 1.137(b) filed on 23 January 2009 in the above-captioned application is hereby **GRANTED** as follows:

Petitioner states that "the entire delay in filing the required reply from the due date for the required reply until the filing of a grantable petition under 37 CFR 1.137(b) was unintentional." Said statement is being accepted in satisfaction of 37 CFR 1.137(b)(3).

A review of the application file reveals that applicant has paid the petition fee. The required reply in the form of the basic national fee also has been paid. No terminal disclaimer is required. Therefore, the request to revive the application abandoned under 35 U.S.C. 371(d) is granted as to the national stage in the United States of America.

This application is being forwarded to the Office of Patent Application Processing for further processing, including the preparation and mailing of a Notification of Missing Requirements (Form PCT/DO/EO/905) requiring the submission of an oath or declaration compliant with 37 CFR 1.497(a) and (b) and the surcharge under 37 CFR 1.492(h).

/George Dombroske/
George Dombroske
PCT Legal Examiner
Office of PCT Legal Administration
Tel: (571) 272-3283
Fax: (571) 273-0459

UNITED STATES PATENT AND TRADEMARK OFFICE

Commissioner for Patents
United States Patent and Trademark Office
P.O. Box 1450
Alexandria, VA 22313-1450
www.uspto.gov

PARK LAW FIRM
3255 WILSHIRE BLVD
SUITE 1110
LOS ANGELES CA 90010

2/5/09

In re Application of: KIM, CHAN-SOO Serial No.: 12/374,990 Filed: Jan. 23, 2009 Docket: n/a Title: HAIR CLIP FOR BEAUTY SHOP	DECISION ON REQUEST TO PARTICIPATE IN PATENT PROSECUTION HIGHWAY (PPH) AND PETITION TO MAKE SPECIAL UNDER 37 CFR 1.102(d)

This is a decision on the request to participate in the pilot Patent Prosecution Highway (PPH) program and the petition under 37 CFR 1.102(d), filed Jan. 27, 2009, to make the above-identified application special.

The request and petition are **DISMISSED**.

A grantable request to participate in the PPH program and petition to make special require:

(1) The U.S. application must validly claim priority under 35 U.S.C. 119(a) to one or more corresponding application(s) filed in the KIPO or to a PCT application that does not contain any priority claim, or the U.S. application must be a national stage entry of a PCT application that does not contain any priority claim;
(2) Applicant must submit a copy of the allowable/patentable claim(s) from the KIPO application(s) along with an English translation thereof and a statement that the English translation is accurate;
(3) All the claims in the U.S. application must sufficiently correspond or be amended to sufficiently correspond to the allowable/patentable claim(s) in the KIPO application(s);
(4) Examination of the U.S. application has not begun;
(5) Applicant must submit a copy of all the office actions from each of the KIPO application(s) containing the allowable/patentable claim(s) along with an English translation thereof and a statement that the English translation is accurate;
(6) Applicant must submit an IDS listing the documents cited by the KIPO examiner in the KIPO office action along with copies of documents except U.S. patents or U.S. patent application publications; and
(7) The required petition fee under 37 CFR 1.17(h).

The request to participate in the PPH program and petition fail to include:

1. A copy of the allowable/patentable claim(s) from the KIPO application(s) along with an English translation thereof and a statement that the English translation is accurate; and
2. A copy of all the office actions from each of the KIPO application(s) containing the allowable/patentable claim(s) along with an English translation thereof and a statement that the English translation is accurate.

Applicant is given a time period of **ONE MONTH or THIRTY DAYS**, whichever is longer, from the mailing date of this decision to correct the deficiencies. **NO EXTENSION OF TIME UNDER 37 CFR 1.136 IS PERMITTED.** If the deficiencies are not corrected with the time period given, the application will await action in its regular turn.

Telephone inquiries concerning this decision should be directed to Henry C. Yuen at 571-272-4856.

The application is being forwarded to the examiner for action on the merits commensurate with this decision.

Petition is **dismissed**.

Henry C. Yuen, Special Programs Examiner
Technology Center 3700 – Mechanical Engineering,
Manufacturing and Products
571-272-4856

UNITED STATES PATENT AND TRADEMARK OFFICE

Commissioner for Patents
United States Patent and Trademark Office
P.O. Box 1450
Alexandria, VA 22313-1450
www.uspto.gov

PARK LAW FIRM
3255 WILSHIRE BLVD
SUITE 1110
LOS ANGELES CA 90010

3/4/09

In re Application of	:	
KIM, CHAN-SOO	:	DECISION ON REQUEST TO
Application No. 12/374,990	:	PARTICIPATE IN PATENT
Filed: Jan. 23, 2009	:	PROSECUTION HIGHWAY
Attorney Docket No. 960-226	:	PILOT PROGRAM AND PETITION
For: HAIR CLIP FOR BEAUTY SHOP	:	TO MAKE SPECIAL
	:	37 CFR 1.102(d)

This is a decision on the request to participate in the Patent Prosecution Highway (PPH) pilot program and the renewed petition under 37 CFR 1.102(d), filed 3/2/09, to make the above-identified
application special.

The request and petition are GRANTED.

A grantable request to participate in the PPH pilot program and petition to make special require:

1. The U.S. application must validly claim priority under 35 U.S.C. 119(a) to one or more applications filed in the KIPO, note where the KIPO application with similar claims is not the same application from which the U.S. application claims priority that the applicant must identify the relationship between the K/PO application with similar claims and the KIPO priority application;

2. Applicant must submit a copy of:
a. The allowable/patentable claim(s) from the KIPO application(s) or if a copy of the allowable/patentable claims is available via the Dossier Access System (DAS) applicant may request the USPTO obtain a copy from the DAS, however if the USPTO is unable to obtain a copy from the DAS the applicant will be required to submit a copy;
b. An English translation of the allowable/patentable claim(s) and
c. A statement that the English translation is accurate;

3. Applicant must:
a. Ensure all the claims in the U.S. application must sufficiently correspond or be amended to sufficiently correspond to the allowable/patentable claim(s) in the KIPO application(s) and
b. Submit a claims correspondence table in English;

4. Examination of the U.S. application has not begun;
5. Applicant must submit:
a. Documentation of prior office action:
   i. a copy of the office action(s)just prior to the "Decision to Grant a Patent" from each of the KIPO application(s) containing the allowable/patentable claim(s) or
   ii. if the allowable/patentable claims(s) are from a "Notification of Reasons for Refusal" then the Notification of Reasons for Refusal or.
   iii. if the KIPO application is a first action allowance then no office action from the KIPO is necessary should be indicated on the request/petition form;

   Further, if a copy of the documents from a or b above is available via the Dossier Access System (DAS) applicant may request the USPTO obtain a copy from the DAS, however if the USPTO is unable to obtain a copy from the DAS the applicant will be required to submit a copy;
b. An English language translation of the KIPO Office action from (5)(a)(i)-(ii) above
c. A statement that the English translation is accurate;

6. Applicant must submit:
a. An IDS listing the documents cited by the KIPO examiner in the KIPO office action (unless already submitted in this application)
b. Copies of the documents except U.S. patents or U.S. patent application publications (unless already submitted in this application);

7. The required petition fee under 37 CFR 1.17(h).

CONCLUSION

The request to participate in the PPH pilot program and petition comply with the above requirements. Accordingly, the above-identified application has been accorded "special" status.

Telephone inquiries concerning this decision should be directed to Michael Day at 571-272-1568. All other inquiries concerning the examination or status of the application is accessible in the PAIR system at http://uspto.gov/ebc/index.html. The application is being forwarded to the examiner for action on the merits commensurate with this decision.

Henry C. Yuen, Special Programs Examiner
Technology Center 3700 – Mechanical Engineering, Manufacturing and Products
571-272-4856

UNITED STATES PATENT AND TRADEMARK OFFICE

COMMISSIONER FOR PATENTS
UNITED STATES PATENT AND TRADEMARK OFFICE
P.O. BOX 1450
ALEXANDRIA, VA 22313-1450
www.uspto.gov

1 1 MAR 2009

MANELLI DENISON & SELTER
2000 M STREET NW SUITE 700
WASHINGTON, DC 20036-3307

In re Application of BHARATRAJAN et al	:	
U.S. Application No.: 12/375,038	:	
PCT Application No.: PCT/EP2007/004980	:	
Int. Filing Date: 05 June 2007	:	
Priority Date Claimed: 07 June 2006	:	DECISION
Attorney Docket No.: 16518-50427	:	
For: STABLE AND BIOAVAILABLE	:	
FORMULATIONS AND A NOVEL FORM	:	
OF DESLORATADINE	:	

This is in response to applicant's "Petition for Revival of an International Application for Patent Designating the U.S. Abandoned Unintentionally Under 37 CFR 1.137(b)" filed 26 January 2009.

BACKGROUND

On 05 June 2007, applicant filed international application PCT/EP2007/004980, which claimed priority of an earlier India application filed 07 June 2006. A copy of the international application was communicated to the USPTO from the International Bureau on 13 December 2007. The thirty-month period for paying the basic national fee in the United States expired on 07 December 2008.

On 08 December 2008, international application PCT/EP2007/004980 became abandoned as to the United States for failure to timely pay the basic national fee.

On 26 January 2009, applicant filed the present petition under 37 CFR 1.137(b).

DISCUSSION

Under 37 CFR 1.137(b), a petition requesting that an application be revived on the grounds of unintentional abandonment must be accompanied by: (1) the required reply unless previously filed, (2) the petition fee as set forth in 37 CFR 1.17(m), (3) a statement that the entire

delay in filing the required reply from the due date for the reply until the filing of a grantable petition was unintentional, and (4) a terminal disclaimer if the application was filed before 08 June 1995.

With regard to item (1), applicant has provided the required reply under 35 U.S.C. 371.

With regard to item (2), applicant has provided the required petition fee.

With regard to item (3), applicant has provided the required statement.

With regard to item (4), because the international application was filed after 08 June 1995, no terminal disclaimer is required.

CONCLUSION

For the reasons above, the petition under 37 CFR 1.137(b) is GRANTED.

The application has an International Filing Date under 35 U.S.C. 363 of 05 June 2007, and a date under 35 U.S.C. 371(c)(1), (c)(2), and (c)(4) of 26 January 2009.

This application is being forwarded to the United States Designated/Elected Office (DO/EO/US) for further processing in accordance with this decision.

Bryan Lin

Bryan Lin
PCT Legal Examiner
PCT Legal Office

Telephone: 571-272-3303
Facsimile: 571-273-0459

UNITED STATES PATENT AND TRADEMARK OFFICE

Commissioner for Patents
United States Patent and Trademark Office
P.O. Box 1450
Alexandria, VA 22313-1450
www.uspto.gov

MAR 3 0 2009

LUCAS & MERCANTI, LLP
475 PARK AVENUE SOUTH
15TH FLOOR
NEW YORK NY 10016

In re Application of Kim, Kyu Wann et. al. Application No. 12/375,094 Filed: January 26, 2009 Attorney Docket No: 528.1001	: : : : : : :	DECISION ON REQUEST TO PARTICIPATE IN PATENT PROSECUTION HIGHWAY PILOT PROGRAM AND PETITION TO MAKE SPECIAL UNDER 37 CFR 1.102(d)

This is a decision on the request to participate in the Patent Prosecution Highway (PPH) pilot program and the petition under 37 CFR 1.102(d), filed January 26, 2009, to make the above-identified application special.

The request and petition are **GRANTED**.

A grantable request to participate in the PPH pilot program and petition to make special require:

(1) The U.S. application must validly claim priority under 35 U.S.C. 119(a) to one or more applications filed in the KIPO;
(2) All the claims in the U.S. application must sufficiently correspond or be amended to sufficiently correspond to the allowable/patentable claim(s) in the KIPO application(s);
(3) Applicant must submit a copy of the allowable/patentable claim(s) from the KIPO application(s) along with an English translation thereof and a statement that the English translation is accurate;
(4) Examination of the U.S. application has not begun;
(5) Applicant must submit a copy of all the office actions from each of the KIPO application(s) containing the allowable/patentable claim(s) along with an English translation thereof and a statement that the English translation is accurate;
(6) Applicant must submit an IDS listing the documents cited by the KIPO examiner in the KIPO office action along with copies of documents except U.S. patents or U.S. patent application publications; and
(7) The required petition fee under 37 CFR 1.17(h).

The request to participate in the PPH pilot program and petition comply with the above requirements. Accordingly, the above-identified application has been accorded "special" status.

Telephone inquiries concerning this decision should be directed to Ram R. Shukla at 571-272-0735.

All other inquiries concerning the examination or status of the application should be directed to Patent Application Information Retrieval (PAIR) system.

The application is being forwarded to the examiner for action on the merits commensurate with this decision.

Ram R. Shukla, Ph.D.
Supervisory Patent Examiner
TC 1600

RAM R. SHUKLA, PH.D.
SUPERVISORY PATENT EXAMINER

2 8 OCT 2009

UNITED STATES PATENT AND TRADEMARK OFFICE

COMMISSIONER FOR PATENTS
UNITED STATES PATENT AND TRADEMARK OFFICE
P.O. BOX 1450
ALEXANDRIA, VA 22313-1450
www.uspto.gov

EDWARDS ANGELL PALMER & DODGE LLP
P.O. BOX 55874
BOSTON, MA 02205

In re Application of NIELSEN et al	:	
U.S. Application No.: 12/375,098	:	
PCT Application No.: PCT/AU2007/001019	:	
Int. Filing Date: 23 July 2007	:	DECISION
Priority Date Claimed: 24 July 2006	:	
Attorney Docket No.: 83368(71795)	:	
For: METHOD OF PRODUCING A	:	
POPULATION OF CELLS	:	

This is in response to applicant's correspondence filed 26 January 2009, which is being treated as a petition under 37 CFR 1.497(d).

BACKGROUND

On 23 July 2007, applicant filed international application PCT/AU2007/001019, which claimed priority of an earlier United States application filed 24 July 2006. A copy of the international application was communicated to the USPTO from the International Bureau on 31 January 2008. The thirty-month period for paying the basic national fee in the United States expired on 26 January 2009.

On 26 January 2009, applicant filed national stage papers in the United States Designated/Elected Office (DO/EO/US). The submission was accompanied by, *inter alia*, the basic national fee required by 35 U.S.C. 371(c)(1), the present petition under 37 CFR 1.497(d), and an executed declaration.

DISCUSSION

The petition states that Nicholas Timmins should be added as an inventor.

37 CFR 1.497(d) states,

> If the oath or declaration filed pursuant to 35 U.S.C. 371(c)(4) and this section names an inventive entity different from the inventive entity set forth in

the international application, or if a change to the inventive entity has been effected under PCT Rule 92bis subsequent to the execution of any oath or declaration which was filed in the application under PCT Rule 4.17(iv) or this section and the inventive entity thus changed is different from the inventive entity identified in any such oath or declaration, applicant must submit:

(1) A statement from each person being added as an inventor and from each person being deleted as an inventor that any error in inventorship in the international application occurred without deceptive intention on his or her part;

(2) The processing fee set forth in § 1.17(i); and

(3) If an assignment has been executed by any of the original named inventors, the written consent of the assignee (see § 3.73(b) of this chapter); and

(4) Any new oath or declaration required by paragraph (f) of this section.

A review of international application PCT/AU2007/001019 reveals that Nicholas Timmins was added as an inventor in the international stage. See the Notification of the Recording of a Change (Form PCT/IB/306) mailed 30 January 2009.

CONCLUSION

For the reasons above, the petition under 37 CFR 1.497(d) is DISMISSED AS MOOT.

This application is being forwarded to the United States Designated/Elected Office (DO/EO/US) for further processing in accordance with this decision, including preparation and mailing of a Notification of Missing Requirements under 35 U.S.C. 371 (Form PCT/DO/EO/905) indicating that the declaration filed 26 January 2009 is an improper composite document. In particular, the declaration consists of one each of pages 1-3 and two of page 4. It is not acceptable to combine individual pages (e.g. signature pages) from different copies of a declaration into a single document for submission. Where different copies of a declaration are executed, each complete copy of the declaration (or an exact reproduction thereof) must be submitted.

Bryan Lin

Bryan Lin
PCT Legal Examiner
PCT Legal Office

Telephone: 571-272-3303
Facsimile: 571-273-0459

UNITED STATES PATENT AND TRADEMARK OFFICE

COMMISSIONER FOR PATENTS
UNITED STATES PATENT AND TRADEMARK OFFICE
P.O. BOX 1450
ALEXANDRIA, VA 22313-1450
www.uspto.gov

18 JUN 2009

FISH & RICHARDSON P.C.
P.O. BOX 1022
MINNEAPOLIS, MN 55440-1022

In re Application of ANOUAR et al	:	
U.S. Application No.: 12/375,158	:	
PCT Application No.: PCT/IB2006/002398	:	
Int. Filing Date: 28 July 2006	:	
Priority Date Claimed: none	:	DECISION
Attorney Docket No.: 07703-0420US1 WCR0150	:	
For: CLASSIFICATION USING SUPPORT VECTOR MACHINES AND VARIABLES SELECTION	:	

This is in response to applicant's petition under 37 CFR 1.497(d) filed 12 May 2009.

BACKGROUND

On 28 July 2006, applicant filed international application PCT/IB2006/002398. A copy of the international application was communicated to the USPTO from the International Bureau on 07 February 2008. The thirty-month period for paying the basic national fee in the United States expired on 28 January 2009.

On 26 January 2009, applicant filed national stage papers in the United States Designated/Elected Office (DO/EO/US). The submission was accompanied by, *inter alia*, the basic national fee required by 35 U.S.C. 371(c)(1).

On 12 May 2009, applicant filed the present petition under 37 CFR 1.497(d).

DISCUSSION

The petition states that Philippe Jard should be deleted as an inventor and that Gaston Baudat should be added as an inventor.

37 CFR 1.497(d) states,

> If the oath or declaration filed pursuant to 35 U.S.C. 371(c)(4) and this section names an inventive entity different from the inventive entity set forth in the international application, or if a change to the inventive entity has been effected under PCT Rule 92bis subsequent to the execution of any oath or declaration which was filed in the application under PCT Rule 4.17(iv) or this section and the inventive entity thus changed is different from the inventive entity identified in any such oath or declaration, applicant must submit:
>
> (1) A statement from each person being added as an inventor and from each person being deleted as an inventor that any error in inventorship in the international application occurred without deceptive intention on his or her part;
>
> (2) The processing fee set forth in § 1.17(i); and
>
> (3) If an assignment has been executed by any of the original named inventors, the written consent of the assignee (see § 3.73(b) of this chapter); and
>
> (4) Any new oath or declaration required by paragraph (f) of this section.

With regard to item (1) above, the requisite statements have been provided.

With regard to item (2) above, the requisite processing fee has been provided.

With regard to item (3) above, written consent of the assignee has been provided. The assignee has established the right to take action in compliance with 37 CFR 3.73(b).

With regard to item (4) above, a new declaration under 37 CFR 1.497(f) is not required.

CONCLUSION

For the reasons above, the petition under 37 CFR 1.497(d) is GRANTED.

The application has an International Filing Date under 35 U.S.C. 363 of 28 July 2006, and a date under 35 U.S.C. 371(c)(1), (c)(2), and (c)(4) of 12 May 2009.

This application is being forwarded to the United States Designated/Elected Office (DO/EO/US) for further processing in accordance with this decision.

Bryan Lin

Bryan Lin
PCT Legal Examiner
PCT Legal Office

Telephone: 571-272-3303
Facsimile: 571-273-0459

27 MAR 2009

UNITED STATES PATENT AND TRADEMARK OFFICE

Commissioner for Patents
United States Patent and Trademark Office
P.O. Box 1450
Alexandria, VA 22313-1450
www.uspto.gov

44654
SPRINKLE IP LAW GROUP
1301 W. 25th Street
Suite 408
Austin, TX 78705

In re Application of	:	
BACCELLI *et al*	:	
U.S. Application No.: 12/375,265	:	
PCT No.: PCT/FR2006/050898	:	**DECISION ON**
Int. Filing Date: 26 July 2007	:	**PETITION UNDER**
Priority Date: 27 July 2006	:	**37 CFR 1.137(b)**
Docket No.: ZIMM2450	:	
For: A VERTEBRAL FIXING SYSTEM	:	

Applicants' petition to revive under 37 CFR 1.137(b) filed with the national stage papers on 27 January 2009 is hereby **GRANTED** as follows:

The proper fees and the petition fee have been paid. Applicants make the required statement pursuant to 37 CFR 1.137(b)(3). A terminal disclaimer is not required. Accordingly, all requirements under 37 CFR 1.137(b) have been satisfied.

A declaration in compliance with 37 CFR 1.497(a) and (b) was filed 09 March 2009.

This application is being forwarded to the United States Designated/Elected Office for further processing.

James Thomson

James Thomson
Attorney Advisor
Office of PCT Legal Administration

Tel.: (571) 272-3302

17 JUL 2009

United States Patent and Trademark Office

Commissioner for Patents
United States Patent and Trademark Office
P.O. Box 1450
Alexandria, VA 22313-1450
www.uspto.gov

MORGAN, LEWIS & BOCKIUS LLP (SF)
One Market, Spear Street Tower, Suite 2800
San Francisco CA 94105

In re Application of	:	
Konwinski et al.	:	
Application No. 12/375,396	:	
PCT No.: PCT/US2007/075007	:	
Int. Filing Date: 01 August 2007	:	DECISION
Priority Date: 01 August 2006	:	
Att. Docket No.: 061818-5048-US	:	
For: Fermentation System Having	:	
Strainer Assembly	:	

The petition to revive under 37 CFR 1.137(b) filed on 15 May 2009 in the above-captioned application is hereby **GRANTED** as follows:

Petitioner states that "the entire delay in filing the required reply from the due date for the required reply until the filing of a grantable petition under 37 CFR 1.137(b) was unintentional." Said statement is accepted in satisfaction of 37 CFR 1.137(b)(3).

A review of the application file reveals that applicants have paid the petition fee. The required reply (in the form of the basic national fee) has been filed. No terminal disclaimer is required. Therefore, the request to revive the application abandoned under 35 U.S.C. 371(d) is granted as to the national stage in the United States of America.

This application is being forwarded to the Office of Patent Application Processing for further processing, including the preparation and mailing of a Notification of Missing Requirements (Form PCT/DO/EO/905) requiring an oath or declaration compliant with 37 CFR 1.497(a) and (b), and the surcharge under 37 CFR 1.492(h).

/George Dombroske/
George Dombroske
PCT Legal Examiner
Office of PCT Legal Administration
Tel: (571) 272-3283
Fax: (571) 273-0459

UNITED STATES PATENT AND TRADEMARK OFFICE

Commissioner for Patents
United States Patent and Trademark Office
P.O. Box 1450
Alexandria, VA 22313-1450
www.uspto.gov

DICKINSON WRIGHT, PLLC
1875 EYE STREET, NW
SUITE 1200
WASHINGTON, DC 20006

MAILED

JUL 01 2010

OFFICE OF PETITIONS

In re Application of	:	
Michael Rasztovits-Wiech	:	DECISION ON PETITION
Application No. 12/375,512	:	TO WITHDRAW
Filed: February 19, 2009	:	FROM RECORD
Attorney Docket No. 2006P13889 (NSN)	:	

This is a decision on the Request to Withdraw as attorney or agent of record under 37 C.F.R. § 1.36(b), filed May 31, 2010.

The request is **NOT APPROVED** because it is moot.

A review of the file record indicates that on June 4, 2010 the power of attorney to Dickinson Wright, PLLC was revoked by the assignee of the patent application. Accordingly, the request to withdraw under 37 C.F.R. § 1.36(b) is moot.

All future communications from the Office will be directed to the below-listed address until otherwise notified by applicant.

Telephone inquires concerning this decision should be directed to the undersigned at 571-272- 7751. All other inquires concerning either the examination or status of the application should be directed to the Technology Center.

Joan Olszewski

Joan Olszewski
Petitions Examiner
Office of Petitions

cc: LERNER GREENBERG STEMER LLP
P O BOX 2480
HOLLYWOOD FL 33022-2480

03 FEB 2009

UNITED STATES PATENT AND TRADEMARK OFFICE

COMMISSIONER FOR PATENTS
UNITED STATES PATENT AND TRADEMARK OFFICE
P.O. BOX 1450
ALEXANDRIA, VA 22313-1450
www.uspto.gov

Patrick A. Hilsmier
Global IP Counselors, LLP
1233 Twentieth Street, NW, Suite 700
Washington, DC 20036-2680

In re Application of	:	
Matsuoka et al	:	DECISION ON REQUEST TO
Application No. 12/375,578	:	PARTICIPATE IN NEW ROUTE
Filed: January 29, 2009	:	PILOT PROJECT
Int'l filing date: August 8, 2007	:	AND
Attorney Docket No.: DK-US060684	:	PETITION TO MAKE SPECIAL
	:	UNDER 37 CFR 1.102(d)

This is a decision on the request to participate in the New Route pilot project and the petition under 37 CFR 1.102(d), filed January 29, 2009, to make the above-identified application special.

The request and petition are **GRANTED**.

A grantable request to participate in the New Route pilot project and petition to make special require:

(1) The U.S. application to be a national stage entry of a PCT application filed with the JPO as the PCT receiving Office;
(2) The PCT application must either contain a priority claim to a single priority application filed in the JPO or contain no priority claim;
(3) Where the PCT application contains a priority claim to a single priority application filed in the JPO, a first action on the merits (search and examination results) for the priority application must be available no later than 26 months from the priority date;
(4) Applicant must separately submit the following items at the same time as entry into the national stage of the PCT application in the USPTO:

(a) A request to participate in the New Route pilot project and a petition to make the U.S. national stage application special along with the required petition fee;
(b) Applicant must submit a copy of the claim(s) searched and examined by the JPO along with an English translation thereof;
(c) Applicant must submit a copy of the first office action by the JPO along with an English translation thereof;
(d) A statement that the translations are accurate; and
(e) Applicant must submit an IDS listing the documents cited by the JPO examiner in the JPO office action (if appropriate) together with copies of all the documents except U.S. patents or U.S. patent application publications.

The request to participate in the New Route pilot project and petition comply with the above requirements. Accordingly, the above-identified application has been accorded "special" status.

Telephone inquiries concerning this decision should be directed to Magdalen Greenlief at 571-272-8140.

All other inquiries concerning the examination or status of the application should be directed to Technology Center 3700.

Once national stage processing of the above-identified application is complete, the application will be forwarded to the examiner for action on the merits commensurate with this decision.

Magdalen Greenlief
Senior Legal Advisor
Office of the Deputy Commissioner for
Patent Examination Policy

UNITED STATES PATENT AND TRADEMARK OFFICE

UNITED STATES DEPARTMENT OF COMMERCE
United States Patent and Trademark Office
Address: COMMISSIONER FOR PATENTS
P.O. Box 1450
Alexandria, Virginia 22313-1450
www.uspto.gov

APPLICATION NO.	FILING DATE	FIRST NAMED INVENTOR	ATTORNEY DOCKET NO.	CONFIRMATION NO.
12/375,585	03/13/2009	Lars Otto Uttenthal	HOI0018US.NP	8961

26259 7590 04/02/2010
LICATA & TYRRELL P.C.
66 E. MAIN STREET
MARLTON, NJ 08053

EXAMINER
GRUN, JAMES LESLIE

ART UNIT	PAPER NUMBER
1641	

NOTIFICATION DATE	DELIVERY MODE
04/02/2010	ELECTRONIC

Please find below and/or attached an Office communication concerning this application or proceeding.

The time period for reply, if any, is set in the attached communication.

Notice of the Office communication was sent electronically on above-indicated "Notification Date" to the following e-mail address(es):

poreilly@licataandtyrrell.com

UNITED STATES PATENT AND TRADEMARK OFFICE

Commissioner for Patents
United States Patent and Trademark Office
P.O. Box 1450
Alexandria, VA 22313-1450
www.uspto.gov

LICATA & TYRRELL P.C.
66 E. MAIN STREET
MARLTON NJ 08053

Applicant: Uttenthal et al.
Appl. No.: 12/375,585
Filing Date: March 13, 2009
Title: DIAGNOSTIC TEST TO EXCLUDE SIGNIFICANT RENAL INJURY
Attorney Docket No.: HOI0018US.NP
Pub. No.: US 2009/0311801 A1
Pub. Date: December 17, 2009

This is a decision on the request for republication of patent application publication under 37 CFR 1.221(a), filed on March 24, 2010, for the above-identified application.

The request under 37 CFR 1.221(a) is DISMISSED.

37 CFR 1.221(a) requires "a copy of the application in compliance with the Office electronic filing system requirements and be accompanied by the publication fee set forth in § 1.18(d) and the processing fee set forth in § 1.17(i)". If the request for republication does not comply with the electronic filing system requirements, the republication will not take place and the publication fee set forth in § 1.18(d) will be refunded. The processing fee will be retained.

The applicant did not supply a copy of the application in compliance with the Office electronic filing system, as required by 37 CFR 1.221(a) because **the Applicant submitted the papers as a "Document for an existing application", which are entered into the application file, and not as a "Pre-Grant Publication" submission**. In addition, the applicant did not provide a copy of the application for publication purposes. The request for republication does not comply with the electronic filing system requirements, thus republication will not take place.

Any request for republication under 37 CFR 1.221(a), must be submitted via the EFS system, as a Pre-Grant publication submission and must include a copy of the application in compliance with the Office electronic filing system requirements. The applicant is directed to the following website for additional instructions on how to submit a Pre-Grant Publication submission via the electronic filing system:

http://www.uspto.gov/ebc/portal/efs/pgpub_quickstart.pdf

Any questions or requests for reconsideration of the decision should be addressed as follows:

By mail to: Mail Stop PGPUB
Commissioner for Patents
P.O. Box 1450
Alexandria, Va. 22313-1450

By facsimile: 571-273-8300

Telephone inquiries regarding this correspondence should be directed to The Office of Data Management at 571-272-4200.

Tammy J. Koontz
Office of Data Management
United States Patent & Trademark Office

```
Adjustment date: 04/02/2010  KKING1
03/24/2010 INTEFSW  00020014 12375585
02 FC:1504                    -300.00 OP
```

```
Refund Ref:
04/02/2010          0030081931
-----------------------------------------

Credit Card Refund Total:      $300.00

Master C: XXXXXXXXXXXX1123
```

UNITED STATES PATENT AND TRADEMARK OFFICE

Commissioner for Patents
United States Patent and Trademark Office
P.O. Box 1450
Alexandria, VA 22313-1450
www.uspto.gov

LAW OFFICES OF RAYMOND A. NUZZO, LLC
579 THOMPSON AVENUE
EAST HAVEN CT 06512

COPY MAILED

DEC 2 2 2009

OFFICE OF PETITIONS

In re Application of	:	
TSE, Sze-Man	:	
Application No. 12/375,600	:	DECISION ON PETITION
Filed: February 16, 2009	:	TO WITHDRAW
Attorney Docket No. **SUN-10799**	:	FROM RECORD
	:	

This is a decision on the Request to Withdraw as attorney or agent of record under 37 C.F.R. § 1.36(b), filed October 25, 2009.

The request is **NOT APPROVED**.

A grantable request to withdraw as attorney/agent of record must be signed by every attorney/agent seeking to withdraw or contain a clear indication that one attorney is signing on behalf of another/others. The Office requires the practitioner(s) requesting withdrawal to certify that he, she, or they have: (1) given reasonable notice to the client, prior to the expiration of the response period, that the practitioner(s) intends to withdraw from employment; (2) delivered to the client or a duly authorized representative of the client all papers and property (including funds) to which the client is entitled; and (3) notified the client of any responses that may be due and the time frame within which the client must respond, pursuant 37 CFR 10.40(c).

In order to request or take action in a patent matter, the assignee must establish its ownership of the patent to the satisfaction of the Director. In this regard, a Statement under 37 CFR 3.73(b) must have either: (i) documentary evidence of a chain of title from the original owner to the assignee (*e.g.*, copy of an executed assignment), and a statement affirming that the documentary evidence of the chain of title from the original owner to the assignee was or concurrently is being submitted for recordation pursuant to § 3.11; or (ii) a statement specifying where documentary evidence of a chain of title from the original owner to the assignee is recorded in the assignment records of the Office (*e.g.*, reel and frame number).

All future communications from the Office will continue to be directed to the above-listed address until otherwise notified by applicant.

Telephone inquiries concerning this decision should be directed to the undersigned at 571-272-4231.

Michelle R. Eason
Paralegal Specialist
Office of Petitions

cc: **SUN CUPID INDUSTRIES, LTD.**
SUITES 1201-06, 12/F., TOWER 6
CHINA HONG KONG CITY, 33 CANTON ROAD
TSIM SHA TSUI, KOWLOON
HONG KONG

UNITED STATES PATENT AND TRADEMARK OFFICE

Commissioner for Patents
United States Patent and Trademark Office
P.O. Box 1450
Alexandria, VA 22313-1450
www.uspto.gov

LAW OFFICES OF RAYMOND A. NUZZO, LLC
579 THOMPSON AVENUE
EAST HAVEN CT 06512

COPY MAILED
JAN 20 2010

In re Application of	:	
TSE, Sze-Man	:	
Application No. 12/375,600	:	DECISION ON PETITION
Filed: February 16, 2009	:	TO WITHDRAW
Attorney Docket No. **SUN-10799**	:	FROM RECORD
	:	

This is a decision on the renewed Request to Withdraw as attorney or agent of record under 37 C.F.R. § 1.36(b), filed January 02, 2010.

The request is **APPROVED**.

A grantable request to withdraw as attorney/agent of record must be signed by every attorney/agent seeking to withdraw or contain a clear indication that one attorney is signing on behalf of another/others. The Office requires the practitioner(s) requesting withdrawal to certify that he, she, or they have: (1) given reasonable notice to the client, prior to the expiration of the response period, that the practitioner(s) intends to withdraw from employment; (2) delivered to the client or a duly authorized representative of the client all papers and property (including funds) to which the client is entitled; and (3) notified the client of any responses that may be due and the time frame within which the client must respond, pursuant 37 CFR 10.40(c).

The request was signed by Raymond A. Nuzzo on behalf of all attorneys of record who are associated with customer No. 25306. All attorneys/agents associated have been withdrawn. Applicant is reminded that there is no attorney of record at this time.

The correspondence address of record has been changed and the new correspondence address is the address indicated below.

There are no outstanding Office actions at this time.

Telephone inquiries concerning this decision should be directed to Michelle R. Eason at 571-272-4231.

Michelle R. Eason
Paralegal Specialist
Office of Petitions

cc: **SUN CUPID INDUSTRIE, LTD.**
33 CANTON ROAD, TOWER 6, 12TH FLOOR
SUITES 1201-03, CHINA HONG KONG CITY
TSIM SHA TSUI, KOWLOON
HONG KONG

UNITED STATES PATENT AND TRADEMARK OFFICE

UNITED STATES DEPARTMENT OF COMMERCE
United States Patent and Trademark Office
Address: COMMISSIONER FOR PATENTS
P.O. Box 1450
Alexandria, Virginia 22313-1450
www.uspto.gov

APPLICATION NO.	FILING DATE	FIRST NAMED INVENTOR	ATTORNEY DOCKET NO.	CONFIRMATION NO.
12/375,620	01/29/2009	Tamotsu Uchida	OHNO-44859	9448

52054 7590 02/18/2010
PEARNE & GORDON LLP
1801 EAST 9TH STREET
SUITE 1200
CLEVELAND, OH 44114-3108

EXAMINER
KOVAL, MELISSA J

ART UNIT	PAPER NUMBER
2862	

NOTIFICATION DATE	DELIVERY MODE
02/18/2010	ELECTRONIC

Please find below and/or attached an Office communication concerning this application or proceeding.

The time period for reply, if any, is set in the attached communication.

Notice of the Office communication was sent electronically on above-indicated "Notification Date" to the following e-mail address(es):

patdocket@pearne.com
dchervenak@pearne.com

UNITED STATES PATENT AND TRADEMARK OFFICE

Commissioner for Patents
United States Patent and Trademark Office
P.O. Box 1450
Alexandria, VA 22313-1450
www.uspto.gov

PEARNE & GORDON LLP
1801 EAST 9TH STREET
SUITE 1200
CLEVELAND OH 44114-3108

In re Application of	**: DECISION ON REQUEST TO**
UCHIDA et al.	**: PARTICIPATE IN THE PATENT**
Application No.: 12/375,620	**: PROSECUTION HIGHWAY**
Filed: 29 January 2009	**: PROGRAM AND PETITION**
Attorney Docket No.: OHNO-44859	**: TO MAKE SPECIAL UNDER**
For: MONITORING CAMERA DEVICE	**: 37 CFR 1.102(d)**

This is a decision on the request to participate in the Patent Prosecution Highway (PPH) program and the petition under 37 CFR 1.102(d), filed 05 January 2010, to make the above-identified application special.

The request and petition are **GRANTED**.

Discussion

A grantable request to participate in the PPH pilot program and petition to make special require:

1. The U.S. application is

    a. a Paris Convention application which either
        i. validly claims priority under 35 U.S.C. 119(a) and 37 CFR 1.55 to one or more applications filed in the JPO, or
        ii. validly claims priority to a PCT application that contains no priority claims, or
    b. a national stage application under the PCT (an application which entered the national stage in the U.S. from a PCT international application after compliance with 35 U.S.C. 371), which PCT application
        i. validly claims priority to an application filed in the JPO, or
        ii. validly claims priority to a PCT application that contains no priority claims, or
        iii. contains no priority claim, or
    c. a so-called bypass application filed under 35 U.S.C. 111(a) which validly claims benefit under 35 U.S.C. 120 to a PCT application, which PCT application
        i. validly claims priority to an application filed in the JPO, or
        ii. validly claims priority to a PCT application that contains no priority claims, or
        iii. contains no priority claim;

2. Applicant must submit a copy of:
    a. The allowable/patentable claim(s) from the JPO application(s);
    b. An English translation of the allowable/patentable claim(s) and
    c. A statement that the English translation is accurate;
3. Applicant must:
    a. Ensure all the claims in the U.S. application must sufficiently correspond or be amended to sufficiently correspond to the allowable/patentable claim(s) in the JPO application(s) and
    b. Submit a claims correspondence table in English;
4. Examination of the U.S. application has <u>not</u> begun;
5. Applicant must submit:
    a. Documentation of prior office action:
        i. a copy of the office action(s) just prior to the "Decision to Grant a Patent" from each of the JPO application(s) containing the allowable/patentable claim(s) or
        ii. if the allowable/patentable claims(s) are from a "Notification of Reasons for Refusal" then the Notification of Reasons for Refusal or
        iii. if the JPO application is a first action allowance then no office action from the JPO is necessary should be indicated on the request/petition form;
    b. An English language translation of the JPO Office action from (5)(a)(i)-(ii) above
    c. A statement that the English translation is accurate;
6. Applicant must submit:
    a. An IDS listing the documents cited by the JPO examiner in the JPO office action (unless already submitted in this application)
    b. Copies of the documents except U.S. patents or U.S. patent application publications (unless already submitted in this application);
7. The required petition fee under 37 CFR 1.17(h).

The request to participate in the PPH pilot program and petition comply with the above requirements. Accordingly, the above-identified application has been accorded "special" status.

Inquiries concerning this decision should be directed to Lee W. Young at 571-272-4549.

All other inquiries concerning the examination or status of the application is accessible in the PAIR system at http://www.uspto.gov/ebc.index.html.

This application will be forwarded to the examiner for action on the merits commensurate with this decision Once a formalities review has been completed.

Lee W. Young
TQAS
Technology Center 2800

UNITED STATES PATENT AND TRADEMARK OFFICE

Commissioner for Patents
United States Patent and Trademark Office
P.O. Box 1450
Alexandria, VA 22313-1450
www.uspto.gov

CALERA CORPORATION
BOZICEVIC FIELD & FRANCIS, LLP
1900 UNIVERSITY AVENUE, SUITE 200
EAST PALO ALTO, CA 94303

COPY MAILED

APR 0 9 2009

OFFICE OF PETITIONS

In re Application of	:	
Allen J. **BARD**	:	
Application No. 12/375,632	:	DECISION ON PETITION
Filed: January 29, 2009	:	TO MAKE SPECIAL UNDER
Attorney Docket No. **CLRA-023**	:	37 CFR 1.102(c)(1)
	:	

This is a decision on the petition under 37 CFR 1.102(c)(1), filed March 27, 2009, to make the above-identified application special based on applicant's age as set forth in M.P.E.P. § 708.02, Section IV.

The petition is **GRANTED**.

A grantable petition to make an application special under 37 CFR 1.102(c)(1) and MPEP § 708.02, Section IV: Applicant's Age must be accompanied by evidence showing that at least one of the applicants is 65 years of age, or more, such as a birth certificate or a statement by applicant. No fee is required

The instant petition includes the certification of inventor Allen J Bard, attesting to his age. Accordingly, the above-identified application will be accorded "special" status.

Inquiries concerning either the examination or status of the application should be directed to the Office of Patent Application Processing at 571-272-4000.

Telephone inquiries concerning this decision should be directed to the undersigned at 571-272-7253.

The application is being forwarded to the office of Initial Patent Examination for processing. This application will be accorded "special" status when pre-examination processing is done.

/Monica A. Graves/
Petitions Examiner, Office of Petitions

UNITED STATES PATENT AND TRADEMARK OFFICE

Commissioner for Patents
United States Patent and Trademark Office
P.O. Box 1450
Alexandria, VA 22313-1450
www.uspto.gov

MAIL

NOV 06 2009

DIRECTOR'S OFFICE
TECHNOLOGY CENTER 2600

OSHA LIANG L.L.P.
TWO HOUSTON CENTER
909 FANNIN, SUITE 3500
HOUSTON TX 77010

In re Application of KAKIUCHI, TAKASHI Application No. 12/375,636 Filed: January 29, 2009 Attorney Docket No. 04730/008001	: : : : : : :	DECISION ON REQUEST TO PARTICIPATE IN PATENT PROSECUTION HIGHWAY PROGRAM AND PETITION TO MAKE SPECIAL UNDER 37 CFR 1.102(d)

This is a decision on the request to participate in the Patent Prosecution Highway (PPH) program and the petition under 37 CFR 1.102(d), filed September 02, 2009 to make the above-identified application special.

The request and petition are **GRANTED**.

A grantable request to participate in the PPH program and petition to make special require:

(1) The U.S. application must validly claim priority under 35 U.S.C. 119(a) to one or more applications filed in the JPO;
(2) Applicant must submit a copy of the allowable/patentable claim(s) from the JPO application(s) along with an English translation thereof and a statement that the English translation is accurate;
(3) All the claims in the U.S. application must sufficiently correspond or be amended to sufficiently correspond to the allowable/patentable claim(s) in the JPO application(s);
(4) Examination of the U.S. application has not begun;
(5) Applicant must submit a copy of all the office actions from each of the JPO application(s) containing the allowable/patentable claim(s) along with an English translation thereof and a statement that the English translation is accurate;
(6) Applicant must submit an IDS listing the documents cited by the JPO examiner in the JPO office action along with copies of documents except U.S. patents or U.S. patent application publications; and
(7) The required petition fee under 37 CFR 1.17(h).

The request to participate in the PPH program and petition comply with the above requirements. Accordingly, the above-identified application has been accorded "special" status.

Telephone inquiries concerning this decision should be directed to Michael Horabik at 571-272-3068.

All other inquiries concerning the examination or status of the application should be directed to Patent Application Information Retrieval (PAIR) system.

The application is being forwarded to the examiner for action on the merits commensurate with this decision.

Michael Horabik
Quality Assurance Specialist
Technology Center 2600
Communications

UNITED STATES PATENT AND TRADEMARK OFFICE

Commissioner for Patents
United States Patent and Trademark Office
P.O. Box 1450
Alexandria, VA 22313-1450
www.uspto.gov

MAIL

NOV 06 2009

DIRECTOR'S OFFICE
TECHNOLOGY CENTER 2600

OSHA LIANG L.L.P.
TWO HOUSTON CENTER
909 FANNIN, SUITE 3500
HOUSTON TX 77010

In re Application of	:	
KAKIUCHI, TAKASHI	:	DECISION ON REQUEST TO
Application No. 12/375,645	:	PARTICIPATE IN PATENT
Filed: January 29, 2009	:	PROSECUTION HIGHWAY
Attorney Docket No. 04730/009001	:	PROGRAM AND PETITION
	:	TO MAKE SPECIAL UNDER
	:	37 CFR 1.102(d)

This is a decision on the request to participate in the Patent Prosecution Highway (PPH) program and the petition under 37 CFR 1.102(d), filed September 02, 2009 to make the above-identified application special.

The request and petition are **GRANTED**.

A grantable request to participate in the PPH program and petition to make special require:

(1) The U.S. application must validly claim priority under 35 U.S.C. 119(a) to one or more applications filed in the JPO;
(2) Applicant must submit a copy of the allowable/patentable claim(s) from the JPO application(s) along with an English translation thereof and a statement that the English translation is accurate;
(3) All the claims in the U.S. application must sufficiently correspond or be amended to sufficiently correspond to the allowable/patentable claim(s) in the JPO application(s);
(4) Examination of the U.S. application has not begun;
(5) Applicant must submit a copy of all the office actions from each of the JPO application(s) containing the allowable/patentable claim(s) along with an English translation thereof and a statement that the English translation is accurate;
(6) Applicant must submit an IDS listing the documents cited by the JPO examiner in the JPO office action along with copies of documents except U.S. patents or U.S. patent application publications; and
(7) The required petition fee under 37 CFR 1.17(h).

The request to participate in the PPH program and petition comply with the above requirements. Accordingly, the above-identified application has been accorded "special" status.

Telephone inquiries concerning this decision should be directed to Michael Horabik at 571-272-3068.

All other inquiries concerning the examination or status of the application should be directed to Patent Application Information Retrieval (PAIR) system.

The application is being forwarded to the examiner for action on the merits commensurate with this decision.

Michael Horabik
Quality Assurance Specialist
Technology Center 2600
Communications

UNITED STATES PATENT AND TRADEMARK OFFICE

Commissioner for Patents
United States Patent and Trademark Office
P.O. Box 1450
Alexandria, VA 22313-1450
www.uspto.gov

CST

May 28, 2009

In re application of Satoshi Abe et al Serial No. 12/375,675 Filed: January 29, 2009 For: LAMINATION SHAPING APPARATUS	: : : : : :	DECISION ON REQUEST TO PARTICIPATE IN PATENT PROSECUTION HIGHWAY PROGRAM AND PETITION TO MAKE SPECIAL UNDER 37 CFR 1.102(d)

This is a decision on the request to participate in the Patent Prosecution Highway (PPH) program and the petition under 37 CFR 1.102(d) to make the above-identified application special filed March 10, 2009.

The request and petition are **DISMISSED**.

A grantable request to participate in the PPH program and petition to make special require:

(1) The U.S. application must validly claim priority under 35 U.S.C. 119(a) to one or more applications filed in the JPO, note where the JPO application with similar claims is not the same application from which the U.S. application claims priority that the applicant must identify the relationship between the JPO application with similar claims and the JPO priority application;

(2) Applicant must submit a copy of:
   a. The allowable/patentable claim(s) from the JPO application(s) or if a copy of the allowable/patentable claims is available via the Dossier Access System (DAS) applicant may request the USPTO to obtain a copy from DAS; however, if the USPTO is unable to obtain a copy from the DAS, the applicant will be required to submit a copy;
   b. An English translation of the allowable/ patentable claim(s), if applicable; and
   c. A statement that the English translation is accurate, if applicable;

(3) Applicant must:
   a. Ensure all the claims in the U.S. application must sufficiently correspond or be amended to sufficiently correspond to the allowable/patentable claim(s) in the JPO application(s); and
   b. Submit a claims correspondence table in English;

(4) Examination of the U.S. application has not begun;

(5) Applicant must submit:
a. Documentation of prior office action:
i. a copy of the office action(s) just prior to the "Decision to Grant a Patent" from each of the JPO application(s) containing the allowable/patentable claims(s) or
ii. if the allowable/patentable claim(s) are from "Notification of Reasons for Refusal" then the Notification of Reasons for Refusal or
iii. if the JPO application is a first action allowance then no office action from the JPO is necessary should be indicated on the request/petition form:
Further, if a copy of the documents from (i) or (ii) is available via the Dossier Access System (DAS), applicant may request the USPO obtain a copy from the DAS; however, if the USPTO is unable to obtain a copy of the DAS, the applicant will be required to submit a copy;
b. An English language translation of the JPO Office action from (5)(a)(i)-(ii) above if applicable; and
c. A statement that the English translation is accurate;

(6) Applicant must submit:
a. An IDS listing the documents cited by the JPO examiner in the JPO office action (unless already submitted in this application)
b. Copies of documents except U.S. patents or U.S. patent application publications (unless already submitted in this application); and

(7) The required petition fee under 37 CFR 1.17(h).

The request to participate in the PPH program and petition fail because:

(3) All of the claims in the U.S. application must sufficiently correspond or be amended to sufficiently correspond to the allowable/patentable claim(s) in the JPO application(s).

Claim 1 of the JPO application requires "forming" of said cured layer, whereas claim 1 of the present application requires "curing" of said cured layer. See line 6 of claim 1 of the JPO application and line 6 of claim 1 of the present application.

Applicant is given a time period of **ONE MONTH OR THIRTY DAYS**, whichever is longer, from the mailing date of this decision to correct the deficiencies. **NO EXTENSION OF TIME UNDER 37 CFR 1.136 IS PERMITTED.** If the deficiencies are not corrected within the time period given, the application with await action in its regular turn.

Any inquiry regarding this decision should be directed to Christine Tierney, Quality Assurance Specialist, at (571) 272-1055.

All other inquiries concerning the examination or status of the application is accessible in the PAIR system at http://www.uspto.gov/ebc/index.html.

/Christine Tierney/

Christine Tierney
Quality Assurance Specialist
Technology Center 1700

UNITED STATES PATENT AND TRADEMARK OFFICE

Commissioner for Patents
United States Patent and Trademark Office
P.O. Box 1450
Alexandria, VA 22313-1450
www.uspto.gov

CST

July 1, 2009

In re application of	:	DECISION ON REQUEST TO
Satoshi Abe et al	:	PARTICIPATE IN PATENT
Serial No. 12/375,675	:	PROSECUTION HIGHWAY
Filed: January 29, 2009	:	PROGRAM AND
For: LAMINATION SHAPING	:	PETITION TO MAKE SPECIAL
APPARATUS	:	UNDER 37 CFR 1.102(d)

This is a decision on the supplemental request to participate in the Patent Prosecution Highway (PPH) program filed June 28, 2009.

The request and petition are **GRANTED**.

A grantable request to participate in the PPH program and petition to make special require:

(1) The U.S. application must validly claim priority under 35 U.S.C. 119(a) to one or more applications filed in the JPO, note where the JPO application with similar claims is not the same application from which the U.S. application claims priority that the applicant must identify the relationship between the JPO application with similar claims and the JPO priority application;

(2) Applicant must submit a copy of:
   a. The allowable/patentable claim(s) from the JPO application(s) or if a copy of the allowable/patentable claims is available via the Dossier Access System (DAS) applicant may request the USPTO to obtain a copy from DAS; however, if the USPTO is unable to obtain a copy from the DAS, the applicant will be required to submit a copy;
   b. An English translation of the allowable/ patentable claim(s), if applicable; and
   c. A statement that the English translation is accurate, if applicable;

(3) Applicant must:
   a. Ensure all the claims in the U.S. application must sufficiently correspond or be amended to sufficiently correspond to the allowable/patentable claim(s) in the JPO application(s); and
   b. Submit a claims correspondence table in English;

(4) Examination of the U.S. application has not begun;

(5) Applicant must submit:

a. Documentation of prior office action:
   i. a copy of the office action(s) just prior to the "Decision to Grant a Patent" from each of the JPO application(s) containing the allowable/patentable claims(s) or
   ii. if the allowable/patentable claim(s) are from "Notification of Reasons for Refusal" then the Notification of Reasons for Refusal or
   iii. if the JPO application is a first action allowance then no office action from the JPO is necessary should be indicated on the request/petition form:
   Further, if a copy of the documents from a or b is available via the Dossier Access System (DAS), applicant may request the USPO obtain a copy from the DAS; however, if the USPTO is unable to obtain a copy of the DAS, the applicant will be required to submit a copy;
b. An English language translation of the JPO Office action from (5)(a)(i)-(ii) above if applicable; and
c. A statement that the English translation is accurate;

(6) Applicant must submit:

a. An IDS listing the documents cited by the JPO examiner in the JPO office action (unless already submitted in this application)
b. Copies of documents except U.S. patents or U.S. patent application publications (unless already submitted in this application); and

(7) The required petition fee under 37 CFR 1.17(h).

The request to participate in the PPH program and petition comply with the above requirements. Accordingly, the above-identified application has been accorded "special" status.

The application is currently undergoing National Stage processing, and will be forwarded to the examiner for action on the merits upon completion of the processing.

Any inquiry regarding this decision should be directed to Christine Tierney, Quality Assurance Specialist, at (571) 272-1055.

All other inquiries concerning the examination or status of the application is accessible in the PAIR system at http://www.uspto.gov/ebc/index.html.

/Christine Tierney/

Christine Tierney
Quality Assurance Specialist
Technology Center 1700

UNITED STATES PATENT AND TRADEMARK OFFICE

UNITED STATES DEPARTMENT OF COMMERCE
United States Patent and Trademark Office
Address: COMMISSIONER FOR PATENTS
P.O. Box 1450
Alexandria, Virginia 22313-1450
www.uspto.gov

APPLICATION NO.	FILING DATE	FIRST NAMED INVENTOR	ATTORNEY DOCKET NO.	CONFIRMATION NO.
12/375,872		Atsushi YOSHIDA	2009-0151A	1566

52349 7590 08/27/2009
WENDEROTH, LIND & PONACK L.L.P.
1030 15th Street, N.W.
Suite 400 East
Washington, DC 20005-1503

EXAMINER

ART UNIT	PAPER NUMBER
2416	

MAIL DATE	DELIVERY MODE
08/27/2009	PAPER

Please find below and/or attached an Office communication concerning this application or proceeding.

The time period for reply, if any, is set in the attached communication.

UNITED STATES PATENT AND TRADEMARK OFFICE

Commissioner for Patents
United States Patent and Trademark Office
P.O. Box 1450
Alexandria, VA 22313-1450
www.uspto.gov

MAILED

AUG 27 2009

DIRECTOR OFFICE
TECHNOLOGY CENTER 2400

WENDEROTH, LIND & PONACK L.L.P.
1030 15th Street, N.W.
Suite 400 East
Washington DC 20005-1503

In re Application of: Atsushi **Yoshida** et al.
Application No. 12/375,872
Filed: January 30, 2009

For: **NETWORK CONTROL APPARATUS, METHOD, AND PROGRAM**

DECISION ON REQUEST TO PARTICIPATE IN PATENT PROSECUTION HIGHWAY PROGRAM AND PETITION TO MAKE SPECIAL UNDER 37 CFR 1.102(d)

This is a decision on the request to participate in the Patent Prosecution Highway (PPH) program and the petition under 37 CFR 1.102(d), filed June 2, 2009, to make the above-identified application special.

The petition is **GRANTED.**

A grantable request to participate in the PPH program and petition to make special require:

(1) The U.S. application must validly claim priority under 35 U.S.C. 119(a) to one or more applications filed in the JPO;

(2) Applicant must submit a copy of the allowable/patentable claim(s) from the JPO application(s) along with an English translation thereof and a statement that the English translation is accurate;

(3) All the claims in the U.S. application must sufficiently correspond or be amended to sufficiently correspond to the allowable/patentable claim(s) in the JPO application(s);

(4) Examination of the U.S. application has not begun;

(5) Applicant must submit a copy of the latest office actions (other than "Decision to Grant a Patent") from each of the JPO application(s) containing the allowable/patentable claim(s) along with an English translation thereof and a statement that the English translation is accurate;

(6) Applicant must submit an IDS listing the documents cited by the JPO examiner in the JPO office action along with copies of documents except U.S. patents or U.S. patent application publications; and

(7) The required petition fee under 37 CFR 1.17(h).

The request to participate in the PPH program and petition are found to comply with the above requirements. Accordingly, the above-identified application has been accorded "special" status.

Telephone inquiries concerning this decision should be directed to Ricky Ngo 571-272-3139.

All other inquiries concerning the examination or status of the application is accessible in the PAIR system at http://www.uspto.gov/ebc/index.html.

The application is being forwarded to the examiner for action on the merits commensurate with this decision.

/Ricky Ngo/

Ricky Ngo
Supervisory Patent Examiner, Technology Center 2400
571-272-3139

UNITED STATES PATENT AND TRADEMARK OFFICE

COMMISSIONER FOR PATENTS
UNITED STATES PATENT AND TRADEMARK OFFICE
P.O. BOX 1450
ALEXANDRIA, VA 22313-1450
www.uspto.gov

05 FEB 2010

POLSTER, LIEDER, WOODRUFF & LUCCHESI
12412 POWERSCOURT DRIVE SUITE 200
ST. LOUIS, MO 63131-3615

In re Application of BELLISTRI et al	:	
U.S. Application No.: 12/375,898	:	
PCT Application No.: PCT/US2007/074982	:	
Int. Filing Date: 01 August 2007	:	DECISION
Priority Date Claimed: 01 August 2006	:	
Attorney Docket No.: PCRC 9664W1	:	
For: SMALL ENGINE OPERATION	:	
COMPONENTS	:	

This is in response to applicant's petition under 37 CFR 1.47(a) filed 08 December 2009.

BACKGROUND

On 01 August 2007, applicant filed international application PCT/US2007/074982, which claimed priority of an earlier United States application filed 01 August 2006. The thirty-month period for paying the basic national fee in the United States expired on 02 February 2009.

On 30 January 2009, applicant filed national stage papers in the United States Designated/Elected Office (DO/EO/US). The submission was accompanied by, *inter alia*, the basic national fee required by 35 U.S.C. 371(c)(1).

On 08 October 2009, the DO/EO/US mailed a Notification of Missing Requirements Under 35 U.S.C. 371 (Form PCT/DO/EO/905), which indicated that an oath or declaration in compliance with 37 CFR 1.497 must be filed.

On 08 December 2009, applicant filed the present petition under 37 CFR 1.47(a).

On 17 December 2009, applicant filed a declaration executed by the previously nonsigning inventor.

DISCUSSION

In view of the declaration filed 17 December 2009, the petition filed 08 December 2009 will not be treated on the merits.

CONCLUSION

For the reasons above, the petition filed 08 December 2009 is DISMISSED AS MOOT.

The application has an International Filing Date under 35 U.S.C. 363 of 01 August 2007, and a date under 35 U.S.C. 371(c)(1), (c)(2), and (c)(4) of 17 December 2009.

This application is being forwarded to the United States Designated/Elected Office (DO/EO/US) for further processing in accordance with this decision.

Bryan Lin
Bryan Lin
PCT Legal Examiner
PCT Legal Office

Telephone: 571-272-3303
Facsimile: 571-273-0459

12 JUL 2010

UNITED STATES PATENT AND TRADEMARK OFFICE

COMMISSIONER FOR PATENTS
UNITED STATES PATENT AND TRADEMARK OFFICE
P.O. BOX 1450
ALEXANDRIA, VA 22313-1450
www.uspto.gov

POLSTER, LIEDER, WOODRUFF & LUCCHESI, L.C.
12412 POWERSCOURT DR. SUITE 200
ST. LOUIS, MO 63131-3615

In re Application of BELLISTRI et al	:	
U.S. Application No.: 12/375,898	:	
PCT Application No.: PCT/US2007/074982	:	
Int. Filing Date: 01 August 2007	:	DECISION
Priority Date Claimed: 01 August 2006	:	
Attorney Docket No.: PCRC 9664W1	:	
For: SMALL ENGINE OPERATION	:	
COMPONENTS	:	

This is in response to applicant's renewed request for refund filed 03 May 2010.

BACKGROUND

On 01 August 2007, applicant filed international application PCT/US2007/074982, which claimed priority of an earlier United States application filed 01 August 2006. A copy of the international application was communicated to the USPTO from the International Bureau on 07 February 2008. The thirty-month period for paying the basic national fee in the United States expired on 02 February 2009.

On 30 January 2009, applicant filed national stage papers in the United States Designated/Elected Office (DO/EO/US). The submission was accompanied by, *inter alia*, the basic national fee required by 35 U.S.C. 371(c)(1), authorization to charge any additional required fees, and a preliminary amendment.

On 11 March 2010, applicant filed a request for refund.

On 16 April 2010, the USPTO mailed a decision dismissing the 11 March 2010 request for refund.

On 03 May 2010, applicant filed the instant renewed request for refund.

DISCUSSION

Applicant requests a refund of excess claims fees on grounds that the preliminary amendment filed on 30 January 2009 reduced the number of claims.

MPEP 1893.01(c) states in relevant part,

> A preliminary amendment accompanying the initial national stage submission under 35 U.S.C. 371 that cancels claims and/or eliminates multiple dependent claims will be effective to reduce the number of claims to be considered in calculating extra claim fees required under 37 CFR 1.492(d)-(e) and/or eliminate the multiple dependent claim fee required under 37 CFR 1.492(f). A subsequently filed amendment canceling claims and/or eliminating multiple dependent claims will not entitle applicant to a refund of fees previously paid. See MPEP § 607 and § 608. (Emphasis added.)

In the present case, although applicant may have sought to reduce the number of claims for examination at the time of national stage entry, the initial national stage submission on 30 January 2009 did not include an amendment to the claims in compliance with 37 CFR 1.121(c). Thus, applicant's deposit account was properly charged for the presence of excess claims and multiple dependent claims. The petition states that the Office had a duty to notify applicant of the defective amendment and give applicant an opportunity to correct the deficiency. However, even assuming *arguendo* that applicant was entitled to an opportunity to file a corrected preliminary amendment, such subsequently filed corrected preliminary amendment would not accompany the initial national stage submission and thus would not entitle applicant to a refund of paid claims fees in accordance with MPEP 1893.01(c). Therefore, because a proper amendment to the claims did not accompany the initial national stage submission and because any subsequently filed amendment to the claims would not have entitled applicant to a refund of paid claims fees, a refund of excess claims fees is not indicated in the present case.

CONCLUSION

For the reasons above, the renewed request for refund is DISMISSED without prejudice.

If reconsideration on the merits of the request is desired, a proper response must be filed within TWO (2) MONTHS from the mail date of this decision. Extensions of time are available under 37 CFR 1.136(a).

Any further correspondence with respect to this matter may be filed electronically via EFS-Web selecting the document description "Petition for review and processing by the PCT Legal Office" or by mail addressed to Mail Stop PCT, Commissioner for Patents, Office of PCT Legal Administration, P.O. Box 1450, Alexandria, Virginia 22313-1450, with the contents of the letter marked to the attention of the Office of PCT Legal Administration.

Bryan Lin
Bryan Lin
PCT Legal Examiner
PCT Legal Office

Telephone: 571-272-3303
Facsimile: 571-273-0459

UNITED STATES PATENT AND TRADEMARK OFFICE

Commissioner for Patents
United States Patent and Trademark Office
P.O. Box 1450
Alexandria, VA 22313-1450
www.uspto.gov

STOEL RIVES LLP – PDX
900 SW FIFTH AVENUE
SUITE 2600
PORTLAND OR 97204-1268

COPY MAILED

MAR 3 1 2009

OFFICE OF PETITIONS

In re Application of	:	
Scheffer et al.	:	
Application No. 12/375,899	:	ON PETITION
Application Deposited: January 30, 2009	:	
Attorney Docket No. 36716/2:2	:	

This is a decision on the petition under 37 CFR 1.102(c)(1), filed January 30, 2009, to make the above-identified application special based on applicant's age as set forth in M.P.E.P. § 708.02, Section IV.

The petition is **GRANTED**.

A grantable petition to make an application special under 37 CFR 1.102(c)(1) and MPEP § 708.02, Section IV: Applicant's Age must be accompanied by evidence showing that at least one of the applicants is 65 years of age, or more, such as a birth certificate or a statement by applicant. No fee is required.

The instant petition includes a statement (PTO/SB/130 form) by the applicant's attorney that he is 65 years of age. Accordingly, the above-identified application has been accorded "special" status.

Telephone inquiries concerning this decision should be directed to the undersigned at 571-272-7751. All other inquiries concerning either the examination or status of the application should be directed to the Technology Center.

This application is being referred to the Office of Patent Application Processing for further processing in accordance with this decision on petition.

Joan Olszewski

Joan Olzsewski
Petitions Examiner
Office of Petitions

UNITED STATES PATENT AND TRADEMARK OFFICE

UNITED STATES DEPARTMENT OF COMMERCE
United States Patent and Trademark Office
Address: COMMISSIONER FOR PATENTS
P.O. Box 1450
Alexandria, Virginia 22313-1450
www.uspto.gov

APPLICATION NO.	FILING DATE	FIRST NAMED INVENTOR	ATTORNEY DOCKET NO.	CONFIRMATION NO.
12/375,932	01/30/2009	Kazuaki Takahata	03500.131970.	2515

5514 7590 05/27/2010
FITZPATRICK CELLA HARPER & SCINTO
1290 Avenue of the Americas
NEW YORK, NY 10104-3800

EXAMINER
RAEVIS, ROBERT R

ART UNIT	PAPER NUMBER
2856	

MAIL DATE	DELIVERY MODE
05/27/2010	PAPER

Please find below and/or attached an Office communication concerning this application or proceeding.

The time period for reply, if any, is set in the attached communication.

UNITED STATES PATENT AND TRADEMARK OFFICE

Commissioner for Patents
United States Patent and Trademark Office
P.O. Box 1450
Alexandria, VA 22313-1450
www.uspto.gov

FITZPATRICK CELLA HARPER & SCINTO
1290 Avenue of the Americas
NEW YORK NY 10104-3800

In re Application of	
TAKAHATA et al.	**: DECISION ON REQUEST TO**
Application No.: 12/375,932	**: PARTICIPATE IN THE PATENT**
Filed: 30 January 2009	**: PROSECUTION HIGHWAY**
Attorney Docket No.: 03500.131970.	**: PROGRAM AND PETITION**
For: METHOD FOR STORING	**: TO MAKE SPECIAL UNDER**
PIPETTE CHIP	**: 37 CFR 1.102(d)**

This is a decision on the request to participate in the Patent Prosecution Highway (PPH) program and the petition under 37 CFR 1.102(d), filed 10 May 2010, to make the above-identified application special.

The request and petition are **GRANTED**.

A grantable request to participate in the PPH program and petition to make special require:

1. The U.S. application must validly claim priority under 35 U.S.C. 119(a) to one or more applications filed in the JPO, note where the JPO application with similar claims is not the same application from which the U.S. application claims priority that the applicant must identify the relationship between the JPO application with similar claims and the JPO priority application;

2. Applicant must submit a copy of:
   a. The allowable/patentable claim(s) from the JPO application(s) or if a copy of the allowable/patentable claims is available via the Dossier Access System (DAS) applicant may request the USPTO obtain a copy from the DAS, however if the USPTO is unable to obtain a copy from the DAS the applicant will be required to submit a copy;
   b. An English translation of the allowable/patentable claim(s) and
   c. A statement that the English translation is accurate;

3. Applicant must
   a. Ensure all the claims in the U.S. application must sufficiently correspond or be amended to sufficiently correspond to the allowable/patentable claim(s) in the JPO application(s) and
   b. Submit a claims correspondence table in English;

4. Examination of the U.S. application has not begun;

5. Applicant must submit:
    a. Documentation of prior office action:
        i. a copy of the office action(s) just prior to the "Decision to Grant a Patent" from each of the JPO application(s) containing the allowable/patentable claim(s) or
        ii. if the allowable/patentable claims(s) are from a "Notification of Reasons for Refusal" then the Notification of Reasons for Refusal or
        iii. if the JPO application is a first action allowance then no office action from the JPO is necessary should be indicated on the request/petition form;

    Further, if a copy of the documents from a or b above is available via the Dossier Access System (DAS) applicant may request the USPTO obtain a copy from the DAS, however if the USPTO is unable to obtain a copy from the DAS the applicant will be required to submit a copy;
    b. An English language translation of the JPO Office action from (5)(a)(i)-(ii) above
    c. A statement that the English translation is accurate;

6. Applicant must submit:
    a. An IDS listing the documents cited by the JPO examiner in the JPO office action (unless already submitted in this application)
    b. Copies of the documents except U.S. patents or U.S. patent application publications (unless already submitted in this application);

7. The required petition fee under 37 CFR 1.17(h).

The request to participate in the PPH pilot program and petition comply with the above requirements. Accordingly, the above-identified application has been accorded "special" status.

Telephone inquiries concerning this decision should be directed to Lee W. Young at 571-272-4549.

All other inquiries concerning the examination or status of the application is accessible in the PAIR system at http://www.uspto.gov/ebc.index.html.

This application will be forwarded to the examiner for action on the merits commensurate with this decision once this application's formality reviews have been completed.

Lee W. Young
TQAS
Technology Center 2800 – Semiconductors
Electrical & Optical Systems & Components

UNITED STATES PATENT AND TRADEMARK OFFICE

UNITED STATES DEPARTMENT OF COMMERCE
United States Patent and Trademark Office
Address: COMMISSIONER FOR PATENTS
P.O. Box 1450
Alexandria, Virginia 22313-1450
www.uspto.gov

KENYON & KENYON LLP
1500 K STREET N.W.
SUITE 700
WASHINGTON, DC 20005

Mail Date: 04/21/2010

Applicant	: Kota Manabe	: DECISION ON REQUEST FOR
Patent Number	: 7633783	: RECALCULATION of PATENT
Issue Date	: 12/15/2009	: TERM ADJUSTMENT IN VIEW
Appliction No	: 12/376,009	: OF WYETH AND NOTICE OF INTENT TO
Filed	: 02/02/2009	: ISSUE CERTIFICATE OF CORRECTION
		:

The Request for Recalculation is **GRANTED** to the extent indicated.

The patent term adjustment has been determined to be **0** days. The USPTO will *sua sponte* issue a certificate of correction reflecting the amount of PTA days determined by the recalculation.

Prior to the issuance of the certificate of correction, the USPTO will afford patentee an opportunity to be heard and request reconsideration. Accordingly, patentee has **one month or thirty (30) days**, whichever is longer, to file a request for reconsideration of this patent term adjustment calculation. See 35 U.S.C. 154(b)(3)(B)(ii) and 37 CFR 1.322(a)(4). No extensions of time will be granted under 37 CFR 1.136.

Patentee should use document code PET.OP if electronically filing a request for reconsideration of this patent term adjustment calculation. The patentee must also include the information required by 37 CFR 1.705(b)(2) and the fee required by 37 CFR 1.18(e). If patentee does not file a timely request for reconsideration of this patent term adjustment calculation including the information required by 37 CFR 1.705(b)(2) and the fee required by 37 CFR 1.18(e), the USPTO will issue a certificate of correction reflecting the PTA determination noted above.

Patentee should be aware that in order to preserve the right to review in the United States District Court for the District of Columbia of the USPTO patent term adjustment determination, patentee must ensure that he or she also take the steps required under 35 U.S.C. 154(b)(4)(A) in a timely manner. Nothing in the request for recalculation should be construed as providing an alternative time frame for commencing a civil action under 35 U.S.C. 154(b)(4)(A).

Any questions concerning this decision should be directed to the Office of Patent Legal Administration at 571-272-7702.

06 FEB 2009

UNITED STATES PATENT AND TRADEMARK OFFICE

COMMISSIONER FOR PATENTS
UNITED STATES PATENT AND TRADEMARK OFFICE
P.O. BOX 1450
ALEXANDRIA, VA 22313-1450
www.uspto.gov

Patrick A. Hilsmier
Global IP Counselors, LLP
1233 Twentieth Street, NW, Suite 700
Washington, DC 20036-2680

In re Application of	:	
Kurihara et al	:	DECISION ON REQUEST TO
Application No. 12/376,172	:	PARTICIPATE IN NEW ROUTE
Filed: February 3, 2009	:	PILOT PROJECT
Int'l filing date: August 3, 2007	:	AND
Attorney Docket No.: DK-US060611	:	PETITION TO MAKE SPECIAL
	:	UNDER 37 CFR 1.102(d)

This is a decision on the request to participate in the New Route pilot project and the petition under 37 CFR 1.102(d), filed February 3, 2009, to make the above-identified application special.

The request and petition are **GRANTED**.

A grantable request to participate in the New Route pilot project and petition to make special require:

(1) The U.S. application to be a national stage entry of a PCT application filed with the JPO as the PCT receiving Office;
(2) The PCT application must either contain a priority claim to a single priority application filed in the JPO or contain no priority claim;
(3) Where the PCT application contains a priority claim to a single priority application filed in the JPO, a first action on the merits (search and examination results) for the priority application must be available no later than 26 months from the priority date;
(4) Applicant must separately submit the following items at the same time as entry into the national stage of the PCT application in the USPTO:

(a) A request to participate in the New Route pilot project and a petition to make the U.S. national stage application special along with the required petition fee;
(b) Applicant must submit a copy of the claim(s) searched and examined by the JPO along with an English translation thereof;
(c) Applicant must submit a copy of the first office action by the JPO along with an English translation thereof;
(d) A statement that the translations are accurate; and
(e) Applicant must submit an IDS listing the documents cited by the JPO examiner in the JPO office action (if appropriate) together with copies of all the documents except U.S. patents or U.S. patent application publications.

The request to participate in the New Route pilot project and petition comply with the above requirements. Accordingly, the above-identified application has been accorded "special" status.

Telephone inquiries concerning this decision should be directed to Magdalen Greenlief at 571-272-8140.

All other inquiries concerning the examination or status of the application should be directed to the Technology Center which the application is assigned.

Once national stage processing of the above-identified application is complete, the application will be forwarded to the examiner for action on the merits commensurate with this decision.

Magdalen Greenlief
Senior Legal Advisor
Office of the Deputy Commissioner for
Patent Examination Policy

UNITED STATES PATENT AND TRADEMARK OFFICE

0 4 JAN 2010

Commissioner for Patents
United States Patent and Trademark Office
P.O. Box 1450
Alexandria, VA 22313-1450
www.uspto.gov

KRATZ, QUINTOS & HANSON, LLP
1420 K Street, N.W.
Suite 400
WASHINGTON DC 20005

In re Application of:	:	
HOSOI, Kenichiro, et al.	:	DECISION
U.S. Application No.: 12/376,194	:	
PCT No.: PCT/JP2007/065297	:	
International Filing Date: 03 August 2007	:	
Priority Date: 03 August 2006	:	
Atty Docket No.: 090034	:	
For: IMAGE DISPLAY CONTROL	:	
DEVICE, IMAGE PROCESSING	:	
DEVICE, ... WITH THE PROGRAM	:	
RECORDED THEREIN	:	

This decision is issued in response to the "Request For Corrected Filing Receipt And Notice Of Acceptance" filed 22 September 2009, treated herein as a petition under 37 CFR 1.181 to correct the 35 U.S.C. 371(c) date, and the "Second Request For Corrected Notice Of Acceptance" filed 30 September 2009, treated herein as a request for confirmation of applicants' foreign priority claim. No petition fee is required.

BACKGROUND

On 03 August 2007, applicants filed international application PCT/JP2007/065297. The international application claimed a priority date of 03 August 2006, and it designated the United States. On 07 February 2008, the International Bureau (IB) communicated a copy of the international application to the United States Patent and Trademark Office (USPTO). The deadline for submitting the basic national fee was thirty months from the priority date, i.e., 03 February 2009.

On 03 February 2009, applicants filed a Transmittal Letter requesting entry into the U.S. national stage accompanied by, among other materials, payment of the basic national fee and a translation into English of the international application.

On 26 February 2009, applicants filed an executed declaration in compliance with 37 CFR 1.497 and the authorization to charge Deposit Account No. 01-2340 the $130 surcharge for filing the oath or declaration later than thirty months after the priority date.

On 18 September 2009, the United States Designated/Elected Office (DO/EO/US) mailed a "Notification Of Acceptance" (Form PCT/DO/EO/903) identifying the "Date Of Receipt Of 35 U.S.C. 371(c)(1), (c)(2) and (c)(4) Requirements" and the "Date Of Completion Of All U.S.C.

371 Requirements" as 03 February 2009. Also on 18 September 2009, a filing receipt was issued that identified the 35 U.S.C. 371(c) date as 25 June 2009. The Notification Of Acceptance and the filing receipt did not list any earlier priority claim prior to PCT/JP2007/065297.

On 22 September 2009, applicants filed the first "Request For Corrected Filing Receipt And Notice Of Acceptance" considered herein. This submission seeks correction of the 35 U.S.C. 371(c) date from 03 February 2009 to 26 February 2009, as well as a correction in the listed number of independent claims.

On 30 September 2009, applicants filed the "Second Request For Corrected Notice Of Acceptance" considered herein. This submission seeks a corrected Notification Of Acceptance acknowledging applicants foreign priority claim of 03 August 2006.

DISCUSSION

1. Request to Correct 35 U.S.C. 371(c) Date

A review of the application file confirms that the executed declaration completing the requirements of 35 U.S.C. 371(c)(1), (c)(2), and (c)(4) was originally filed herein on 26 February 2009. Accordingly, as asserted by applicants in the present submission, the correct date under 35 U.S.C. 371(c)(1), (c)(2), and (c)(4) for the present application is 26 February 2009.

Based on the above, the Notification Of Acceptance and filing receipt mailed on 18 September 2009, which identified the 35 U.S.C. 371(c) date as 03 February 2009, are appropriately vacated.

A corrected Notification Of Acceptance and filing receipt will be issued which properly identify the 35 U.S.C. 371(c) date as 26 February 2009.

It is also noted that, as asserted by applicants, the amended claims appear to include four independent claims (claim numbers 1, 18, 41, and 42). Accordingly, the corrected filing receipt issued herein will also be corrected to indicate that the application contains four independent claims.

2. Request To Confirm Priority Claim

As set forth in the published international application, PCT/JP2007/065297 contains a claim of priority directed to prior-filed international application PCT/JP2006/315418, filed 03 August 2006. However, applicant has not made a proper assertion of priority with respect to PCT/JP2006/315418 in the present national stage application.

The declaration filed herein includes a claim of domestic priority claim under 35 U.S.C. 120 and 365(c) directed to PCT/JP2006/315418; however, such a priority claim requires an appropriate reference to the prior application in either the first sentence of the specification or in an application data sheet (ADS); see 37 CFR 1.78(a)(2)(iii). The present application does not include such a reference and, in that more than four months have passed since the filing of the

present application, the addition of any such domestic benefit claim would require a grantable petition under 37 CFR 1.78(a)(3).

If, in the alternative, applicants seek to assert herein a foreign priority claim under 35 U.S.C. 119(a)-(d) and 365(b) with respect to PCT/JP2006/315418, then applicants must set forth such a claim in either an ADS or a revised declaration; see MPEP section 201.13(II)(A). Until applicants properly assert the foreign priority claim herein, the requested confirmation of such priority claim in a revised Notification Of Acceptance or a corrected filing receipt is not appropriate.

CONCLUSION

The request to correct the 35 U.S.C. 371(c) date from 03 February 2009 to 26 February 2009 contained in the "Request For Corrected Filing Receipt And Notice Of Acceptance" filed 22 September 2009 is **GRANTED**.

The request to correct the Notification Of Acceptance to confirm a priority claim dated 03 August 2006 contained in the "Second Request For Corrected Notice Of Acceptance" filed 30 September 2009 is **DISMISSED** without prejudice. As noted above, a revised declaration or an ADS properly asserting a claim of foreign priority with respect to PCT/JP2006/315148 are required before such priority claim may be acknowledged herein.[1]

The Notification Of Acceptance (Form PCT/DO/EO/903) and filing receipt mailed 18 September 2009, which incorrectly identified the 35 U.S.C. 371(c) date as 03 February 2009, are hereby **VACATED**.

This application is being referred to the National Stage Processing Branch of the Office of PCT Operations for further processing in accordance with this decision, including the issuance of a corrected Notification of Acceptance (Form PCT /DO/EO/903) and filing receipt which properly identify the date under 35 U.S.C. 371(c)(1), (c)(2), and (c)(4) as 26 February 2009. The corrected filing receipt should also be corrected to properly identify the number of independent claims as four.

Richard M. Ross
Attorney Advisor
Office of PCT Legal Administration
Telephone: (571) 272-3296
Facsimile: (571) 273-0459

[1] If, as set forth in the present declaration, applicants are seeking to assert a claim of domestic priority under 35 U.S.C. 120 and 365(c) with respect to PCT/JP2006/315148, than a grantable petition under 37 CFR 1.78(a)(3) is required.

UNITED STATES PATENT AND TRADEMARK OFFICE

UNITED STATES DEPARTMENT OF COMMERCE
United States Patent and Trademark Office
Address: COMMISSIONER FOR PATENTS
P.O. Box 1450
Alexandria, Virginia 22313-1450
www.uspto.gov

APPLICATION NO.	FILING DATE	FIRST NAMED INVENTOR	ATTORNEY DOCKET NO.	CONFIRMATION NO.
12/376,212	02/03/2009	Malcolm Wootton	058586-00001	4766

7590 05/07/2010

CRAIN, CATON & JAMES
FIVE HOUSTON CENTER
1401 MCKINNEY, 17TH FLOOR
HOUSTON, TX 77010

EXAMINER
KOONTZ, TAMMY J

ART UNIT	PAPER NUMBER
3974	

NOTIFICATION DATE	DELIVERY MODE
05/07/2010	ELECTRONIC

DECISION DISMISSING PETITION UNDER 37 CFR 1.138(d)

The declaration of express abandonment will not be recognized

This is in response to the petition under 37 CFR 1.138(d), requesting for a refund of any previously paid search fee and excess claims fee in the above-identified application.

The petition is dismissed.

The express abandonment will **not** be recognized for the reason(s) indicated below:

1. ☐ The petition was not filed in sufficient time to permit the appropriate officials to recognize the abandonment before an examination has been made of the application. See 37 CFR 1.138(d).

2. ☐ The petition was not signed by a party authorized by 37 CFR 1.33(b)(1), (3) or (4).

3. ☒ The application is not an application filed under 35 U.S.C. 111(a) on or after December 8, 2004.

4. ☐ The petition for express abandonment under 1.138(d) is dismissed because the applicant did not pay any search fee and excess claims fees in the above-identified application.

Telephone inquiries should be directed to the Office of Data Management at (571) 272-4200.

Betty Powell

Patent Publication Branch
Office of Data Management

FORM PET651D (Rev. 08/07)

8UNITED STATES PATENT AND TRADEMARK OFFICE

17 FEB 2009

COMMISSIONER FOR PATENTS
UNITED STATES PATENT AND TRADEMARK OFFICE
P.O. BOX 1450
ALEXANDRIA, VA 22313-1450
www.uspto.gov

LAURENCE A. GREENBERG
LERNER GREENBERG STEMER LLP
P.O. BOX 2480
HOLLYWOOD, FL 33020

In re Application of: FINKE, Robert et al.	:	DECISION
U.S. Application No.: 12/376,376	:	ON
PCT Application No.: PCT/EP2007/056027	:	
Int. Filing Date: 18 June 2007	:	PETITION
Priority Date: 11 July 2006	:	UNDER
Atty Docket No.: SGL-2006/028	:	
For: COOLING DEVICE	:	37 CFR 1.137(b)

The petition to revive under 37 CFR 1.137(b) filed 04 February 2009 in the above-captioned application is hereby **GRANTED** as follows:

Applicant's statement that "the entire delay in filing the required reply from the due date for the required reply until the filing of a grantable petition under 37 CFR 1.137(b) was unintentional" meets the requirements of 37 CFR 1.137(b)(3).

A review of the application file reveals that applicant has submitted the basic national fee and the requirements of 37 CFR 1.137(b) have been satisfied. Therefore, the request to revive the application abandoned is granted as to the National stage in the United States of America.

This application is being forwarded to the United States Designated/Elected Office (DO/EO/US) for further processing in accordance with this decision, including preparation and mailing of a Notification of Missing Requirements under 35 U.S.C. 371 (Form PCT/DO/EO/905) indicating that an oath or declaration in compliance with 37 CFR 1.497 must be filed.

Leonard Smith
PCT Legal Examiner
Office of PCT Legal Administration

Harry C. Kim
PCT Special Programs Examiner
Office of PCT Legal Administration
Telephone: (571) 272-3285

UNITED STATES PATENT AND TRADEMARK OFFICE

1 3 FEB 2009

Commissioner for Patents
United States Patent and Trademark Office
P.O. Box 1450
Alexandria, VA 22313-1450
www.uspto.gov

LATHROP & GAGE LC
4845 PEARL EAST CIRCLE
SUITE 300
BOULDER CO 80301

In re Application of: FAN, Regis, S., et al.	:	
U.S. Application No: 12/376,540	:	
PCT No: PCT/US2007/069573	:	DECISION ON PETITION
International Filing Date: 23 May 2007	:	
Priority Date: 23 May 2006	:	
Atty Docket No.: 462760	:	
For: SATURATION OPTICS	:	

The petition for revival under 37 CFR 1.137(b) filed 05 February 2009 in the above-captioned application is hereby **GRANTED** as follows:

International application PCT/US2007/069573 became abandoned with respect to the United States at midnight on 23 November 2008 based on applicants' failure to request entry into national stage in the United States and pay the basic national fee prior to the expiration of thirty months from the priority date.

The present petition for revival was accompanied by payment of the petition fee and the "required reply" in the form of a request for entry into the U.S. national stage and payment of the basic national fee. In addition, the petition includes a statement that "the entire delay in filing the required reply from the due date for the required reply until the filing of a grantable petition under 37 CFR 1.137(b) was unintentional," satisfying the requirement of 37 CFR 1.137(b)(3).

Based on the above, the requirements of 37 CFR 1.137(b) have been satisfied. Accordingly, the request to revive the international application with respect to the U.S. is appropriately granted.

This application is being referred to the National Stage Processing Division of the Office of PCT Operations for further processing in accordance with this decision, including the mailing of a Notification Of Missing Requirements (Form PCT/DO/EO/905). It is noted that applicants have not submitted an oath or declaration in compliance with 37 CFR 1.497.

Richard M. Ross
Attorney Advisor
Office of PCT Legal Administration
Telephone: (571) 272-3296
Facsimile: (571) 273-0459

UNITED STATES PATENT AND TRADEMARK OFFICE

Commissioner for Patents
United States Patent and Trademark Office
P.O. Box 1450
Alexandria, VA 22313-1450
www.uspto.gov

MAIL

MAY 20 2010

DIRECTOR'S OFFICE
TECHNOLOGY CENTER 2600

FITZPATRICK CELLA HARPER & SCINTO
1290 Avenue of the Americas
NEW YORK NY 10104-3800

In re Application of	:	
TSUNEKAWA, KOJI et al.	:	DECISION ON REQUEST TO
Application No. 12/376,551	:	PARTICIPATE IN PATENT
Filed: April 17, 2009	:	PROSECUTION HIGHWAY
Attorney Docket No. 03507.000100.	:	PROGRAM AND PETITION
	:	TO MAKE SPECIAL UNDER
	:	37 CFR 1.102(d)

This is a decision on the request to participate in the PCT Patent Prosecution Highway (PPH) pilot program and the petition under 37 CFR 1.102(d), filed April 13, 2010 to make the above-identified application special.

The request and petition are **GRANTED**.

A grantable request to participate in the PCT-PPH pilot program and petition to make special require:

(1) The U.S. application be (a) a national stage entry of the corresponding PCT application, or (b) a national stage entry of another PCT application which claims priority to the corresponding PCT application, or (c) a national stage application that claims domestic/foreign priority to the corresponding PCT application, (d) a national application which forms the basis for the priority claim in the corresponding PCT application, or (e) a continuation application of the U.S. application which satisfies one of the above (a) to (d) scenarios.
(2) A copy of the latest international work product (WO/ISA, WO/IPEA, or IPER) in the corresponding PCT application(s) which indicates at least one claim in the PCT application has novelty, inventive step, and industrial applicability.
(3) A copy of all claims which were indicated as having novelty, inventive step and industrial applicability in the corresponding PCT application(s).
(4) English translations of the documents in (2) and (3) (if the documents are not in the English language).
(5) All the claims in the U.S. application must sufficiently correspond or be amended to sufficiently correspond to the claims which were indicated as having novelty, inventive step, and industrial applicability in the corresponding PCT application(s).
(6) Examination of the U.S. application has not begun;
(7) An information disclosure statement listing the documents cited in the international work products (ISR, WO/ISA. WO/IPEA, IPER) of the corresponding PCT application(s) and

(8) The petition fee under 37 CFR 1.17(h).

The request to participate in the PCT-PPH pilot program and petition comply with the above requirements. Accordingly, the above-identified application has been accorded "special" status.

Telephone inquiries concerning this decision should be directed to Michael Horabik at 571-272-3068.

All other inquiries concerning the examination or status of the application should be directed to Patent Application Information Retrieval (PAIR) system.

The application is being forwarded to the examiner for action on the merits commensurate with this decision.

/Michael Horabik/

Michael Horabik
Quality Assurance Specialist
Technology Center 2600
Communications

UNITED STATES PATENT AND TRADEMARK OFFICE

Commissioner for Patents
United States Patent and Trademark Office
P.O. Box 1450
Alexandria, VA 22313-1450
www.uspto.gov

06 APR 2010

Sughrue Mion, PLLC
2100 Pennsylvania Avenue, N.W.
Suite 800
Washington, D.C. 20037

In re Application of KINOUCHI et al. Application No.: 12/376,552 PCT No.: PCT/JP2007/065922 Int. Filing Date: 09 August 2007 Priority Date: 14 August 2006 Attorney Docket No.: Q106693 For: STAINLESS STEEL MEMBER FOR A FUEL CELL	DECISION REGARDING SUBMISSION UNDER 37 CFR 1.42

This decision is issued in response to the declaration filed 05 February 2009 which is being treated as a Submission under 37 CFR 1.42. No petition fee is required.

BACKGROUND

On 09 August 2007, applicant filed international application PCT/JP2007/065922 which claimed a priority date of 14 August 2007. On 21 February 2008, a copy of the international application was communicated to the United States Patent And Trademark Office ("USPTO") by the International Bureau. The deadline for payment of the basic national fee was 09 February 2009 (thirty months from the priority date).

On 05 February 2009, applicant filed a transmittal letter for entry into the national stage in the United States accompanied by, among other materials, payment of the basic national fee; a translation of the international application; an application data sheet; and a declaration executed by five joint-inventors and Kinuyo Shintani, on behalf of deceased inventor, Shouzou Shintani.

DISCUSSION

37 CFR 1.42 *When the Inventor is Dead*, states, in part:

> In case of the death of the inventor, the legal representative (executor, administrator, etc.) of the deceased inventor may make the necessary oath or declaration, and apply for and obtain the patent.

37 CFR 1.497(b)(2) states the following:

> (2) If the person making the oath or declaration or any supplemental oath or declaration is not the inventor (§§ 1.42, 1.43, or § 1.47) the oath or declaration shall state the relationship of the person to the inventor, and, upon information and belief, the facts which the inventor would have been required to state. If the person signing is the legal representative of a deceased inventor, the oath or declaration shall also state that the person is a legal representative and the citizenship, residence, and mailing address of the legal representative.

The declaration filed 05 February 2009 was executed by Kinuyo Shintani as "legal representative" to the deceased inventor, Shouzou Shintani. The declaration provides the residence, post office address, and country of citizenship for the deceased inventor and the legal representative. Therefore, the declaration is acceptable under 37 CFR 1.42 and complies with 37 CFR 1.497(a)-(b).

CONCLUSION

The papers filed under 37 CFR 1.42 are **ACCEPTED**.

This application is being forwarded to the National Stage Processing Branch of the International Division for continued national stage processing.

Anthony Smith
Attorney-Advisor
Office of PCT Legal Administration
Tel: (571) 272-3298
Fax: (571) 273-0459

UNITED STATES PATENT AND TRADEMARK OFFICE

Commissioner for Patents
United States Patent and Trademark Office
P.O. Box 1450
Alexandria, VA 22313-1450
www.uspto.gov

HUSCH BLACKWELL SANDERS LLP
720 OLIVE STREET
SUITE 2400
ST. LOUIS MO 63101

MAIL

APR 01 2009

DIRECTOR'S OFFICE
TECHNOLOGY CENTER 2600

In re Application of
RYU, JUNG-HEE
Application No. 12/376,664
Filed: February 06, 2009
Attorney Docket No. **502167.2**

DECISION ON REQUEST TO PARTICIPATE IN PATENT PROSECUTION HIGHWAY PILOT PROGRAM AND PETITION TO MAKE SPECIAL UNDER 37 CFR 1.102(d)

This is a decision on the request to participate in the Patent Prosecution Highway (PPH) pilot program and the petition under 37 CFR 1.102(d), filed February 06, 2009, to make the above-identified application special.

The request and petition are **GRANTED**.

A grantable request to participate in the PPH pilot program and petition to make special require:

(1) The U.S. application must validly claim priority under 35 U.S.C. 119(a) to one or more applications filed in the KIPO;
(2) Applicant must submit a copy of the allowable/patentable claim(s) from the KIPO application(s) along with an English translation thereof and a statement that the English translation is accurate;
(3) All the claims in the U.S. application must sufficiently correspond or be amended to sufficiently correspond to the allowable/patentable claim(s) in the KIPO application(s);
(4) Examination of the U.S. application has not begun;
(5) Applicant must submit a copy of all the office actions from each of the KIPO application(s) containing the allowable/patentable claim(s) along with an English translation thereof and a statement that the English translation is accurate;
(6) Applicant must submit an IDS listing the documents cited by the KIPO examiner in the KIPO office action along with copies of documents except U.S. patents or U.S. patent application publications; and
(7) The required petition fee under 37 CFR 1.17(h).

The request to participate in the PPH pilot program and petition comply with the above requirements. Accordingly, the above-identified application has been accorded "special" status.

Telephone inquiries concerning this decision should be directed to Kenneth Wieder at 571-272-2986.

All other inquiries concerning the examination or status of the application should be directed to Patent Application Information Retrieval (PAIR) system.

The application is being forwarded to the examiner for action on the merits commensurate with this decision.

Kenneth Wieder
Quality Assurance Specialist
Technology Center 2600
Communications

UNITED STATES PATENT AND TRADEMARK OFFICE

Commissioner for Patents
United States Patent and Trademark Office
P.O. Box 1450
Alexandria, VA 22313-1450
www.uspto.gov

ALSTON & BIRD LLP
BANK OF AMERICA PLAZA
101 SOUTH TRYON STREET, SUITE 4000
CHARLOTTE NC 28280-4000

MAILED

JUN 29 2010

OFFICE OF PETITIONS

In re Application of	:	
Hyong-Suk Kim	:	DECISION ON PETITION
Application No. 12/376,679	:	TO WITHDRAW
Filed: February 6, 2009	:	FROM RECORD
Attorney Docket No. 052983/367708	:	

This is a decision on the request to withdraw as attorney of record under 37 C.F.R. § 1.36, filed May 27, 2010.

The request is **NOT APPROVED**.

The Office will only accept correspondence address changes to the most current address information provided for the assignee of the entire interest *who properly became of record under 37 CFR 3.71,* or, if no assignee of the entire interest has properly been made of record, the most current address information provided for the first named inventor. 37 CFR 3.71(c) states:

An assignee becomes of record either in a national patent application or a reexamination proceeding by filing a statement in compliance with § 3.73(b) that is signed by a party who is authorized to act on behalf of the assignee.

Therefore, as there is currently no Statement under 37 CFR 3.73(b) of record in the instant application, the Office cannot change the correspondence address to the address on the Request to Withdraw. Further, petitioner has not properly completed the change of correspondence address portion of form PTO/SB/83. Petitioner has requested that both assignees each be separately sent all future correspondence. Double correspondence with the patent owner or owners will not be undertaken. Therefore, the request is considered improper. Petitioner must submit one correspondence address. As such, all future communications from the Office will continue to be directed to the above-listed address until otherwise notified by applicant.

Currently, there is no outstanding Office action that requires a reply.

Telephone inquires concerning this decision should be directed to the undersigned at (571) 272-7751. All other inquires concerning either the examination or status of the application should be directed to the Technology Center.

Joan Olszewski

Joan Olszewski
Petitions Examiner
Office of Petitions

UNITED STATES PATENT AND TRADEMARK OFFICE

Commissioner for Patents
United States Patent and Trademark Office
P.O. Box 1450
Alexandria, VA 22313-1450
www.uspto.gov

DICKINSON WRIGHT, PLLC
1875 EYE STREET, NW
SUITE 1200
WASHINGTON, DC 20006

MAILED

JUL 01 2010

OFFICE OF PETITIONS

In re Application of	:	
Gottwald et al.	:	DECISION ON PETITION
Application No. 12/376,693	:	TO WITHDRAW
Filed: January 27, 2010	:	FROM RECORD
Attorney Docket No. 2006P16438 (NSN)	:	

This is a decision on the Request to Withdraw as attorney or agent of record under 37 C.F.R. § 1.36(b), filed May 31, 2010.

The request is **NOT APPROVED** because it is moot.

A review of the file record indicates that on June 2, 2010 the power of attorney to Dickinson Wright, PLLC was revoked by the assignee of the patent application. Accordingly, the request to withdraw under 37 C.F.R. § 1.36(b) is moot.

All future communications from the Office will be directed to the below-listed address until otherwise notified by applicant.

Telephone inquires concerning this decision should be directed to the undersigned at 571-272- 7751. All other inquires concerning either the examination or status of the application should be directed to the Technology Center.

Joan Olszewski

Joan Olszewski
Petitions Examiner
Office of Petitions

cc: LERNER GREENBERG STEMER LLP
P O BOX 2480
HOLLYWOOD FL 33022-2480

UNITED STATES PATENT AND TRADEMARK OFFICE

Commissioner for Patents
United States Patent and Trademark Office
P.O. Box 1450
Alexandria, VA 22313-1450
www.uspto.gov

MAR 0 2 2010

BIRCH STEWART KOLASCH & BIRCH
P.O. BOX 747
FALLS CHURCH, VA 22040-0747

In re application of Akihiro Okamoto Application No. 12/376,748 Filed: February 6, 2009 For: PLANT CULTIVATION SYSTEM	**DECISION ON REQUEST TO PARTICIPATE IN PATENT PROSECUTION HIGHWAY PROGRAM AND PETITION TO MAKE SPECIAL UNDER 37 CFR 1.102(d)**

This is a decision on the request to participate in the Patent Prosecution Highway (PPH) program and the petition under 37 CFR 1.102(d), filed February 12, 2010, to make the above-identified application special.

The request and petition are **GRANTED**.

A grantable request to participate in the PPH program and petition to make special require:

(1) The U.S. application must validly claim priority under 35 U.S.C. 119(a) to one or more applications filed in the JPO;

(2) Applicant must submit a copy of the allowable/patentable claim(s) from the JPO application(s) along with an English translation thereof and a statement that the English translation is accurate;

(3) All the claims in the U.S. application must sufficiently correspond or be amended to sufficiently correspond to the allowable/patentable claim(s) in the JPO application(s);

(4) Examination of the U.S. application has not begun;

(5) Applicant must submit a copy of all the Office actions from each of the JPO application(s) containing the allowable/patentable claim(s) along with an English translation thereof and a statement that the English translation is accurate;

(6) Applicant must submit an IDS listing the documents cited by the JPO examiner in the JPO Office action along with copies of documents except U.S. patents or U.S. patent application publications; and

(7) The required petition fee under 37 CFR 1.17(h).

The request to participate in the PPH program complies with the above requirements. Therefore, the above-identified application has been accorded "special" status.

The application is undergoing pre-examination processing. Once it is released for examination, the application will be forwarded to the examiner for action on the merits commensurate with this decision.

Any inquiry regarding this decision should be directed to Teri P. Luu, Quality Assurance Specialist, at (571) 272-6611.

All other inquiries concerning the examination or status of the application should be directed to the Patent Application Information Retrieval (PAIR) system.

Teri P. Luu
Quality Assurance Specialist
Technology Center 3600

TL: 2/26/10

UNITED STATES PATENT AND TRADEMARK OFFICE

11 MAY 2010

Commissioner for Patents
United States Patent and Trademark Office
P.O. Box 1450
Alexandria, VA 22313-1450
www.uspto.gov

23416
CONNOLY BOVE LODGE & HUTZ, LLP
P.O. Box 2207
Wilmington, DE 19899

In re Application of
TIAN *et al*
U.S. Application No.: 12/376,845
PCT No.: PCT/CN2007/002401
Int. Filing Date: 10 August 2007
Priority Date: 11 August 2006
Docket No.: 15454-00010-US
For: SHORT DISTANCE WIRELESS COMMUNICATION SYSTEM AND METHOD FOR ACCESSING INSTANT MESSENGER

DECISION

Applicants' "Petition Under 37 CFR § 1.181 Requesting for the Expedited Issuance of Official Filing Receipt" filed 17 March 2010 is **DISMISSED** as moot for the following reason:

Applicants request that the Office expedite the mailing of a filing receipt so that counsel may receive funds from a Chinese government agency. No fee is required for this request.

A review of the above-captioned application shows that the United States Designated/Elected Office mailed a Notification of Acceptance of Application Under 35 U.S.C. 371 and 1.495 (Form PCT/DO/EO/903) and a filing receipt on 31 March 2010. Therefore, an official filing receipt has already been mailed. No further action is required.

This application is being forwarded to Group Art Unit 2447 for examination.

James Thomson
Attorney Advisor
Office of PCT Legal Administration

Tel.: (571) 272-3302

2 3 APR 2009

United States Patent and Trademark Office

Commissioner for Patents
United States Patent and Trademark Office
P.O. Box 1450
Alexandria, VA 22313-1450
www.uspto.gov

CORNING INCORPORATED
SP-TI-3-1
CORNING NY 14831

In re Application of	:	
Marques et al.	:	
Application No. 12/376,886	:	
PCT No.: PCT/EP2006/069500	:	
Int. Filing Date: 08 December 2006	:	DECISION
Priority Date: 09 December 2005	:	
Att. Docket No.: SP06-022	:	
For: Thermoelectric Device	:	

The petition to revive under 37 CFR 1.137(b) filed on 09 February 2009 in the above-captioned application is hereby **GRANTED** as follows:

Petitioner states that "the entire delay in filing the required reply from the due date for the reply until the filing of a grantable petition under 37 C.F.R. § 1.137(b) was unintentional." Said statement is being accepted in satisfaction of 37 CFR 1.137(b)(3).

A review of the application file reveals that applicant has paid the petition fee. The required reply (in the form of the basic national fee) has been filed. No terminal disclaimer is required. Therefore, the request to revive the application abandoned under 35 U.S.C. 371(d) is granted as to the national stage in the United States of America.

The declaration filed on 09 February 2009 is acceptable for purposes of compliance with 37 CFR 1.497(a) and (b). The surcharge under 37 CFR 1.492(h)(fee code 1617) will be charged to Deposit Account 03-3325, per the Transmittal Letter filed on 09 February 2009.

This application is being forwarded to the Office of Patent Application Processing for further processing. Its date under 35 U.S.C. 371(c)(1), (2) and (4) is **09 February 2009**.

/George Dombroske/
George Dombroske
PCT Legal Examiner
Office of PCT Legal Administration
Tel: (571) 272-3283
Fax: (571) 273-0459

1 4 AUG 2009

UNITED STATES PATENT AND TRADEMARK OFFICE

Commissioner for Patents
United States Patent and Trademark Office
P.O. Box 1450
Alexandria, VA 22313-1450
www.uspto.gov

Conley Rose, P.C.
5601 Granite Parkway, Suite 750
Plano TX 75024

In re Application of	:	
SUBRAMANIYAM, Mahesh	:	
Application No.: 12/376,962	:	DECISION ON PETITION
PCT No.: PCT/IN2007/000360	:	UNDER 37 CFR 1.137(b)
Int. Filing Date: 21 August 2007	:	
Priority Date: 22 August 2006	:	
Attorney Docket No.: 2123-02200	:	
For: METHOD OF REMOVAL OF CALCIUM FROM HYDROCARBON FEEDSTOCK	:	

The petition to revive under 37 CFR 1.137(b) filed 04 August 2009 in the above-captioned application is hereby GRANTED as follows:

Applicant's statement that "the entire delay in filing the required reply from the due date for the reply until the filing of a grantable petition under 37 CFR 1.137(b) was unintentional" meets the requirements of 37 CFR 1.137(b)(3).

A review of the application file reveals that applicant has submitted the basic national fee and the requirements of 37 CFR 1.137(b) have been satisfied. Therefore, the request to revive the application abandoned under 35 U.S.C. 371(d) is granted as to the National stage in the United States of America.

This application is being returned to the United States Designated/Elected Office for processing in accordance with this decision.

Anthony Smith
Attorney-Advisor
Office of PCT Legal Administration
Tel: (571) 272-3298
Fax: (571) 273-0459

UNITED STATES PATENT AND TRADEMARK OFFICE

COMMISSIONER FOR PATENTS
UNITED STATES PATENT AND TRADEMARK OFFICE
P.O. BOX 1450
ALEXANDRIA, VA 22313-1450
www.uspto.gov

1 7 JUN 2009

CONLEY ROSE, P.C.
5601 GRANITE PARKWAY, SUITE 750
PLANO, TX 75024

In re Application of LULLA et al	:	
U.S. Application No.: 12/377,038	:	
PCT Application No.: PCT/GB2007/003061	:	
Int. Filing Date: 10 August 2007	:	
Priority Date Claimed: 10 August 2006	:	DECISION
Attorney Docket No.: PAC/26462 US (4137-04800)	:	
For: ANTIRETROVIRAL SOLID ORAL	:	
COMPOSITION WITH AT LEAST ONE	:	
WATER INSOLUBLE POLYMER	:	

This is in response to applicant's "Petition for Revival of an International Application for Patent Designating the U.S. Abandoned Unintentionally Under 37 CFR 1.137(b)" filed 08 May 2009.

BACKGROUND

On 10 August 2007, applicant filed international application PCT/GB2007/003061, which claimed priority of an earlier India application filed 10 August 2006. A copy of the international application was communicated to the USPTO from the International Bureau on 14 February 2008. The thirty-month period for paying the basic national fee in the United States expired on 10 February 2009.

On 10 February 2009, applicant filed national stage papers in the United States Designated/Elected Office (DO/EO/US). The submission was not accompanied by the basic national fee required by 35 U.S.C. 371(c)(1).

On 11 February 2009, international application PCT/GB2007/003061 became abandoned as to the United States for failure to timely pay the basic national fee.

On 08 May 2009, applicant filed the present petition under 37 CFR 1.137(b).

DISCUSSION

Under 37 CFR 1.137(b), a petition requesting that an application be revived on the grounds of unintentional abandonment must be accompanied by: (1) the required reply unless previously filed, (2) the petition fee as set forth in 37 CFR 1.17(m), (3) a statement that the entire delay in filing the required reply from the due date for the reply until the filing of a grantable petition was unintentional, and (4) a terminal disclaimer if the application was filed before 08 June 1995.

With regard to item (1), applicant has provided the required reply under 35 U.S.C. 371.

With regard to item (2), applicant has provided the required petition fee.

With regard to item (3), applicant has provided the required statement.

With regard to item (4), because the international application was filed after 08 June 1995, no terminal disclaimer is required.

CONCLUSION

For the reasons above, the petition under 37 CFR 1.137(b) is GRANTED.

The application has an International Filing Date under 35 U.S.C. 363 of 10 August 2007, and a date under 35 U.S.C. 371(c)(1), (c)(2), and (c)(4) of 15 April 2009.

This application is being forwarded to the United States Designated/Elected Office (DO/EO/US) for further processing in accordance with this decision.

Bryan Lin

Bryan Lin
PCT Legal Examiner
PCT Legal Office

Telephone: 571-272-3303
Facsimile: 571-273-0459

United States Patent and Trademark Office

~~Commissioner for Patents~~
United States Patent and Trademark Office
P.O. Box 1450
Alexandria, VA 22313-1450
www.uspto.gov

MAIL

MAY 07 2009
DIRECTOR'S OFFICE
TECHNOLOGY CENTER 2600

GREENBERG TRAURIG LLP (LA)
2450 COLORADO AVENUE, SUITE 400E
INTELLECTUAL PROPERTY DEPARTMENT
SANTA MONICA CA 90404

In re Application of:
RUBINS, TYE et al
Serial No.: 12/337,156
Filed: December 17, 2008

Title: **AUDIO COORDINATED VISUAL INDICATOR**

DECISION ON PETITION TO MAKE SPECIAL FOR NEW APPLICATION UNDER 37 C.F.R. § 1.102 & M.P.E.P. § 708.02

This is a decision on the petition filed December 17, 2008 to make the above-identified application special for accelerated examination procedure under 37 C.F.R. § 1.102(d).

The petition to make the application special is **GRANTED**.

The application is eligible for accelerated examination and the petition complies with the conditions for granting the application special status pursuant to the "Change to Practice for Petitions in Patent Applications to Make Special and for Accelerated Examination" published June 26, 2006, in the Federal Register. (71 Fed. Reg. 36323).

The prosecution of the instant application will be conducted expeditiously according to the following guidelines.

1. The application will be docketed to an examiner and taken up for action within two weeks of the date of this decision.

2. Restriction Practice:
   If the examiner determines that the claims are not directed to a single invention, a telephone request to elect one single invention will be made pursuant to MPEP 812.01. As a prerequisite to the grant of this petition, the applicant has agreed to make an oral election, by telephone, without traverse. If the applicant refuses to make an election without traverse, or the examiner cannot reach the applicant after a reasonable effort, the examiner will treat the first claimed invention (invention defined by claim 1) as having being constructively elected without traverse for examination.

3. Office action:

If it is determined that, after appropriate consultation, there is a potential rejection or any other issue to be addressed, the examiner will telephone the applicant and arrange an interview to discuss and resolve the issue. An Office action, other than a Notice of Allowance and Fee(s) Due (Notice of Allowance), will not be issued unless either: 1) an interview was conducted but did not result in agreed to action that places the application in condition for allowance, or, 2) a determination is made that an interview would be unlikely to result in the application being placed in condition for allowance, and 3) an internal conference has been held to review any rejection of any claim.

4. Time for Reply:
An Office action other than a Notice of Allowance or a final Office action will set a shortened statutory period of one month or thirty days, whichever is longer, for reply with no extension of time available under 37 CFR 1.136(a). Failure to timely file a reply within this non-extendible period for reply will result in the abandonment of the application.

5. Reply by Applicant:
A timely reply to an Office action other than the Notice of Allowance must be submitted electronically via EFS or EFS-web and limited to addressing the rejections, objections and requirement made. Any amendment that attempts to: 1) add claims which would result in more than three pending independent claims or more than twenty pending total claims; 2) present claims not encompassed by the pre-examination search or an updated accelerated examination support document; or 3) present claims that are directed a non-elected invention or an invention other than that previously claimed and examined in the application, will be treated as not fully responsive and will not be entered.

   For any amendment to the claims (including any new claim) that is not encompassed by the accelerated examination support document, applicant must provide an updated accelerated examination support document that encompasses the amended or new claims at the time of filing of the amendment.

   To proceed expeditiously with the examination, it is recommended that a reply with amendments made to any claim or with any new claim being added be accompanied by an updated accelerated examination support document or a statement explaining how the amended or new claim is supported by the original accelerated examination support document.

6. Information Disclosure Statement (IDS):
Any IDS filed during prosecution must be submitted electronically via EFS or EFS-web, accompanied by an updated accelerated examination support document, and be in compliance with 37 CFR 1.97 and 1.98.

7. Post-Allowance Processing:
To expedite processing of the allowed application into a patent, the applicant must: 1) pay the required fees within one month of the date of the Notice of Allowance, and 2) not file any post allowance papers not required by the Office. In no event may the issue fee be paid and accepted later than three months from the date of the Notice of Allowance.

8. After-Final and Appeal Procedures:
   To expedite prosecution, after receiving the final Office action, applicant must: 1) promptly file a notice of appeal, an appeal brief and appeal fees; and 2) not request a pre-appeal brief conference.

   Any amendment, affidavit or other evidence filed after final Office action must comply with applicable rules and the requirements outlined in numbered paragraphs 5 and 6 above.

   On appeal, the application will proceed according to normal appeal procedures. After appeal, the application will again be treated special.

9. Proceedings Outside the Normal Examination Process:
   If the application becomes involved in a proceeding that is outside the normal examination process (e.g., a secrecy order, national security review, interference proceeding, petitions under 37 CFR 1.181, 182 or 183), the application will be treated special before and after such proceeding.

10. Final Disposition:
    The twelve month goal of this accelerated examination procedure ends with a final disposition. The mailing of a final Office action, a Notice of Allowance, the filing of a Notice of Appeal, or the filing of a Request for Continued Examination (RCE) is the final disposition.

If, during prosecution, a paper is not filed electronically using EFS-web, a reply is filed but is not fully responsive, the application is involved in an appeal, or a proceeding outside normal examination process, the application will still be examined expeditiously, however, the final disposition may occur more than twelve months from the filing of the application.

Any inquiry regarding this decision should be directed to Michael Horabik, Quality Assurance Specialist, at (571) 272-3068.

Michael Horabik
Quality Assurance Specialist
Technology Center 2600
Communications

UNITED STATES PATENT AND TRADEMARK OFFICE

COMMISSIONER FOR PATENTS
UNITED STATES PATENT AND TRADEMARK OFFICE
P.O. BOX 1450
ALEXANDRIA, VA 22313-1450
www.uspto.gov

18 MAR 2009

SALTER & MICHAELSON
THE HERITAGE BUILDING
321 SOUTH MAIN STREET
PROVIDENCE, RI 02903-7128

In re Application of AJIB	:	
U.S. Application No.: 12/377,158	:	
PCT Application No.: PCT/TR2006/000019	:	
Int. Filing Date: 12 May 2006	:	DECISION
Priority Date Claimed: none	:	
Attorney Docket No.: 03026	:	
For: DESCRIPTION ELECTRO-AGEEB	:	
ELECTRICAL SAFETY DEVICE	:	

This is in response to applicant's "Petition for Revival of an International Application for Patent Designating the U.S. Abandoned Unintentionally Under 37 CFR 1.137(b)" filed 11 February 2009.

BACKGROUND

On 12 May 2006, applicant filed international application PCT/TR2006/000019. A copy of the international application was communicated to the USPTO from the International Bureau on 22 November 2007. The thirty-month period for paying the basic national fee in the United States expired on 12 November 2008.

On 13 November 2008, international application PCT/TR2006/000019 became abandoned as to the United States for failure to timely pay the basic national fee.

On 11 February 2009, applicant filed the present petition under 37 CFR 1.137(b).

DISCUSSION

Under 37 CFR 1.137(b), a petition requesting that an application be revived on the grounds of unintentional abandonment must be accompanied by: (1) the required reply unless previously filed, (2) the petition fee as set forth in 37 CFR 1.17(m), (3) a statement that the entire delay in filing the required reply from the due date for the reply until the filing of a grantable petition was unintentional, and (4) a terminal disclaimer if the application was filed before 08 June 1995.

With regard to item (1), applicant has provided the required reply under 35 U.S.C. 371.

With regard to item (2), applicant has provided the required petition fee.

With regard to item (3), applicant has provided the required statement.

With regard to item (4), because the international application was filed after 08 June 1995, no terminal disclaimer is required.

CONCLUSION

For the reasons above, the petition under 37 CFR 1.137(b) is GRANTED.

This application is being forwarded to the United States Designated/Elected Office (DO/EO/US) for further processing in accordance with this decision, including preparation and mailing of a Notification of Missing Requirements under 35 U.S.C. 371 (Form PCT/DO/EO/905) indicating that an oath or declaration in compliance with 37 CFR 1.497 must be filed.

Bryan Lin
Bryan Lin
PCT Legal Examiner
PCT Legal Office

Telephone: 571-272-3303
Facsimile: 571-273-0459

19 MAR 2009

UNITED STATES PATENT AND TRADEMARK OFFICE

Commissioner for Patents
United States Patent and Trademark Office
P.O. Box 1450
Alexandria, VA 22313-1450
www.uspto.gov

AGILENT TECHNOLOGIES INC.
INTELLECTUAL PROPERTY ADMINISTRATION,LEGAL DEPT.
MS BLDG. E P.O. BOX 7599
LOVELAND CO 80537

In re Application of	:	
FALK-JORDAN, Stefan et al.	:	
Application No.: 12/377,179	:	DECISION
PCT No.: PCT/US2006/065047	:	
Int. Filing Date: 03 August 2006	:	ON PETITION UNDER
Priority Date: None	:	
Docket No.: 20060221-04	:	37 CFR 1.137(b)
For: CHANNELLESS FLUIDIC SAMPLE	:	
TRANSPORT MEDIUM	:	

Applicant's Petition to Revive Under 37 CFR §1.137(b), filed in the above-captioned application on 11 February 2009 is **GRANTED**.

Applicant states that the entire delay in filing the required reply from the due date for the required reply until the filing of a grantable petition under 37 CFR 1.137(b) was unintentional, as required by 37 CFR 1.137(b)(3). The appropriate national fee and petition fee have been submitted. A terminal disclaimer is not required as the application was filed on or after 08 June 1995. Accordingly, all requirements under 37 CFR 1.137(b) have been satisfied.

A signed oath or declaration has not yet been submitted. The fee for late filing of the search fee, examination fee, or oath or declaration will be charged to deposit account no. 50-1078, as authorized.

This application is being referred to the National Stage Processing Branch of the Office of Patent Application Processing for continued processing in accordance with this decision, including the mailing of a Notification of Missing Requirements (Form PCT/DO/EO/905) indicating that an oath or declaration is required.

/Erin P. Thomson/

Erin P. Thomson
Attorney Advisor
PCT Legal Administration

Telephone: 571-272-3292
Facsimile: 571-273-0459

UNITED STATES PATENT AND TRADEMARK OFFICE

11 MAR 2009

Commissioner for Patents
United States Patent and Trademark Office
P.O. Box 1450
Alexandria, VA 22313-1450

Fleit Gibbons Gutman Bongini & Bianco PL
21355 EAST DIXIE HIGHWAY
SUITE 115
MIAMI FL 33180

In re Application of:	:	
SAREL et al.	:	DECISION ON PETITION
U.S. Application No.: 12/377,213	:	UNDER 37 CFR 1.137(b)
Int'l Application No: PCT/IL07/00768	:	
Int'l Filing Date: 25 June 2007	:	
Priority Date: 25 June 2006	:	
Atty Docket No.: 7057-X09-073	:	
For: MEANS AND METHOD OF	:	
OBTAINING AND PROCESSING	:	
DATA FOR USE IN MEDICAL.....		

The petition to revive under 37 CFR 1.137(b) filed 11 February 2009 in the above-captioned application is hereby **GRANTED** as follows:

Applicants' statement that "the entire delay in filing the required reply from the due date for the required reply until the filing of a grantable petition under 37 CFR 1.137(b) was unintentional" satisfies the requirement of 37 CFR 1.137(b)(3).

Applicants have now submitted the small entity basic national fee, and the requirements of 37 CFR 1.137(b) have been satisfied. Therefore, the request to revive the application is granted as to the United States of America.

This application is being referred to the National Stage Processing Branch of the Office of PCT Operations for further processing. The 35 U.S.C. 371(c)(1), (c)(2) and (c)(4) date is 11 February 2009.

Cynthia M. Kratz

Cynthia M. Kratz
Attorney Advisor
Office of PCT Legal Administration
Telephone: (571) 272-3286
Facsimile: (571) 273-0459

UNITED STATES PATENT and TRADEMARK OFFICE

2 7 JAN 2010

COMMISSIONER FOR PATENTS
UNITED STATES PATENT AND TRADEMARK OFFICE
P.O BOX 1450
ALEXANDRIA, VA 22313-1450
www.uspto.gov

OLIFF & BERRIDGE, PLC
P.O. BOX 320850
ALEXANDRIA VA 22320-4850

In re Application of	:	DECISION ON
SHAPIRA et al	:	
Application No.: 12/377,341	:	
PCT No.: PCT/IL07/01011	:	
Int. Filing Date: 13 August 2007	:	PETITION
Priority Date: 13 August 2006	:	
Attorney's Docket No.: 140571	:	
For: SYSTEM AND METHOD FOR...	:	UNDER 37 CFR 1.182
A BUSINESS PROCESS	:	

This decision is in response to the "REQUEST TO CORRECT LINK TO INTERNATIONAL APPLICATION NUMBER AND CONTINGENT PETITION FOR EXPUNGE," filed on 28 August 2009, which is being treated as a petition under 37 CFR 1.182 to accept entry of the above identified application into the national stage with the corrected PCT number of PCT/IL07/01011. Petitioner has been charged the petition fee of $400.00 to the Deposit Account No.: 15-0461.

BACKGROUND

On 13 August 2007, this international application was filed, claiming an earliest priority date of 13 August 2006.

On 12 February 2009, applicants filed a transmittal letter for entry into the national stage in the United States. However, the incorrect PCT number (PCT/IB07/01011) was submitted at the time of filing via EFS-WEB.

On 28 August 2009, petitioner filed a petition under 37 CRF 1.182 stating that at the time of filing the application, the international application number due to a typographical error was inadvertently keyed into EFS-WEB incorrectly as PCT/IB07/01011 rather than the correct number of PCT/IL07/01011.

DISCUSSION

Petitioner states that the PCT number was incorrectly entered as PCT/IB07/01011 rather than the correct number PCT/IL07/01011.

Although applicants entered the incorrect PCT serial number at the time of filing the application via EFS-WEB, the correct number PCT/IL07/01011 was placed on the Transmittal Letter and the Declaration. Accordingly, there is sufficient evidence that the correct international application PCT number is PCT/IL07/01011.

Therefore, petition to accept the correct PCT number of PCT/IL07/01011 for the instant application is granted, and will be reflected in the filing receipt.

The correct international application PCT/IL07/01011 will be matched with the above national stage application. Also, the papers linked to PCT/IB07/01011 will be removed from the above national stage application.

DECISION

The petition under 37 CFR 1.182 is **GRANTED**.

The application is being returned to the United States Designated/Elected Office (DO/EO/US) for processing in accordance with this decision.

Rafael Bacares
PCT Legal Examiner
PCT Legal Office
Telephone: (571) 272-3276
Facsimile: (571) 273-0459

UNITED STATES PATENT AND TRADEMARK OFFICE

SEP 0 3 2009

Commissioner for Patents
United States Patent and Trademark Office
P.O. Box 1450
Alexandria, VA 22313-1450
www.uspto.gov

CONNOLLY BOVE LODGE & HUTZ LLP
1875 EYE STREET, N.W.
SUITE 1100
WASHINGTON DC 20006

In re Application of	:	
Choi, Wonmun	:	DECISION ON REQUEST TO
Application No. 12/377,492	:	PARTICIPATE IN PATENT
Filed: 02/13/2009	:	PROSECUTION HIGHWAY
Attorney Docket No. 21713-00123-US1	:	PROGRAM AND PETITION
	:	TO MAKE SPECIAL UNDER
	:	37 CFR 1.102(d)

This is a decision on the request to participate in the Patent Prosecution Highway (PPH) program and the petition under 37 CFR 1.102(d), filed July 27, 2009, to make the above-identified application special.

The request and petition are **GRANTED**.

A grantable request to participate in the PPH program and petition to make special require:

(1) The U.S. application must validly claim priority under 35 U.S.C. 119(a) to one or more applications filed in the JPO;
(2) Applicant must submit a copy of the allowable/patentable claim(s) from the JPO application(s) along with an English translation thereof and a statement that the English translation is accurate;
(3) All the claims in the U.S. application must sufficiently correspond or be amended to sufficiently correspond to the allowable/patentable claim(s) in the JPO application(s);
(4) Examination of the U.S. application has not begun;
(5) Applicant must submit a copy of all the office actions from each of the JPO application(s) containing the allowable/patentable claim(s) along with an English translation thereof and a statement that the English translation is accurate;
(6) Applicant must submit an IDS listing the documents cited by the JPO examiner in the JPO office action along with copies of documents except U.S. patents or U.S. patent application publications; and
(7) The required petition fee under 37 CFR 1.17(h).

The request to participate in the PPH program and petition comply with the above requirements. Accordingly, the above-identified application has been accorded "special" status.

Telephone inquiries concerning this decision should be directed to Ram R. Shukla at 571-272-0735.

All other inquiries concerning the examination or status of the application should be directed to Patent Application Information Retrieval (PAIR) system at the http://www.uspto.gov/ebc/index.html.

The application is being forwarded to the examiner for action on the merits commensurate with this decision.

Ram R. Shukla, Ph.D.
Supervisory Patent Examiner
TC 1600

RAM R. SHUKLA, PH.D.
SUPERVISORY PATENT EXAMINER

UNITED STATES PATENT AND TRADEMARK OFFICE

Commissioner for Patents
United States Patent and Trademark Office
P.O. Box 1450
Alexandria, VA 22313-1450
www.uspto.gov

25 FEB 2009

Philips Intellectual Property & Standards
P.O. Box 3001
Briarcliff Manor, NY 10510

In re Application of CORDEIRO et al. Application No.: 12/377,642 PCT No.: PCT/IB07/52796 Int. Filing Date: 12 July 2007 Priority Date: 14 July 2006 Attorney Docket No.: 006534US3 For: METHOD AND SYSTEM OF BEACON TRANSMISSION AND RECEPTION	:	DECISION ON PETITION UNDER 37 CFR 1.137(b)

The petition to revive under 37 CFR 1.137(b) filed 16 February 2009 in the above-captioned application is hereby **GRANTED** as follows:

Applicant's statement that "the entire delay in filing the required reply from the due date for the reply until the filing of a grantable petition under 37 CFR 1.137(b) was unintentional" meets the requirements of 37 CFR 1.137(b)(3).

A review of the application file reveals that applicant has submitted the basic national fee and the requirements of 37 CFR 1.137(b) have been satisfied. Therefore, the request to revive the application abandoned under 35 U.S.C. 371(d) is granted as to the National stage in the United States of America.

This application is being returned to the United States Designated/Elected Office for processing in accordance with this decision.

Anthony Smith
Attorney-Advisor
Office of PCT Legal Administration
Tel: (571) 272-3298
Fax: (571) 273-0459

UNITED STATES PATENT AND TRADEMARK OFFICE

Commissioner for Patents
United States Patent and Trademark Office
P.O. Box 1450
Alexandria, VA 22313-1450
www.uspto.gov

KANESAKA BERNER AND PARTNERS LLP
1700 DIAGONAL RD
SUITE 310
ALEXANDRIA VA 22314-2848

In re Application of	:	
UCHINO et al.	:	DECISION ON PETITION
Application No. 12/377,898	:	TO MAKE SPECIAL UNDER
Filed: 18 February 2009	:	THE GREEN TECHNOLOGY
Attorney Docket No. OLI-037	:	PILOT PROGRAM

This is a decision on the petition under 37 CFR 1.102, filed December 23, 2009, to make the above-identified application special under the pilot program for applications pertaining to Green Technologies as set forth 74 Federal Register Notice 64666 (December 8, 2009).

The petition is **GRANTED**.

A grantable petition to make an application special under 37 CFR 1.102 and the pilot program as set forth in 74 FR 64666 must be directed to a nonprovisional application filed under 35 USC 111(a) or be a national stage entry under 35 USC 371, exclusive of any reissue applications and be filed prior to the date of the notice, December 8, 2009.

In order to qualify for special status, the following requirements must be met. 1) The application must be classified in one of the eligible US classifications listed in section VI of the notice. 2) The application must have no more than 3 independent claims and no more than 20 total claims. 3) The application must not contain any multiple dependent claims. 4) The petition must state the basis for seeking special status, i.e., the claimed invention either: A) materially enhances the quality of the environment or B) materially contributes to: i) the discovery or development of renewable energy resources, ii) the more efficient utilization and conservation of energy resources, or iii) greenhouse gas emission reduction. 5) If the disclosure is not clear on its face that the claimed invention materially contributes under category (A) or (B), the petition must be accompanied by a statement by the applicant, assignee, or an attorney/agent registered to practice before the Office explaining how the materiality standard is met. 6) A statement that applicant will agree to make an election without traverse in a telephonic interview if a restriction requirement is made by the examiner. 7) The petition to make special must be filed electronically. 8) The petition must be filed at least one day prior to the date that a first Office Action appears in the Patent Application Information Retrieval (PAIR) system. 9) The petition must be accompanied by a request for early publication in compliance with 37 CFR 1.219 and include the publication fee as set forth in 37 CFR 1.18(d).

The requirement for a fee for consideration of the petition to make special for applications pertaining to Green Technologies has been waived.

The instant petition complies with items 1 – 9 above. Accordingly, the above-identified application has been accorded "special" status.

Telephone inquires concerning this decision should be directed to Lee W. Young at 571-272-4549.

The application is being forwarded to the Technology Center Art Unit 2839 for action on the merits commensurate with this decision.

Lee W. Young
Quality Assurance Specialist
Technology Center 2800

UNITED STATES PATENT AND TRADEMARK OFFICE

UNITED STATES DEPARTMENT OF COMMERCE
United States Patent and Trademark Office
Address: COMMISSIONER FOR PATENTS
P.O. Box 1450
Alexandria, Virginia 22313-1450
www.uspto.gov

APPLICATION NO.	FILING DATE	FIRST NAMED INVENTOR	ATTORNEY DOCKET NO.	CONFIRMATION NO.
12/377,920		Chiyuki SHIMAZU	3642-103	1684

6449 7590 09/23/2009
ROTHWELL, FIGG, ERNST & MANBECK, P.C.
1425 K STREET, N.W.
SUITE 800
WASHINGTON, DC 20005

EXAMINER

ART UNIT	PAPER NUMBER
2837	

NOTIFICATION DATE	DELIVERY MODE
09/23/2009	ELECTRONIC

Please find below and/or attached an Office communication concerning this application or proceeding.

The time period for reply, if any, is set in the attached communication.

Notice of the Office communication was sent electronically on above-indicated "Notification Date" to the following e-mail address(es):

PTO-PAT-Email@rfem.com

UNITED STATES PATENT AND TRADEMARK OFFICE

Commissioner for Patents
United States Patent and Trademark Office
P.O. Box 1450
Alexandria, VA 22313-1450
www.uspto.gov

ROTHWELL, FIGG, ERNST & MANBECK, P.C.
1425 K STREET, N.W.
SUITE 800
WASHINGTON, D.C. 20005

In re Application of	
Chiyuki SHIMAZU	**: DECISION ON REQUEST TO**
Application No.: 12/377,920	**: PARTICIPATE IN THE PATENT**
Filed: 18 February 2009	**: PROSECUTION HIGHWAY**
Attorney Docket No.: 3642-103	**: PROGRAM AND PETITION**
For: TRANSFORMING APPARATUS FOR AUTOMATICALLY ADJUSTING THREE-PHASE POWER SUPPLY VOLTAGE	**: TO MAKE SPECIAL UNDER : 37 CFR 1.102(d)**

This is a decision on the request to participate in the Patent Prosecution Highway (PPH) program and the petition under 37 CFR 1.102(d), filed 14 July 2009, to make the above-identified application special.

The request and petition are **GRANTED**.

Discussion

A grantable request to participate in the PPH pilot program and petition to make special require:

1. The U.S. application is

    a. a Paris Convention application which either
        i. validly claims priority under 35 U.S.C. 119(a) and 37 CFR 1.55 to one or more applications filed in the JPO, or
        ii. validly claims priority to a PCT application that contains no priority claims,

    or

    b. a national stage application under the PCT (an application which entered the national stage in the U.S. from a PCT international application after compliance with 35 U.S.C. 371), which PCT application
        i. validly claims priority to an application filed in the JPO, or
        ii. validly claims priority to a PCT application that contains no priority claims, or
        iii. contains no priority claim,

    or

c. a so-called bypass application filed under 35 U.S.C. 111(a) which validly claims benefit under 35 U.S.C. 120 to a PCT application, which PCT application
    i. validly claims priority to an application filed in the JPO, or
    ii. validly claims priority to a PCT application that contains no priority claims, or
    iii. contains no priority claim;

2. Applicant must submit a copy of:
    a. The allowable/patentable claim(s) from the JPO application(s);
    b. An English translation of the allowable/patentable claim(s) and
    c. A statement that the English translation is accurate;
3. Applicant must:
    a. Ensure all the claims in the U.S. application must sufficiently correspond or be amended to sufficiently correspond to the allowable/patentable claim(s) in the JPO application(s) and
    b. Submit a claims correspondence table in English;
4. Examination of the U.S. application has <u>not</u> begun;
5. Applicant must submit:
    a. Documentation of prior office action:
        i. a copy of the office action(s) just prior to the "Decision to Grant a Patent" from each of the JPO application(s) containing the allowable/patentable claim(s) or
        ii. if the allowable/patentable claims(s) are from a "Notification of Reasons for Refusal" then the Notification of Reasons for Refusal or
        iii. if the JPO application is a first action allowance then no office action from the JPO is necessary should be indicated on the request/petition form;
    b. An English language translation of the JPO Office action from (5)(a)(i)-(ii) above
    c. A statement that the English translation is accurate;
6. Applicant must submit:
    a. An IDS listing the documents cited by the JPO examiner in the JPO office action (unless already submitted in this application)
    b. Copies of the documents except U.S. patents or U.S. patent application publications (unless already submitted in this application);
7. The required petition fee under 37 CFR 1.17(h).

The request to participate in the PPH pilot program and petition comply with the above requirements. Accordingly, the above-identified application has been accorded "special" status.

Telephone inquiries concerning this decision should be directed to Darren Schuberg at 571-272-2044.

All other inquiries concerning the examination or status of the application is accessible in the PAIR system at http://www.uspto.gov/ebc.index.html.

This application will be forwarded to the examiner for action on the merits commensurate with this decision once this application's formality reviews have been completed.

Darren Schuberg
TQAS-Technology Center 2800

UNITED STATES PATENT AND TRADEMARK OFFICE

Commissioner for Patents
United States Patent and Trademark Office
P.O. Box 1450
Alexandria, VA 22313-1450
www.uspto.gov

MAIL

MAY 18 2010

DIRECTOR'S OFFICE
TECHNOLOGY CENTER 2600

OSHA LIANG L.L.P.
TWO HOUSTON CENTER
909 FANNIN, SUITE 3500
HOUSTON TX 77010

In re Application of	:	
NAGATA, SATOSHI, et al.	:	DECISION ON REQUEST TO
Application No. 12/377,932	:	PARTICIPATE IN PATENT
Filed: February 18, 2009	:	PROSECUTION HIGHWAY
Attorney Docket No. **17401/131001**	:	PROGRAM AND PETITION
	:	TO MAKE SPECIAL UNDER
	:	37 CFR 1.102(d)

This is a decision on the request to participate in the Patent Prosecution Highway (PPH) program and the petition under 37 CFR 1.102(d), filed April 15, 2010 to make the above-identified application special.

The request and petition are **GRANTED**.

A grantable request to participate in the PPH program and petition to make special require:

(1) The U.S. application must validly claim priority under 35 U.S.C. 119(a) to one or more applications filed in the JPO;
(2) Applicant must submit a copy of the allowable/patentable claim(s) from the JPO application(s) along with an English translation thereof and a statement that the English translation is accurate;
(3) All the claims in the U.S. application must sufficiently correspond or be amended to sufficiently correspond to the allowable/patentable claim(s) in the JPO application(s);
(4) Examination of the U.S. application has not begun;
(5) Applicant must submit a copy of all the office actions from each of the JPO application(s) containing the allowable/patentable claim(s) along with an English translation thereof and a statement that the English translation is accurate;
(6) Applicant must submit an IDS listing the documents cited by the JPO examiner in the JPO office action along with copies of documents except U.S. patents or U.S. patent application publications; and
(7) The required petition fee under 37 CFR 1.17(h).

The request to participate in the PPH program and petition comply with the above requirements. Accordingly, the above-identified application has been accorded "special" status.

The application is undergoing pre-examination processing. Once it is released for examination, the application will be forwarded to the examiner for action on the merits commensurate with this decision.

Telephone inquiries concerning this decision should be directed to Kenneth Wieder at 571-272-2986.

All other inquiries concerning the examination or status of the application should be directed to Patent Application Information Retrieval (PAIR) system.

The application is being forwarded to the examiner for action on the merits commensurate with this decision.

Kenneth A. Wieder

Kenneth Wieder
Quality Assurance Specialist
Technology Center 2600
Communications

2 0 APR 2009

United States Patent and Trademark Office

Commissioner for Patents
United States Patent and Trademark Office
P.O. Box 1450
Alexandria, VA 22313-1450
www.uspto.gov

FROMMER LAWRENCE & HAUG
745 FIFTH AVENUE- 10TH FL.
NEW YORK NY 10151

In re Application of	:	
Egan et al.	:	
Application No. 12/377,960	:	
PCT No.: PCT/IB2007/053204	:	
Int. Filing Date: 13 August 2007	:	DECISION
Priority Date: 11 August 2006	:	
Att. Docket No.: 930092-2053	:	
For: Dual Stage Process For The	:	
Rapid Formation Of Pellets	:	

The petition to revive under 37 CFR 1.137(b) filed on 18 February 2009 in the above-captioned application is hereby **GRANTED** as follows:

Petitioner states that "the entire delay in filing the required reply from the due date for the required reply until the filing of a grantable petition under 37 CFR 1.137(b) was unintentional." Said statement is accepted in satisfaction of 37 CFR 1.137(b)(3).

A review of the application file reveals that applicant has paid the petition fee. The required reply (in the form of the basic national fee) has been filed. No terminal disclaimer is required. Therefore, the request to revive the application abandoned under 35 U.S.C. 371(d) is granted as to the national stage in the United States of America.

The declaration filed on 18 February 2009 is unsigned.

This application is being forwarded to the Office of Patent Application Processing for further processing, including the preparation and mailing of a Notification of Missing Requirements (Form PCT/DO/EO/905) requiring an oath or declaration compliant with 37 CFR 1.497(a) and (b) and the surcharge under 37 CFR 1.492(h).

/George Dombroske/
George Dombroske
PCT Legal Examiner
Office of PCT Legal Administration
Tel: (571) 272-3283
Fax: (571) 273-0459

UNITED STATES PATENT AND TRADEMARK OFFICE

COMMISSIONER FOR PATENTS
UNITED STATES PATENT AND TRADEMARK OFFICE
P.O. BOX 1450
ALEXANDRIA, VA 22313-1450
www.uspto.gov

0 7 APR 2009

VOLPE AND KOENIG, P.C.
DEPT. ICC
UNITED PLAZA, SUITE 1600
30 SOUTH 17TH STREET
PHILADELPHIA, PA 19103

In re Application of OLIVERA-HERNANDEZ	:	
U.S. Application No.: 12/377,978	:	
PCT Application No.: PCT/US2006/036986	:	
Int. Filing Date: 20 September 2006	:	
Priority Date Claimed: 23 September 2005	:	DECISION
Attorney Docket No.: ITC-2-1152.01.US	:	
For: WIRELESS COMMUNICATION METHOD AND SYSTEM FOR SUPPORTING CALL CONTINUITY	:	

This is in response to applicant's "Petition for Revival of an Application for Patent Abandoned Unintentionally Under 37 CFR 1.137(b)" filed 18 February 2009.

BACKGROUND

On 20 September 2006, applicant filed international application PCT/US2006/036986, which claimed priority of an earlier United States application filed 23 September 2005. The thirty-month period for paying the basic national fee in the United States expired on 23 March 2008.

On 24 March 2008, international application PCT/US2006/036986 became abandoned as to the United States for failure to timely pay the basic national fee.

On 18 February 2009, applicant filed the present petition under 37 CFR 1.137(b).

DISCUSSION

Under 37 CFR 1.137(b), a petition requesting that an application be revived on the grounds of unintentional abandonment must be accompanied by: (1) the required reply unless previously filed, (2) the petition fee as set forth in 37 CFR 1.17(m), (3) a statement that the entire

delay in filing the required reply from the due date for the reply until the filing of a grantable petition was unintentional, and (4) a terminal disclaimer if the application was filed before 08 June 1995.

With regard to item (1), applicant has provided the required reply under 35 U.S.C. 371.

With regard to item (2), applicant has provided the required petition fee.

With regard to item (3), applicant has provided the required statement.

With regard to item (4), because the international application was filed after 08 June 1995, no terminal disclaimer is required.

CONCLUSION

For the reasons above, the petition under 37 CFR 1.137(b) is GRANTED.

The application has an International Filing Date under 35 U.S.C. 363 of 20 September 2006, and a date under 35 U.S.C. 371(c)(1), (c)(2), and (c)(4) of 18 February 2009.

This application is being forwarded to the United States Designated/Elected Office (DO/EO/US) for further processing in accordance with this decision.

BryanLin

Bryan Lin
PCT Legal Examiner
PCT Legal Office

Telephone: 571-272-3303
Facsimile: 571-273-0459

UNITED STATES PATENT AND TRADEMARK OFFICE

Commissioner for Patents
United States Patent and Trademark Office
P.O. Box 1450
Alexandria, VA 22313-1450
www.uspto.gov

04 MAR 2009

Henry M Feiereisen, LLC
Henry M Feiereisen
708 Third Avenue
Suite 1501
New York, NY 10017

In re Application of KNORR et al. Application No.: 12/377,992 PCT No.: PCT/EP07/58351 Int. Filing Date: 13 August 2007 Priority Date: 17 August 2006 Attorney Docket No.: KNORR-7 For: DEVICE CARRIAGE WITH INTEGRATED MOTOR PART	:	DECISION ON PETITION UNDER 37 CFR 1.137(b)

The petition to revive under 37 CFR 1.137(b) filed 18 February 2009 in the above-captioned application is hereby **GRANTED** as follows:

Applicant's statement that "the entire delay in filing the required reply from the due date for the reply until the filing of a grantable petition under 37 CFR 1.137(b) was unintentional" meets the requirements of 37 CFR 1.137(b)(3).

A review of the application file reveals that applicant has submitted the basic national fee and the requirements of 37 CFR 1.137(b) have been satisfied. Therefore, the request to revive the application abandoned under 35 U.S.C. 371(d) is granted as to the National stage in the United States of America.

This application is being returned to the United States Designated/Elected Office for processing in accordance with this decision.

Anthony Smith
Attorney-Advisor
Office of PCT Legal Administration
Tel: (571) 272-3298
Fax: (571) 273-0459

UNITED STATES PATENT AND TRADEMARK OFFICE

Commissioner for Patents
United States Patent and Trademark Office
P.O. Box 1450
Alexandria, VA 22313-1450
www.uspto.gov

HERBERT LECKIE MITCHELL
656 INDEPENDENCE VALLEY DRIVE
GRAND JUNSTION CO 81507

MAILED

APR 10 2009

OFFICE OF PETITIONS

In re Application of:	:	
Herbert Leckie Mitchell	:	
Application No. 12/378,008	:	DECISION ON PETITION
Filed: 02 February 2009	:	TO MAKE SPECIAL UNDER
Attorney Docket No.	:	37 CFR 1.102(c)(1)
	:	

This is a decision on the petition under 37 CFR 1.102(c)(1), filed February 10, 2009, to make the above-identified application special based on applicant's age as set forth in M.P.E.P. § 708.02, Section IV.

The petition is **GRANTED**.

A grantable petition to make an application special under 37 CFR 1.102(c)(1) and MPEP § 708.02, Section IV: Applicant's Age must be accompanied by evidence showing that at least one of the applicants is 65 years of age, or more, such as a birth certificate or a statement by applicant. No fee is required

The instant petition includes a statement by the inventor that he is over 65 years of age and a copy of his driver's license. Accordingly, the above-identified application has been accorded "special" status.

Telephone inquiries concerning this decision should be directed to Zohreh Fay at 571-272-6051 or in her absence to the undersigned at 571-272-7099.

All other inquiries concerning either the examination or status of the application should be directed to the Technology Center.

The application is being forwarded to the Technology Center Art Unit 2878 for action on the merits commensurate with this decision.

David Bucci
Petitions Examiner
Office of Petitions

UNITED STATES PATENT AND TRADEMARK OFFICE

Commissioner for Patents
United States Patent and Trademark Office
P.O. Box 1450
Alexandria, VA 22313-1450
www.uspto.gov

COPY MAILED

DEC 2 2 2009

OFFICE OF PETITIONS

RUCHIT KUMAR REGMI
GPO BOX 23890
KATHMANDU NP NEPAL

In re Application of :
Ruchit Kumar Regmi :
Application No. 12/378,026 : DECISION ON PETITION
Filed: January 6, 2009 :
Title of Invention: COMPUTER OPERATED :
BY THOUGHT AND EMOTIONS

This is a decision on the petition filed August 10, 2009 in response to the NOTICE OF INCOMPLETE NONPROVISIONAL APPLICATION - NO FILING DATE GRANTED mailed June 17, 2009. The petition is treated under CFR 1.182 to correct the filing date of the above identified application to January 6, 2009.

After the deposit of the application, a Notice of Incomplete Nonprovisional Application was mailed stating that the specification did not include at least one claim in compliance with 35 USC 112 and that the filing date of the application would be the date of receipt of a claim in compliance with 35 USC 112. The Notice required the filing of a substitute specification, a new oath or declaration and filing fees.

In response, on August 10, 2009, a substitute specification, filing fees and a newly executed oath or declaration was filed and as such, the date of receipt was accorded as the filing date.

Comes now petitioner arguing that the application is entitled to the original date of deposit, January 6, 2009, as the filing date and requests a refund of the fees paid with the instant petition.

Petitioner neither admits or denies that the filing requirements had been met on January 6, 2009 nor does he provide any evidence to prove that the application was in fact entitled to a filing date upon deposit.

Nevertheless, a review of the file record reveals that the Specification filed with the original application papers did include claims at page 2 of the specification in compliance with 35 USC 112. As such, a filing date should have been accorded and instead of a Notice of Incomplete Nonprovisional Application, a Notice to File Missing Parts should have been mailed.

STATUTE AND REGULATION

35 U.S.C. 111 provides:

(a) IN GENERAL.-
(1) WRITTEN APPLICATION. --An application for patent shall be made, or authorized

to be made, by the inventor, except as otherwise provided in this title, in writing to the Director.
(2) CONTENTS. --Such application shall include --
(A) a specification as prescribed by section 112 of this title;
(B) a drawing as prescribed by section 113 of this title; and
(C) an oath by the applicant as prescribed by section 115 of this title.
(3) FEE AND OATH. --The application must be accompanied by the fee required by law. The fee and oath may be submitted after the specification and any required drawing are submitted, within such period and under such conditions, including the payment of a surcharge, as may be prescribed by the Director.
(4) FAILURE TO SUBMIT. --Upon failure to submit the fee and oath within such prescribed period, the application shall be regarded as abandoned, unless it is shown to the satisfaction of the Director that the delay in submitting the fee and oath was unavoidable or unintentional. The filing date of an application shall be the date on which the specification and any required drawing are received in the Patent and Trademark Office.

35 U.S.C. 112 provides, in pertinent part:

The specification shall contain a written description of the invention, and of the manner and process of making and using it, in such full, clear, concise, and exact terms as to enable any person skilled in the art to which it pertains, or with which it is most nearly connected, to make and use the same, and shall set forth the best mode contemplated by the inventor of carrying out his invention.

The specification shall conclude with one or more claims particularly pointing out and distinctly claiming the subject matter which the applicant regards as his invention.

In view of the above, the petition filed August 10, 2009 is **GRANTED**. The petition fee in the amount of $400 will be refunded in due course.

This matter is being referred to the Office of Patent Application Processing for a correction of the filing date to January 6, 2009, 2008 and then to Technology Center 3715 for examination as appropriate.

Telephone inquiries concerning this matter may be directed to the undersigned Petitions Attorney at (571) 272-3212.

Patricia Faison-Ball

Patricia Faison-Ball
Senior Petitions Attorney
Office of Petitions

UNITED STATES PATENT AND TRADEMARK OFFICE

Commissioner for Patents
United States Patent and Trademark Office
P.O. Box 1450
Alexandria, VA 22313-1450
www.uspto.gov

EDWARDS ANGELL PALMER & DODGE LLP
P.O. BOX 55874
BOSTON, MA 02205

COPY MAILED
FEB 18 2010

In re Application of :
Thomas Valfridsson, et al. :
Application No. 12/378,042 : ON PETITION
Filed: February 9, 2009 :
Attorney Docket No. 65764CON(53142) :

This is a decision in response to the petition, filed December 4, 2009, to revive the above-identified application under the provisions of 37 CFR 1.137(b).

The petition is **GRANTED**.

The application became abandoned for failure to reply in a timely manner to the Notice to File Missing Parts of Nonprovisional Application mailed April 4, 2009. It is noted that a response was filed on November 2, 2009, including an executed declaration, substitute specification, basic filing fee, search fee, examination fee, additional claim fees and surcharge, along with a 5 month extension of time. On November 25, 2009, a Notice of Incomplete Reply was mailed, requiring a statement under 37 CFR 1.25(b) that the specification contained no new matter. On December 5, 2009 the present petition was filed.

The petition satisfies the requirements of 37 CFR 1.137(b) in that petitioner has supplied (1) the required reply; (2) the petition fee of $1,620; and (3) an adequate statement of unintentional delay.

The application is being referred to the Office of Patent Application Processing (OPAP) for further processing.

Telephone inquires related to this decision should be directed to the undersigned at (571) 272-3204. Telephone inquiries related to processing at OPAP should be directed to their hotline at (571) 272-4000.

Sherry D. Brinkley
Petitions Examiner
Office of Petitions

UNITED STATES PATENT AND TRADEMARK OFFICE

Commissioner for Patents
United States Patent and Trademark Office
P.O. Box 1450
Alexandria, VA 22313-1450
www.uspto.gov

BALLARD SPAHR ANDREWS & INGERSOLL, LLP
SUITE 1000
999 PEACHTREE STREET
ATLANTA GA 30309-3915

COPY MAILED

JUL 24 2009

OFFICE OF PETITIONS

In re Application of	:	
Mark Douglas Howell	:	DECISION ON PETITION
Application No. 12/378,078	:	TO WITHDRAW
Filed: February 11, 2009	:	FROM RECORD
Attorney Docket No. 03325.0002U3	:	

This is a decision on the request to withdraw as attorney of record under 37 C.F.R. § 1.36, filed June 18, 2009.

The request is **APPROVED**.

A grantable request to withdraw as attorney/agent of record must be signed by every attorney/agent seeking to withdraw or contain a clear indication that one attorney is signing on behalf of another/others. The Office will require the practitioner(s) to certify that he, she or they have: (1) given reasonable notice to the client, prior to the expiration of the reply period, which the practitioner(s) intends to withdraw from employment; (2) delivered to the client or a duly authorized representative of the client all papers and property (including funds) to which the client is entitled; and (3) notified the client of any replies that may be due and the time frame within which the client must respond, pursuant to 37 CFR 10.40 (c).

The request was signed by Sumner C. Rosenberg on behalf of all attorneys of record who are associated with Customer No. 23859.

All attorneys/agents associated with Customer Number 23859 have been withdrawn. Applicant is reminded that there is no attorney of record at this time.

All future correspondence will be directed to the assignee at the address indicated below.

Currently, there is no outstanding Office action that requires a reply.

Telephone inquires concerning this decision should be directed to Petitions Examiner Joan Olszewski at (571) 272-7751. All other inquires concerning either the examination or status of the application should be directed to the Technology Center.

/Liana Walsh/
Liana Walsh
Petitions Examiner
Office of Petitions

cc: Cytologic, Inc.
2401 Research Boulevard, Suite 205
Fort Collins CO 80526

UNITED STATES PATENT AND TRADEMARK OFFICE

Commissioner for Patents
United States Patent and Trademark Office
P.O. Box 1450
Alexandria, VA 22313-1450
www.uspto.gov

MAILED

FEB 18 2010

OFFICE OF PETITIONS

KINNEY & LANGE PA
THE KINNEY & LANGE BUILDING
312 SOUTH THIRD STREET
MINNEAPOLIS MN 55415-1002

In re Application of	:	
Zhao, et al.	:	
Application No. 12/378,093	:	ON PETITION
Filed: February 11, 2009	:	
Attorney Docket No. U66.12-0027	:	

This is a decision on the petition to withdraw the holding of abandonment under 37 CFR 1.181, filed December 15, 2009.

The petition under 37 CFR 1.181 is **GRANTED**.

The holding of abandonment is **WITHDRAWN**.

The application was held abandoned due to failure to timely reply to the Notice to File Missing parts, mailed July 16, 2009. This Office action set an extendable period for reply of two (2) months. No reply having been received, the application became abandoned on September 17, 2009. The mailing of this decision precedes the mailing of a courtesy Notice of Abandonment.

To establish nonreceipt of an Office action, a petitioner must:
1) include a statement that the Office action was not received;
2) attest to the fact that a search of the file jacket and docket

records indicates that the Office action was not received; and 3) include a copy of the docket record where the nonreceived Office action would have been entered had it been received and docketed.[1] A proper docket report consists of a "docket record where the nonreceived Office action would have been entered had it been received and docketed."[2] "For example, if a three month period for reply was set in the nonreceived Office action, a copy of the docket record showing all replies docketed for a date three months from the mail date of the nonreceived Office action must be submitted..."[3]

With the instant petition, petitioner has submitted a copy of the master docket report for each of the firm's attorney. An entry for the instant application is absent, supporting the conclusion that the July 16, 2009 Notice to File Missing Parts was not received.

In view thereof, the petition is granted.

Receipt of the 37 CFR 1.63 declaration and the $65 surcharge is acknowledged.

The application is being forwarded to the Office of Patent Application Processing for pre-examination processing, using the declaration and surcharge filed December 15, 2009.

Telephone inquiries related to this decision should be directed to the undersigned at (571)272-3207.

Cliff Congo
Petitions Attorney
Office of Petitions

---

[1] See MPEP 711.03(c)(II).

[2] MPEP 711.03(c)(II).

[3] Id.

UNITED STATES PATENT AND TRADEMARK OFFICE

UNITED STATES DEPARTMENT OF COMMERCE
United States Patent and Trademark Office
Address: COMMISSIONER FOR PATENTS
P.O. Box 1450
Alexandria, Virginia 22313-1450
www.uspto.gov

APPLICATION NO.	FILING DATE	FIRST NAMED INVENTOR	ATTORNEY DOCKET NO.	CONFIRMATION NO.
12/378,128	02/11/2009	Jeffrey D. Taft	10022/1453	8717

28164 7590 02/23/2010
ACCENTURE CHICAGO 28164
BRINKS HOFER GILSON & LIONE
P O BOX 10395
CHICAGO, IL 60610

EXAMINER
PATEL, RAMESH B

ART UNIT	PAPER NUMBER
2121	

MAIL DATE	DELIVERY MODE
02/23/2010	PAPER

Please find below and/or attached an Office communication concerning this application or proceeding.

The time period for reply, if any, is set in the attached communication.

UNITED STATES PATENT AND TRADEMARK OFFICE

Commissioner for Patents
United States Patent and Trademark Office
P.O. Box 1450
Alexandria, VA 22313-1450
www.uspto.gov

ACCENTURE CHICAGO 28164
BRINKS HOFER GILSON & LIONE
P O Box 10395
Chicago IL 60610

MAILED

FEB 22 2010

Technology Center 2100

In re Application of	:	
TAFT, Jeffrey	:	DECISION ON PETITION
Application No. 12/378,128	:	TO MAKE SPECIAL UNDER
Filed: February 11, 2009	:	THE GREEN TECHNOLOGY
Attorney Docket No.	:	PILOT PROGRAM
10022/1453		

This is a decision on the petition under 37 CFR 1.102, filed January 29, 2010, to make the above-identified application special under the pilot program for applications pertaining to Green Technologies as set forth 74 Federal Register Notice 64666 (December 8, 2009).

The petition is **GRANTED**.

A grantable petition to make an application special under 37 CFR 1.102 and the pilot program as set forth in 74 FR 64666 must be directed to a nonprovisional application filed under 35 USC 111(a) or be a national stage entry under 35 USC 371, exclusive of any reissue applications and be filed prior to the date of the notice, December 8, 2009.

In order to qualify for special status, the following requirements must be met. 1) The application must be classified in one of the eligible US classifications listed in section VI of the notice. 2) The application must have no more than 3 independent claims and no more than 20 total claims. 3) The application must not contain any multiple dependent claims. 4) The petition must state the basis for seeking special status, i.e., the claimed invention either: A) materially enhances the quality of the environment or B) materially contributes to: i) the discovery or development of renewable energy resources, ii) the more efficient utilization and conservation of energy resources, or iii) greenhouse gas emission reduction. 5) If the disclosure is not clear on its face that the claimed invention materially contributes under category (A) or (B), the petition must be accompanied by a statement by the applicant, assignee, or an attorney/agent registered to practice before the Office explaining how the materiality standard is met. 6) A statement that applicant will agree to make an election without traverse in a telephonic interview if a restriction requirement is made by the examiner. 7) The petition to make special must be filed electronically. 8) The petition must be filed at least one day prior to the date that a first Office

Action appears in the Patent Application Information Retrieval (PAIR) system. 9) The petition must be accompanied by a request for early publication in compliance with 37 CFR 1.219 and include the publication fee as set forth in 37 CFR 1.18(d).

The requirement for a fee for consideration of the petition to make special for applications pertaining to Green Technologies has been waived.

The instant petition complies with items 1 – 9 above. Accordingly, the above-identified application has been accorded "special" status.

Telephone inquires concerning this decision should be directed to Eddie C. Lee at 571-272-1732.

The application is being forwarded to the Technology Center Art Unit 2121 for action on the merits commensurate with this decision.

/Eddie C. Lee/

Eddie C. Lee
Quality Assurance Specialist
Technology Center 2100

UNITED STATES PATENT AND TRADEMARK OFFICE

Commissioner for Patents
United States Patent and Trademark Office
P.O. Box 1450
Alexandria, VA 22313-1450
www.uspto.gov

TOWNSEND AND TOWNSEND AND CREW, LLP
TWO EMBARCADERO CENTER
EIGHTH FLOOR
SAN FRANCISCO, CA 94111-3834

COPY MAILED

JUN 2 5 2009

OFFICE OF PETITIONS

In re Application of	:	
William W.Y. Chu	:	DECISION ON PETITION
Application No. 12/378,197	:	TO WITHDRAW
Filed: February 11, 2009	:	FROM RECORD
Attorney Docket No. ACQI-010/09US	:	
310578-2048		

This is a decision on the Request to Withdraw as attorney or agent of record under 37 C.F.R. § 1.36(b), filed March 9, 2009.

The request is **NOT APPROVED** because it is moot.

A review of the file record indicates that on May 4, 2009 the power of attorney to Townsend and Townsend and Crew, LLP was revoked by the assignee of the patent application. Accordingly, the request to withdraw under 37 C.F.R. § 1.36(b) is moot.

All future communications from the Office will be directed to the below-listed address until otherwise notified by applicant.

Telephone inquires concerning this decision should be directed to the undersigned at 571-272- 7751. All other inquires concerning either the examination or status of the application should be directed to the Technology Center.

Joan Olszewski
Petitions Examiner
Office of Petitions

cc: Cooley Godward Kronish LLP
ATTN: Patent Group
Suite 1100
777 – 6th Street, NW
Washington DC 20001

UNITED STATES PATENT AND TRADEMARK OFFICE

Commissioner for Patents
United States Patent and Trademark Office
P.O. Box 1450
Alexandria, VA 22313-1450
www.uspto.gov

WILEY HORTON
215 SOUTH MONROE STREET
2ND FLOOR
TALLAHASSEE FL 32301

MAILED

MAR 17 2010

OFFICE OF PETITIONS

In re Application of :
Oliver STEINBOCK et al. :
Application No. 12/378,211 : ON PETITION
Filed: February 12, 2009 :
Attorney Docket No. 19692-19196 :

This is a decision on the petition under 37 CFR 1.137(b), filed December 22, 2009, to revive the above-identified application.

The petition is **GRANTED**.

The above-identified application became abandoned for failure to file a proper reply in a timely manner to the Notice to File Missing Parts of Nonprovisional Application mailed March 06, 2009, which set a shortened statutory period for reply of two (2) months. A reply was due on or before May 06, 2009. Accordingly, the above-identified application became abandoned on May 07, 2009.

The petition satisfies the conditions for revival pursuant to the provisions of 37 CFR 1.137(b) in that (1) the reply in the form of the required fees.and oath or declaration; (2) the petition fee of $810; and (3) the required statement of unintentional delay have been received. Accordingly, the reply to the Notice to File Missing Parts mailed March 06, 2009 is accepted as having been unintentionally delayed.

It is not apparent whether the person signing the statement of unintentional delay was in a position to have firsthand knowledge of the facts and circumstances of the delay at issue. Nevertheless, such statement is being treated as having been made as the result of a reasonable inquiry into the facts and circumstances of such delay. See 37 CFR 10.18(b) and Changes to Patent Practice and Procedure; Final rule Notice, 62 Fed. Reg. 53131, 53178 (October 10, 1997), 1203 Off. Gaz. Pat. Office 63, 103 (October 21, 1997). In the event that such an inquiry has not been made, petitioner must make such an inquiry. If such inquiry results in the discovery that it is not correct that the entire delay in filing the required reply from the due date for the reply until the filing of a grantable petition pursuant of 37 CFR 1.137(b) was unintentional, petitioner must notify the Office.

The file does not indicate a change of address has been submitted, although the address given on the petition differs from the address of record. If appropriate, a change of address should be filed in accordance with MPEP 601.03. A courtesy copy of this decision is being mailed to the address given on the petition; however, the Office will mail all future correspondence solely to the address of record.

Further correspondence with respect to this matter should be addressed as follows:

By Mail: Mail Stop PETITION
Commissioner for Patents
P. O. Box 1450
Alexandria, VA 22313-1450

By hand: U. S. Patent and Trademark Office
Customer Service Window, Mail Stop Petitions
Randolph Building
401 Dulany Street
Alexandria, VA 22314

The centralized facsimile number is **(571) 273-8300.**

Telephone inquiries concerning this decision should be directed to Tammara Peyton at (571) 272-6052 or in his absence to the undersigned at (571) 272-7099.

The application is being referred to the Office of Patent Application Processing.

David A. Bucci
Petitions Examiner
Office of Petitions

Cc:
JOHN HORTION
PENNINGTON, MOORE, WILKINSON, BELL & DUNBAR, P.A.
P.O. DRAWER 10095
TALLAHASSEE, FL 32302-2095

UNITED STATES PATENT AND TRADEMARK OFFICE

Commissioner for Patents
United States Patent and Trademark Office
P.O. Box 1450
Alexandria, VA 22313-1450
www.uspto.gov

NIELDS, LEMACK & FRAME, LLC
176 E. MAIN STREET, SUITE #5
WESTBOROUGH, MA 01581

COPY MAILED

MAR 1 1 2009

OFFICE OF PETITIONS

In re Application of	:	
A.K. Gunnar ABERG, et al	:	
Application No. 12/378,231	:	DECISION ON PETITION
Filed: February 12, 2009	:	TO MAKE SPECIAL UNDER
Attorney Docket No. 559P017CCONT.	:	37 CFR 1.102(c)(1)
	:	

This is a decision on the petition under 37 CFR 1.102(c)(1), filed February 12, 2009, to make the above-identified application special based on applicant's age as set forth in M.P.E.P. § 708.02, Section IV.

The petition is **GRANTED**.

A grantable petition to make an application special under 37 CFR 1.102(c)(1) and MPEP § 708.02, Section IV: Applicant's Age must be accompanied by evidence showing that at least one of the applicants is 65 years of age, or more, such as a birth certificate or a statement by applicant. No fee is required

The instant petition includes a copy of Applicant A.K. Gunner Aberg's drivers license. Accordingly, the above-identified application has been accorded "special" status.

Telephone inquiries concerning this decision should be directed to the undersigned at 571-272-6735.

All other inquiries concerning either the examination or status of the application should be directed to the Technology Center.

The application is being forwarded to Technology Center Art Unit 1625 for action on the merits commensurate with this decision.

Diane Goodwyn
Petitions Examiner
Office of Petitions

UNITED STATES PATENT AND TRADEMARK OFFICE

Commissioner for Patents
United States Patent and Trademark Office
P.O. Box 1450
Alexandria, VA 22313-1450
www.uspto.gov

In re Application of
Sijo Bak

Application No. 12378319

Filed: February 17,2009

Attorney Docket No.

:
:
:DECISION ON PETITION TO MAKE SPECIAL
:UNDER 37 CFR 1.102(c)(1)
:

This is a decision on the electronic petition under 37 CFR 1.102 (c)(1), filed 30-DEC-2009 to make the above-identified application special based on applicant's age as set forth in MPEP § 708.02, Section IV.

The petition is **GRANTED**.

A grantable petition to make an application special under 37 CFR 1.102(c)(1), MPEP § 708.02, Section IV: Applicant's Age must include a statement by applicant or a registered practitioner having evidence that applicant is at least 65 years of age. No fee is required.

Accordingly, the above-identified application has been accorded "special" status and will be taken up for action by the examiner upon the completion of all pre-examination processing.

Telephone inquiries concerning this electronic decision should be directed to the Electronic Business Center at 866-217-9197.

All other inquiries concerning either the examination or status of the application should be directed to the Technology Center.

UNITED STATES PATENT AND TRADEMARK OFFICE

UNITED STATES DEPARTMENT OF COMMERCE
United States Patent and Trademark Office
Address: COMMISSIONER FOR PATENTS
P.O. Box 1450
Alexandria, Virginia 22313-1450
www.uspto.gov

APPLICATION NO.	FILING DATE	FIRST NAMED INVENTOR	ATTORNEY DOCKET NO.	CONFIRMATION NO.
12/378,319	02/17/2009	Sijo Bak		6832

88835 7590 02/24/2010
SIJO BAK
501-1420 2ND AVE EAST
VANCOUVER, BC V5N 5L9
CANADA

EXAMINER

ART UNIT	PAPER NUMBER
2839	

MAIL DATE	DELIVERY MODE
02/24/2010	PAPER

Please find below and/or attached an Office communication concerning this application or proceeding.

The time period for reply, if any, is set in the attached communication.

UNITED STATES PATENT AND TRADEMARK OFFICE

Commissioner for Patents
United States Patent and Trademark Office
P.O. Box 1450
Alexandria, VA 22313-1450
www.uspto.gov

SIJO BAK
501-1420 2ND AVE EAST
VANCOUVER BC V5N 5L9 CA CANADA

In re Application of	:	
Sijó BAK	:	DECISION ON PETITION
Application No. 12/378,319	:	TO MAKE SPECIAL UNDER
Filed: 17 February 2009	:	THE GREEN TECHNOLOGY
Attorney Docket No. N/A	:	PILOT PROGRAM

This is a decision on the petition under 37 CFR 1.102, filed 30 December 2009, to make the above-identified application special under the pilot program for applications pertaining to Green Technologies as set forth 74 Federal Register Notice 64666 (December 8, 2009).

The petition is **DISMISSED**.

If reconsideration of this decision is desired, a petition for reconsideration must be filed within ONE (1) MONTH OR THIRTY (30) DAYS from the mail date of this decision, whichever is longer. No extension of this time limit can be granted under 37 CFR 1.136(a) or (b). The petition for reconsideration should include an exhaustive attempt to provide the lacking item(s) noted below, since, after a decision on the petition for reconsideration, no further reconsideration or review of the matter will be undertaken by the Director.

A grantable petition to make an application special under 37 CFR 1.102 and the pilot program as set forth in 74 FR 64666 must be directed to a nonprovisional application filed under 35 USC 111(a) or be a national stage entry under 35 USC 371, exclusive of any reissue applications and be filed prior to the date of the notice, December 8, 2009.

In order to qualify for special status, the following requirements must be met. 1) The application must be classified in one of the eligible US classifications listed in section VI of the notice. 2) The application must have no more than 3 independent claims and no more than 20 total claims. 3) The application must not contain any multiple dependent claims. 4) The petition must state the basis for seeking special status, i.e., the claimed invention either: A) materially enhances the quality of the environment or B) materially contributes to: i) the discovery or development of renewable energy resources, ii) the more efficient utilization and conservation of energy resources, or iii) greenhouse gas emission reduction. 5) If the disclosure is not clear on its face that the claimed invention materially contributes under category (A) or (B), the petition must be accompanied by a statement by the applicant, assignee, or an attorney/agent registered to practice before the Office explaining how the materiality standard is met. 6) A statement that applicant will agree to make an election without traverse in a telephonic interview if a restriction

requirement is made by the examiner. 7) The petition to make special must be filed electronically. 8) The petition must be filed at least one day prior to the date that a first Office Action appears in the Patent Application Information Retrieval (PAIR) system. 9) The petition must be accompanied by a request for early publication in compliance with 37 CFR 1.219 and include the publication fee as set forth in 37 CFR 1.18(d).

The requirement for a fee for consideration of the petition to make special for applications pertaining to Green Technologies has been waived.

The petition lacks items 1 and 4 above.

In regard to item 1, petitioner should note that this application has been classified in an area (USPC 290/001.00R) that is not one of the eligible US classifications listed in section VI of the notice. Therefore, this application is not eligible for the Pilot Program. The classification limitations are purposefully made to be narrow for the Pilot Program; however, these may be expanded based upon the success of the Pilot Program. Petitioner may file a preliminary amendment that would cause this application to be classified elsewhere. However, while petitioner may suggest a classification (see, e.g., MPEP 708.02(a)(VII)(C)), the application will be assigned to the most appropriate classification based upon current U.S. classification guidelines. Furthermore, a petition for the Pilot Program should not be filed until and unless all of the requirements set forth in the Notice are met; i.e., a petition should not be filed for an application that is currently classified outside the eligible classifications set forth in the Notice.

In regard to item 4, petitioner should note that the instant petition fails to state the basis for the special status (i.e., whether the instant invention (1) materially enhances the quality of the environment or materially contributes to (2) development of renewable energy resources or energy conservation, or (3) greenhouse gas reduction) as required by sections II and III of the notice.

Any reconsideration of this decision should be submitted through the USPTO electronic filing system, EFS-Web, and selecting the document description of "Petition for Green Tech Pilot" on the EFS-Web screen.

Telephone inquires concerning this decision should be directed to Lee W. Young at 571-272-4549.

The application is being forwarded to the Technology Center Art Unit 2839 for action on the merits commensurate with this decision.

Lee W. Young
Quality Assurance Specialist
Technology Center 2800

OIPE IAP13
MAY 0 8 2009
PATENT & TRADEMARK OFFICE

UNITED STATES PATENT AND TRADEMARK OFFICE

Commissioner for Patents
United States Patent and Trademark Office
P.O. Box 1450
Alexandria, VA 22313-1450
www.uspto.gov

LEE & HAYES, PLLC
c/o PORTFOLIOIP
P.O. BOX 52050
MINNEAPOLIS, MN 55402

COPY MAILED

OCT 2 5 2007

OFFICE OF PETITIONS

In re Application of:	:	
Hudait et al.	:	
Application No. 11/527785	:	DECISION GRANTING
Filing or 371(c) Date: 09/27/2006	:	PETITION UNDER
Title of Invention:	:	37 CFR 1.47(a)
BUFFER LAYERS FOR DEVICE	:	
ISOLATION OF DEVICES GROWN	:	
ON SILICON	:	

This Decision is in response to the "Request for Reconsideration of Petition for Filing Patent Application by Other than all Inventor's Under 37 C.F.R. 1.47(A)," filed August 30, 2007. The petition is properly treated as a petition to allow the other inventor(s) to proceed with the application on behalf of himself or herself and the nonsigning inventor(s).

The petition is **granted**.

The above-identified application and papers have been reviewed and found in compliance with 37 CFR 1.47(a). This application is hereby accorded Rule 1.47(a) status.

Petitioner has shown that the non-signing inventor, Mohamed A. Shaheen, refuses to join in the application.

As provided in Rule 1.47(a), this Office will forward notice of this application's filing to the non-signing inventor at the addresses given in the Petition. Notice of the filing of this application will also be published in the Official Gazette.

The application file is being referred to the Office of Initial Patent Examination for continued processing.

Telephone inquiries related to this decision may be directed to the undersigned at (571) 272-3232.

Derek L. Woods
Attorney
Office of Petitions

O I P E IAP13
MAY 0 8 2009
PATENT & TRADEMARK OFFICE

UNITED STATES PATENT AND TRADEMARK OFFICE

Commissioner for Patents
United States Patent and Trademark Office
P.O. Box 1450
Alexandria, VA 22313-1450
www.uspto.gov

MR. MOHAMAD A. SHAHEEN
15060 NW FAWNLILY DRIVE
PORTLAND, OR 97229

COPY MAILED

OCT 2 5 2007

OFFICE OF PETITIONS

In re Application of:	:	
Hudait et al.	:	
Application No. 11/527785	:	LETTER
Filing or 371(c) Date: 09/27/2006	:	
Title of Invention:	:	
BUFFER LAYERS FOR DEVICE	:	
ISOLATION OF DEVICES GROWN	:	
ON SILICON	:	

Dear Mr.Shaheen:

You are named as a joint inventor in the above-identified United States patent application filed under the provisions of 35 U.S.C. 116 (United States Code) and 37 CFR 1.47(a), Rules of Practice in Patent Cases. Should a patent be granted on the application you will be designated therein as a joint inventor.

As a named inventor you are entitled to inspect any paper in the file wrapper of the application, order copies of all or any part thereof (at a prepaid cost per 37 CFR 1.19) or make your position of record in the application. Alternatively, you may arrange to do any of the preceding through a registered patent attorney or agent presenting written authorization from you. If you care to join the application, counsel of record (see below) would presumably assist you. Joining in the application would entail the filing of an appropriate oath or declaration by you pursuant to 37 CFR 1.63.

Telephone inquiries regarding this communication should be directed to the undersigned at (571) 272-3232. Requests for information regarding your application should be directed to the File Information Unit at (703) 308-2733. Information regarding how to pay for and order a copy of the application, or a specific paper in the application, should be directed to Certification Division at (703) 308-9726 or 1-800-972-6382 (outside the Washington D.C. area).

Derek L. Woods
Attorney
Office of Petitions

CC: LEE & HAYES, PLLC
c/o PORTFOLIOIP
P.O. BOX 52050
MINNEAPOLIS, MN 55402

UNITED STATES PATENT AND TRADEMARK OFFICE

UNITED STATES DEPARTMENT OF COMMERCE
United States Patent and Trademark Office
Address: COMMISSIONER FOR PATENTS
P.O. Box 1450
Alexandria, Virginia 22313-1450
www.uspto.gov

APPLICATION NO.	FILING DATE	FIRST NAMED INVENTOR	ATTORNEY DOCKET NO.	CONFIRMATION NO.
12/378,414	02/13/2009	Stephen D. Sawczak	070201-4	1816

26285 7590 04/15/2010
K&L GATES LLP
210 SIXTH AVENUE
PITTSBURGH, PA 15222-2613

EXAMINER

ART UNIT	PAPER NUMBER
2113	

MAIL DATE	DELIVERY MODE
04/15/2010	PAPER

Please find below and/or attached an Office communication concerning this application or proceeding.

The time period for reply, if any, is set in the attached communication.

UNITED STATES PATENT AND TRADEMARK OFFICE

COMMISSIONER FOR PATENTS
UNITED STATES PATENT AND TRADEMARK OFFICE
P.O. BOX 1450
ALEXANDRIA, VA 22313-1450
www.uspto.gov

K & L GATES LLP
210 SIXTH AVENUE
PITTSBURGH, PA 15222-2613

MAILED

APR 15 2010

TECHNOLOGY CENTER 2100

In re Application of: SAWCZAK, et al.
Application No. 12/378,414

Filed: February 13, 2009

For: **SYSTEMS AND METHODS FOR COMPUTER EQUIPMENT MANAGEMENT**

DECISION ON PETITION UNDER 37 C.F.R. § 1.84(a)(2) TO ACCEPT COLOR DRAWINGS

This is a decision on the petition under 37 C.F.R. § 1.84(a)(2), filed February 13, 2009, requesting acceptance of color drawings.

The petition requests that the color drawings, of the instant application, be accepted in lieu of black and white drawings.

A grantable petition under 37 C.F.R. § 1.84(a)(2) must be accompanied by a fee set forth under 37 C.F.R. § 1.17(h), three (3) sets of the color drawings in question, a black and white photocopy of said drawings, and the specification must contain, or be amended to contain, the following language as the first paragraph in that portion of the specification relating to the brief description of the drawings:

"The patent or application file contains at least one drawing executed in color. Copies of this patent or patent application publication *with color drawing(s) will be provided by the Patent and Trademark Office upon request and payment of the necessary fee."*

The petition was filed with the required fee and 3 (three) sets of color drawings. The specification at page 1, para. [0002], contains the notification described above.

The petition is **GRANTED**.

Brian L. Johnson, (571) 272-3595
Quality Assurance Specialist, Technology Center 2100
Computer Architecture, Software and Information Security

UNITED STATES PATENT AND TRADEMARK OFFICE

UNITED STATES DEPARTMENT OF COMMERCE
United States Patent and Trademark Office
Address: COMMISSIONER FOR PATENTS
P.O. Box 1450
Alexandria, Virginia 22313-1450
www.uspto.gov

BASF Performance Products LLC
Patent Department
540 White Plains Road
P.O. Box 2005
Tarrytown, NY 10591

Mail Date: 04/20/2010

Applicant	: Michael Heneghan	: DECISION ON REQUEST FOR
Patent Number	: 7655380	: RECALCULATION of PATENT
Issue Date	: 02/02/2010	: TERM ADJUSTMENT IN VIEW
Appliction No	: 12/378,447	: OF WYETH AND NOTICE OF INTENT TO
Filed	: 02/13/2009	: ISSUE CERTIFICATE OF CORRECTION
		:

The Request for Recalculation is **GRANTED** to the extent indicated.

The patent term adjustment has been determined to be **0** days. The USPTO will *sua sponte* issue a certificate of correction reflecting the amount of PTA days determined by the recalculation.

Prior to the issuance of the certificate of correction, the USPTO will afford patentee an opportunity to be heard and request reconsideration. Accordingly, patentee has **one month or thirty (30) days**, whichever is longer, to file a request for reconsideration of this patent term adjustment calculation. See 35 U.S.C. 154(b)(3)(B)(ii) and 37 CFR 1.322(a)(4). No extensions of time will be granted under 37 CFR 1.136.

Patentee should use document code PET.OP if electronically filing a request for reconsideration of this patent term adjustment calculation. The patentee must also include the information required by 37 CFR 1.705(b)(2) and the fee required by 37 CFR 1.18(e). If patentee does not file a timely request for reconsideration of this patent term adjustment calculation including the information required by 37 CFR 1.705(b)(2) and the fee required by 37 CFR 1.18(e), the USPTO will issue a certificate of correction reflecting the PTA determination noted above.

Patentee should be aware that in order to preserve the right to review in the United States District Court for the District of Columbia of the USPTO patent term adjustment determination, patentee must ensure that he or she also take the steps required under 35 U.S.C. 154(b)(4)(A) in a timely manner. Nothing in the request for recalculation should be construed as providing an alternative time frame for commencing a civil action under 35 U.S.C. 154(b)(4)(A).

Any questions concerning this decision should be directed to the Office of Patent Legal Administration at 571-272-7702.

UNITED STATES PATENT AND TRADEMARK OFFICE

Commissioner for Patents
United States Patent and Trademark Office
P.O. Box 1450
Alexandria, VA 22313-1450
www.uspto.gov

DONALD N. HALGREN
35 CENTRAL STREET
MANCHESTER, MA 01944

COPY MAILED
MAY 01 2009
OFFICE OF PETITIONS

In re Application of	:	
Robert J. CROWLEY, et al.	:	
Application No. 12/378,452	:	DECISION ON PETITION TO MAKE
Filed: February 13, 2009	:	SPECIAL UNDER 37 CFR 1.102(c)(1)
Attorney Docket No. **ANT-GOOD5**	:	
	:	

This is a decision on the petition under 37 CFR 1.102(c)(1), filed April 10, 2009, to make the above-identified application special based on applicant's age as set forth in M.P.E.P. § 708.02, Section IV.

The petition is **GRANTED**.

A grantable petition to make an application special under 37 CFR 1.102(c)(1) and MPEP § 708.02, Section IV: Applicant's Age must be accompanied by evidence showing that at least one of the applicants is 65 years of age, or more, such as a birth certificate or a statement by applicant. No fee is required

The instant petition includes the statement of inventor Donald N. Halgren attesting to his age. Accordingly, the above-identified application has been accorded "special" status.

Inquiries concerning either the examination or status of the application should be directed to the technology center at 571-272-2600.

Telephone inquiries concerning this decision should be directed to the undersigned at 571-272-7253.

The application is being forwarded to the Technology Center AU 2618 for action on the merits commensurate with this decision.

/Monica A. Graves/
Petitions Examiner, Office of Petitions

UNITED STATES PATENT AND TRADEMARK OFFICE

UNITED STATES DEPARTMENT OF COMMERCE
United States Patent and Trademark Office
Address: COMMISSIONER FOR PATENTS
P.O. Box 1450
Alexandria, Virginia 22313-1450
www.uspto.gov

APPLICATION NO.	FILING DATE	FIRST NAMED INVENTOR	ATTORNEY DOCKET NO.	CONFIRMATION NO.
12/378,462	02/13/2009	Stephen D. Sawczak	070201-1	9025

26285 7590 05/05/2010
K&L GATES LLP
210 SIXTH AVENUE
PITTSBURGH, PA 15222-2613

EXAMINER
VU, KIEU D

ART UNIT	PAPER NUMBER
2173	

MAIL DATE	DELIVERY MODE
05/05/2010	PAPER

Please find below and/or attached an Office communication concerning this application or proceeding.

The time period for reply, if any, is set in the attached communication.

UNITED STATES PATENT AND TRADEMARK OFFICE

Commissioner for Patents
United States Patent and Trademark Office
P.O. Box 1450
Alexandria, VA 22313-1450
www.uspto.gov

K&L GATES LLP
535 Smithfield Street
Pittsburgh PA 15222

In re Application of:
SAWCZAK, Stephen et al.
Application No. 12/378,462
Filed: February 13, 2009
For: SYSTEMS AND METHODS FOR COMPUTER EQUIPMENT MANAGEMENT

DECISION ON PETITION UNDER 37 C.F.R. § 1.84(a)(2) TO ACCEPT COLOR DRAWINGS

This is a decision on the petition under 37 C.F.R. § 1.84(a)(2), filed on February 13, 2009, requesting acceptance of color drawings.

The petition requests that the color drawings of Figures 3-7, 9-11 and 13 be accepted in lieu of black and white drawings.

A grantable petition under 37 C.F.R. § 1.84(a)(2) must be accompanied by a fee set forth under 37 C.F.R. § 1.17(h), 3 (three) sets of the color drawings in question, and the specification must contain, or be amended to contain, the following language as the first paragraph in that portion of the specification relating to the brief description of the drawings:

"the file of this patent contains at least one drawing executed in color. Copies of this patent with color drawing(s) will be provided by the Patent and Trademark Office upon request and payment of the necessary fee."

The petition was filed with the required fee and was filed with three (3) sets of color drawings of Figures 3-7, 9-11 and 13. Paragraph [0002] of the specification contains the required notification described above.

Accordingly, the petition is **GRANTED**.

Any inquiry regarding this decision should be directed to Eddie C. Lee at (571) 272-1732.

/Eddie C. Lee/

Eddie C. Lee
Quality Assurance Specialist, TC 2100
(571) 272-1732

UNITED STATES PATENT AND TRADEMARK OFFICE

Commissioner for Patents
United States Patent and Trademark Office
P.O. Box 1450
Alexandria, VA 22313-1450
www.uspto.gov

WILLIAM RYAN
LAW OFFICES OF WILLIAM RYAN
1577-D NEW GARDEN ROAD
SUITE 300
GREENSBORO NC 27410

MAILED

JUL 02 2010

OFFICE OF PETITIONS

In re Application of	:	
William Ryan	:	
Application No. 12/378,507	:	ON PETITION
Filed: February17, 2009	:	
Attorney Docket No. Ryan 6	:	

This is a decision on the petition under 37 CFR 1.102(c)(1), filed June 1, 2010, to make the above-identified application special based on applicant's age as set forth in M.P.E.P. § 708.02, Section IV.

The petition is **GRANTED**.

A grantable petition to make an application special under 37 CFR 1.102(c)(1) and MPEP § 708.02, Section IV: Applicant's Age must be accompanied by evidence showing that at least one of the applicants is 65 years of age, or more, such as a birth certificate or a statement by applicant. No fee is required.

The instant petition includes a statement by the applicant's attorney that applicant is 65 years of age, and a Declaration from applicant that applicant is 65 years of age. Accordingly, the above-identified application has been accorded "special" status.

Telephone inquiries concerning this decision should be directed to the undersigned at 571-272-7751. All other inquiries concerning either the examination or status of the application should be directed to the Technology Center.

This matter is being referred to the Technology Center Art Unit 2614 for action on the merits commensurate with this decision.

Joan Olszewski

Joan Olszewski
Petitions Examiner
Office of Petitions

UNITED STATES PATENT AND TRADEMARK OFFICE

Commissioner for Patents
United States Patent and Trademark Office
P.O. Box 1450
Alexandria, VA 22313-1450
www.uspto.gov

MAILED

MAY 07 2010

OFFICE OF PETITIONS

HAMILTON, BROOK, SMITH & REYNOLDS, P.C.
530 VIRGINIA ROAD
P.O. BOX 9133
CONCORD, MA 01742-9133

Applicant: Jaladanki, et al.
Appl. No.: 12/378,512
Filing Date: February 17, 2009
Title: METHODS AND APPARATUS FOR EXTENDED ERROR REPORTING IN NETWORK MANAGEMENT
Attorney Docket No.: 2376.2414-000
Pub. No.: US 2009/0204697 A1
Pub. Date: August 13, 2009

This is a decision on the request for a corrected patent application publication under 37 CFR 1.221(b), received on September 4, 2009, for the above-identified application.

The request is DISMISSED.

Applicant requests that the application be republished because the patent application publication contains material errors on the front page of the publication wherein the continuation data listed under "Related U.S. Application Data" should be removed.

37 CFR 1.221 (b) is applicable "only when the Office makes a material mistake which is apparent from Office records.... Any request for a corrected publication or revised patent application publication other than provided as provided in paragraph (a) of this section must be filed within two months from the date of the patent application publication. This period is not extendable." A material mistake must affect the public's ability to appreciate the technical disclosure of the patent application publication, to determine the scope of the patent application publication, or to determine the scope of the provisional rights that an applicant may seek to enforce upon issuance of a patent. [1]

The error on the front page of the publication wherein the "Related U.S. Application Data" should not have been listed, because there is no domestic priority in the application claimed by applicant, may be Office error, but is not a material Office error under 37 CFR 1.221. The listing of the continuation data does not affect the understanding of the application. The continuation data is not listed on the first page of the specification, thus one can read and understand the content of the application. The misprint does not affect the understanding of the application. The

[1] Changes to Implement Eighteen-Month Publication of Patent Applications, 65 FR 57023, 57038 (Sept. 20, 2000), 1239, Off. Gaz. Pat. Office Notices 63, 75 (Oct. 10, 2000) (final rule).

mistake does not affect the public's ability to appreciate the technical disclosure of the patent application publication, or determine the scope of the patent application publication or determine the scope of the provisional rights that an applicant may seek to enforce upon issuance of a patent. The error also does not affect the use of the patent application publication as a prior art reference, because the foreign priority date is not useable as a reference date.

The applicant is advised that a "request for republication of an application previously published" may be filed under 37 CFR 1.221(a). Such a request for republication "must include a copy of the application compliance with the Office's electronic filing system requirements and be accompanied by the publication fee set forth in § 1.18(d) and the processing fee set forth in § 1.17(i)." If the request for republication does not comply with the electronic filing system requirements, the republication will not take place and the publication fee set forth in § 1.18(d) will be refunded. The processing fee will be retained.

A guide for filing a request for a Pre-Grant Publication, such as a request for republication, may be found on the link below:

http://www.uspto.gov/ebc/portal/tutorials.htm

Any request for republication under 37 CFR 1.221(a), must be submitted via the EFS system, as a "Pre-Grant Publication" and questions or request for reconsideration of the decision, should be addressed as follows:

By mail to: Mail Stop PGPUB
Commissioner for Patents
P.O. Box 1450
Alexandria, Va. 22313-1450

Inquiries relating to this matter may be directed to Mark Polutta at (571) 272-7709.

Mark Polutta
Senior Legal Advisor
Office of Patent Legal Administration
Office of the Deputy Commissioner
for Patent Examination Policy

UNITED STATES PATENT AND TRADEMARK OFFICE

Commissioner for Patents
United States Patent and Trademark Office
P.O. Box 1450
Alexandria, VA 22313-1450
www.uspto.gov

Janet Schofield
1847 Terrence Drive
Stafford, TX 77477

COPY MAILED

APR 17 2009

OFFICE OF PETITIONS

In re Application of

John Paul Schofield et al.
Application No. 12/378,557
Filed: February 17, 2009
Attorney Docket No.

DECISION ON PETITION
TO MAKE SPECIAL UNDER
37 CFR 1.102(c)(1)

This is a decision on the petition under 37 CFR 1.102(c)(1), filed February 8, 2009, to make the above-identified application special based on applicant's age as set forth in M.P.E.P. § 708.02, Section IV.

The petition is **GRANTED**.

A grantable petition to make an application special under 37 CFR 1.102(c)(1) and MPEP § 708.02, Section IV: Applicant's Age must be accompanied by evidence showing that at least one of the applicants is 65 years of age, or more, such as a birth certificate or a statement by applicant. No fee is required

The instant petition includes a statement by the applicant John Paul Schofield that he is age 65 years or older. Accordingly, the above-identified application has been accorded "special" status.

Telephone inquiries concerning this decision should be directed to Kimberly Inabinet at 571-272-4618.

All other inquiries concerning the status of the application should be directed to the Office of Patent Examination Processing at 571-272-4000.

Upon completion of the pre-examination processing by the Office of Patent Application Processing, this application will be referred to Technology Center Art Unit 3633 for action on the merits commensurate with this decision.

Kimberly Inabinet
Petitions Examiner
Office of Petitions

UNITED STATES PATENT AND TRADEMARK OFFICE

Commissioner for Patents
United States Patent and Trademark Office
P.O. Box 1450
Alexandria, VA 22313-1450
www.uspto.gov

COPY MAILED

AUG 14 2009

OFFICE OF PETITIONS

Kenneth Watov, Esq.
WATOV & KIPNES, P.C.
P.O.Box 247
Princeton Junction NJ 08550

In re Application of	:	
Robert Anthony Mostello	:	
Application No. 12/378,756	:	DECISION ON PETITION
Filed: February 19, 2009	:	TO MAKE SPECIAL UNDER
Attorney Docket No. 13641001DIV1	:	37 CFR 1.102(c)(1)
	:	

This is a decision on the petition under 37 CFR 1.102(c)(1), filed June 23, 2009, to make the above-identified application special based on applicant's age as set forth in M.P.E.P. § 708.02, Section IV.

The petition is **GRANTED**.

A grantable petition to make an application special under 37 CFR 1.102(c)(1) and MPEP § 708.02, Section IV: Applicant's Age must be accompanied by evidence showing that at least one of the applicants is 65 years of age, or more, such as a birth certificate or a statement by applicant. No fee is required

The instant petition includes a statement from the attorney of record certifying that he is in possession of evidence showing that the inventor is 65 years of age or more. Accordingly, the above-identified application has been accorded "special" status.

Telephone inquiries concerning this decision should be directed to Terri Williams at 571-272-2991.

All other inquiries concerning either the examination or status of the application should be directed to the Technology Center.

The application is being forwarded to the Technology Center Art Unit 3744 for action on the merits commensurate with this decision.

Terri Williams

Terri Williams
Petitions Examiner
Office of Petitions

UNITED STATES PATENT AND TRADEMARK OFFICE

UNITED STATES DEPARTMENT OF COMMERCE
United States Patent and Trademark Office
Address: COMMISSIONER FOR PATENTS
P.O. Box 1450
Alexandria, Virginia 22313-1450
www.uspto.gov

APPLICATION NO.	FILING DATE	FIRST NAMED INVENTOR	ATTORNEY DOCKET NO.	CONFIRMATION NO.
12/378,787	02/19/2009	Hajime Nakagawa	4041J-001552/US	5299

EXAMINER

7590 05/14/2010
HARNESS, DICKEY & PIERCE, P.L.C.
P.O. BOX 828
BLOOMFIELD HILLS, MI 48303

ART UNIT	PAPER NUMBER
2855	

MAIL DATE	DELIVERY MODE
05/14/2010	PAPER

DECISION GRANTING PETITION UNDER 37 CFR 1.138(d)

The declaration of express abandonment is recognized

This is in response to the petition under 37 CFR 1.138(d), requesting for a refund of any previously paid search fee and excess claims fee in the above-identified application.

The petition is granted.

The express abandonment is recognized. Any previously paid search fee and excess claims fee are hereby refunded.

Telephone inquiries should be directed to the Office of Data Management at (571) 272-4200.

Nioni Farmer

Patent Publication Branch
Office of Data Management

Adjustment date: 05/17/2010 NFARMER
02/23/2009 WADDELRI 00000054 12378787
02 FC:1111 -540.00 OP

FORM PET651G (Rev. 08/07)

UNITED STATES PATENT AND TRADEMARK OFFICE

Commissioner for Patents
United States Patent and Trademark Office
P.O. Box 1450
Alexandria, VA 22313-1450
www.uspto.gov

Kenneth Watov, Esq.
WATOV & KIPNES, P.C.
P.O. Box 247
Princeton Junction NJ 08550

COPY MAILED

AUG 14 2009

OFFICE OF PETITIONS

In re Application of	:	
Robert Anthony Mostello	:	
Application No. 12/378,795	:	DECISION ON PETITION
Filed: February 19, 2009	:	TO MAKE SPECIAL UNDER
Attorney Docket No. 13641001DIV2	:	37 CFR 1.102(c)(1)
	:	

This is a decision on the petition under 37 CFR 1.102(c)(1), filed June 23, 2009, to make the above-identified application special based on applicant's age as set forth in M.P.E.P. § 708.02, Section IV.

The petition is **GRANTED**.

A grantable petition to make an application special under 37 CFR 1.102(c)(1) and MPEP § 708.02, Section IV: Applicant's Age must be accompanied by evidence showing that at least one of the applicants is 65 years of age, or more, such as a birth certificate or a statement by applicant. No fee is required

The instant petition includes a statement from the attorney declaring that he/she is in possession of such evidence that shows the applicant is 65 years of age or older. Accordingly, the above-identified application has been accorded "special" status.

Telephone inquiries concerning this decision should be directed to Terri Williams at 571-272-2991.

All other inquiries concerning either the examination or status of the application should be directed to the Technology Center.

The application is being forwarded to the Technology Center Art Unit 3744 for action on the merits commensurate with this decision.

Terri Williams
Petitions Examiner
Office of Petitions

UNITED STATES PATENT AND TRADEMARK OFFICE

Commissioner for Patents
United States Patent and Trademark Office
P.O. Box 1450
Alexandria, VA 22313-1450
www.uspto.gov

DEREK A. PAICE
114 ROSEWOOD COURT
PALM HARBOR, FL 34685

COPY MAILED

APR 13 2009

OFFICE OF PETITIONS

In re Application of	:	
DEREK Albert Paice	:	
Application No. 12/378,796	:	DECISION ON PETITION
Filed: February 20, 2009	:	TO MAKE SPECIAL UNDER
Attorney Docket No.	:	37 CFR 1.102(c)(1)
	:	

This is a decision on the petition under 37 CFR 1.102(c)(1), filed March 18, 2009, to make the above-identified application special based on applicant's age as set forth in M.P.E.P. § 708.02, Section IV.

The petition is **GRANTED**.

A grantable petition to make an application special under 37 CFR 1.102(c)(1) and MPEP § 708.02, Section IV: Applicant's Age must be accompanied by evidence showing that at least one of the applicants is 65 years of age, or more, such as a birth certificate or a statement by applicant. No fee is required

The instant petition includes a statement a statement form applicant. Accordingly, the above-identified application has been accorded "special" status.

Telephone inquiries concerning this decision should be directed to undersigned at 571-272-1642. All other inquiries concerning either the examination or status of the application should be directed to the Technology Center.

The application is being forwarded to the Technology Center Art Unit 2832 for action on the merits commensurate with this decision.

/AMW/
April M. Wise
Petitions Examiner
Office of Petitions

UNITED STATES PATENT AND TRADEMARK OFFICE

Commissioner for Patents
United States Patent and Trademark Office
P.O. Box 1450
Alexandria, VA 22313-1450
www.uspto.gov

WEIDE & MILLER, LTD.
7251 W. LAKE MEAD BLVD.
SUITE 530
LAS VEGAS NV 89128

COPY MAILED

JUN 03 2009

OFFICE OF PETITIONS

In re Application of	:	
Raymond G. Leblond	:	
Application No. 12/378,867	:	DECISION GRANTING PETITION
Filed: February 20, 2009	:	
Attorney Docket No. LISINC.0002P	:	

This is a decision on the petition filed May 7, 2009, requesting that the above-identified application retain the presently accorded a filing date of February 20, 2009, with pages 1and 2 of the specification, as part of the original disclosure.

On February 20, 2009, the above-identified application was filed. On March 11, 2009, the Office of Patent Application Processing mailed a "Notice of Omitted Application Papers" (the "Notice"), stating, in part, that the application had been accorded a filing date of February 20, 2009, however, Figures 1 and 2 of the specification, appeared to have been omitted. The Notice allowed a non-extendable two-month period for reply beginning from the mailing date of the Notice.

In response, on May 7, 2009, applicants filed the present petition and a copy of an Office date-stamped postcard showing that, among other items, seventy-one pages of the specification were received on February 20, 2009. It is noted that by "specification" applicant means the specification, claims, and abstract.

Upon review of the record, pages 1 and 2 of the specification have not been located among the application papers. However, the evidence is convincing that the application papers deposited February 20, 2009, included pages 1 and 2 which were subsequently misplaced by the Office. The application, including pages 1 and 2 as described in the specification was complete on filing and entitled to the presently accorded filing date of February 20, 2009.

Accordingly, the petition is granted. The petition fee of $400.00 will be refunded, in due course.

The application file is being returned to the Office of Patent Application Processing for further processing with the presently accorded filing date of February 20, 2009, including pages 1 and 2 of the specification.

Any inquiries related to this decision should be directed to the undersigned at (571)272-3222.

Kenya A. McLaughlin
Petitions Attorney
Office of Petitions

UNITED STATES PATENT AND TRADEMARK OFFICE

UNITED STATES DEPARTMENT OF COMMERCE
United States Patent and Trademark Office
Address: COMMISSIONER FOR PATENTS
P.O. Box 1450
Alexandria, Virginia 22313-1450
www.uspto.gov

KENYON & KENYON LLP
ONE BROADWAY
NEW YORK, NY 10004

Mail Date: 04/21/2010

Applicant	: Ilan Kor	: DECISION ON REQUEST FOR
Patent Number	: 7598396	: RECALCULATION of PATENT
Issue Date	: 10/06/2009	: TERM ADJUSTMENT IN VIEW
Appliction No	: 12/378,876	: OF WYETH AND NOTICE OF INTENT TO
Filed	: 02/20/2009	: ISSUE CERTIFICATE OF CORRECTION
		:

The Request for Recalculation is **GRANTED** to the extent indicated.

The patent term adjustment has been determined to be **0** days. The USPTO will *sua sponte* issue a certificate of correction reflecting the amount of PTA days determined by the recalculation.

Prior to the issuance of the certificate of correction, the USPTO will afford patentee an opportunity to be heard and request reconsideration. Accordingly, patentee has **one month or thirty (30) days**, whichever is longer, to file a request for reconsideration of this patent term adjustment calculation. See 35 U.S.C. 154(b)(3)(B)(ii) and 37 CFR 1.322(a)(4). No extensions of time will be granted under 37 CFR 1.136.

Patentee should use document code PET.OP if electronically filing a request for reconsideration of this patent term adjustment calculation. The patentee must also include the information required by 37 CFR 1.705(b)(2) and the fee required by 37 CFR 1.18(e). If patentee does not file a timely request for reconsideration of this patent term adjustment calculation including the information required by 37 CFR 1.705(b)(2) and the fee required by 37 CFR 1.18(e), the USPTO will issue a certificate of correction reflecting the PTA determination noted above.

Patentee should be aware that in order to preserve the right to review in the United States District Court for the District of Columbia of the USPTO patent term adjustment determination, patentee must ensure that he or she also take the steps required under 35 U.S.C. 154(b)(4)(A) in a timely manner. Nothing in the request for recalculation should be construed as providing an alternative time frame for commencing a civil action under 35 U.S.C. 154(b)(4)(A).

Any questions concerning this decision should be directed to the Office of Patent Legal Administration at 571-272-7702.

UNITED STATES PATENT AND TRADEMARK OFFICE

Commissioner for Patents
United States Patent and Trademark Office
P.O. Box 1450
Alexandria, VA 22313-1450
www.uspto.gov

COPY MAILED
DEC 17 2009
OFFICE OF PETITIONS

MORRISON & FOERSTER LLP
755 Page Mill Road
Palo Alto, CA 94304-1018

In re Application of	:	
Darren T. Kimura, et al.	:	
Application No. 12/378,911	:	DECISION ON PETITION
Filed: February 20, 2009	:	TO WITHDRAW
Attorney Docket No. 627452000501	:	FROM RECORD
	:	

This is a decision on the Request to Withdraw as attorney or agent of record under 37 C.F.R. § 1.36(b), filed October 20, 2009.

The request is **APPROVED**.

A grantable request to withdraw as attorney/agent of record must be signed by every attorney/agent seeking to withdraw or contain a clear indication that one attorney is signing on behalf of another/others. A request to withdraw will not be approved unless at least 30 (thirty) days would remain between the date of approval and the later of the expiration date of a time to file a response or the expiration date of the maximum time period which can be extended under 37 C.F.R. § 1.136(a).

The request was signed by Christopher B. Eide on behalf of all attorneys of record. All attorneys/agents have been withdrawn. Applicant is reminded that there is no attorney of record at this time.

All future correspondence will be directed to the first named inventor Darren T. Kimura at the address indicated below.

Telephone inquiries concerning this decision should be directed to Terri Johnson at 571-272-2991.

Terri Johnson
Petitions Examiner
Office of Petitions

cc: **MORRISON & FOERSTER LLP**
755 Page Mill RD
Palo Alto, CA 94304-1018

UNITED STATES PATENT AND TRADEMARK OFFICE

UNITED STATES DEPARTMENT OF COMMERCE
United States Patent and Trademark Office
Address: COMMISSIONER FOR PATENTS
P.O. Box 1450
Alexandria, Virginia 22313-1450
www.uspto.gov

APPLICATION NUMBER	FILING OR 371(C) DATE	FIRST NAMED APPLICANT	ATTY. DOCKET NO./TITLE
12/378,911	02/20/2009	Darren T. Kimura	627452000501

CONFIRMATION NO. 1310

POWER OF ATTORNEY NOTICE

25226
MORRISON & FOERSTER LLP
755 PAGE MILL RD
PALO ALTO, CA 94304-1018

OC000000039274671

Date Mailed: 12/17/2009

NOTICE REGARDING CHANGE OF POWER OF ATTORNEY

This is in response to the Power of Attorney filed 10/20/2009.

- The withdrawal as attorney in this application has been accepted. Future correspondence will be mailed to the new address of record. 37 CFR 1.33.

/tsjohnson/

Office of Data Management, Application Assistance Unit (571) 272-4000, or (571) 272-4200, or 1-888-786-0101

UNITED STATES PATENT AND TRADEMARK OFFICE

UNITED STATES DEPARTMENT OF COMMERCE
United States Patent and Trademark Office
Address: COMMISSIONER FOR PATENTS
P.O. Box 1450
Alexandria, Virginia 22313-1450
www.uspto.gov

BACON & THOMAS, PLLC
625 SLATERS LANE
FOURTH FLOOR
ALEXANDRIA, VA 22314-1176

Mail Date: 07/26/2010

Applicant	: Yaw-Huey Lai	: DECISION ON REQUEST FOR
Patent Number	: 7648399	: RECALCULATION of PATENT
Issue Date	: 01/19/2010	: TERM ADJUSTMENT IN VIEW
Application No	: 12/379,136	: OF WYETH AND NOTICE OF INTENT TO
Filed	: 02/13/2009	: ISSUE CERTIFICATE OF CORRECTION
		:

The Request for Recalculation is **GRANTED** to the extent indicated.

The patent term adjustment has been determined to be **0** days. The USPTO will *sua sponte* issue a certificate of correction reflecting the amount of PTA days determined by the recalculation.

Prior to the issuance of the certificate of correction, the USPTO will afford patentee an opportunity to be heard and request reconsideration. Accordingly, patentee has **one month or thirty (30) days**, whichever is longer, to file a request for reconsideration of this patent term adjustment calculation. See 35 U.S.C. 154(b)(3)(B)(ii) and 37 CFR 1.322(a)(4). No extensions of time will be granted under 37 CFR 1.136.

Patentee should use document code PET.OP if electronically filing a request for reconsideration of this patent term adjustment calculation. The patentee must also include the information required by 37 CFR 1.705(b)(2) and the fee required by 37 CFR 1.18(e). If patentee does not file a timely request for reconsideration of this patent term adjustment calculation including the information required by 37 CFR 1.705(b)(2) and the fee required by 37 CFR 1.18(e), the USPTO will issue a certificate of correction reflecting the PTA determination noted above.

Patentee should be aware that in order to preserve the right to review in the United States District Court for the District of Columbia of the USPTO patent term adjustment determination, patentee must ensure that he or she also take the steps required under 35 U.S.C. 154(b)(4)(A) in a timely manner. Nothing in the request for recalculation should be construed as providing an alternative time frame for commencing a civil action under 35 U.S.C. 154(b)(4)(A).

Any questions concerning this decision should be directed to the Office of Patent Legal Administration at 571-272-7702.

UNITED STATES PATENT AND TRADEMARK OFFICE

UNITED STATES DEPARTMENT OF COMMERCE
United States Patent and Trademark Office
Address: COMMISSIONER FOR PATENTS
P.O. Box 1450
Alexandria, Virginia 22313-1450
www.uspto.gov

APPLICATION NO.	FILING DATE	FIRST NAMED INVENTOR	ATTORNEY DOCKET NO.	CONFIRMATION NO.
12/379,187	02/13/2009	Kunio Takayama	P58883	9952

7590 10/26/2009
ROBERT E. BUSHNELL & LAW FIRM
2029 K STREET NW
SUITE 600
WASHINGTON, DC 20006-1004

EXAMINER

ART UNIT	PAPER NUMBER
2629	

MAIL DATE	DELIVERY MODE
10/26/2009	PAPER

DECISION GRANTING PETITION UNDER 37 CFR 1.138(d)

The declaration of express abandonment is recognized

This is in response to the petition under 37 CFR 1.138(d), requesting for a refund of any previously paid search fee and excess claims fee in the above-identified application.

The petition is granted.

The express abandonment is recognized. Any previously paid search fee and excess claims fee are hereby refunded.

Telephone inquiries should be directed to the Office of Data Management at (571) 272-4200.

Nioni Farmer

Patent Publication Branch
Office of Data Management

Replr. Ref: 10/26/2009 NFARMER 0314545000
DAN:024543 Name/Number:12379187
FC: 9204 $540.00 CR

Adjustment date: 10/26/2009 NFARMER
02/17/2009 SZEWDIE1 00000002 12379187
02 FC:1111 -540.00 OP

FORM PET651G (Rev. 08/07)

UNITED STATES PATENT AND TRADEMARK OFFICE

Commissioner for Patents
United States Patent and Trademark Office
P.O. Box 1450
Alexandria, VA 22313-1450
www.uspto.gov

COPY MAILED

SEP 30 2009

OFFICE OF PETITIONS

JONES DAY
222 EAST 41ST ST
NEW YORK, NY 10017

In re Application of Diepen et al.	:	
Application No. 12/379,231	:	Decision on Petition
Filing Date: February 17, 2009	:	
Attorney Docket No. 011803-0023-999	:	

This is a decision in response to the petition filed May 11, 2009, requesting the application be accorded a filing date of February 17, 2009.

The petition is **granted**.

Application papers were filed February 17, 2009.

The application papers included twelve pages of specification which included the following information in the header on each page: "WO 02/20147" and "PCT/NL01/00681."

The application papers also included a preliminary amendment to the specification. The amendment added priority claims to the specification.

The Office of Patent Application Processing mailed a "Notice of Incomplete Nonprovisional Application" on March 11, 2009. The Notice stated the specification failed to include a written description of the invention.

A review of the record appears to indicate the Office failed to recognize petitioner's intent for the copies of the specification pages from the priority document to serve as the specification for the instant application.[1]

The Notice mailed March 11, 2009, was sent in error and is hereby vacated.

The petition fee of $400 has been credited back to petitioner's deposit account.

[1] In the future, if petitioner wishes to use a PCT application as a specification for another application, he may wish to delete the heading on every page (i.e. PCT/US97/20989). If papers are filed in the instant application with a number in the header, then the number should be the instant application number and not the number of a parent or grandparent application.

The Office of Patent Application Processing will be informed of the instant decision will process the application with a filing date of February 17, 2009, using the papers filed on February 17, 2009, including pages with the terms "WO 02/20147" and "PCT/NL01/00681" in the header.

Telephone inquiries regarding this communication should be directed to Petitions Attorney Steven Brantley at (571) 272-3203.

Charles Steven Brantley
Senior Petitions Attorney
Office of Petitions

UNITED STATES PATENT AND TRADEMARK OFFICE

Commissioner for Patents
United States Patent and Trademark Office
P.O. Box 1450
Alexandria, VA 22313-1450
www.uspto.gov

Litman Law Offices, Ltd.
Post Office Box 15035
Crystal City Station
Arlington, VA 22215-0035

COPY MAILED

APR 17 2009

OFFICE OF PETITIONS

In re Application of :
Joe H. Ashley :
Application No. 12/379,367 : DECISION ON PETITION
Filed: February 19, 2009 : TO MAKE SPECIAL UNDER
Attorney Docket No. 25758.01 : 37 CFR 1.102(c)(1)
:

This is a decision on the petition under 37 CFR 1.102(c)(1), filed February 19, 2009, to make the above-identified application special based on applicant's age as set forth in M.P.E.P. § 708.02, Section IV.

The petition is **GRANTED**.

A grantable petition to make an application special under 37 CFR 1.102(c)(1) and MPEP § 708.02, Section IV: Applicant's Age must be accompanied by evidence showing that at least one of the applicants is 65 years of age, or more, such as a birth certificate or a statement by applicant. No fee is required

The instant petition includes a statement by applicant that he is 65 years of age or older. Accordingly, the above-identified application has been accorded "special" status.

Telephone inquiries concerning this decision should be directed to Kimberly Inabinet at 571-272-4618.

All other inquiries concerning the status of the application should be directed to the Office of Patent Examination Processing at 571-272-4000.

Upon completion of the pre-examination processing by the Office of Patent Application Processing, this application will be referred to Technology Center Art Unit 3611 for action on the merits commensurate with this decision.

Kimberly Inabinet
Petitions Examiner
Office of Petitions

UNITED STATES PATENT AND TRADEMARK OFFICE

UNITED STATES DEPARTMENT OF COMMERCE
United States Patent and Trademark Office
Address: COMMISSIONER FOR PATENTS
P.O. Box 1450
Alexandria, Virginia 22313-1450
www.uspto.gov

APPLICATION NO.	FILING DATE	FIRST NAMED INVENTOR	ATTORNEY DOCKET NO.	CONFIRMATION NO.
12/379,373	02/19/2009	Hirotomo Izumi	1095.1493	5881

7590 01/11/2010

STAAS & HALSEY LLP
SUITE 700
1201 NEW YORK AVENUE, N.W.
WASHINGTON, DC 20005

EXAMINER
VANDERPUYE, KENNETH N

ART UNIT	PAPER NUMBER
2613	

MAIL DATE	DELIVERY MODE
01/11/2010	PAPER

DECISION GRANTING PETITION UNDER 37 CFR 1.138(d)

The declaration of express abandonment is recognized

This is in response to the petition under 37 CFR 1.138(d), requesting for a refund of any previously paid search fee and excess claims fee in the above-identified application.

The petition is granted.

The express abandonment is recognized. Any previously paid search fee and excess claims fee are hereby refunded.

Telephone inquiries should be directed to the Office of Data Management at (571) 272-4200.

Nioni Farmer

Patent Publication Branch
Office of Data Management

Repln. Ref: 01/11/2010 NFARMER 0012420482
[illegible] Name/Number: 12379373
FC: 9204 8540.00 OR

Adjustment date: 01/11/2010 NFARMER
02/20/2009 SZEWDIE1 00000031 12379373
02 FC:1111 -540.00 OP

FORM PET651G (Rev. 08/07)

UNITED STATES PATENT AND TRADEMARK OFFICE

UNITED STATES DEPARTMENT OF COMMERCE
United States Patent and Trademark Office
Address: COMMISSIONER FOR PATENTS
P.O. Box 1450
Alexandria, Virginia 22313-1450
www.uspto.gov

APPLICATION NO.	FILING DATE	FIRST NAMED INVENTOR	ATTORNEY DOCKET NO.	CONFIRMATION NO.
12/379,374	02/19/2009	Sung-Duck Chun	8737.113.00	4221

30827 7590 10/29/2009
MCKENNA LONG & ALDRIDGE LLP
1900 K STREET, NW
WASHINGTON, DC 20006

EXAMINER

ART UNIT	PAPER NUMBER
2472	

MAIL DATE	DELIVERY MODE
10/29/2009	PAPER

Please find below and/or attached an Office communication concerning this application or proceeding.

The time period for reply, if any, is set in the attached communication.

UNITED STATES PATENT AND TRADEMARK OFFICE

Commissioner for Patents
United States Patent and Trademark Office
P.O. Box 1450
Alexandria, VA 22313-1450
www.uspto.gov

MCKENNA LONG & ALDRIDGE LLP
1900 K STREET, NW
WASHINGTON DC 20006

In re Application of: Sung-Duck Chun, et al.
Application No. 12/379,374
Filed: February 19, 2009
For: APPARATUS AND METHED FOR CONSTRUCTING A DATA UNIT THAT INCLUDES A BUFFER STATUS REPORT

DECISION ON REQUEST TO PARTICIPATE IN PATENT PROSECUTION HIGHWAY PROGRAM AND PETITION TO MAKE SPECIAL UNDER 37 CFR 1.102(d)

MAILED

OCT 29 2009

DIRECTOR OFFICE
TECHNOLOGY CENTER 2400

This is a decision on the request to participate in the Patent Prosecution Highway (PPH) program and the petition under 37 CFR 1.102(d), filed October 2, 2009, to make the above-identified application special.

The petition is **DISMISSED.**

A grantable request to participate in the PPH program and petition to make special require:

(1) The U.S. application must validly claim priority under 35 U.S.C. 119(a) to one or more applications filed in the KIPO;

(2) Applicant must submit a copy of the allowable/patentable claim(s) from the KIPO application(s) along with an English translation thereof and a statement that the English translation is accurate;

(3) All the claims in the U.S. application must sufficiently correspond or be amended to sufficiently correspond to the allowable/patentable claim(s) in the KIPO application(s);

(4) Examination of the U.S. application has not begun;

(5) Applicant must submit a copy of all the office actions from each of the KIPO application(s) containing the allowable/patentable claim(s) along with an English translation thereof and a statement that the English translation is accurate;

(6) Applicant must submit an IDS listing the documents cited by the KIPO examiner in the KIPO office action along with copies of documents except U.S. patents or U.S. patent application publications; and

(7) The required petition fee under 37 CFR 1.17(h).

The request to participate in the PPH program and petition failed items (2) and (5) above, because of failure to submit statements to the effect that the English translation of the claims and the Office actions are accurate.

Accordingly, the Petition is **DISMISSED**.

Applicant is given a time period of ONE MONTH or THIRTY DAYS, whichever is longer, to correct the deficiencies. NO EXTENSION OF TIME UNDER 37 CFR 1.136 IS PERMITTED.

If the deficiencies are not corrected with the time period given, the application will await action in its regular turn.

Responses must be submitted by EFS-Web using the document description "Petition to make special under Pat Pros Hwy".

Telephone inquiries concerning this decision should be directed to Hassan Kizou at 571-272-3088

All other inquiries concerning the examination or status of the application is accessible in the PAIR system at http://www.uspto.gov/ebc/index.html.

Hassan Kizou
Quality Assurance Specialist, Technology Center 2400

UNITED STATES PATENT AND TRADEMARK OFFICE

UNITED STATES DEPARTMENT OF COMMERCE
United States Patent and Trademark Office
Address: COMMISSIONER FOR PATENTS
P.O. Box 1450
Alexandria, Virginia 22313-1450
www.uspto.gov

APPLICATION NO.	FILING DATE	FIRST NAMED INVENTOR	ATTORNEY DOCKET NO.	CONFIRMATION NO.
12/379,374	02/19/2009	Sung-Duck Chun	8737.113.00	4221

30827 7590 12/03/2009
MCKENNA LONG & ALDRIDGE LLP
1900 K STREET, NW
WASHINGTON, DC 20006

EXAMINER

ART UNIT	PAPER NUMBER
2472	

MAIL DATE	DELIVERY MODE
12/03/2009	PAPER

Please find below and/or attached an Office communication concerning this application or proceeding.

The time period for reply, if any, is set in the attached communication.

UNITED STATES PATENT AND TRADEMARK OFFICE

MAILED

DEC 03 2009

DIRECTOR OFFICE
TECHNOLOGY CENTER 2400

Commissioner for Patents
United States Patent and Trademark Office
P.O. Box 1450
Alexandria, VA 22313-1450
www.uspto.gov

MCKENNA LONG & ALDRIDGE LLP
1900 K STREET, NW
WASHINGTON DC 20006

In re Application of: Sung-Duck Chun, et al.
Application No. 12/379,374
Filed: February 19, 2009
For: APPARATUS AND METHED FOR CONSTRUCTING A DATA UNIT THAT INCLUDES A BUFFER STATUS REPORT

DECISION ON REQUEST TO PARTICIPATE IN PATENT PROSECUTION HIGHWAY PROGRAM AND PETITION TO MAKE SPECIAL UNDER 37 CFR 1.102(d)

This is a decision on the renewed request to participate in the Patent Prosecution Highway (PPH) program and the petition under 37 CFR 1.102(d), filed November 24, 2009, to make the above-identified application special.

The petition is **GRANTED.**

A grantable request to participate in the PPH program and petition to make special require:

(1) The U.S. application must validly claim priority under 35 U.S.C. 119(a) to one or more applications filed in the KIPO;

(2) Applicant must submit a copy of the allowable/patentable claim(s) from the KIPO application(s) along with an English translation thereof and a statement that the English translation is accurate;

(3) All the claims in the U.S. application must sufficiently correspond or be amended to sufficiently correspond to the allowable/patentable claim(s) in the KIPO application(s);

(4) Examination of the U.S. application has not begun;

(5) Applicant must submit a copy of all the office actions from each of the KIPO application(s) containing the allowable/patentable claim(s) along with an English translation thereof and a statement that the English translation is accurate;

(6) Applicant must submit an IDS listing the documents cited by the KIPO examiner in the KIPO office action along with copies of documents except U.S. patents or U.S. patent application publications; and

(7) The required petition fee under 37 CFR 1.17(h).

The original request to participate in the PPH program and petition failed was dismissed because of failure to submit statements to the effect that the English translation of the claims and the Office actions are accurate. Petitioner has timely submitted this missing document in response to the previous petition decision mailed October 29, 2009.
The request to participate in the PPH program and petition are now found to comply with the above requirements. Accordingly, the above-identified application has been accorded "special" status.

Telephone inquiries concerning this decision should be directed to Hassan Kizou at 571-272-3088

All other inquiries concerning the examination or status of the application is accessible in the PAIR system at http://www.uspto.gov/ebc/index.html.

The application is being forwarded to the examiner for action on the merits commensurate with this decision.

Hassan Kizou
Quality Assurance Specialist, Technology Center 2400

UNITED STATES PATENT AND TRADEMARK OFFICE

UNITED STATES DEPARTMENT OF COMMERCE
United States Patent and Trademark Office
Address: COMMISSIONER FOR PATENTS
P.O. Box 1450
Alexandria, Virginia 22313-1450
www.uspto.gov

APPLICATION NO.	FILING DATE	FIRST NAMED INVENTOR	ATTORNEY DOCKET NO.	CONFIRMATION NO.
12/379,375	02/19/2009	Sung-Duck Chun	8737.112.00	3283

30827 7590 10/23/2009
MCKENNA LONG & ALDRIDGE LLP
1900 K STREET, NW
WASHINGTON, DC 20006

EXAMINER

ART UNIT	PAPER NUMBER
2472	

MAIL DATE	DELIVERY MODE
10/23/2009	PAPER

Please find below and/or attached an Office communication concerning this application or proceeding.

The time period for reply, if any, is set in the attached communication.

UNITED STATES PATENT AND TRADEMARK OFFICE

MAILED

OCT 23 2009

DIRECTOR OFFICE
TECHNOLOGY CENTER 2400

Commissioner for Patents
United States Patent and Trademark Office
P.O. Box 1450
Alexandria, VA 22313-1450
www.uspto.gov

MCKENNA LONG & ALDRIDGE LLP
1900 K STREET, NW
WASHINGTON DC 20006

In re Application of: Sung-Duck Chun, et al.
Application No. 12/379,375
Filed: February 19, 2009
For: **METHOD AND APPARATUS FOR PROCESSING PADDING BUFFER STATUS REPORTS**

DECISION ON REQUEST TO PARTICIPATE IN PATENT PROSECUTION HIGHWAY PROGRAM AND PETITION TO MAKE SPECIAL UNDER 37 CFR 1.102(d)

This is a decision on the request to participate in the Patent Prosecution Highway (PPH) program and the petition under 37 CFR 1.102(d), filed October 2, 2009, to make the above-identified application special.

The petition is **DISMISSED.**

A grantable request to participate in the PPH program and petition to make special require:

(1) The U.S. application must validly claim priority under 35 U.S.C. 119(a) to one or more applications filed in the KIPO;

(2) Applicant must submit a copy of the allowable/patentable claim(s) from the KIPO application(s) along with an English translation thereof and a statement that the English translation is accurate;

(3) All the claims in the U.S. application must sufficiently correspond or be amended to sufficiently correspond to the allowable/patentable claim(s) in the KIPO application(s);

(4) Examination of the U.S. application has not begun;

(5) Applicant must submit a copy of all the office actions from each of the KIPO application(s) containing the allowable/patentable claim(s) along with an English translation thereof and a statement that the English translation is accurate;

(6) Applicant must submit an IDS listing the documents cited by the KIPO examiner in the KIPO office action along with copies of documents except U.S. patents or U.S. patent application publications; and

(7) The required petition fee under 37 CFR 1.17(h).

The request to participate in the PPH program and petition failed items (2) and (5) above, because of failure to submit statements to the effect that the English translation of the claims and the Office actions are accurate.

Accordingly, the Petition is **DISMISSED**.

Applicant is given a time period of ONE MONTH or THIRTY DAYS, whichever is longer, to correct the deficiencies. NO EXTENSION OF TIME UNDER 37 CFR 1.136 IS PERMITTED.

If the deficiencies are not corrected with the time period given, the application will await action in its regular turn.

Responses must be submitted by EFS-Web using the document description "Petition to make special under Pat Pros Hwy".

Telephone inquiries concerning this decision should be directed to Hassan Kizou at 571-272-3088

All other inquiries concerning the examination or status of the application is accessible in the PAIR system at http://www.uspto.gov/ebc/index.html.

Hassan Kizou
Quality Assurance Specialist, Technology Center 2400

UNITED STATES PATENT AND TRADEMARK OFFICE

UNITED STATES DEPARTMENT OF COMMERCE
United States Patent and Trademark Office
Address: COMMISSIONER FOR PATENTS
P.O. Box 1450
Alexandria, Virginia 22313-1450
www.uspto.gov

APPLICATION NO.	FILING DATE	FIRST NAMED INVENTOR	ATTORNEY DOCKET NO.	CONFIRMATION NO.
12/379,375	02/19/2009	Sung-Duck Chun	8737.112.00	3283

30827 7590 12/03/2009
MCKENNA LONG & ALDRIDGE LLP
1900 K STREET, NW
WASHINGTON, DC 20006

EXAMINER

ART UNIT	PAPER NUMBER
2472	

MAIL DATE	DELIVERY MODE
12/03/2009	PAPER

Please find below and/or attached an Office communication concerning this application or proceeding.

The time period for reply, if any, is set in the attached communication.

UNITED STATES PATENT AND TRADEMARK OFFICE

MAILED

DEC 03 2009

DIRECTOR OFFICE
TECHNOLOGY CENTER 2400

Commissioner for Patents
United States Patent and Trademark Office
P.O. Box 1450
Alexandria, VA 22313-1450
www.uspto.gov

MCKENNA LONG & ALDRIDGE LLP
1900 K STREET, NW
WASHINGTON DC 20006

In re Application of: Sung-Duck Chun, et al.
Application No. 12/379,375
Filed: February 19, 2009
For: METHOD AND APPARATUS FOR PROCESSING PADDING BUFFER STATUS REPORTS

DECISION ON REQUEST TO PARTICIPATE IN PATENT PROSECUTION HIGHWAY PROGRAM AND PETITION TO MAKE SPECIAL UNDER 37 CFR 1.102(d)

This is a decision on the renewed request to participate in the Patent Prosecution Highway (PPH) program and the petition under 37 CFR 1.102(d), filed November 24, 2009, to make the above-identified application special.

The petition is **GRANTED.**

A grantable request to participate in the PPH program and petition to make special require:

(1) The U.S. application must validly claim priority under 35 U.S.C. 119(a) to one or more applications filed in the KIPO;

(2) Applicant must submit a copy of the allowable/patentable claim(s) from the KIPO application(s) along with an English translation thereof and a statement that the English translation is accurate;

(3) All the claims in the U.S. application must sufficiently correspond or be amended to sufficiently correspond to the allowable/patentable claim(s) in the KIPO application(s);

(4) Examination of the U.S. application has not begun;

(5) Applicant must submit a copy of all the office actions from each of the KIPO application(s) containing the allowable/patentable claim(s) along with an English translation thereof and a statement that the English translation is accurate;

(6) Applicant must submit an IDS listing the documents cited by the KIPO examiner in the KIPO office action along with copies of documents except U.S. patents or U.S. patent application publications; and

(7) The required petition fee under 37 CFR 1.17(h).

The original request to participate in the PPH program and petition failed was dismissed because of failure to submit statements to the effect that the English translation of the claims and the Office actions are accurate. Petitioner has timely submitted this missing document in response to the previous petition decision mailed October 23, 2009.
The request to participate in the PPH program and petition are now found to comply with the above requirements. Accordingly, the above-identified application has been accorded "special" status.

Telephone inquiries concerning this decision should be directed to Hassan Kizou at 571-272-3088

All other inquiries concerning the examination or status of the application is accessible in the PAIR system at http://www.uspto.gov/ebc/index.html.

The application is being forwarded to the examiner for action on the merits commensurate with this decision.

Hassan Kizou
Quality Assurance Specialist, Technology Center 2400

UNITED STATES PATENT AND TRADEMARK OFFICE

Commissioner for Patents
United States Patent and Trademark Office
P.O. Box 1450
Alexandria, VA 22313-1450
www.uspto.gov

PARTEQ RESEARCH & DEVELOPMENT INNOVATIONS
QUEEN'S UNIVERSITY
KINGSTON ON K7L 3N6 CA CANADA

MAILED

OCT 07 2009

OFFICE OF PETITIONS

In re Application of :
Zhiliang Zhang, et al. :
Application No. 12/379,481 : ON PETITION
Filed: February 23, 2009 :
Attorney Docket No. 2007-006-02US :

This is a decision in response to the "PETITION under 37 CFR 1.182 TO OBTAIN ORIGINAL DATE OF APPLICATION DEPOSIT," filed June 17, 2009. Petitioner requests that the application be accorded a filing date of February 20, 2009, rather than the presently accorded date of February 23, 2009.

The petition is **DISMISSED.**

Any request for reconsideration must be filed within **TWO MONTHS** of the mailing date of this decision. This period is governed by 37 CFR 1.181(f) and is not extendable under 37 CFR 1.136(a).

Petitioner requests the earlier filing date on the basis that the application was delivered by FedEx courier on February 20, 2009. Petitioner explains that since Express Mailing procedures were not available in Canada, the application was sent using FedEx overnight delivery. Petitioner submits a copy of the FedEx delivery receipt showing that R. Hicks signed for a package delivered to U.S. Patent and Trademark Office on February 20, 2009 at 9:20am.

Since the application was not filed electronically or under the provisions of 37 CFR 1.10, the proof required to show that the application was filed on the desired date must be in the form of a postcard or hand stamped receipt complying with MPEP 503. A review of the application papers indicate the papers were received on February 23, 2009, as shown by the Office date stamp. The evidence submitted cannot be relied on to establish that the application was received on a date other than February 23, 2009.

It is noted that this application claims benefit of a provisional application filed February 22, 2008. Petitioner should note that, since the day of the priority year fell on a Sunday, it is proper that the present application claiming benefit of the provisional application be filed on the next succeeding business day, i.e, February 23, 2009. See 37 CFR 1.7(b).

The application is being forwarded to the Office of Patent Application Processing for further processing with a filing date of February 23, 2008.

Telephone inquiries specific to this decision may be directed to the undersigned at (571) 272-3204.

Sherry D. Brinkley
Petitions Examiner
Office of Petitions

UNITED STATES PATENT AND TRADEMARK OFFICE

Commissioner for Patents
United States Patent and Trademark Office
P.O. Box 1450
Alexandria, VA 22313-1450
www.uspto.gov

COPY MAILED

SEP 30 2009

OFFICE OF PETITIONS

MCKENNA LONG & ALDRIDGE LLP
1900 K STREET, NW
WASHINGTON DC 20006

In re Application of	:	
Han Ki Cho	:	
Application No. 12/379,544	:	NOTICE
Filed: February 24, 2009	:	
Attorney Docket No. **9988.116.11**	:	

This is a notice regarding your request filed March 18, 2009, for acceptance of a fee deficiency submission under 37 CFR 1.28.

The Office no longer investigates or rejects original or reissue applications under 37 CFR 1.56. **1098 Off. Gaz. Pat. Office 502 (January 3, 1989)**. Therefore, nothing in this Notice is intended to imply that an investigation was done.

Your fee deficiency submission under 37 CFR 1.28 is hereby **ACCEPTED**.

There is no indication that the person signing the petition was ever given a power of attorney to prosecute the application. However, in accordance with 37 CFR 1.34, the signature of Michael I. Angert appearing on the correspondence shall constitute a representation to the United States Patent and Trademark Office that he is authorized to represent the particular party in whose behalf he acts. If, Michael I. Angert desires to be acknowledged as the attorney of record the appropriate power of attorney document must be submitted.

This application is no longer entitled to small entity status. Accordingly, all future fees paid in this application must be paid at the large entity rate.

Inquiries related to this communication should be directed to the undersigned at (571) 272-4584.

JoAnne Burke
Petitions Examiner
Office of Petitions

UNITED STATES PATENT AND TRADEMARK OFFICE

UNITED STATES DEPARTMENT OF COMMERCE
United States Patent and Trademark Office
Address: COMMISSIONER FOR PATENTS
P.O. Box 1450
Alexandria, Virginia 22313-1450
www.uspto.gov

BACON & THOMAS, PLLC
625 SLATERS LANE
FOURTH FLOOR
ALEXANDRIA, VA 22314-1176

Mail Date: 05/04/2010

Applicant	: Wei Hung Yu	: DECISION ON REQUEST FOR
Patent Number	: 7611254	: RECALCULATION of PATENT
Issue Date	: 11/03/2009	: TERM ADJUSTMENT IN VIEW
Application No	: 12/379,557	: OF WYETH AND NOTICE OF INTENT TO
Filed	: 02/25/2009	: ISSUE CERTIFICATE OF CORRECTION
		:

The Request for Recalculation is **GRANTED** to the extent indicated.

The patent term adjustment has been determined to be **0** days. The USPTO will *sua sponte* issue a certificate of correction reflecting the amount of PTA days determined by the recalculation.

Prior to the issuance of the certificate of correction, the USPTO will afford patentee an opportunity to be heard and request reconsideration. Accordingly, patentee has **one month or thirty (30) days**, whichever is longer, to file a request for reconsideration of this patent term adjustment calculation. See 35 U.S.C. 154(b)(3)(B)(ii) and 37 CFR 1.322(a)(4). No extensions of time will be granted under 37 CFR 1.136.

Patentee should use document code PET.OP if electronically filing a request for reconsideration of this patent term adjustment calculation. The patentee must also include the information required by 37 CFR 1.705(b)(2) and the fee required by 37 CFR 1.18(e). If patentee does not file a timely request for reconsideration of this patent term adjustment calculation including the information required by 37 CFR 1.705(b)(2) and the fee required by 37 CFR 1.18(e), the USPTO will issue a certificate of correction reflecting the PTA determination noted above.

Patentee should be aware that in order to preserve the right to review in the United States District Court for the District of Columbia of the USPTO patent term adjustment determination, patentee must ensure that he or she also take the steps required under 35 U.S.C. 154(b)(4)(A) in a timely manner. Nothing in the request for recalculation should be construed as providing an alternative time frame for commencing a civil action under 35 U.S.C. 154(b)(4)(A).

Any questions concerning this decision should be directed to the Office of Patent Legal Administration at 571-272-7702.

UNITED STATES PATENT AND TRADEMARK OFFICE

Commissioner for Patents
United States Patent and Trademark Office
P.O. Box 1450
Alexandria, VA 22313-1450
www.uspto.gov

KANESAKA BERNER AND PARTNERS, LLP
1700 DIAGONAL RD
SUITE 310
ALEXANDRIA, VA 22314-2848

MAILED

FEB 18 2010

OFFICE OF PETITIONS

In re Application of
Shojiro Komatsu, et. al.
Application No. 12/379,723
Filed: February 27, 2009
Attorney Docket No. TCP-005A

DECISION ON PETITION

This is a decision on the petition under 37 CFR 1.181 (no fee) filed December 10, 2009, requesting withdrawal of the holding of abandonment in the above-identified application.

This application was held abandoned for failure to file a timely response to the Notice to File Corrected Application Papers mailed on March 30, 2009. A Notice of Abandonment was mailed December 7, 2009.

Petitioner states that a reply was in fact timely filed on April 10, 2009. To support this assertion, petitioner has submitted a copy of a return postcard which acknowledges receipt by the U.S. Patent and Trademark Office (USPTO) on April 10, 2009 of, *inter alia,* one sheet of formal drawings. A copy of the previously submitted reply accompanies the petition.

The petition is **GRANTED**.

MPEP 503 states that "[a] post card receipt which itemizes and properly identifies the papers which are being filed serves as *prima facie* evidence of receipt in the USPTO of all the items listed thereon on the date stamped thereon by the USPTO." Accordingly, it is concluded that the response was timely received in the USPTO, but misplaced thereafter.

In view of the above, the holding of abandonment is hereby withdrawn and the application restored to pending status.

The copy of the reply supplied with the petition will be accepted in place of the reply shown to have been received by the USPTO on April 10, 2009.

This application is being referred to the Office of Patent Application Processing for further processing in accordance with this decision.

Andrea Smith
Petitions Examiner
Office of Petitions

UNITED STATES PATENT AND TRADEMARK OFFICE

Commissioner for Patents
United States Patent and Trademark Office
P.O. Box 1450
Alexandria, VA 22313-1450
www.uspto.gov

FOLEY AND LARDNER LLP
SUITE 500
3000 K STREET NW
WASHINGTON DC 20007

COPY MAILED

AUG 3 1 2009

OFFICE OF PETITIONS

In re Application of	:	
Masaaki Nishino et al.	:	
Application No. 12/379,733	:	DECISION ON PETITION
Filed: February 27, 2009	:	TO WITHDRAW
Attorney Docket No. **0450447-0306**	:	FROM RECORD
	:	

This is a decision on the Request to Withdraw as attorney or agent of record under 37 CFR § 1.36(b), filed July 16, 2009.

The request is **NOT APPROVED**.

A grantable request to withdraw as attorney/agent of record must be signed by every attorney/agent seeking to withdraw or contain a clear indication that one attorney is signing on behalf of another/others.

The request cannot be approved because the attorney cannot withdraw using the Customer Number. The power of attorney was granted originally to individual attorneys listed in the Power of Attorney filed April 20, 2009.

The request also lacks the most current address information for the first named inventor or, the most current address of the assignee of the entire interest that properly became of record under 37 CFR 3.71.

All future communications from the Office will continue to be directed to the above-listed address until otherwise notified by applicant.

Telephone inquiries concerning this decision should be directed to JoAnne Burke at 571-272-4584.

JoAnne Burke
Petitions Examiner
Office of Petitions

UNITED STATES PATENT AND TRADEMARK OFFICE

UNITED STATES DEPARTMENT OF COMMERCE
United States Patent and Trademark Office
Address: COMMISSIONER FOR PATENTS
P.O. Box 1450
Alexandria, Virginia 22313-1450
www.uspto.gov

APPLICATION NO.	FILING DATE	FIRST NAMED INVENTOR	ATTORNEY DOCKET NO.	CONFIRMATION NO.
12/379,750	02/27/2009	Seiji Shimokawa	140735	9877

7590 03/08/2010
OLIFF & BERRIDGE, PLC
P.O. BOX 320850
ALEXANDRIA, VA 22320-4850

EXAMINER
KOONTZ, TAMMY J

ART UNIT	PAPER NUMBER
3974	

NOTIFICATION DATE	DELIVERY MODE
03/08/2010	ELECTRONIC

DECISION GRANTING PETITION UNDER 37 CFR 1.138(d)

The declaration of express abandonment is recognized

This is in response to the petition under 37 CFR 1.138(d), requesting for a refund of any previously paid search fee and excess claims fee in the above-identified application.

The petition is granted.

The express abandonment is recognized. Any previously paid search fee and excess claims fee are hereby refunded.

Telephone inquiries should be directed to the Office of Data Management at (571) 272-4200.

Betty Powell
Patent Publication Branch
Office of Data Management

FORM PET651G (Rev. 08/07)

UNITED STATES PATENT AND TRADEMARK OFFICE

Commissioner for Patents
United States Patent and Trademark Office
P.O. Box 1450
Alexandria, VA 22313-1450
www.uspto.gov

LOUIS WOO
LAW OFFICE OF LOUIS WOO
717 NORTH FAYETTE STREET
ALEXANDRIA VA 22314

COPY MAILED

MAR 2 7 2009

OFFICE OF PETITIONS

In re Application of	:	
Ross et al.	:	DECISION REFUSING STATUS
Application No. 12/379,756	:	UNDER 37 CFR 1.47(a)
Filed: February 27, 2009	:	
Attorney Docket No. 0107/0058	:	

This is in response to the petition under 37 CFR 1.47(a), filed February 27, 2009.

The petition is dismissed.

Rule 47 applicant is given TWO MONTHS from the mailing date of this decision to reply, correcting the below-noted deficiencies. Any reply should be entitled "Request for Reconsideration of Petition Under 37 CFR 1.47(a)," and should only address the deficiencies noted below, except that the reply may include an oath or declaration executed by the non-signing inventor. **FAILURE TO RESPOND WILL RESULT IN ABANDONMENT OF THE APPLICATION.** Any extensions of time will be governed by 37 CFR 1.136(a).

A grantable petition under 37 CFR 1.47(a) requires: (1) proof that the non-signing inventor cannot be reached or refuses to sign the oath or declaration after having been presented with the application papers (specification, claims and drawings); (2) an acceptable oath or declaration in compliance with 35 U.S.C. §§ 115 and 116; (3) the petition fee; and (4) a statement of the last known address of the non-signing inventor. Applicant lacks item(s) (1) set forth above.

Pursuant to the general authorization provided by attorney Woo, the $200.00 petition fee will be charged to deposit account 50-0501. However, it should be noted that applicant Ross is not authorized to charge the deposit account. Further, the Office is accepting the signature of inventor Ross on the petition in this instance because the allegation that the other two inventors will not sign the application papers. However, traditionally the attorney is required to sign the petition pursuant to 37 CFR 1.33(b).

As to item (1), rule 47 applicant must demonstrate with documented evidence that an inventor refuses to join in the application after having been presented with the application papers (specification, claims, drawings and oath or declaration). Petitioner has provided evidence to establish that the application papers were mailed to the last known address. However a review of the Federal Express records shows that the application papers were left at the door no signature was required. Petitioner is unable to establish that inventor Searle received the application papers. If the application papers were not received, the Office cannot conclude the failure of the

inventor to reply is refusal to execute the application papers. Did inventor call to confirm whether the application papers were received? Unless petitioner can show that a copy of the application papers was presented to the joint inventors, then petitioner will have to mail a copy of the complete application papers (specification, claims and drawings) to the last known address of the joint inventors, return receipt requested. A cover letter of instructions should accompany the mailing of the application papers setting a deadline or a statement that no response will constitute a refusal. This sort of ultimatum lends support to a finding of refusal by conduct. **The proof of the pertinent events should be made by a statement of someone with firsthand knowledge of the events and should include documentary evidence, such as certified mail return receipt, cover letter of instructions, telegram, etc.** *See* MPEP 409.03(d).

Where there is an express or oral refusal, that fact, along with the time and place of the refusal, must be stated in an affidavit or declaration **by the party to whom the refusal was made.** Where there is a written refusal, a copy of the document(s) evidencing that refusal must be made part of the affidavit or declaration.

When it is concluded by the rule 47 applicant that an omitted inventor's conduct constitutes a refusal, all facts upon which that conclusion is based should be stated in an affidavit or declaration. If there is documentary evidence to support facts alleged in the affidavit or declaration, such evidence must be submitted.

Whenever an omitted inventor gives a reason for refusing to sign the application oath or declaration, that reason should be stated in the affidavit or declaration.

If it is discovered that inventor Searle no longer resides at the address the application papers were left, petitioner must establish diligent efforts were used to locate the inventor.

Further correspondence with respect to this matter should be addressed as follows:

By mail: Mail Stop PETITIONS
Commissioner for Patents
Post Office Box 1450
Alexandria, VA 22313-1450

By hand: Customer Service Window
Mail Stop Petitions
Randolph Building
401 Dulany Street
Alexandria, VA 22314

By fax: (571) 273-8300
ATTN: Office of Petitions

Telephone inquiries should be directed to the undersigned at (571) 272-3215.

Charlema Grant

Charlema Grant
Petitions Attorney
Office of Petitions

UNITED STATES PATENT AND TRADEMARK OFFICE

Commissioner for Patents
United States Patent and Trademark Office
P.O. Box 1450
Alexandria, VA 22313-1450
www.uspto.gov

COPY MAILED

MAY 22 2009

OFFICE OF PETITIONS

LOUIS WOO
LAW OFFICE OF LOUIS WOO
717 NORTH FAYETTE STREET
ALEXANDRIA VA 22314

In re Application of	:	
Francis L Ross III and Gary Searle	:	DECISION GRANTING STATUS
Application No. 12/379,756	:	UNDER 37 CFR 1.47(a)
Filed: February 27, 2008	:	
Attorney Docket No. 0107/0058	:	

This is in response to the renewed petition under 37 CFR 1.47(a), filed March 31, 2009.

The petition is **GRANTED.**

Petitioner has shown that the non-signing inventor Searle has refused to join in the filing of the above-identified application.

The application and papers have been reviewed and found in compliance with 37 CFR 1.47(a). This application is hereby accorded Rule 1.47(a) status.

As provided in 37 CFR 1.47(c), this Office will forward notice of this application's filing to the non-signing inventor at the address given in the petition. Notice of the filing of this application will also be published in the Official Gazette.

This application is being referred to the Office of Patent Application Processing for pre-examination processing.

Telephone inquiries regarding this decision should be directed to the undersigned at (571) 272-3215.

Charlema Grant
Petitions Attorney
Office of Petitions

UNITED STATES PATENT AND TRADEMARK OFFICE

Commissioner for Patents
United States Patent and Trademark Office
P.O. Box 1450
Alexandria, VA 22313-1450
www.uspto.gov

COPY MAILED

MAY 22 2009

OFFICE OF PETITIONS

Gary Searle
24 Barnstable Road
Norfolk, MA 02056

In re Application of
Francis L Ross III and Gary Searle
Application No. 12/379,756
Filed: February 27, 2008
Attorney Docket No. 0107/0058
For: Patient Heat Transfer Device

Dear Mr. Searle:

You are named as a co-inventor in the above-identified United States patent application, filed under the provisions of 35 U.S.C. 116 (United States Code), and 37 CFR 1.47(a), Rules of Practice in Patent Cases. Should a patent be granted on the application you will be designated therein as a co-inventor.

As a named inventor you are entitled to inspect any paper in the file wrapper of the application, order copies of all or any part thereof (at a prepaid cost per 37 CFR 1.19) or make your position of record in the application. Alternatively, you may arrange to do any of the preceding through a registered patent attorney or agent presenting written authorization from you. If you care to join the application, counsel of record (see below) would presumably assist you. Joining the application would entail the filing of an appropriate oath or declaration by you pursuant to 37 CFR 1.63.

Telephone inquiries regarding this communication should be directed to the undersigned at (571) 272-3215. Requests for information regarding your application should be directed to the File Information Unit at (703) 308-2733. Information regarding how to pay for and order a copy of the application, or a specific paper in the application, should be directed to the Certification Division at (571) 272-3150 or 1 (800) 972-6382 (outside the Washington, DC area).

Charlema Grant
Petitions Attorney
Office of Petitions

Cc: LOUIS WOO
LAW OFFICE OF LOUIS WOO
717 NORTH FAYETTE STREET
ALEXANDRIA VA 22314

UNITED STATES PATENT AND TRADEMARK OFFICE

Commissioner for Patents
United States Patent and Trademark Office
P.O. Box 1450
Alexandria, VA 22313-1450
www.uspto.gov

LITMAN LAW OFFICES, LTD.
POST OFFICE BOX 15035
CRYSTAL CITY STATION
ARLINGTON VA 22215-0035

COPY MAILED

MAY 22 2009

OFFICE OF PETITIONS

In re Application of	:	
David Ionis et al.	:	
Application No. 12/379,769	:	DECISION ON PETITION
Filed: February 27, 2009	:	TO MAKE SPECIAL UNDER
Attorney Docket No. 31163.00	:	37 CFR 1.102(c)(1)
	:	

This is a decision on the petition under 37 CFR 1.102(c)(1), filed February 27, 2009, to make the above-identified application special based on applicant's age as set forth in M.P.E.P. § 708.02, Section IV.

The petition is **GRANTED**.

A grantable petition to make an application special under 37 CFR 1.102(c)(1) and MPEP § 708.02, Section IV: Applicant's Age must be accompanied by evidence showing that at least one of the applicants is 65 years of age, or more, such as a birth certificate or a statement by applicant. No fee is required

The instant petition includes a statement by the applicant. Accordingly, the above-identified application has been accorded "special" status.

Telephone inquiries concerning this decision should be directed to JoAnne Burke at 571-272-4584.

All other inquiries concerning either the examination or status of the application should be directed to the Technology Center.

The application is being forwarded to the Technology Center Art Unit 3732 for action on the merits commensurate with this decision.

Ramesh Krishnamurthy

Ramesh Krishnamurthy
Petitions Examiner
Office of Petitions

UNITED STATES PATENT AND TRADEMARK OFFICE

Commissioner for Patents
United States Patent and Trademark Office
P.O. Box 1450
Alexandria, VA 22313-1450
www.uspto.gov

MAIL

APR 22 2009
DIRECTOR'S OFFICE
TECHNOLOGY CENTER 2600

HARNESS, DICKEY & PIERCE, P.L.C.
P.O. BOX 8910
RESTON VA 20195

In re Application of
SOH, YOON SEONG et al.
Application No. 12/379,848
Filed: March 03, 2009
Attorney Docket No. 6111-000003/US/CODD

DECISION ON REQUEST TO PARTICIPATE IN PATENT PROSECUTION HIGHWAY PROGRAM AND PETITION TO MAKE SPECIAL UNDER 37 CFR 1.102(d)

This is a decision on the request to participate in the Patent Prosecution Highway (PPH) program and the petition under 37 CFR 1.102(d), filed April 15, 2009, to make the above-identified application special.

The request and petition are **DISMISSED**.

A grantable request to participate in the PPH program and petition to make special require:

(1) The U.S. application must validly claim priority under 35 U.S.C. 119(a) to one or more applications filed in the KIPO;
(2) Applicant must submit a copy of the allowable/patentable claim(s) from the KIPO application(s) along with an English translation thereof and a statement that the English translation is accurate;
(3) All the claims in the U.S. application must sufficiently correspond or be amended to sufficiently correspond to the allowable/patentable claim(s) in the KIPO application(s);
(4) Examination of the U.S. application has not begun;
(5) Applicant must submit a copy of all the office actions from each of the KIPO application(s) containing the allowable/patentable claim(s) along with an English translation thereof and a statement that the English translation is accurate;
(6) Applicant must submit an IDS listing the documents cited by the KIPO examiner in the KIPO office action along with copies of documents except U.S. patents or U.S. patent application publications; and
(7) The required petition fee under 37 CFR 1.17(h).

The request to participate in the PPH program and petition is deficient as follows:

Petitioner has not complied with items 6 above in that petitioner states an information disclosure statement listing the documents cited in the KIPO office actions and copies of all documents

(except for U.S. patents or U.S. patent publications) have been filed in the above identified US application on March 03, 2007. However, a review of the file record reveals an information disclosure statement was filed, but there were no copies of documents, listed in the information disclosure statement, filed in the above noted US application on March 03, 2007.

Applicant is given a time period of **ONE MONTH or THIRTY DAYS**, whichever is longer, from the mailing date of this decision to correct the deficiencies. **NO EXTENSION OF TIME UNDER 37 CFR 1.136 IS PERMITTED.** If the deficiencies are not corrected with the time period given, the application will await action in its regular turn.

Any response must be submitted via EFS-web.

Telephone inquiries concerning this decision should be directed to Michael Horabik at 571-272-3068.

All other inquiries concerning the examination or status of the application should be directed to Patent Application Information Retrieval (PAIR) system.

Michael Horabik
Quality Assurance Specialist
Technology Center 2600
Communications

UNITED STATES PATENT AND TRADEMARK OFFICE

Commissioner for Patents
United States Patent and Trademark Office
P.O. Box 1450
Alexandria, VA 22313-1450
www.uspto.gov

MAIL

JUN 0 2 2009

DIRECTOR'S OFFICE
TECHNOLOGY CENTER 2600

HARNESS, DICKEY & PIERCE, P.L.C.
P.O. BOX 8910
RESTON VA 20195

In re Application of	:	
SOH, YOON SEONG et al	:	DECISION ON REQUEST TO
Application No. 12/379,848	:	PARTICIPATE IN PATENT
Filed: March 03, 2009	:	PROSECUTION HIGHWAY
Attorney Docket No. 6111-000003/US/CODD	:	PILOT PROGRAM AND PETITION
	:	TO MAKE SPECIAL UNDER
	:	37 CFR 1.102(d)

This is a decision on the request to participate in the Patent Prosecution Highway (PPH) pilot program and the petition under 37 CFR 1.102(d), filed May 08, 2009, to make the above-identified application special.

The request and petition are **GRANTED**.

A grantable request to participate in the PPH pilot program and petition to make special require:

(1) The U.S. application must validly claim priority under 35 U.S.C. 119(a) to one or more applications filed in the KIPO;
(2) Applicant must submit a copy of the allowable/patentable claim(s) from the KIPO application(s) along with an English translation thereof and a statement that the English translation is accurate;
(3) All the claims in the U.S. application must sufficiently correspond or be amended to sufficiently correspond to the allowable/patentable claim(s) in the KIPO application(s);
(4) Examination of the U.S. application has not begun;
(5) Applicant must submit a copy of all the office actions from each of the KIPO application(s) containing the allowable/patentable claim(s) along with an English translation thereof and a statement that the English translation is accurate;
(6) Applicant must submit an IDS listing the documents cited by the KIPO examiner in the KIPO office action along with copies of documents except U.S. patents or U.S. patent application publications; and
(7) The required petition fee under 37 CFR 1.17(h).

The request to participate in the PPH pilot program and petition comply with the above requirements. Accordingly, the above-identified application has been accorded "special" status.

Telephone inquiries concerning this decision should be directed to Michael Horabik at 571-272-3068.

All other inquiries concerning the examination or status of the application should be directed to Patent Application Information Retrieval (PAIR) system.

The application is being forwarded to the examiner for action on the merits commensurate with this decision.

Michael Horabik
Quality Assurance Specialist
Technology Center 2600
Communications

UNITED STATES PATENT AND TRADEMARK OFFICE

Commissioner for Patents
United States Patent and Trademark Office
P.O. Box 1450
Alexandria, VA 22313-1450
www.uspto.gov

OLIFF & BERRIDGE, PLC
P.O. BOX 320850
ALEXANDRIA, VA 22320-4850

MAILED

JUL 06 2010

OFFICE OF PETITIONS

In re Application of
Makoto ISHII, et *al.*
Application No. 12/379,863
Filed: March 3, 2009
Attorney Docket No. **120981.01**

DECISION GRANTING PETITION
UNDER 37 CFR 1.313(c)(2)

This is a decision on the petition under 37 CFR 1.313(c)(2), filed July 2, 2010, to withdraw the above-identified application from issue after payment of the issue fee.

The petition is **GRANTED**.

The above-identified application is withdrawn from issue for consideration of a submission under 37 CFR 1.114 (request for continued examination). *See* 37 CFR 1.313(c)(2).

Petitioner is advised that the issue fee paid on June 10, 2010 cannot be refunded. If, however, this application is again allowed, petitioner may request that it be applied towards the issue fee required by the new Notice of Allowance.[1]

Telephone inquiries should be directed to the undersigned at (571) 272-7253.

This application is being referred to Technology Center AU 2852 for processing of the request for continued examination under 37 CFR 1.114 and for consideration of the concurrently filed information disclosure statement.

/Monica A. Graves/
Petitions Examiner, Office of Petitions

---

[1] *The request to apply the issue fee to the new Notice may be satisfied by completing and returning the new Part B – Fee(s) Transmittal Form (along with any balance due at the time of submission). Petitioner is advised that the Issue Fee Transmittal Form* ***must*** *be completed and timely submitted to avoid abandonment of the application.*

UNITED STATES PATENT AND TRADEMARK OFFICE

Commissioner for Patents
United States Patent and Trademark Office
P.O. Box 1450
Alexandria, VA 22313-1450
www.uspto.gov

Litman Law Offices, Ltd.
Post Office Box 15035
Crystal City Station
Arlington, VA 22215-0035

COPY MAILED

MAR 3 1 2009

OFFICE OF PETITIONS

In re Application of	:	
David Ionis et al.	:	
Application No. 12/379,963	:	DECISION ON PETITION
Filed: March 5, 2009	:	TO MAKE SPECIAL UNDER
Attorney Docket No. 31163.01	:	37 CFR 1.102(c)(1)
	:	

This is a decision on the petition under 37 CFR 1.102(c)(1), filed March 5, 2009, to make the above-identified application special based on applicant's age as set forth in M.P.E.P. § 708.02, Section IV.

The petition is **GRANTED**.

A grantable petition to make an application special under 37 CFR 1.102(c)(1) and MPEP § 708.02, Section IV: Applicant's Age must be accompanied by evidence showing that at least one of the applicants is 65 years of age, or more, such as a birth certificate or a statement by applicant. No fee is required

The instant petition includes a declaration by the applicant. Accordingly, the above-identified application has been accorded "special" status.

Telephone inquiries concerning this decision should be directed to Kimberly Inabinet at 571-272-4618.

All other inquiries concerning either the examination or status of the application should be directed to the Technology Center at 571-272-4000.

Upon completion of the pre-examination processing by the Office of Patent Application Processing, this application will be referred to Technology Center Art Unit 3732 for action on the merits commensurate with this decision.

Kimberly Inabinet

Kimberly Inabinet
Petitions Examiner
Office of Petitions

UNITED STATES PATENT AND TRADEMARK OFFICE

UNITED STATES DEPARTMENT OF COMMERCE
United States Patent and Trademark Office
Address: COMMISSIONER FOR PATENTS
P.O. Box 1450
Alexandria, Virginia 22313-1450
www.uspto.gov

APPLICATION NO.	FILING DATE	FIRST NAMED INVENTOR	ATTORNEY DOCKET NO.	CONFIRMATION NO.
12/379,988	03/05/2009	Satoshi Kamiya	2001-40081 US-131	1751

7590 05/18/2010
MCGINN INTELLECTUAL PROPERTY LAW GROUP, PLLC
8321 OLD COURTHOUSE ROAD
SUITE 200
VIENNA, VA 22182-3817

EXAMINER	
ART UNIT	PAPER NUMBER
2465	
MAIL DATE	DELIVERY MODE
05/18/2010	PAPER

DECISION GRANTING PETITION UNDER 37 CFR 1.138(d)

The declaration of express abandonment is recognized

This is in response to the petition under 37 CFR 1.138(d), requesting for a refund of any previously paid search fee and excess claims fee in the above-identified application.

The petition is granted.

The express abandonment is recognized. Any previously paid search fee and excess claims fee are hereby refunded.

Telephone inquiries should be directed to the Office of Data Management at (571) 272-4200.

Patent Publication Branch
Office of Data Management

Adjustment date: 05/18/2010 NFARMER
03/06/2009 DEMMANJ1 00000039 12379988
02 FC:1111 -540.00 OP

FORM PET651G (Rev. 08/07)

UNITED STATES PATENT AND TRADEMARK OFFICE

Commissioner for Patents
United States Patent and Trademark Office
P.O. Box 1450
Alexandria, VA 22313-1450
www.uspto.gov

CURTIS ROBERT HOUGH
2490 VIEJO DRIVE
LAKE HAVASU CITY AZ 86406

MAILED

MAR 30 2009

OFFICE OF PETITIONS

In re Application of	:	
HOUGH, Curtis R.	:	
Application No. 12/380,030	:	DECISION ON PETITION
Filed: February 24, 2009	:	TO MAKE SPECIAL UNDER
Attorney Docket No.	:	37 CFR 1.102(c)(1)
	:	

This is a decision on the renewed petition under 37 CFR 1.102(c)(1), filed February 24, 2009, to make the above-identified application special based on applicant's age as set forth in M.P.E.P. § 708.02, Section IV.

The petition is **GRANTED**.

A grantable petition to make an application special under 37 CFR 1.102(c)(1) and MPEP § 708.02, Section IV: Applicant's Age must be accompanied by evidence showing that at least one of the applicants is 65 years of age, or more, such as a birth certificate or a statement by applicant. No fee is required

The instant petition includes a copy of the inventor's birth certificate as evidence that Curtis Robert Hugh is over 65 years of age. Accordingly, the above-identified application has been accorded "special" status.

Telephone inquiries concerning this decision should be directed to Michelle R. Eason at 571-272-4231.

All other inquiries concerning either the examination or status of the application should be directed to the Technology Center.

This application is being referred to the Office of Patent Application Processing. This application will be accorded "special" status when pre-examination processing is done.

Michelle R. Eason
Paralegal Specialist
Office of Petitions

UNITED STATES PATENT AND TRADEMARK OFFICE

Commissioner for Patents
United States Patent and Trademark Office
P.O. Box 1450
Alexandria, VA 22313-1450
www.uspto.gov

In re Application of
Robert Abrams

Application No. 12380135

Filed: February 24,2009

Attorney Docket No. 290205 Abrams Serrated CI

:DECISION ON PETITION TO MAKE SPECIAL
:UNDER 37 CFR 1.102(c)(1)

This is a decision on the electronic petition under 37 CFR 1.102 (c)(1), filed 11-JUN-2010 to make the above-identified application special based on applicant's age as set forth in MPEP § 708.02, Section IV.

The petition is **GRANTED**.

A grantable petition to make an application special under 37 CFR 1.102(c)(1), MPEP § 708.02, Section IV: Applicant's Age must include a statement by applicant or a registered practitioner having evidence that applicant is at least 65 years of age. No fee is required.

Accordingly, the above-identified application has been accorded "special" status and will be taken up for action by the examiner upon the completion of all pre-examination processing.

Telephone inquiries concerning this electronic decision should be directed to the Electronic Business Center at 866-217-9197.

All other inquiries concerning either the examination or status of the application should be directed to the Technology Center.

UNITED STATES PATENT AND TRADEMARK OFFICE

Commissioner for Patents
United States Patent and Trademark Office
P.O. Box 1450
Alexandria, VA 22313-1450
www.uspto.gov

COPY MAILED

JAN 11 2010

KNOBBE MARTENS OLSON & BEAR LLP
2040 MAIN STREET
FOURTEENTH FLOOR
IRVINE CA 92614

In re Application of	:	
Wun-Wei Hu et al.	:	
Application No. 12/380,178	:	NOTICE
Filed: February 23, 2009	:	
Attorney Docket No. SAINT88.002AUS	:	

This is a notice regarding your request for acceptance of a fee deficiency submission under 37 CFR 1.28 filed August 28, 2009. On September 1, 1998, the Court of Appeals for the Federal Circuit held that 37 CFR 1.28(c) is the sole provision governing the time for correction of the erroneous payment of the issue fee as a small entity. **See DH Technology v. Synergystex International, Inc. 154 F.3d 1333, 47 USPQ2d 1865 (Fed. Cir. Sept. 1, 1998).**

The Office no longer investigates or rejects original or reissue applications under 37 CFR 1.56. **1098 Off. Gaz. Pat. Office 502 (January 3, 1989)**. Therefore, nothing in this Notice is intended to imply that an investigation was done.

Your fee deficiency submission under 37 CFR 1.28 is hereby **NOT ACCPETED.**

The fee deficiency cannot be accepted because the itemization is not correct. This application was filed on February 23, 2009. The itemization listed on the petition lists the dates earlier than the filing date. Ensure that the dates the fees were paid and the amounts are accurate.

Further correspondence with respect to this matter should be addressed as follows:

By mail: Mail Stop PETITIONS
Commissioner for Patents
Post Office Box 1450
Alexandria, VA 22313-1450

By hand: Customer Service Window
Mail Stop Petitions
Randolph Building
401 Dulany Street
Alexandria, VA 22314

By fax: (571) 273-8300
ATTN: Office of Petitions

Telephone inquiries related to this decision should be directed to the Kimberly Inabinet at (571) 272-4618.

Carl Friedman
Petitions Examiner
Office of Petitions

UNITED STATES PATENT AND TRADEMARK OFFICE

Commissioner for Patents
United States Patent and Trademark Office
P.O. Box 1450
Alexandria, VA 22313-1450
www.uspto.gov

Knobbe, Martens, Olson & Bear, LLP
2040 Main Street
Fourteenth Floor
Irvine, CA 92614

MAILED

MAR 2 6 2010

OFFICE OF PETITIONS

In re Application:	:	
Wun-Wei Hu et al.	:	
Application No. 12/380,178	:	NOTICE
Filed: February 23, 2009	:	
Attorney Docket No. SAINT88.002AUS	:	

This is a notice regarding your renewed request for acceptance of a fee deficiency submission under 37 CFR 1.28 filed January 19, 2010. On September 1, 1998, the Court of Appeals for the Federal Circuit held that 37 CFR 1.28(c) is the sole provision governing the time for correction of the erroneous payment of the issue fee as a small entity. **See DH Technology v. Synergystex International, Inc. 154 F.3d 1333, 47 USPQ2d 1865 (Fed. Cir. Sept. 1, 1998).**

The Office no longer investigates or rejects original or reissue applications under 37 CFR 1.56. **1098 Off. Gaz. Pat. Office 502 (January 3, 1989)**. Therefore, nothing in this Notice is intended to imply that an investigation was done.

Your fee deficiency submission under 37 CFR 1.28 is hereby accepted. The petition is **GRANTED**.

This application is no longer entitled to small entity status. Accordingly, all future fees paid in this application must be paid at the large entity rate.

This file is being forwarded to Files Repository.

Telephone inquiries related to this decision should be directed to the Kimberly Inabinet at (571) 272-4618.

/Kimberly Inabinet/

Kimberly Inabinet
Petitions Examiner
Office of Petitions

UNITED STATES PATENT AND TRADEMARK OFFICE

UNITED STATES DEPARTMENT OF COMMERCE
United States Patent and Trademark Office
Address: COMMISSIONER FOR PATENTS
P.O. Box 1450
Alexandria, Virginia 22313-1450
www.uspto.gov

APPLICATION NO.	FILING DATE	FIRST NAMED INVENTOR	ATTORNEY DOCKET NO.	CONFIRMATION NO.
12/380,275	02/25/2009	Shuji Matsunoo	4041K-000437/US	2085

7590 11/19/2009
HARNESS, DICKEY & PIERCE, P.L.C.
P.O. BOX 828
BLOOMFIELD HILLS, MI 48303

EXAMINER
KOONTZ, TAMMY J

ART UNIT	PAPER NUMBER
3974	

MAIL DATE	DELIVERY MODE
11/19/2009	PAPER

DECISION GRANTING PETITION UNDER 37 CFR 1.138(d)

The declaration of express abandonment is recognized

This is in response to the petition under 37 CFR 1.138(d), requesting for a refund of any previously paid search fee and excess claims fee in the above-identified application.

The petition is granted.

The express abandonment is recognized. Any previously paid search fee and excess claims fee are hereby refunded.

Telephone inquiries should be directed to the Office of Data Management at (571) 272-4200.

Betty Powell
Patent Publication Branch
Office of Data Management

FORM PET651G (Rev. 08/07)

UNITED STATES PATENT AND TRADEMARK OFFICE

Commissioner for Patents
United States Patent and Trademark Office
P.O. Box 1450
Alexandria, VA 22313-1450
www.uspto.gov

MARY ELIZABETH BUSH
QUALLION LLC
P.O. BOX 923127
SYLMAR CA 91392-312

COPY MAILED

AUG 2 8 2009

OFFICE OF PETITIONS

In re Application of	:	
Tsukamoto, Hisashi	:	
Application No. 12/380,345	:	DECISION ON PETITION
Filed: February 25, 2009	:	UNDER 37 CFR 1.137(b)
Attorney Docket No. Q278-US1	:	

This is a decision on the petition, filed July 1, 2009, which is being treated as a petition under 37 CFR 1.137(b) to revive the instant nonprovisional application for failure to timely notify the U.S. Patent and Trademark (USPTO) of the filing of an application in a foreign country, or under a multinational treaty that requires publication of applications eighteen months after filing. *See* 37 CFR 1.137(f).

The petition is **GRANTED**.

Petitioner states that the instant nonprovisional application is the subject of an application filed in an eighteen-month publication country on February 27, 2009. However, the USPTO was unintentionally not notified of this filing within 45 days subsequent to the filing of the subject application in an eighteen-month publication country.

In view of the above, this application became abandoned pursuant to 35 U.S.C. § 122(b)(2)(B)(iii) and 37 CFR 1.213(c) for failure to timely notify the Office of the filing of an application in a foreign country or under a multilateral international agreement that requires publication of applications 18 months after filing.

A petition to revive an application abandoned pursuant to 35 U.S.C. 122(b)(2)(B)(iii) for failure to notify the USPTO of a foreign filing must be accompanied by:

(1) the required reply which is met by the notification of such filing in a foreign country or under a multinational treaty;
(2) the petition fee as set forth in 37 CFR 1.17(m); and
(3) a statement that the entire delay in filing the required reply from the due date of the reply until the filing of a grantable petition was unintentional.

The instant petition has been found to be in compliance with 37 CFR 1.137(b). Accordingly, the failure to timely notify the USPTO of a foreign or international filing within 45 days after the date of filing of such foreign or international application as provided by 35 U.S.C. § 122(b)(2)(B)(iii) and 37 CFR 1.213(c) is accepted as having been unintentionally delayed.

The previous Request and Certification under 35 U.S.C. § 122(b)(2)(B)(i) has been rescinded. A Notice Regarding Rescission of Nonpublication Request, which sets forth the projected publication date of November 12, 2009, accompanies this decision on petition.

Telephone inquiries concerning this decision should be directed to the undersigned at (571) 272-3206.

This matter is being referred to Technology Center Art Unit 1795 for examination in due course.

Liana Walsh
Petitions Examiner
Office of Petitions

ATTACHMENT: Notice Regarding Rescission of Nonpublication Request

UNITED STATES PATENT AND TRADEMARK OFFICE

UNITED STATES DEPARTMENT OF COMMERCE
United States Patent and Trademark Office
Address: COMMISSIONER FOR PATENTS
P.O. Box 1450
Alexandria, Virginia 22313-1450
www.uspto.gov

APPLICATION NUMBER	FILING OR 371(C) DATE	FIRST NAMED APPLICANT	ATTY. DOCKET NO./TITLE
12/380,345	02/25/2009	Hisashi Tsukamoto	Q278-US1

CONFIRMATION NO. 4577

31815
MARY ELIZABETH BUSH
QUALLION LLC
P.O. BOX 923127
SYLMAR, CA 91392-3127

NONPUBLICATION RESCISSION LETTER

OC000000037253372

Date Mailed: 08/06/2009

Communication Regarding Rescission Of Nonpublication Request and/or Notice of Foreign Filing

Applicant's rescission of the previously-filed nonpublication request and/or notice of foreign filing is acknowledged. The paper has been reflected in the Patent and Trademark Office's (USPTO's) computer records so that the earliest possible projected publication date can be assigned.

The projected publication date is 11/12/2009.

If applicant rescinded the nonpublication request before or on the date of "foreign filing,"[1] then no notice of foreign filing is required.

If applicant foreign filed the application after filing the above application and before filing the rescission, and the rescission did not also include a notice of foreign filing, then a notice of foreign filing (not merely a rescission) is required to be filed within 45 days of the date of foreign filing. See 35 U.S.C. § 122(b)(2)(B)(iii), and Clarification of the United States Patent and Trademark Office's Interpretation of the Provisions of 35 U.S.C. § 122(b)(2)(B)(ii)-(iv), 1272 Off. Gaz. Pat. Office 22 (July 1, 2003).

If a notice of foreign filing is required and is not filed within 45 days of the date of foreign filing, then the application becomes abandoned pursuant to 35 U.S.C. § 122(b)(2)(B)(iii). In this situation, applicant should either file a petition to revive or notify the Office that the application is abandoned. See 37 CFR 1.137(f). Any such petition to revive will be forwarded to the Office of Petitions for a decision. Note that the filing of the petition will not operate to stay any period of reply that may be running against the application.

Questions regarding petitions to revive should be directed to the Office of Petitions at (571) 272-3282.

[1] Note, for purpose of this notice, that "foreign filing" means "filing an application directed to the same invention in another country, or under a multilateral international agreement, that requires publication of applications 18 months after filing".

/lswalsh/

Office of Data Management, Application Assistance Unit (571) 272-4000, or (571) 272-4200, or 1-888-786-0101

UNITED STATES PATENT AND TRADEMARK OFFICE

Commissioner for Patents
United States Patent and Trademark Office
P.O. Box 1450
Alexandria, VA 22313-1450
www.uspto.gov

WOODSIDE IP GROUP
P.O. BOX 61047
PALO ALTO, CA 94306

COPY MAILED
MAR 04 2010

In re Application of
Kenneth R. Broome
Application No. 12/380,411
Filed: February 26, 2009
Attorney Docket No. KB 2

DECISION ON PETITION
TO WITHDRAW
FROM RECORD

This is a decision on the Request to Withdraw as attorney or agent of record under 37 C.F.R. § 1.36(b), filed December 24, 2009.

The request is **APPROVED**.

A grantable request to withdraw as attorney/agent of record must be signed by every attorney/agent seeking to withdraw or contain a clear indication that one attorney is signing on behalf of another/others.

The request was signed by Michael Hetherington on behalf of all attorneys of record who are associated with customer No. 36743. All attorneys/agents associated with the Customer Number 36743 have been withdrawn. Applicant is reminded that there is no attorney of record at this time.

The correspondence address of record has been changed and the new correspondence address is the address indicated below.

There are no pending Office actions at the present time.

Telephone inquiries concerning this decision should be directed to undersigned at 571-272-1642. All other inquiries concerning the examination or status of this application should be directed to the Technology Center.

/AMW/
April M. Wise
Petitions Examiner
Office of Petitions

cc: KENNETH R. BROOME
100 ROCKY CREEK ROAD
WOODSIDE, CA 94062

UNITED STATES PATENT AND TRADEMARK OFFICE

UNITED STATES DEPARTMENT OF COMMERCE
United States Patent and Trademark Office
Address: COMMISSIONER FOR PATENTS
P.O. Box 1450
Alexandria, Virginia 22313-1450
www.uspto.gov

APPLICATION NUMBER	FILING OR 371(C) DATE	FIRST NAMED APPLICANT	ATTY. DOCKET NO./TITLE
12/380,411	02/26/2009	Kenneth R. Broome	KB 2

CONFIRMATION NO. 8879

POWER OF ATTORNEY NOTICE

36743
WOODSIDE IP GROUP
P.O. BOX 61047
PALO ALTO, CA 94306

OC000000040312415

Date Mailed: 02/26/2010

NOTICE REGARDING CHANGE OF POWER OF ATTORNEY

This is in response to the Power of Attorney filed 12/24/2009.

- The withdrawal as attorney in this application has been accepted. Future correspondence will be mailed to the new address of record. 37 CFR 1.33.

/amwise/

Office of Data Management, Application Assistance Unit (571) 272-4000, or (571) 272-4200, or 1-888-786-0101

UNITED STATES PATENT AND TRADEMARK OFFICE

Commissioner for Patents
United States Patent and Trademark Office
P.O. Box 1450
Alexandria, VA 22313-1450
www.uspto.gov

Kenneth Watov, Esq.
WATOV & KIPNES, P.C.
P.O. Box 247
Princeton Junction NJ 08550

COPY MAILED

JUL 30 2009

OFFICE OF PETITIONS

In re Application of
Frank W. Sinden
Application No. 12/380,426
Filed: February 27, 2009
Attorney Docket No. 1360.1.001

DECISION ON PETITION
TO MAKE SPECIAL UNDER
37 CFR 1.102(c)(1)

This is a decision on the petition under 37 CFR 1.102(c)(1), filed May 21, 2009, to make the above-identified application special based on applicant's age as set forth in MPEP § 708.02, Section IV.

The petition is **GRANTED**.

A grantable petition to make an application special under 37 CFR 1.102(c)(1) and MPEP § 708.02, Section IV: Applicant's Age must be accompanied by evidence showing that at least one of the applicants is 65 years of age, or more, such as a birth certificate or a statement by applicant. No fee is required

The instant petition includes a statement by a registered attorney. Accordingly, the above-identified application has been accorded "special" status.

Telephone inquiries concerning this decision should be directed to JoAnne Burke at 571-272-4584.

All other inquiries concerning either the examination or status of the application should be directed to the Technology Center.

The application is being forwarded to the Technology Center Art Unit 3617 for action on the merits commensurate with this decision.

Ramesh Krishnamurthy

Ramesh Krishnamurthy
Petitions Examiner
Office of Petitions

UNITED STATES PATENT AND TRADEMARK OFFICE

Commissioner for Patents
United States Patent and Trademark Office
P.O. Box 1450
Alexandria, VA 22313-1450
www.uspto.gov

Mike S. Shimooka
700 E. Vista Way
Vista CA 92084

COPY MAILED

MAY 22 2009

OFFICE OF PETITIONS

In re Application of	:	
Mike Seiji shimooka	:	
Application No. 12/380,629	:	DECISION ON PETITION
Filed: February 27, 2009	:	TO MAKE SPECIAL UNDER
Attorney Docket No. Mike S. Shimooka	:	37 CFR 1.102(c)(1)
	:	

This is a decision on the petition under 37 CFR 1.102(c)(1), filed February 27, 2009, to make the above-identified application special based on applicant's age as set forth in M.P.E.P. § 708.02, Section IV.

The petition is **GRANTED**.

A grantable petition to make an application special under 37 CFR 1.102(c)(1) and MPEP § 708.02, Section IV: Applicant's Age must be accompanied by evidence showing that at least one of the applicants is 65 years of age, or more, such as a birth certificate or a statement by applicant. No fee is required

The instant petition includes a statement by the applicant. Accordingly, the above-identified application has been accorded "special" status.

Telephone inquiries concerning this decision should be directed to JoAnne Burke at 571-272-4584.

All other inquiries concerning either the examination or status of the application should be directed to the Technology Center.

The application is being forwarded to the Technology Center Art Unit 2121 for action on the merits commensurate with this decision.

Ramesh Krishnamurthy

Ramesh Krishnamurthy
Petitions Examiner
Office of Petitions

UNITED STATES PATENT AND TRADEMARK OFFICE

UNITED STATES DEPARTMENT OF COMMERCE
United States Patent and Trademark Office
Address: COMMISSIONER FOR PATENTS
P.O. Box 1450
Alexandria, Virginia 22313-1450
www.uspto.gov

APPLICATION NO.	FILING DATE	FIRST NAMED INVENTOR	ATTORNEY DOCKET NO.	CONFIRMATION NO.
12/380,633	03/02/2009	Varad N. Srivastava	2053534-5001	1704

7590 06/30/2010

Varad N. Srivastava
Ingenium Technologies Corporation
4216 Maray Drive
Rockford, IL 61107

EXAMINER
YU, JUSTINE ROMANG

ART UNIT	PAPER NUMBER
3771	

MAIL DATE	DELIVERY MODE
06/30/2010	PAPER

Please find below and/or attached an Office communication concerning this application or proceeding.

The time period for reply, if any, is set in the attached communication.

UNITED STATES PATENT AND TRADEMARK OFFICE

Commissioner for Patents
United States Patent and Trademark Office
P.O. Box 1450
Alexandria, VA 22313-1450
www.uspto.gov

Varad N. Srivastava
Ingenium Technologies Corporation
4216 Maray Drive
Rockford IL 61107

In re Application of	:	
SRIVASTAVA, VARAD N. et al	:	DECISION ON REQUEST TO
Application No. 12/380,633	:	PARTICIPATE IN PATENT
Filed: March 2, 2009	:	PCT/PROSECUTION HIGHWAY
Attorney Docket No. 2053534-5001	:	PROGRAM AND PETITION
For: BIOMETRIC AND LOW RESTRAINT CONTINUOUS PASSIVE MOTION REHABILITATION DEVICE	:	37 CFR 1.102(d)

This is a decision on the request to participate in the Patent Prosecution Highway (PPH) program and the petition under 37 CFR 1.102(d), filed June 28, 2010 to make the above-identified application special.

The request and petition are Dismissed.

A grantable request to participate in the PPH program and petition to make special require:
(1) The U.S. application must disclose an eligible relationship to one or more PCT applications filed in the KIPO, JPO, EPO or USPTO;
(2) Applicant must submit a copy of the allowable/patentable claim(s) from the PCT application(s) latest international work product (the written opinion or the IPER) along with an English translation thereof and a statement that the English translation is accurate;
(3) All the claims in the U.S. application must sufficiently correspond or be amended to sufficiently correspond to the allowable/patentable claim(s) in the PCT application(s);
(4) Examination of the U.S. application has not begun;
(5) Applicant must submit a copy of the latest international work product from the PCT application containing the allowable/patentable claim(s) along with an English translation thereof and a statement that the English translation is accurate; and
(6) Applicant must submit an IDS listing the documents cited by the PCT examiner in the international work product along with copies of documents except U.S. patents or U.S. patent application publications.

The request to participate in the PPH program and petition met all conditions except Item #6 above. The request to participate in the PPH program and petition fail to include a copy of the PCT/KIPO cited references, namely, JP 2001-295111 A published on 10/26/2001 and JP 05-48928 published on 6/29/1993. An IDS (Form 1499) listing all four prior art references cited in the International Search Report must be provided, if not previously filed.

Applicant is encouraged to cite and submit all relevant prior art references, if any, to facilitate examination in this application.

Applicant is given a time period of **ONE MONTH or THIRTY DAYS**, whichever is longer, from the mailing date of this decision to correct the deficiencies. **NO EXTENSION OF TIME UNDER 37 CFR 1.136 IS PERMITTED.** If the deficiencies are not corrected with the time period given, the application will await action in its regular turn. Response must be filed via EFS-Web.

Telephone inquiries concerning this decision should be directed to Henry C. Yuen at 571-272-4856.

Petition is **dismissed**.

/Henry C. Yuen/

Henry C. Yuen, Special Programs Examiner
Technology Center 3700 – Mechanical Engineering,
Manufacturing and Products
571-272-4856

03 APR 2009

UNITED STATES PATENT AND TRADEMARK OFFICE

Commissioner for Patents
United States Patent and Trademark Office
P.O. Box 1450
Alexandria, VA 22313-1450
www.uspto.gov

PAUL M. DENK
763 S. New Ballas Rd. Ste.170
St. Louis, MO 63141

In re Application of	:	
Wichern et al	:	
Application No.: 12/380,648	:	
PCT No.: PCT/US2006/037737	:	
Int. Filing Date: 28 September 2006	:	
Priority Date: 29 September 2005	:	
For: INTERNAL WHEEL SUSPENSION	:	PETITION UNDER 37 CFR 1.137(b)
SYSTEM WITH SHOCK ABSORPTION	:	

This decision is in response to applicants' "PETITION FOR REVIVAL OF AN INTERNATIONAL APPLICATION FOR PATENT DESIGNATING THE U.S. ABANDONED UNINTENTIONALLY UNDER 37 C.F.R. 137(b)" filed in the United States Patent and Trademark Office (USPTO) on 3/2/09.

BACKGROUND

The International application PCT/US2006/037737 became abandoned with respect to the United States of America at midnight on 31 March 2008 based on applicants' failure to pay the U.S. basic national fee prior to the expiration of thirty months from the priority date.

On 02 March 2009, applicants filed the present petition under 37 C.F.R 1.137(b) to revive the application. The Utility Patent Application Transmittal form, a copy of the international application and the utility application fee accompanied the petition.

DISCUSSION

A petition under 37 CFR 1.137(b) requesting that the application be revived the grounds of unintentional abandonment must be accompanied by (1) the required reply, (2) the petition fee required by law, (3) a statement that the "entire delay in filing the required reply from the due date for the reply until the filing of a grantable petition pursuant to this paragraph was unintentional" and (4) any terminal disclaimer and fee pursuant to 37 CFR 1.137(c) (where required).

Regarding item (1), applicants have not provided the required reply: The filing of Form PTO/SB/05 signifies an intent to file an application under 35 U.S.C. 111(a). See MPEP 1893.03(a). However, the relationship of the present application to international application PCT/US2006/037737 has not been properly set forth in the first line of the specification or in an application data sheet. The relationship is whether the present application is a continuation, continuation-in-part, or divisional of international application PCT/US2006/037737. See MPEP 201.11.

Regarding item (2), the $810 petition fee has been received.

Regarding item (3), the petition includes the requisite statement.

With regard to item (4), because the international application was filed after 08 June 1995, no terminal disclaimer is required.

CONCLUSION

For the reasons detailed above, applicants' petition under 37 CFR 1.137(b) is **DISMISSED**.

If reconsideration on the merits of the petition is desired, a proper response must be filed within TWO (2) MONTHS from the mail date of this decision. Any reconsideration request should include a cover letter entitled "Renewed Petition Under 37 CFR 1.137(b)". No additional petition fee is required.

Please direct further correspondence with respect to this matter to Mail Stop PCT, Commissioner for Patents, Office of PCT Legal Administration, P.O. Box 1450, Alexandria, Virginia 22313-1450, with the contents of the letter marked to attention of the Office of PCT Legal Administration.

Celine Qian
Examiner
Office of PCT Legal Administration
Tel: (571) 272-6094
Fax: (571) 273-0459

Bryan Lin
Bryan Lin
PCT Legal Examiner
Office of PCT Legal Administration

UNITED STATES PATENT AND TRADEMARK OFFICE

COMMISSIONER FOR PATENTS
UNITED STATES PATENT AND TRADEMARK OFFICE
P.O. BOX 1450
ALEXANDRIA, VA 22313-1450
www.uspto.gov

1 6 JUN 2009

PAUL M. DENK
763 S. NEW BALLAS RD. STE. 170
ST. LOUIS, MO 63141

In re Application of WICHERN	:	
U.S. Application No.: 12/380,648	:	
PCT Application No.: PCT/US2006/037737	:	
Int. Filing Date: 28 September 2006	:	DECISION
Priority Date Claimed: 29 September 2005	:	
Attorney Docket No.: 7954	:	
For: INTERNAL WHEEL SUSPENSION	:	
SYSTEM WITH A SLOTTED RIM	:	

This is in response to applicant's renewed petition under 37 CFR 1.137(b)" filed 29 April 2009.

BACKGROUND

On 28 September 2006, applicant filed international application PCT/US2006/037737, which claimed priority of an earlier United States application filed 29 September 2005. The thirty-month period for paying the basic national fee in the United States expired on 29 March 2008.

On 30 March 2008, international application PCT/US2006/037737 became abandoned as to the United States for failure to timely pay the basic national fee.

On 02 March 2009, applicant filed a petition under 37 CFR 1.137(b).

On 03 April 2009, this Office mailed a decision dismissing the 02 March 2009 petition.

On 24 April 2009, applicant filed the present renewed petition under 37 CFR 1.137(b).

DISCUSSION

Under 37 CFR 1.137(b), a petition requesting that an application be revived on the grounds of unintentional abandonment must be accompanied by: (1) the required reply unless previously filed, (2) the petition fee as set forth in 37 CFR 1.17(m), (3) a statement that the entire

delay in filing the required reply from the due date for the reply until the filing of a grantable petition was unintentional, and (4) a terminal disclaimer if the application was filed before 08 June 1995.

Applicant has previously satisfied items (2), (3), and (4) above.

With regard to item (1), applicant has not provided the required reply. The renewed petition states that the papers filed 02 March 2009 were intended as a U.S. national stage application under 35 U.S.C. 371. 37 CFR 1.495(g) states, "The documents and fees submitted under paragraphs (b) and (c) of this section must be clearly identified as a submission to enter the national stage under 35 U.S.C. 371. Otherwise, the submission will be considered as being made under 35 U.S.C. 111(a)." Furthermore, MPEP 1893.03(a) states in relevant part, "[I]f there are any conflicting instructions as to whether the filing is under 35 U.S.C. 111(a) or 35 U.S.C. 371, the application will be accepted as filed under 35 U.S.C. 111(a). A conflicting instruction will be present, for example, where applicant includes in the initial submission under 35 U.S.C. 371, a 'Utility Patent Application Transmittal' (Form PTO/SB/05) or includes a benefit claim under 35 U.S.C. 120 to the international application."

In the present case, the papers filed 02 March 2009 included a Utility Patent Application Transmittal (Form PTO/SB/05). Pursuant to MPEP 1893.03(a), the submission of Form PTO/SB/05 conflicts with any stated desire to enter the U.S. national stage under 35 U.S.C. 371. Accordingly, the application will be treated under 35 U.S.C. 111(a).

In order for the present application to claim priority to international application PCT/US2006/037737, international application PCT/US2006/037737 must be revived for the purposes of continuity. However, revival will not occur until the present application includes a proper priority claim to international application PCT/US2006/037737. 37 CFR 1.78(a)(2)(i) requires that any nonprovisional application claiming the benefit of one or more prior-filed copending nonprovisional applications must contain or be amended to contain a reference to each such prior-filed application, identifying it by application number (consisting of the series code and serial number) and indicating the relationship of the applications. The relationship between the applications is whether the subject application is a continuation, divisional, or continuation-in-part of a prior-filed nonprovisional application. An example of a proper benefit claim is: "This application is a continuation of international application number PCT/----/------, filed---." A benefit claim that merely states that the application "claims priority benefit from US application number 10/---, filed---," does not comply with 37 CFR 1.78(a)(2)(i) since the proper relationship, which includes the type of continuing application, is not stated. See MPEP Section 201.11, Rev. 5, August 2006, Reference to Prior Application(s).

The present application does not properly specify whether the present application is a continuation, divisional, or continuation-in-part of international application PCT/US2006/037737. This reference must be included in an amendment to the first sentence of the specification or be included in a properly signed supplemental application data sheet. See 37 CFR 1.78(a)(2)(iii). Applicant is advised that this reference must be submitted within four months of 02 March 2009, i.e. the actual filing date of the present application. See 37 CFR 1.78(a)(2)(ii). Failure to submit

the required reference within the time limit set forth in 37 CFR 1.78(a)(2)(ii) would necessitate the filing of a petition under 37 CFR 1.78(a)(3) along with the requisite $1,410.00 petition fee.[1]

CONCLUSION

For the reasons above, the renewed petition under 37 CFR 1.137(b) is DISMISSED without prejudice.

If reconsideration on the merits of the petition is desired, a proper response must be filed within TWO (2) MONTHS from the mail date of this decision. Extensions of time are available under 37 CFR 1.136(a). Any reconsideration request should include a cover letter entitled "Renewed Petition Under 37 CFR 1.137(b)". No additional petition fee is required.

Please direct further correspondence with respect to this matter to Mail Stop PCT, Commissioner for Patents, Office of PCT Legal Administration, P.O. Box 1450, Alexandria, Virginia 22313-1450, with the contents of the letter marked to the attention of the Office of PCT Legal Administration.

BryanLin

Bryan Lin
PCT Legal Examiner
PCT Legal Office

Telephone: 571-272-3303
Facsimile: 571-273-0459

[1] Applicant is advised that there is no small entity reduction for the fee for a petition under 37 CFR 1.78(a)(3).

UNITED STATES PATENT AND TRADEMARK OFFICE

Commissioner for Patents
United States Patent and Trademark Office
P.O. Box 1450
Alexandria, VA 22313-1450
www.uspto.gov

Nicholas Colucci
67 Bache Ave.
New York NY 10306

MAILED

JUN 17 2009

OFFICE OF PETITIONS

In re Application of
Nicholas Colucci
Application No. 12/380,667
Filed: March 3, 2009
Attorney Docket No.

DECISION ON PETITION
TO MAKE SPECIAL UNDER
37 CFR 1.102(c)(1)

This is a decision on the petition under 37 CFR 1.102(c)(1), filed March 30, 2009, to make the above-identified application special based on applicant's age as set forth in M.P.E.P. § 708.02, Section IV.

The petition is **GRANTED**.

A grantable petition to make an application special under 37 CFR 1.102(c)(1) and MPEP § 708.02, Section IV: Applicant's Age must be accompanied by evidence showing that at least one of the applicants is 65 years of age, or more, such as a birth certificate or a statement by applicant. No fee is required

The instant petition includes a statement by the applicant. Accordingly, the above-identified application has been accorded "special" status.

Telephone inquiries concerning this decision should be directed to JoAnne Burke at 571-272-4584.

All other inquiries concerning either the examination or status of the application should be directed to the Technology Center.

The application is being forwarded to the Office of Patent Application Processing for action on the merits commensurate with this decision.

Ramesh Krishnamurthy
Petitions Examiner
Office of Petitions

UNITED STATES PATENT AND TRADEMARK OFFICE

Commissioner for Patents
United States Patent and Trademark Office
P.O. Box 1450
Alexandria, VA 22313-1450
www.uspto.gov

DANIEL LUCH
17161 COPPER HILL DRIVE
MORGAN HILL CA 95037

MAILED

APR 21 2009

OFFICE OF PETITIONS

In re Application of	:	
Daniel LUCH	:	
Application No. 12/380,684	:	DECISION ON PETITION
Filed: March 02, 2009	:	TO MAKE SPECIAL UNDER
Attorney Docket No.	:	37 CFR 1.102(c)(1)
	:	

This is a decision on the petition under 37 CFR 1.102(c)(1), filed March 02, 2009, to make the above-identified application special based on applicant's age as set forth in M.P.E.P. § 708.02, Section IV.

The petition is **GRANTED**.

A grantable petition to make an application special under 37 CFR 1.102(c)(1) and MPEP § 708.02, Section IV: Applicant's Age must be accompanied by evidence showing that at least one of the applicants is 65 years of age, or more, such as a birth certificate or a statement by applicant. No fee is required

The instant petition includes the declaration and a driver license's of inventor Daniel Luch, attesting to his age. Accordingly, the above-identified application will be accorded "special" status.

Telephone inquiries concerning this decision should be directed to Tredelle Jackson at 571-272-2783.

All other inquiries concerning either the examination or status of the application should be directed to the Office of Patent Application Processing.

This application is being referred to the Office of Patent Application Processing for processing.
This application will be accorded "special" status when pre-examination processing is done.

Tredelle D. Jackson
Paralegal Specialist
Office of Petitions

UNITED STATES PATENT AND TRADEMARK OFFICE

UNITED STATES DEPARTMENT OF COMMERCE
United States Patent and Trademark Office
Address: COMMISSIONER FOR PATENTS
P.O. Box 1450
Alexandria, Virginia 22313-1450
www.uspto.gov

APPLICATION NO.	FILING DATE	FIRST NAMED INVENTOR	ATTORNEY DOCKET NO.	CONFIRMATION NO.
12/380,727	03/02/2009	Charles Huizenga	PA4788US	9600

22830 7590 02/22/2010
CARR & FERRELL LLP
2200 GENG ROAD
PALO ALTO, CA 94303

EXAMINER

ART UNIT	PAPER NUMBER
2821	

MAIL DATE	DELIVERY MODE
02/22/2010	PAPER

Please find below and/or attached an Office communication concerning this application or proceeding.

The time period for reply, if any, is set in the attached communication.

UNITED STATES PATENT AND TRADEMARK OFFICE

Commissioner for Patents
United States Patent and Trademark Office
P.O. Box 1450
Alexandria, VA 22313-1450
www.uspto.gov

CARR & FERRELL LLP
2200 GENG ROAD
PALO ALTO CA 94303

In re Application of	:	
HUIZENGA et al	:	DECISION ON PETITION
Application No. 12/380,727	:	TO MAKE SPECIAL UNDER
Filed: 02 March 2009	:	THE GREEN TECHNOLOGY
Attorney Docket No. PA4788US	:	PILOT PROGRAM

This is a decision on the petition under 37 CFR 1.102, filed 09 December 2009, to make the above-identified application special under the pilot program for applications pertaining to Green Technologies as set forth 74 Federal Register Notice 64666 (December 8, 2009).

The petition is **DISMISSED**.

If reconsideration of this decision is desired, a petition for reconsideration must be filed within ONE (1) MONTH OR THIRTY (30) DAYS from the mail date of this decision, whichever is longer. No extension of this time limit can be granted under 37 CFR 1.136(a) or (b). The petition for reconsideration should include an exhaustive attempt to provide the lacking item(s) noted below, since, after a decision on the petition for reconsideration, no further reconsideration or review of the matter will be undertaken by the Director.

A grantable petition to make an application special under 37 CFR 1.102 and the pilot program as set forth in 74 FR 64666 must be directed to a nonprovisional application filed under 35 USC 111(a) or be a national stage entry under 35 USC 371, exclusive of any reissue applications and be filed prior to the date of the notice, December 8, 2009.

In order to qualify for special status, the following requirements must be met. 1) The application must be classified in one of the eligible US classifications listed in section VI of the notice. 2) The application must have no more than 3 independent claims and no more than 20 total claims. 3) The application must not contain any multiple dependent claims. 4) The petition must state the basis for seeking special status, i.e., the claimed invention either: A) materially enhances the quality of the environment or B) materially contributes to: i) the discovery or development of renewable energy resources, ii) the more efficient utilization and conservation of energy resources, or iii) greenhouse gas emission reduction. 5) If the disclosure is not clear on its face that the claimed invention materially contributes under category (A) or (B), the petition must be accompanied by a statement by the applicant, assignee, or an attorney/agent registered to practice before the Office explaining how the materiality standard is met. 6) A statement that applicant will agree to make an election without traverse in a telephonic interview if a restriction requirement is made by the examiner. 7) The petition to make special must be filed

electronically. 8) The petition must be filed at least one day prior to the date that a first Office Action appears in the Patent Application Information Retrieval (PAIR) system. 9) The petition must be accompanied by a request for early publication in compliance with 37 CFR 1.219 and include the publication fee as set forth in 37 CFR 1.18(d).

The requirement for a fee for consideration of the petition to make special for applications pertaining to Green Technologies has been waived.

The petition lacks item 1 above.

In regard to item 1, petitioner should note that this application has been classified in an area (USPC 315/362.000) that is not one of the eligible US classifications listed in section VI of the notice. Therefore, this application is not eligible for the Pilot Program. The classification limitations are purposefully made to be narrow for the Pilot Program; however, these may be expanded based upon the success of the Pilot Program. Petitioner may file a preliminary amendment that would cause this application to be classified elsewhere. However, while petitioner may suggest a classification (see, e.g., MPEP 708.02(a)(VII)(C)), the application will be assigned to the most appropriate classification based upon current U.S. classification guidelines. Furthermore, a petition for the Pilot Program should not be filed until and unless all of the requirements set forth in the Notice are met; i.e., a petition should not be filed for an application that is currently classified outside the eligible classifications set forth in the Notice.

Any reconsideration of this decision should be submitted through the USPTO electronic filing system, EFS-Web, and selecting the document description of "Petition for Green Tech Pilot" on the EFS-Web screen.

Telephone inquires concerning this decision should be directed to Lee W. Young at 571-272-4549.

The application is being forwarded to the Technology Center Art Unit 2821 for action on the merits commensurate with this decision.

Lee W. Young
Quality Assurance Specialist
Technology Center 2800

UNITED STATES PATENT AND TRADEMARK OFFICE

UNITED STATES DEPARTMENT OF COMMERCE
United States Patent and Trademark Office
Address: COMMISSIONER FOR PATENTS
P.O. Box 1450
Alexandria, Virginia 22313-1450
www.uspto.gov

APPLICATION NO.	FILING DATE	FIRST NAMED INVENTOR	ATTORNEY DOCKET NO.	CONFIRMATION NO.
12/380,727	03/02/2009	Charles Huizenga	PA4788US	9600

22830 7590 06/02/2010
CARR & FERRELL LLP
2200 GENG ROAD
PALO ALTO, CA 94303

EXAMINER
PALADINI, ALBERT WILLIAM

ART UNIT	PAPER NUMBER
2836	

MAIL DATE	DELIVERY MODE
06/02/2010	PAPER

Please find below and/or attached an Office communication concerning this application or proceeding.

The time period for reply, if any, is set in the attached communication.

UNITED STATES PATENT AND TRADEMARK OFFICE

Commissioner for Patents
United States Patent and Trademark Office
P.O. Box 1450
Alexandria, VA 22313-1450
www.uspto.gov

CARR & FERRELL LLP
2200 GENG ROAD
PALO ALTO CA 94303

In re Application of	:	
HUIZENGA et al.	:	DECISION ON PETITION
Application No. 12/380,727	:	TO MAKE SPECIAL UNDER
Filed: 02 March 2009	:	THE GREEN TECHNOLOGY
Attorney Docket No. PA4788US	:	PILOT PROGRAM

This is a decision on the petition under 37 CFR 1.102, filed 09 December 2009 and Renewed on 11 May 2010, to make the above-identified application special under the pilot program for applications pertaining to Green Technologies as set forth 74 Federal Register Notice 64666 (December 8, 2009).

The petition is **GRANTED**.

A grantable petition to make an application special under 37 CFR 1.102 and the pilot program as set forth in 74 FR 64666 must be directed to a nonprovisional application filed under 35 USC 111(a) or be a national stage entry under 35 USC 371, exclusive of any reissue applications and be filed prior to the date of the notice, December 8, 2009.

In order to qualify for special status, the following requirements must be met. 1) The application must be classified in one of the eligible US classifications listed in section VI of the notice. 2) The application must have no more than 3 independent claims and no more than 20 total claims. 3) The application must not contain any multiple dependent claims. 4) The petition must state the basis for seeking special status, i.e., the claimed invention either: A) materially enhances the quality of the environment or B) materially contributes to: i) the discovery or development of renewable energy resources, ii) the more efficient utilization and conservation of energy resources, or iii) greenhouse gas emission reduction. 5) If the disclosure is not clear on its face that the claimed invention materially contributes under category (A) or (B), the petition must be accompanied by a statement by the applicant, assignee, or an attorney/agent registered to practice before the Office explaining how the materiality standard is met. 6) A statement that applicant will agree to make an election without traverse in a telephonic interview if a restriction requirement is made by the examiner. 7) The petition to make special must be filed electronically. 8) The petition must be filed at least one day prior to the date that a first Office Action appears in the Patent Application Information Retrieval (PAIR) system. 9) The petition

must be accompanied by a request for early publication in compliance with 37 CFR 1.219 and include the publication fee as set forth in 37 CFR 1.18(d).

The requirement for a fee for consideration of the petition to make special for applications pertaining to Green Technologies has been waived.

The instant petition complies with items 1 – 9 above. Accordingly, the above-identified application has been accorded "special" status.

Telephone inquires concerning this decision should be directed to Lee W. Young at 571-272-4549.

The application is being forwarded to the Technology Center Art Unit 2836 for action on the merits commensurate with this decision.

Lee W. Young
Quality Assurance Specialist
Technology Center 2800

UNITED STATES PATENT AND TRADEMARK OFFICE

Commissioner for Patents
United States Patent and Trademark Office
P.O. Box 1450
Alexandria, VA 22313-1450
www.uspto.gov

Daniel Luch
17161 Copper Hill Drive
Morgan Hill, CA 95037

COPY MAILED

MAR 3 1 2009

OFFICE OF PETITIONS

In re Application of	:	
Daniel Luch	:	
Application No. 12/380,743	:	DECISION ON PETITION
Filed: March 3, 2009	:	TO MAKE SPECIAL UNDER
Attorney Docket No.	:	37 CFR 1.102(c)(1)
	:	

This is a decision on the petition under 37 CFR 1.102(c)(1), filed March 3, 2009, to make the above-identified application special based on applicant's age as set forth in M.P.E.P. § 708.02, Section IV.

The petition is **GRANTED**.

A grantable petition to make an application special under 37 CFR 1.102(c)(1) and MPEP § 708.02, Section IV: Applicant's Age must be accompanied by evidence showing that at least one of the applicants is 65 years of age, or more, such as a birth certificate or a statement by applicant. No fee is required

The instant petition includes a declaration by the applicant and a photocopy of driver's license. Accordingly, the above-identified application has been accorded "special" status.

Telephone inquiries concerning this decision should be directed to Kimberly Inabinet at 571-272-4618.

All other inquiries concerning either the examination or status of the application should be directed to the Technology Center at 571-272-4000.

Upon completion of the pre-examination processing by the Office of Patent Application Processing, this application will be referred to Technology Center Art Unit 1795 for action on the merits commensurate with this decision.

Kimberly Inabinet
Petitions Examiner
Office of Petitions

UNITED STATES PATENT AND TRADEMARK OFFICE

Commissioner for Patents
United States Patent and Trademark Office
P.O. Box 1450
Alexandria, VA 22313-1450
www.uspto.gov

HARSHAW RESEARCH, INC.
210 W. TECUMSEH STREET
OTTAWA KS 66067

COPY MAILED

AUG 13 2009

OFFICE OF PETITIONS

In re Application of	:	DECISION
Margaret Marie Stinson	:	ON PETITION
Application No. 12/380809	:	
Filing or 371(c) Date: 05/28/2009	:	
Title of Invention:	:	
KEY RING SPREADER	:	

This is a decision on the Petition, filed May 28, 2009, requesting this Office accord the above-identified application a filing date of March 4, 2009.

The petition is **dismissed**.

Background

Application papers were deposited in the above-identified application on March 4, 2009. On March 30, 2009, the Office Patent Application Processing mailed a Notice of Incomplete Nonprovisional Application, ("Notice"), informing Applicant that the application had NOT been accorded a filing date, because the specification did not include at least one claim.

Applicant responds with the present petition and includes, *inter alia*, a Substitute Specification including claims, an Abstract, and Drawings, and requests this Office accord the above-identified application a filing date of March 4, 2009. In support of this request, Applicant states that the present application is a Continuation-In-Part ("CIP") of prior application 12/069,972, which has gone abandoned during the time that the Notice was mailed, and in order to maintain continuity, the present petition requests that this Office accord the present application a filing date of March 4, 2009.

Applicable Law, Rules and MPEP

35 U.S.C. § 111 provides as follows:

> The filing date of an application shall be the date on which the specification and any required drawing are received in the Patent and Trademark Office.

35 U.S.C. § 112 states:

> The specification shall conclude with one or more claims particularly pointing out and distinctly claiming the subject matter which the applicant regards as his invention.

Petitioner is reminded that the use of "shall" appears in 35 USC §§ 111 and 112 pertaining to the filing date of an application. It is well settled that the use of "shall" in a statute is the language of command, and where the directions of a statute are mandatory, strict compliance with the statutory terms is essential. Farrel Corp. v. U.S. Int'l Trade Comm'n, 942 F.2d 1147, 20 USPQ2d 1912 (Fed. Cir. 1991). That is, it is mandatory that the Director require a specification and one or more claims in order to accord an application a filing date. See BEC Pressure Controls Corp. v. Dwyer Instruments, Inc., 380 F.Supp. 1397, 1399, 182 USPQ 190, 192 (N.D. Ind. 1974). The language of the statute does not permit the Director any discretion. Id.

Conclusion

The evidence has been considered; however, Petitioner has failed to demonstrate that the application papers deposited with this Office on March 4, 2009, were sufficient to accord the application papers a filing date.

Petitioner is advised that prior application 12/069,972 may be revived under 37 CFR 1.137(b) for continuity purposes only.

The application is being referred to the Office of Patent Application Processing for processing of the application papers filed May 28, 2009 in response to the Notice.

Telephone inquiries concerning this matter should be directed Attorney Derek Woods at (571) 272-3232.

/Derek L. Woods/
Derek L. Woods
Attorney
Office of Petitions

UNITED STATES PATENT AND TRADEMARK OFFICE

Commissioner for Patents
United States Patent and Trademark Office
P.O. Box 1450
Alexandria, VA 22313-1450
www.uspto.gov

Daniel Luch
17161 Copper Hill Drive
Morgan Hill CA 95037

COPY MAILED

APR 23 2009

OFFICE OF PETITIONS

In re Application of	:	
Daniel Luch	:	
Application No. 12/380,817	:	DECISION ON PETITION
Filed: March 4, 2009	:	TO MAKE SPECIAL UNDER
Attorney Docket No.	:	37 CFR 1.102(c)(1)
	:	

This is a decision on the petition under 37 CFR 1.102(c)(1), filed March 4, 2009, to make the above-identified application special based on applicant's age as set forth in M.P.E.P. § 708.02, Section IV.

The petition is **GRANTED**.

A grantable petition to make an application special under 37 CFR 1.102(c)(1) and MPEP § 708.02, Section IV: Applicant's Age must be accompanied by evidence showing that at least one of the applicants is 65 years of age, or more, such as a birth certificate or a statement by applicant. No fee is required

The instant petition includes a statement by the applicant. Accordingly, the above-identified application has been accorded "special" status.

Telephone inquiries concerning this decision should be directed to JoAnne Burke at 571-272-4584.

All other inquiries concerning either the examination or status of the application should be directed to the Technology Center.

The application is being forwarded to the Technology Center Art Unit 1795 for action on the merits commensurate with this decision.

Ramesh Krishnamurthy

Ramesh Krishnamurthy
Petitions Examiner
Office of Petitions

UNITED STATES PATENT AND TRADEMARK OFFICE

Commissioner for Patents
United States Patent and Trademark Office
P.O. Box 1450
Alexandria, VA 22313-1450
www.uspto.gov

COPY MAILED

JUN 0 5 2009

OFFICE OF PETITIONS

Charles G. Call
20 East Goeth ST CH1
Chicago IL 60610

In re Application of	:	
James Logan et al.	:	
Application No. 12/380,908	:	DECISION ON PETITION
Filed: March 4, 2009	:	TO MAKE SPECIAL UNDER
Attorney Docket No. I-02	:	37 CFR 1.102(c)(1)
	:	

This is a decision on the petition under 37 CFR 1.102(c)(1), filed March 4, 2009, to make the above-identified application special based on applicant's age as set forth in M.P.E.P. § 708.02, Section IV.

The petition is **GRANTED**.

A grantable petition to make an application special under 37 CFR 1.102(c)(1) and MPEP § 708.02, Section IV: Applicant's Age must be accompanied by evidence showing that at least one of the applicants is 65 years of age, or more, such as a birth certificate or a statement by applicant. No fee is required

The instant petition includes a statement from the applicant that he is 65 years of age or older as required under M.P.E.P. § 708.02. Accordingly, the above-identified application has been accorded "special" status.

Telephone inquiries concerning this decision should be directed to Ron Abelson at 571-272-3165.

All other inquiries concerning either the examination or status of the application should be directed to the Technology Center.

The application is being forwarded to the Technology Center Art Unit 2614 for action on the merits commensurate with this decision.

David Bucci
Petitions Examiner
Office of Petitions

UNITED STATES PATENT AND TRADEMARK OFFICE

Commissioner for Patents
United States Patent and Trademark Office
P.O. Box 1450
Alexandria, VA 22313-1450
www.uspto.gov

Charles G. Call
20 East Goeth ST CH1
Chicago IL 60610

COPY MAILED

APR 27 2009

OFFICE OF PETITIONS

In re Application of	:	
James D. Logan, et al.	:	
Application No. 12/380,955	:	DECISION ON PETITION
Filed: March 4, 2009	:	TO MAKE SPECIAL UNDER
Attorney Docket No. I-03	:	37 CFR 1.102(c)(1)
	:	

This is a decision on the petition under 37 CFR 1.102(c)(1), filed March 4, 2009, to make the above-identified application special based on applicant's age as set forth in M.P.E.P. § 708.02, Section IV.

The petition is **GRANTED**.

A grantable petition to make an application special under 37 CFR 1.102(c)(1) and MPEP § 708.02, Section IV: Applicant's Age must be accompanied by evidence showing that at least one of the applicants is 65 years of age, or more, such as a birth certificate or a statement by applicant. No fee is required

The instant petition includes a statement from the applicant Charles G. Call declaring that he is 65 years of age or older. Accordingly, the above-identified application has been accorded "special" status.

Telephone inquiries concerning this decision should be directed to Terri Williams at 571-272-2991.

All other inquiries concerning either the examination or status of the application should be directed to the Technology Center.

The application is being forwarded to the Technology Center Art Unit 2614 for action on the merits commensurate with this decision.

Terri Williams

Terri Williams
Petitions Examiner
Office of Petitions

UNITED STATES PATENT AND TRADEMARK OFFICE

Commissioner for Patents
United States Patent and Trademark Office
P.O. Box 1450
Alexandria, VA 22313-1450
www.uspto.gov

CHARLES G. CALL
20 EAST GOETH ST. CHI
CHICAGO, IL 60610

MAILED

APR 0 8 2009

OFFICE OF PETITIONS

In re Application of	:	
James D. LOGAN, et al	:	
Application No. 12/380,961	:	DECISION ON PETITION
Filed: March 4, 2009	:	TO MAKE SPECIAL UNDER
Attorney Docket No. 1-01	:	37 CFR 1.102(c)(1)
	:	

This is a decision on the petition under 37 CFR 1.102(c)(1), filed March 4, 2009, to make the above-identified application special based on applicant's age as set forth in M.P.E.P. § 708.02, Section IV.

The petition is **GRANTED**.

A grantable petition to make an application special under 37 CFR 1.102(c)(1) and MPEP § 708.02, Section IV: Applicant's Age must be accompanied by evidence showing that at least one of the applicants is 65 years of age, or more, such as a birth certificate or a statement by applicant. No fee is required

The instant petition includes a statement signed by Applicant Charles G. Call. Accordingly, the above-identified application has been accorded "special" status.

Telephone inquiries concerning this decision should be directed to the undersigned at 571-272-6735.

All other inquiries concerning either the examination or status of the application should be directed to the Technology Center.

The application is being forwarded to Technology Center Art Unit 2614 for action on the merits commensurate with this decision.

Diane Goodwyn
Petitions Examiner
Office of Petitions

UNITED STATES PATENT AND TRADEMARK OFFICE

Commissioner for Patents
United States Patent and Trademark Office
P.O. Box 1450
Alexandria, VA 22313-1450
www.uspto.gov

DISNEY ENTERPRISES
C/O FARJAMI & FARJAMI LLP
26522 LA ALAMEDA AVENUE SUITE 360
MISSION VIEJO CA 92691

COPY MAILED

APR 06 2009

OFFICE OF PETITIONS

In re Application of	:	
Liu, et al.	:	
Application No. 12/381,028	:	DECISION REFUSING STATUS
Filed: March 5, 2009	:	UNDER 37 CFR 1.47(a)
Attorney Docket No. 0260136	:	

This is in response to the petition under 37 CFR 1.47(a), filed March 5, 2009.

The petition under 37 CFR 1.47(a) is **DISMISSED**.

Rule 47 applicant is given TWO MONTHS from the mailing date of this decision to reply, correcting the below-noted deficiencies. Any reply should be entitled "Request for Reconsideration of Petition Under 37 CFR 1.47(a)," and should only address the deficiencies noted below, except that the reply may include an oath or declaration executed by the non-signing inventor. **Failure to respond will result in abandonment of the application.** Any extensions of time will be governed by 37 CFR 1.136(a).

A grantable petition under 37 CFR 1.47(a) requires: (1) proof that the non-signing inventor cannot be reached after diligent effort or refuses to sign the oath or declaration after having been presented with the application papers (specification, claims, drawings, oath or declaration); (2) an acceptable oath or

declaration in compliance with 37 CFR 1.63; (3) the petition fee; and (4) a statement of the last known address of the non-signing inventor. Rule 47 applicant has not met requirement (2) above.

As to requirement (2), petitioner has failed to submit an oath or declaration in compliance with 37 CFR 1.63. The declaration does not contain the citizenship of inventor Liu.

Applicants are reminded that the two month period for submitting replacement drawings continues to run from the March 27, 2009 Notice to File Missing Parts.

A petition under 37 CFR 1.47 requires a fee of $200. Applicant submitted $130. Accordingly, the difference of $70 has been charged to Deposit Account No. 50-0731, as authorized.

Further correspondence with respect to this matter should be addressed as follows:

By mail: Mail Stop Petitions
Commissioner for Patents
P.O. Box 1450
Alexandria VA 22313-1450

By FAX: (571)273-8300
Attn: Office of Petitions

Telephone inquiries related to this decision may be directed to the undersigned at (571)272-3207.

Cliff Congo
Petitions Attorney
Office of Petitions

UNITED STATES PATENT AND TRADEMARK OFFICE

Commissioner for Patents
United States Patent and Trademark Office
P.O. Box 1450
Alexandria, VA 22313-1450
www.uspto.gov

DISNEY ENTERPRISES
C/O FARJAMI & FARJAMI LLP
26522 LA ALAMEDA AVENUE SUITE 360
MISSION VIEJO CA 92691

COPY MAILED

MAY 15 2009

OFFICE OF PETITIONS

In re Application of	:	
Liu, et al.	:	
Application No. 12/381,028	:	DECISION ACCORDING STATUS
Filed: March 5, 2009	:	UNDER 37 CFR 1.47(a)
Attorney Docket No. 0260136	:	

This is in response to the renewed petition under 37 CFR 1.47(a), filed April 16, 2009.

The petition under 37 CFR 1.47(a) is **GRANTED**.

Applicant filed a petition under 37 CFR 1.47(a) on March 5, 2009, to make the application for patent without the signature of joint inventors Liu and Shen. However, the petition was dismissed in a decision mailed on April 6, 2009. The decision explained that the 37 CFR 1.63 declaration was not acceptable, because it did not contain the citizenship of inventor Liu.

On renewed petition, Rule 47 applicant has submitted a proper 37 CFR 1.63 declaration, containing the citizenship of inventor Liu. The other requirements for a grantable Rule 47 petition were previously met with the petition filed on March 5, 2009.

The above-identified application and papers have been reviewed and found to be in compliance with 37 CFR 1.47(a). Accordingly, the above-identified application is hereby accorded Rule 1.47(a) status.

As provided in 37 CFR 1.47(c), this Office will forward notice of this application's filing to the non-signing inventor at the last known address provided on the declaration. Notice of the filing of this application will also be published in the Official Gazette.

The application is being forwarded to the Office of Patent Application Processing for pre-examination processing.

Telephone inquiries related to this decision may be directed to the undersigned at (571)272-3207.

Cliff Congo
Petitions Attorney
Office of Petitions

UNITED STATES PATENT AND TRADEMARK OFFICE

Commissioner for Patents
United States Patent and Trademark Office
P.O. Box 1450
Alexandria, VA 22313-1450
www.uspto.gov

SHELDON SHEN
10 CAROL PINE LN
ARCADIA CA 91007

COPY MAILED

MAY 15 2009

OFFICE OF PETITIONS

In re Application of
Liu, et al.
Application No. 12/381,028
Filed: March 5, 2009
Title: Method and System for Adaptive Data Transfer Over Packet Networks

LETTER

Dear Mr. Shen:

You are named as a joint inventor in the above-identified United States patent application filed under the provisions of 35 USC 116 (United States Code) and 37 CFR 1.47(a), Rules of Practice in Patent Cases. Should a patent be granted on the application you will be designated therein as a joint inventor.

As a joint inventor, you are entitled to inspect any paper in the file wrapper of the application, order copies of all or any part thereof (at a prepaid cost per 37 CFR 1.19) or make your position of record in the application. Alternatively, you may arrange to do any of the preceding through a registered patent attorney or agent presenting written authorization from you. If you care to join the application, agent of record would presumably assist you. Joining in the application would entail the filing of an appropriate oath or declaration by you pursuant to 37 CFR 1.63.

Telephone inquiries regarding this communication should be directed to Petitions Attorney Cliff Congo at (571)272-3207. Requests for information regarding your application should be directed to the File Information Unit at (703) 308-2733. Information regarding how to pay for and order a copy of the application, or a specific paper in the application, should be directed to the Certification Division at (703) 308-9726 or 1-800-972-6382 (outside the Washington D.C. area).

Cliff Congo
Petitions Attorney
Office of Petitions

UNITED STATES PATENT AND TRADEMARK OFFICE

Commissioner for Patents
United States Patent and Trademark Office
P.O. Box 1450
Alexandria, VA 22313-1450
www.uspto.gov

HOWARD LIU
2335 MONTECITO DR
SAN MARINO CA 91108

COPY MAILED

MAY 15 2009

OFFICE OF PETITIONS

In re Application of
Liu, et al.
Application No. 12/381,028
Filed: March 5, 2009
Title: Method and System for Adaptive Data Transfer Over Packet Networks

LETTER

Dear Mr. Liu:

You are named as a joint inventor in the above-identified United States patent application filed under the provisions of 35 USC 116 (United States Code) and 37 CFR 1.47(a), Rules of Practice in Patent Cases. Should a patent be granted on the application you will be designated therein as a joint inventor.

As a joint inventor, you are entitled to inspect any paper in the file wrapper of the application, order copies of all or any part thereof (at a prepaid cost per 37 CFR 1.19) or make your position of record in the application. Alternatively, you may arrange to do any of the preceding through a registered patent attorney or agent presenting written authorization from you. If you care to join the application, agent of record would presumably assist you. Joining in the application would entail the filing of an appropriate oath or declaration by you pursuant to 37 CFR 1.63.

Telephone inquiries regarding this communication should be directed to Petitions Attorney Cliff Congo at (571)272-3207. Requests for information regarding your application should be directed to the File Information Unit at (703) 308-2733. Information regarding how to pay for and order a copy of the application, or a specific paper in the application, should be directed to the Certification Division at (703) 308-9726 or 1-800-972-6382 (outside the Washington D.C. area).

Cliff Congo
Petitions Attorney
Office of Petitions

UNITED STATES PATENT AND TRADEMARK OFFICE

Commissioner for Patents
United States Patent and Trademark Office
P.O. Box 1450
Alexandria, VA 22313-1450
www.uspto.gov

GREENBERG TRAURIG, LLP
200 PARK AVE.
P.O. BOX 677
FLORHAM PARK NJ 07932

MAILED

JAN 12 2010

OFFICE OF PETITIONS

In re Application of	:	
Katherin G. Truncale, et al.	:	
Application No. 12/381,072	:	DECISION ON PETITION
Filed: March 5, 2009	:	TO MAKE SPECIAL UNDER
Attorney Docket No. 103248-010602	:	37 CFR 1.102(c)(1)
	:	

This is a decision on the petition under 37 CFR 1.102(c)(1), filed November 3, 2009, to make the above-identified application special based on applicant's age as set forth in M.P.E.P. § 708.02, Section IV.

The petition is **GRANTED**.

A grantable petition to make an application special under 37 CFR 1.102(c)(1) and MPEP § 708.02, Section IV: Applicant's Age must be accompanied by evidence showing that at least one of the applicants is 65 years of age, or more, such as a birth certificate or a statement by applicant. No fee is required

The instant petition includes a statement from the attorney of record declaring that he/she is in possession of such evidence that proves the applicant, Arthur A. Gertzman is 65 years of age or older. Accordingly, the above-identified application has been accorded "special" status.

Telephone inquiries concerning this decision should be directed to Terri Johnson at 571-272-2991.

All other inquiries concerning either the examination or status of the application should be directed to the Technology Center.

The application is being forwarded to the Technology Center Art Unit 3738 for action on the merits commensurate with this decision.

Terri Johnson

Terri Johnson
Petitions Examiner
Office of Petitions

UNITED STATES PATENT AND TRADEMARK OFFICE

Commissioner for Patents
United States Patent and Trademark Office
P.O. Box 1450
Alexandria, VA 22313-1450
www.uspto.gov

William J. Miller
Miller Law Office
P.O. Box 547
Ponca City OK 74602

COPY MAILED

AUG 28 2009

OFFICE OF PETITIONS

In re Application of	:	
Charotte C, Janzen	:	
Application No. 12/381,094	:	DECISION ON PETITION
Filed: March 7, 2009	:	TO MAKE SPECIAL UNDER
Attorney Docket No.	:	37 CFR 1.102(c)(1)
	:	

This is a decision on the petition under 37 CFR 1.102(c)(1), filed May 21, 2009 and supplemented on August 7, 2009, to make the above-identified application special based on applicant's age as set forth in M.P.E.P. § 708.02, Section IV.

The petition is **GRANTED**.

A grantable petition to make an application special under 37 CFR 1.102(c)(1) and MPEP § 708.02, Section IV: Applicant's Age must be accompanied by evidence showing that at least one of the applicants is 65 years of age, or more, such as a birth certificate or a statement by applicant. No fee is required

The instant petition includes a statement by the inventor. Accordingly, the above-identified application has been accorded "special" status.

Telephone inquiries concerning this decision should be directed to JoAnne Burke at 571-272-4584.

All other inquiries concerning either the examination or status of the application should be directed to the Technology Center.

The application is being forwarded to the Technology Center Art Unit 2612 for action on the merits commensurate with this decision.

Ramesh Krishnamurthy

Ramesh Krishnamurthy
Petitions Examiner
Office of Petitions

UNITED STATES PATENT AND TRADEMARK OFFICE

Commissioner for Patents
United States Patent and Trademark Office
P.O. Box 1450
Alexandria, VA 22313-1450
www.uspto.gov

ROBERT CHARLES HILL
235 MONTGOMERY STREET # 821
SAN FRANCISCO, CA 94104

MAILED

AUG 12 2009

OFFICE OF PETITIONS

In re Application of	:	ON PETITION
Robert C. Franklin	:	
Application No. 12/381,107	:	
Filed: March 6, 2009	:	
Attorney Docket No. 4616	:	

This is a decision on the petition under 37 CFR 1.102(c)(1), filed March 6, 2009, to make the above-identified application special based on applicant's age as set forth in M.P.E.P. § 708.02, Section IV.

The petition is **GRANTED**.

A grantable petition to make an application special under 37 CFR 1.102(c)(1) and MPEP § 708.02, Section IV: Applicant's Age must be accompanied by evidence showing that at least one of the applicants is 65 years of age, or more, such as a birth certificate or a statement by applicant. No fee is required.

The instant petition includes a statement by the applicant's attorney that he is 65 years of age, and is also accompanied with a copy of applicant's Wisconsin birth certificate. Accordingly, the above-identified application has been accorded "special" status.

Telephone inquiries concerning this decision should be directed to Alicia Kelley at 571-272-6059. All other inquiries concerning either the examination or status of the application should be directed to the Technology Center.

This matter is being referred to the Technology Center Art Unit 2617 for action on the merits commensurate with this decision.

/Liana Walsh/
Liana Walsh
Petitions Examiner
Office of Petitions

UNITED STATES PATENT AND TRADEMARK OFFICE

Commissioner for Patents
United States Patent and Trademark Office
P.O. Box 1450
Alexandria, VA 22313-1450
www.uspto.gov

WILLIAM T. MORRISON, JR.
4917 TOP ROYAL LANE
JACKSONVILLE, FL 32277

COPY MAILED

MAR 19 2009

OFFICE OF PETITIONS

In re Application of	:	
William T. **MORRSION**	:	
Application No. 12/381,112	:	DECISION ON PETITION
Filed: March 6, 2009	:	TO MAKE SPECIAL
Attorney Docket No.	:	UNDER 37 CFR 1.102(c)(1)
	:	

This is a decision on the petition under 37 CFR 1.102(c)(1), filed March 6, 2009, to make the above-identified application special based on applicant's age as set forth in M.P.E.P. § 708.02, Section IV.

The petition is **GRANTED**.

A grantable petition to make an application special under 37 CFR 1.102(c)(1) and MPEP § 708.02, Section IV: Applicant's Age must be accompanied by evidence showing that at least one of the applicants is 65 years of age, or more, such as a birth certificate or a statement by applicant. No fee is required

The instant petition includes the declaration of inventor William T. Morrison, attesting to his age. Accordingly, the above-identified application will be accorded "special" status.

Inquiries concerning either the examination or status of the application should be directed to the Office of Initial Patent Application Processing at 571-272-4000.

Telephone inquiries concerning this decision should be directed to the undersigned at 571-272-7253.

The application is being forwarded to the Office of Initial Patent Application Processing and will be accorded "special" status when pre-examination processing is complete.

/Monica A. Graves/
Petitions Examiner, Office of Petitions

UNITED STATES PATENT AND TRADEMARK OFFICE

Commissioner for Patents
United States Patent and Trademark Office
P.O. Box 1450
Alexandria, VA 22313-1450
www.uspto.gov

DIMITRI PETROV
4570 DRAPER AVE.
MONTREAL QC H4A 2P4 CA CANADA

COPY MAILED

MAY 1 5 2009

OFFICE OF PETITIONS

In re Application of	:	
Dimitri PETROV	:	
Application No. 12/381,141	:	DECISION ON PETITION
Filed: March 9, 2009	:	TO MAKE SPECIAL UNDER
Attorney Docket No. PETROV - ANDERS	:	37 CFR 1.102(c)(1)
	:	

This is a decision on the petition under 37 CFR 1.102(c)(1), filed April 22, 2009, to make the above-identified application special based on applicant's age as set forth in M.P.E.P. § 708.02, Section IV.

The petition is **GRANTED**.

A grantable petition to make an application special under 37 CFR 1.102(c)(1) and MPEP § 708.02, Section IV: Applicant's Age must be accompanied by evidence showing that at least one of the applicants is 65 years of age, or more, such as a birth certificate or a statement by applicant. No fee is required

The instant petition includes a statement signed by the applicant. Accordingly, the above-identified application has been accorded "special" status.

This application is being referred back to the Office of Patent Application Processing. This application will be accorded "special" status when pre-examination processing is done.

Telephone inquiries concerning this decision should be directed to the undersigned at 571-272-6735.

Diane Goodwyn
Petitions Examiner
Office of Petitions

UNITED STATES PATENT AND TRADEMARK OFFICE

Commissioner for Patents
United States Patent and Trademark Office
P.O. Box 1450
Alexandria, VA 22313-1450
www.uspto.gov

MAILED

MAY 26 2010

OFFICE OF PETITIONS

Jones Day
222 East 41st Street
New York, NY 10017

In re Application of	:	
Brent Keeth et al.	:	
Application No. 12/381,143	:	DECISION ON PETITION
Filed: March 6, 2009	:	TO WITHDRAW
Attorney Docket No. ROUND 3.0-063 DVICODVCOCO	:	FROM RECORD

This is a decision on the Request to Withdraw as attorney or agent of record under 37 C.F.R. § 1.36(b), filed March 16, 2010.

The request is **moot because a revocation of power of attorney has been filed**.

A review of the file record indicates that the power of attorney to all attorneys/agents associated with customer number 20583 have been revoked by the assignee of the patent application on May 3, 2010. Accordingly, the request to withdraw under 37 C.F.R. § 1.36(b) is moot.

All future communications from the Office will continue to be directed to the below listed until otherwise notified by applicant.

Telephone inquires concerning this decision should be directed to Kimberly Inabinet at 571-272-4618.

/Kimberly Inabinet/

Kimberly Inabinet
Petitions Examiner
Office of Petitions

cc: Round
Lerner, David, Littenberg, Krumholz
& Mentlik, LLP
600 South Avenue West
Westfield, NJ 07090

UNITED STATES PATENT AND TRADEMARK OFFICE

Commissioner for Patents
United States Patent and Trademark Office
P.O. Box 1450
Alexandria, VA 22313-1450
www.uspto.gov

DENNIS W. BEECH
(LAW OFFICE OF DENNIS W. BEECH)
P.O. BOX 519
MURRIETA, CA 92564-0519

MAILED

APR 0 8 2009

OFFICE OF PETITIONS

In re Application of	:	
James CAOUETTE, SR.	:	
Application No. 12/381,621	:	DECISION ON PETITION
Filed: March 13, 2009	:	TO MAKE SPECIAL UNDER
Attorney Docket No.	:	37 CFR 1.102(c)(1)
	:	

This is a decision on the petition under 37 CFR 1.102(c)(1), filed March 13, 2009, to make the above-identified application special based on applicant's age as set forth in M.P.E.P. § 708.02, Section IV.

The petition is **GRANTED**.

A grantable petition to make an application special under 37 CFR 1.102(c)(1) and MPEP § 708.02, Section IV: Applicant's Age must be accompanied by evidence showing that at least one of the applicants is 65 years of age, or more, such as a birth certificate or a statement by applicant. No fee is required

The instant petition includes a declaration statement signed by the applicant. Accordingly, the above-identified application has been accorded "special" status.

This application is being referred back to the Office of Patent Application Processing for further processing. This application will be accorded "special" status when pre-examination processing is done.

Telephone inquiries concerning this decision should be directed to the undersigned at 571-272-6735.

Diane Goodwyn
Petitions Examiner
Office of Petitions

UNITED STATES PATENT AND TRADEMARK OFFICE

UNITED STATES DEPARTMENT OF COMMERCE
United States Patent and Trademark Office
Address: COMMISSIONER FOR PATENTS
P.O. Box 1450
Alexandria, Virginia 22313-1450
www.uspto.gov

APPLICATION NO.	FILING DATE	FIRST NAMED INVENTOR	ATTORNEY DOCKET NO.	CONFIRMATION NO.
12/381,637	03/13/2009	Charlie Hotz	Sol-2US	3750

58713 7590 02/02/2010
NOLD INTELLECTUAL PROPERTY LAW
101 California Street
Suite 2450
San Francisco, CA 94111

EXAMINER

ART UNIT	PAPER NUMBER
1795	

MAIL DATE	DELIVERY MODE
02/02/2010	PAPER

Please find below and/or attached an Office communication concerning this application or proceeding.

The time period for reply, if any, is set in the attached communication.

UNITED STATES PATENT AND TRADEMARK OFFICE

Commissioner for Patents
United States Patent and Trademark Office
P.O. Box 1450
Alexandria, VA 22313-1450
www.uspto.gov

NOLD INTELLECTUAL PROPERTY LAW
101 California Street
Suite 2450
San Francisco CA 94111

FEB 0 2 2010

In re Application of Hotz et al. Application No. 12/381,637 Filed: 3/13/2009 Attorney Docket No. **Sol-2US**	DECISION ON PETITION TO MAKE SPECIAL UNDER THE GREEN TECHNOLOGY PILOT PROGRAM

This is a decision on the petition under 37 CFR 1.102, filed 12/11/2009, to make the above-identified application special under the pilot program for applications pertaining to Green Technologies as set forth 74 Federal Register Notice 64666 (December 8, 2009).

The petition is **GRANTED**.

A grantable petition to make an application special under 37 CFR 1.102 and the pilot program as set forth in 74 FR 64666 must be directed to a nonprovisional application filed under 35 USC 111(a) or be a national stage entry under 35 USC 371, exclusive of any reissue applications and be filed prior to the date of the notice, December 8, 2009.

In order to qualify for special status, the following requirements must be met. 1) The application must be classified in one of the eligible US classifications listed in section VI of the notice. 2) The application must have no more than 3 independent claims and no more than 20 total claims. 3) The application must not contain any multiple dependent claims. 4) The petition must state the basis for seeking special status, i.e., the claimed invention either: A) materially enhances the quality of the environment or B) materially contributes to: i) the discovery or development of renewable energy resources, ii) the more efficient utilization and conservation of energy resources, or iii) greenhouse gas emission reduction. 5) If the disclosure is not clear on its face that the claimed invention materially contributes under category (A) or (B), the petition must be accompanied by a statement by the applicant, assignee, or an attorney/agent registered to practice before the Office explaining how the materiality standard is met. 6) A statement that applicant will agree to make an election without traverse in a telephonic interview if a restriction requirement is made by the examiner. 7) The petition to make special must be filed electronically. 8) The petition must be filed at least one day prior to the date that a first Office Action appears in the Patent Application Information Retrieval (PAIR) system. 9) The petition

must be accompanied by a request for early publication in compliance with 37 CFR 1.219 and include the publication fee as set forth in 37 CFR 1.18(d).

The requirement for a fee for consideration of the petition to make special for applications pertaining to Green Technologies has been waived.

The instant petition complies with items 1 – 9 above. Accordingly, the above-identified application has been accorded "special" status.

Telephone inquires concerning this decision should be directed to Tom Dunn at 571-272-1171.

The application is being forwarded to the Technology Center Art Unit 1795 for action on the merits commensurate with this decision.

/Tom Dunn/

Tom Dunn
Quality Assurance Specialist
Technology Center 1700

UNITED STATES PATENT AND TRADEMARK OFFICE

Commissioner for Patents
United States Patent and Trademark Office
P.O. Box 1450
Alexandria, VA 22313-1450
www.uspto.gov

In re Application of
Wayne Albert Patterson

Application No. 12381780

Filed: March 17,2009

Attorney Docket No.

:DECISION ON PETITION TO MAKE SPECIAL
:UNDER 37 CFR 1.102(c)(1)

This is a decision on the electronic petition under 37 CFR 1.102 (c)(1), filed 03-MAR-2010 to make the above-identified application special based on applicant's age as set forth in MPEP § 708.02, Section IV.

The petition is **GRANTED**.

A grantable petition to make an application special under 37 CFR 1.102(c)(1), MPEP § 708.02, Section IV: Applicant's Age must include a statement by applicant or a registered practitioner having evidence that applicant is at least 65 years of age. No fee is required.

Accordingly, the above-identified application has been accorded "special" status and will be taken up for action by the examiner upon the completion of all pre-examination processing.

Telephone inquiries concerning this electronic decision should be directed to the Electronic Business Center at 866-217-9197.

All other inquiries concerning either the examination or status of the application should be directed to the Technology Center.

UNITED STATES PATENT AND TRADEMARK OFFICE

Commissioner for Patents
United States Patent and Trademark Office
P.O. Box 1450
Alexandria, VA 22313-1450
www.uspto.gov

MAILED

JAN 22 2010

OFFICE OF PETITIONS

PATENT LAW OFFICE OF DAVID G. BECK
P. O. BOX 1146
MILL VALLEY CA 94942

In re Application of	:	
BEECHER ET AL.	:	DECISION ON PETITION
Application No. 12/381,821	:	TO MAKE SPECIAL UNDER
Filed: March 17, 2009	:	THE GREEN TECHNOLOGY
Attorney Docket No. TES009-2	:	PILOT PROGRAM

This is a decision on the petition under 37 CFR 1.102, filed December 14, 2009, to make the above-identified application special under the pilot program for applications pertaining to Green Technologies as set forth in 74 Federal Register Notice 64666 (December 8, 2009).

The petition is **DISMISSED**.

If reconsideration of this decision is desired, a petition for reconsideration must be filed within ONE (1) MONTH OR THIRTY (30) DAYS from the mail date of this decision, whichever is longer. No extension of this time limit can be granted under 37 CFR 1.136(a) or (b). The petition for reconsideration should include an exhaustive attempt to provide the lacking item(s) noted below, since, after a decision on the petition for reconsideration, no further reconsideration or review of the matter will be undertaken by the Director.

A grantable petition to make an application special under 37 CFR 1.102 and the pilot program as set forth in 74 FR 64666 must be directed to a nonprovisional application filed under 35 USC 111(a) or be a national stage entry under 35 USC 371, exclusive of any reissue applications and be filed prior to the date of the notice, December 8, 2009.

In order to qualify for special status, the following requirements must be met. 1) The application must be classified in one of the eligible US classifications listed in section VI of the notice. 2) The application must have no more than 3 independent claims and no more than 20 total claims. 3) The application must not contain any multiple dependent claims. 4) The petition must state the basis for seeking special status, i.e., the claimed invention either: A) materially enhances the quality of the environment or B) materially contributes to: i) the discovery or development of renewable energy resources, ii) the more efficient utilization and conservation of energy resources, or iii) greenhouse gas emission reduction. 5) If the disclosure is not clear on its face that the claimed invention materially contributes under category (A) or (B), the petition must be

accompanied by a statement by the applicant, assignee, or an attorney/agent registered to practice before the Office explaining how the materiality standard is met. 6) A statement that applicant will agree to make an election without traverse in a telephonic interview if a restriction requirement is made by the examiner. 7) The petition to make special must be filed electronically. 8) The petition must be filed at least one day prior to the date that a first Office Action appears in the Patent Application Information Retrieval (PAIR) system. 9) The petition must be accompanied by a request for early publication in compliance with 37 CFR 1.219 and include the publication fee as set forth in 37 CFR 1.18(d).

The requirement for a fee for consideration of the petition to make special for applications pertaining to Green Technologies has been waived.

The petition lacks items 1 and 5 above for the reasons as explained in more detail below.

In regard to item 1, this application has been classified (USPC 429/121) in an area that is not one of the eligible US classifications listed in section VI of the notice. Therefore, this application is not eligible for the Pilot Program. The classification limitations are purposefully made to be narrow for the Pilot Program; however, these may be expanded based upon the success of the Pilot Program. Petitioner may file a preliminary amendment that would cause this application to be classified else where. However, while petitioner may suggest a classification (see, e.g., MPEP 708.02(a)(VII)(C)), the application will be assigned to the most appropriate classification based upon current U.S. classification guidelines. Furthermore, a petition for the Pilot Program should not be filed until and unless all of the requirements set forth in the Notice are met; i.e., a petition should not be filed for an application that is currently classified outside the eligible classifications set forth in the Notice.

In regard to item 5, it is noted that the instant petition includes a statement explaining how the instant application materially contributes to category (B). The instant invention is directed to a "Battery Cell With A Partial Dielectric Barrier For Improved Battery Pack Mechanical And Thermal Performance". Petitioner's argument is that the use of the instant battery in electric vehicles would potentially (a) provide weight savings, (b) prevent destruction of the vehicle due to a thermal runaway event, and (c) "help to reduce the number of vehicles utilizing internal combustion engines." Petitioner should note that the prevention of potential destruction of the vehicle due to a thermal runaway event is a safety issue and the potential reduction in energy consumption via combustion systems and weight reduction depends upon how an end user might use the instant invention. As stated in the notice, the materiality standard does not permit an applicant to speculate as to how a hypothetical end-user might specially apply the invention in a manner than could materially contribute to category (A) or (B). *Also see MPEP § 708.02 (VI).* Accordingly, it is unclear as to how the claimed invention would materially contribute to category (A) or (B).

Further correspondence with respect to this matter should be addressed as follows:

By Mail: Mail Stop PETITION
Commissioner for Patents
P. O. Box 1450
Alexandria, VA 22313-1450

By hand: U. S. Patent and Trademark Office
Customer Service Window, Mail Stop Petitions
Randolph Building
401 Dulany Street
Alexandria, VA 22314

By FAX: (571) 273-8300

Telephone inquiries concerning this decision should be directed to Gay Ann Spahn at 571-272-8011.

All other inquiries concerning either the examination or status of the application should be directed to the Technology Center.

The application is being forwarded to the Technology Center Art Unit 1795 for action in its regular turn.

Ramesh Krishnamurthy

Ramesh Krishnamurthy
Petitions Examiner
Office of Petitions

UNITED STATES PATENT AND TRADEMARK OFFICE

Commissioner for Patents
United States Patent and Trademark Office
P.O. Box 1450
Alexandria, VA 22313-1450
www.uspto.gov

JOSE L. ZORRILLA
P.O. BOX 364732
SAN JUAN PR 00936

COPY MAILED

JUL 06 2009

OFFICE OF PETITIONS

In re Application of	:	
Jose Luis Zorrilla Perez	:	
Application No. 12/381,820	:	DECISION ON PETITION
Filed: March 16, 2009	:	TO MAKE SPECIAL UNDER
Attorney Docket No.	:	37 CFR 1.102(c)(1)
	:	

This is a decision on the petition under 37 CFR 1.102(c)(1), filed June 2, 2009, to make the above-identified application special based on applicant's age as set forth in M.P.E.P. § 708.02, Section IV.

The petition is **GRANTED**.

A grantable petition to make an application special under 37 CFR 1.102(c)(1) and MPEP § 708.02, Section IV: Applicant's Age must be accompanied by evidence showing that at least one of the applicants is 65 years of age, or more, such as a birth certificate or a statement by applicant. No fee is required

The instant petition includes a copy of applicant's birth certificate. Accordingly, the above-identified application has been accorded "special" status.

This application is being referred back to the Office of Patent Application Processing. This application will be accorded "special" status when pre-examination processing is done.

Telephone inquiries concerning this decision should be directed to the undersigned at 571-272-6735.

Diane Goodwyn
Petitions Examiner
Office of Petitions

UNITED STATES PATENT AND TRADEMARK OFFICE

UNITED STATES DEPARTMENT OF COMMERCE
United States Patent and Trademark Office
Address: COMMISSIONER FOR PATENTS
P.O. Box 1450
Alexandria, Virginia 22313-1450
www.uspto.gov

APPLICATION NO.	FILING DATE	FIRST NAMED INVENTOR	ATTORNEY DOCKET NO.	CONFIRMATION NO.
12/381,871	03/17/2009	Min Carroll		8356

7590 04/09/2010

Min Carroll
PO BOX 236
Warrenville, IL 60555

EXAMINER
FANTU, YALKEW

ART UNIT	PAPER NUMBER
2858	

MAIL DATE	DELIVERY MODE
04/09/2010	PAPER

Please find below and/or attached an Office communication concerning this application or proceeding.

The time period for reply, if any, is set in the attached communication.

UNITED STATES PATENT AND TRADEMARK OFFICE

Commissioner for Patents
United States Patent and Trademark Office
P.O. Box 1450
Alexandria, VA 22313-1450
www.uspto.gov

Min Carroll
PO BOX 236
Warrenville IL 60555

In re Application of	:	
Min CARROLL	:	DECISION ON PETITION
Application No. 12/381,871	:	TO MAKE SPECIAL UNDER
Filed: 17 March 2009	:	THE GREEN TECHNOLOGY
Attorney Docket No. N/A	:	PILOT PROGRAM

This is a decision on the petition under 37 CFR 1.102, filed 26 March 2010, to make the above-identified application special under the pilot program for applications pertaining to Green Technologies as set forth 74 Federal Register Notice 64666 (December 8, 2009).

The petition is **DISMISSED**.

If reconsideration of this decision is desired, a petition for reconsideration must be filed within ONE (1) MONTH OR THIRTY (30) DAYS from the mail date of this decision, whichever is longer. No extension of this time limit can be granted under 37 CFR 1.136(a) or (b). The petition for reconsideration should include an exhaustive attempt to provide the lacking item(s) noted below, since, after a decision on the petition for reconsideration, no further reconsideration or review of the matter will be undertaken by the Director.

A grantable petition to make an application special under 37 CFR 1.102 and the pilot program as set forth in 74 FR 64666 must be directed to a nonprovisional application filed under 35 USC 111(a) or be a national stage entry under 35 USC 371, exclusive of any reissue applications and be filed prior to the date of the notice, December 8, 2009.

In order to qualify for special status, the following requirements must be met. 1) The application must be classified in one of the eligible US classifications listed in section VI of the notice. 2) The application must have no more than 3 independent claims and no more than 20 total claims. 3) The application must not contain any multiple dependent claims. 4) The petition must state the basis for seeking special status, i.e., the claimed invention either: A) materially enhances the quality of the environment or B) materially contributes to: i) the discovery or development of renewable energy resources, ii) the more efficient utilization and conservation of energy resources, or iii) greenhouse gas emission reduction. 5) If the disclosure is not clear on its face that the claimed invention materially contributes under category (A) or (B), the petition must be accompanied by a statement by the applicant, assignee, or an attorney/agent registered to practice before the Office explaining how the materiality standard is met. 6) A statement that applicant will agree to make an election without traverse in a telephonic interview if a restriction

requirement is made by the examiner. 7) The petition to make special must be filed electronically. 8) The petition must be filed at least one day prior to the date that a first Office Action appears in the Patent Application Information Retrieval (PAIR) system. 9) The petition must be accompanied by a request for early publication in compliance with 37 CFR 1.219 and include the publication fee as set forth in 37 CFR 1.18(d).

The requirement for a fee for consideration of the petition to make special for applications pertaining to Green Technologies has been waived.

The petition lacks items 2, 3, 4, 7, and 9 above.

In regard to item 2, the application currently has more than 3 independent claims and more than 20 total claims.

In regard to item 3, the application currently contains multiple dependent claims.

In regard to item 4, applicant should note that the instant petition fails to state the basis for the special status (i.e., whether the instant invention (1) materially enhances the quality of the environment or materially contributes to (2) development of renewable energy resources or energy conservation, or (3) greenhouse gas reduction) as required by sections II and III of the notice.

In regard to item 7, the petition was not files via EFS-Web. The filing of the petition by fax does not satisfy this requirement.

In regard to item 9, the petition was not accompanied by the publication fee as set forth in 37 CFR 1.18(d).

Any reconsideration of this decision should be submitted through the USPTO electronic filing system, EFS-Web, and selecting the document description of "Petition for Green Tech Pilot" on the EFS-Web screen.

Telephone inquires concerning this decision should be directed to Lee W. Young at 571-272-4549.

The application is being forwarded to the Technology Center Art Unit 2858 for action on the merits commensurate with this decision.

Lee W. Young
Quality Assurance Specialist
Technology Center 2800

UNITED STATES PATENT AND TRADEMARK OFFICE

Commissioner for Patents
United States Patent and Trademark Office
P.O. Box 1450
Alexandria, VA 22313-1450
www.uspto.gov

ELIZABETH R. HALL
1722 MARYLAND STREET
HOUSTON TX 77006

COPY MAILED

APR 23 2009

OFFICE OF PETITIONS

In re Application of	:	
Tommie Carroll Gipson	:	
Application No. 12/381,939	:	DECISION ON PETITION
Filed: March 18, 2009	:	TO MAKE SPECIAL UNDER
Attorney Docket No. CTSI-P009US	:	37 CFR 1.102(c)(1)
	:	

This is a decision on the petition under 37 CFR 1.102(c)(1), filed March 18, 2009, to make the above-identified application special based on applicant's age as set forth in M.P.E.P. § 708.02, Section IV.

The petition is **GRANTED**.

A grantable petition to make an application special under 37 CFR 1.102(c)(1) and MPEP § 708.02, Section IV: Applicant's Age must be accompanied by evidence showing that at least one of the applicants is 65 years of age, or more, such as a birth certificate or a statement by applicant. No fee is required

The instant petition includes a statement by the applicant. Accordingly, the above-identified application has been accorded "special" status.

Telephone inquiries concerning this decision should be directed to JoAnne Burke at 571-272-4584.

All other inquiries concerning either the examination or status of the application should be directed to the Technology Center.

The application is being forwarded to the Technology Center Art Unit 3672 for action on the merits commensurate with this decision.

Ramesh Krishnamurthy

Ramesh Krishnamurthy
Petitions Examiner
Office of Petitions

UNITED STATES PATENT AND TRADEMARK OFFICE

COMMISSIONER FOR PATENTS
UNITED STATES PATENT AND TRADEMARK OFFICE
P.O. BOX 1450
ALEXANDRIA, VA 22313-1450
www.uspto.gov

Robert L. Rispoli
Precision Combustion, Inc.
410 Sackett Point Road
North Haven CT 06473

MAILED

MAY 03 2010

OFFICE OF PETITIONS

In re Application of	:	
William C. Pfefferle	:	
Application No. 12/381,949	:	DECISION ON PETITION
Filed: March 17, 2009	:	TO MAKE SPECIAL UNDER
Attorney Docket No. MOI 307	:	37 CFR 1.102(c)(1)
	:	

This is a decision on the petition under 37 CFR 1.102(c)(1), filed February 16, 2010, to make the above-identified application special based on applicant's age as set forth in M.P.E.P. § 708.02, Section IV.

The petition is **GRANTED**.

A grantable petition to make an application special under 37 CFR 1.102(c)(1) and MPEP § 708.02, Section IV: Applicant's Age must be accompanied by evidence showing that at least one of the applicants is 65 years of age, or more, such as a birth certificate or a statement by applicant. No fee is required

The instant petition includes a statement by an attorney on behalf of the inventor attesting to his age. The above-identified application has been accorded "special" status.

Telephone inquiries concerning this decision should be directed to Kimberly Inabinet at 571-272-4618.

All other inquiries concerning either the examination or status of the application should be directed to the Technology Center.

The application is being forwarded to the Technology Center Art Unit 1795 for action on the merits commensurate with this decision.

/Kimberly Inabinet/

Kimberly Inabinet
Petitions Examiner
Office of Petitions

UNITED STATES PATENT AND TRADEMARK OFFICE

Commissioner for Patents
United States Patent and Trademark Office
P.O. Box 1450
Alexandria, VA 22313-1450
www.uspto.gov

BC

November 4, 2009

In re application of	:	DECISION ON REQUEST TO
Yi Cao et al.	:	PARTICIPATE IN PATENT
Serial No. 12/381,979	:	PROSECUTION HIGHWAY
Filed: March 18, 2009	:	PROGRAM AND
For: MANUFACTURING PROCESS OF	:	PETITION TO MAKE SPECIAL
ELECTRODES FOR ELECTROLYSIS	:	UNDER 37 CFR 1.102(d)

This is a decision on the request to participate in the Patent Prosecution Highway (PPH) program and the petition under 37 CFR 1.102(d) to make the above-identified application special filed September 16, 2009.

The request and petition are **GRANTED**.

A grantable request to participate in the PPH program and petition to make special require:

(1) The U.S. application must validly claim priority under 35 U.S.C. 119(a) to one or more applications filed in the JPO, note where the JPO application with similar claims is not the same application from which the U.S. application claims priority that the applicant must identify the relationship between the JPO application with similar claims and the JPO priority application;

(2) Applicant must submit a copy of:
   a. The allowable/patentable claim(s) from the JPO application(s) or if a copy of the allowable/patentable claims is available via the Dossier Access System (DAS) applicant may request the USPTO to obtain a copy from DAS; however, if the USPTO is unable to obtain a copy from the DAS, the applicant will be required to submit a copy;
   b. An English translation of the allowable/ patentable claim(s), if applicable; and
   c. A statement that the English translation is accurate, if applicable;

(3) Applicant must:
   a. Ensure all the claims in the U.S. application must sufficiently correspond or be amended to sufficiently correspond to the allowable/patentable claim(s) in the JPO application(s); and
   b. Submit a claims correspondence table in English;

(4) Examination of the U.S. application has not begun;

(5) Applicant must submit:

a. Documentation of prior office action:
   i. a copy of the office action(s) just prior to the "Decision to Grant a Patent" from each of the JPO application(s) containing the allowable/patentable claims(s) or
   ii. if the allowable/patentable claim(s) are from "Notification of Reasons for Refusal" then the Notification of Reasons for Refusal or
   iii. if the JPO application is a first action allowance then no office action from the JPO is necessary should be indicated on the request/petition form;
   Further, if a copy of the documents from (i) or (ii) is available via the Dossier Access System (DAS), applicant may request the USPO obtain a copy from the DAS; however, if the USPTO is unable to obtain a copy of the DAS, the applicant will be required to submit a copy;
b. An English language translation of the JPO Office action from (5)(a)(i)-(ii) above if applicable; and
c. A statement that the English translation is accurate;

(6) Applicant must submit:
a. An IDS listing the documents cited by the JPO examiner in the JPO office action (unless already submitted in this application)
b. Copies of documents except U.S. patents or U.S. patent application publications (unless already submitted in this application); and

(7) The required petition fee under 37 CFR 1.17(h).

The request to participate in the PPH program and petition comply with the above requirements. Accordingly, the above-identified application has been accorded "special" status.

The application is being forwarded to the examiner for action on the merits commensurate with this decision.

Any inquiry regarding this decision should be directed to Blaine Copenheaver, Quality Assurance Specialist, at (571) 272-1156.

All other inquiries concerning the examination or status of the application is accessible in the PAIR system at http://www.uspto.gov/ebc/index.html.

/Blaine Copenheaver/

Blaine Copenheaver
Quality Assurance Specialist
Technology Center 1700

UNITED STATES PATENT AND TRADEMARK OFFICE

Commissioner for Patents
United States Patent and Trademark Office
P.O. Box 1450
Alexandria, VA 22313-1450
www.uspto.gov

MAILED

MAR 2 6 2010

OFFICE OF PETITIONS

NIXON & VANDERHYE, PC
901 NORTH GLEBE ROAD, 11TH FLOOR
ARLINGTON VA 22203

In re Application of	:	
Hackert et al.	:	DECISION REFUSING STATUS
Application No. 12/382,006	:	UNDER 37 CFR 1.47(a)
Filed: March 5, 2009	:	
Attorney Docket No. ARC-1328-51	:	

This is in response to the petition under 37 CFR 1.47(a), filed January 29, 2010.

The petition is dismissed.

Rule 47 applicant is given TWO MONTHS from the mailing date of this decision to reply, correcting the below-noted deficiencies. Any reply should be entitled "Request for Reconsideration of Petition Under 37 CFR 1.47(a)," and should only address the deficiencies noted below, except that the reply may include an oath or declaration executed by the non-signing inventor. **FAILURE TO RESPOND WILL RESULT IN ABANDONMENT OF THE APPLICATION.** Any extensions of time will be governed by 37 CFR 1.136(a).

A grantable petition under 37 CFR 1.47(a) requires: (1) proof that the non-signing inventor cannot be reached or refuses to sign the oath or declaration after having been presented with the application papers (specification, claims and drawings); (2) an acceptable oath or declaration in compliance with 35 U.S.C. §§ 115 and 116; (3) the petition fee; and (4) a statement of the last known address of the non-signing inventor. Applicant lacks items (1), and (2) set forth above.

Pursuant to petitioner's request deposit account 14-1140 will be charged the $200.00 petition fee.

As to item (1), rule 47 applicant must demonstrate with documented evidence that an inventor refuses to join in the application after having been presented with the application papers (specification, claims, drawings and oath or declaration). Petitioner has provided evidence that the application papers were presented via return receipt. Although petitioner has provided a copy of the return receipt the Office is unable to ascertain who signed for the application papers. As such the Office cannot find that the inventor's failure to respond can be construed as refusal if it cannot be verified that the application papers were received. Inventor Maas' conclusion that he has no reason to doubt that the address the documents were sent to is his correct address is not sufficient. Petitioner should provide a clear copy of the return receipt and/or state who signed for the application papers. If the papers were not signed for by inventor Tranter it will have to be verified that inventor Tranter continues to receive correspondence at the last known address.

Any evidence that petitioner provides regarding corresponding with the inventor via e-mail must demonstrate that the correspondence was received by the inventor and that the application papers were viewable.

Unless petitioner can show that a copy of the application papers was presented to the non-signing inventor , then petitioner will have to mail a copy of the complete application papers (specification, claims and drawings) to the last known address of the joint inventors , return receipt requested. A cover letter of instructions should accompany the mailing of the application papers setting a deadline or a statement that no response will constitute a refusal. This sort of ultimatum lends support to a finding of refusal by conduct. **The proof of the pertinent events should be made by a statement of someone with firsthand knowledge of the events and should include documentary evidence, such as certified mail return receipt, cover letter of instructions, telegram, etc.** *See* MPEP 409.03(d).

Where there is an express or oral refusal, that fact, along with the time and place of the refusal, must be stated in an affidavit or declaration **by the party to whom the refusal was made.** Where there is a written refusal, a copy of the document(s) evidencing that refusal must be made part of the affidavit or declaration.

When it is concluded by the rule 47 applicant that an omitted inventor's conduct constitutes a refusal, all facts upon which that conclusion is based should be stated in an affidavit or declaration. If there is documentary evidence to support facts alleged in the affidavit or declaration, such evidence must be submitted.

Whenever an omitted inventor gives a reason for refusing to sign the application oath or declaration, that reason should be stated in the affidavit or declaration.

As to item (2), the signature block of inventor Maas contains non-initialed alterations to the declaration. A newly executed declaration without alterations should be provided. Any changes made in ink in the application or oath prior to signing should be initialed and dated by the applicants prior to execution of the oath or declaration. The Office will not consider whether noninitialed and/or nondated alterations were made before or after signing of the oath or declaration but will require a new oath or declaration. See MPEP 605.04(a).

Further correspondence with respect to this matter should be addressed as follows:

By mail: Mail Stop PETITIONS
Commissioner for Patents
Post Office Box 1450
Alexandria, VA 22313-1450

By hand: Customer Service Window
Mail Stop Petitions
Randolph Building
401 Dulany Street
Alexandria, VA 22314

By fax: (571) 273-8300
ATTN: Office of Petitions

Telephone inquiries should be directed to the undersigned at (571) 272-3215.

Charlema Grant
Petitions Attorney
Office of Petitions

UNITED STATES PATENT AND TRADEMARK OFFICE

Commissioner for Patents
United States Patent and Trademark Office
P.O. Box 1450
Alexandria, VA 22313-1450
www.uspto.gov

MAILED

JUN 18 2010

OFFICE OF PETITIONS

NIXON & VANDERHYE, PC
901 NORTH GLEBE ROAD, 11TH FLOOR
ARLINGTON VA 22203

In re Application of	:	
Jurgen Hackert, Paul Tranter, Joost Hubert	:	DECISION GRANTING STATUS
Maas	:	UNDER 37 CFR 1.47(a)
Application No. 12/382, 006	:	
Filed: March 5, 2009	:	
Attorney Docket No. ARC-1328-51	:	
For: METHOD FOR PREPARING A	:	
CONDUCTIVE FEATURE ON A	:	
SUBSTRATE	:	

This is in response to the renewed petition under 37 CFR 1.47(a), filed June 7, 2010.

The petition is **GRANTED.**

Petitioner has shown that the non-signing inventor Tranter has refused to join in the filing of the above-identified application.

The application and papers have been reviewed and found in compliance with 37 CFR 1.47(a). This application is hereby accorded Rule 1.47(a) status.

As provided in 37 CFR 1.47(c), this Office will forward notice of this application's filing to the non-signing inventor at the address given in the petition. Notice of the filing of this application will also be published in the Official Gazette.

To make this reply timely a one month extension of time is required as such deposit account no. 14-1140 will be charged $130.00.

This application is being referred to the Art Unit 1794 for processing in the normal course of business.

Telephone inquiries regarding this decision should be directed to the undersigned at (571) 272-3215.

Charlema Grant
Petitions Attorney
Office of Petitions

UNITED STATES PATENT AND TRADEMARK OFFICE

Commissioner for Patents
United States Patent and Trademark Office
P.O. Box 1450
Alexandria, VA 22313-1450
www.uspto.gov

MAILED

JUN 18 2010

OFFICE OF PETITIONS

Paul Tranter
12 Conway Drive
Melton Mowbray
LE13 iJP Leicetershire
United Kingdom

In re Application of
Jurgen Hackert, Paul Tranter, Joost Hubert Maas
Application No. 12/382, 006
Filed: March 5, 2009
Attorney Docket No. ARC-1328-51
For: METHOD FOR PREPARING A CONDUCTIVE FEATURE ON A SUBSTRATE

Dear Sir:

You are named as a co- inventor in the above-identified United States patent application, filed under the provisions of 35 U.S.C. 116 (United States Code), and 37 CFR 1.47(a), Rules of Practice in Patent Cases. Should a patent be granted on the application you will be designated therein as a co-inventor inventor.

As a named inventor you are entitled to inspect any paper in the file wrapper of the application, order copies of all or any part thereof (at a prepaid cost per 37 CFR 1.19) or make your position of record in the application. Alternatively, you may arrange to do any of the preceding through a registered patent attorney or agent presenting written authorization from you. If you care to join the application, counsel of record (see below) would presumably assist you. Joining the application would entail the filing of an appropriate oath or declaration by you pursuant to 37 CFR 1.63.

Telephone inquiries regarding this communication should be directed to the undersigned at (571) 272-3215. Requests for information regarding your application should be directed to the File Information Unit at (703) 308-2733. Information regarding how to pay for and order a copy of the application, or a specific paper in the application, should be directed to the Certification Division at (571) 272-3150 or 1 (800) 972-6382 (outside the Washington, DC area).

Charlema Grant
Petitions Attorney
Office of Petitions

Cc: NIXON & VANDERHYE, PC
901 NORTH GLEBE ROAD, 11TH FLOOR
ARLINGTON VA 22203

UNITED STATES PATENT AND TRADEMARK OFFICE

Commissioner for Patents
United States Patent and Trademark Office
P.O. Box 1450
Alexandria, VA 22313-1450
www.uspto.gov

MERCHANT & GOULD PC
P.O. BOX 2903
MINNEAPOLIS, MN 55402-0903

MAILED

APR 0 8 2009

OFFICE OF PETITIONS

In re Application of	:	
Lawnie Henderson TAYLOR	:	
Application No. 12/382,071	:	DECISION ON PETITION
Filed: March 9, 2009	:	TO MAKE SPECIAL UNDER
Attorney Docket No. 70178.0008USC3	:	37 CFR 1.102(c)(1)
	:	

This is a decision on the petition under 37 CFR 1.102(c)(1), filed March 9, 2009, to make the above-identified application special based on applicant's age as set forth in M.P.E.P. § 708.02, Section IV.

The petition is **GRANTED**.

A grantable petition to make an application special under 37 CFR 1.102(c)(1) and MPEP § 708.02, Section IV: Applicant's Age must be accompanied by evidence showing that at least one of the applicants is 65 years of age, or more, such as a birth certificate or a statement by applicant. No fee is required

The instant petition includes a copy of applicant's drivers license. Accordingly, the above-identified application has been accorded "special" status.

Telephone inquiries concerning this decision should be directed to the undersigned at 571-272-6735.

All other inquiries concerning either the examination or status of the application should be directed to the Technology Center.

The application is being forwarded to Technology Center Art Unit 1796 for action on the merits commensurate with this decision.

Diane Goodwyn
Petitions Examiner
Office of Petitions

UNITED STATES PATENT AND TRADEMARK OFFICE

Commissioner for Patents
United States Patent and Trademark Office
P.O. Box 1450
Alexandria, VA 22313-1450
www.uspto.gov

MERCHANT & GOULD PC
P.O. BOX 2903
MINNEAPOLIS, MN 55402-0903

MAILED

MAR 26 2009

OFFICE OF PETITIONS

In re Application of	:	
Lawnie H. Taylor	:	
Application No. 12/382,076	:	DECISION ON PETITION
Filed: March 9, 2009	:	TO MAKE SPECIAL UNDER
Attorney Docket No. 70178.0008USC4	:	37 CFR 1.102(c)(1)
	:	

This is a decision on the petition under 37 CFR 1.102(c)(1), filed March 9, 2009, to make the above-identified application special based on applicant's age as set forth in M.P.E.P. § 708.02, Section IV.

The petition is **GRANTED**.

A grantable petition to make an application special under 37 CFR 1.102(c)(1) and MPEP § 708.02, Section IV: Applicant's Age must be accompanied by evidence showing that at least one of the applicants is 65 years of age, or more, such as a birth certificate or a statement by applicant. No fee is required

The instant petition includes a statement from applicant's attorney verifying applicant's age. Accordingly, the above-identified application has been accorded "special" status.

Telephone inquiries concerning this decision should be directed to undersigned at 571-272-1642.

All other inquiries concerning either the examination or status of the application should be directed to the Technology Center.

The application is being referred back to the Office of Patent Application Processing for pre-examination processing. This application will be accorded "special" status once pre-examination processing is complete.

/AMW/
April M. Wise
Petitions Examiner
Office of Petitions

UNITED STATES PATENT AND TRADEMARK OFFICE

Commissioner for Patents
United States Patent and Trademark Office
P.O. Box 1450
Alexandria, VA 22313-1450
www.uspto.gov

MERCHANT & GOULD PC
P.O. BOX 2903
MINNEAPOLIS, MN 55402-0903

MAILED

MAR 26 2009

OFFICE OF PETITIONS

In re Application of	:	
Lawnie H. Taylor	:	
Application No. 12/382,136	:	DECISION ON PETITION
Filed: March 9, 2009	:	TO MAKE SPECIAL UNDER
Attorney Docket No. 70178.0008USC2	:	37 CFR 1.102(c)(1)
	:	

This is a decision on the petition under 37 CFR 1.102(c)(1), filed March 9, 2009, to make the above-identified application special based on applicant's age as set forth in M.P.E.P. § 708.02, Section IV.

The petition is **GRANTED**.

A grantable petition to make an application special under 37 CFR 1.102(c)(1) and MPEP § 708.02, Section IV: Applicant's Age must be accompanied by evidence showing that at least one of the applicants is 65 years of age, or more, such as a birth certificate or a statement by applicant. No fee is required

The instant petition includes a statement from applicant's attorney verifying applicant's age. Accordingly, the above-identified application has been accorded "special" status.

Telephone inquiries concerning this decision should be directed to undersigned at 571-272-1642.

All other inquiries concerning either the examination or status of the application should be directed to the Technology Center.

The application is being referred back to the Office of Patent Application Processing for pre-examination processing. This application will be accorded "special" status once pre-examination processing is complete.

/AMW/
April M. Wise
Petitions Examiner
Office of Petitions

UNITED STATES PATENT AND TRADEMARK OFFICE

UNITED STATES DEPARTMENT OF COMMERCE
United States Patent and Trademark Office
Address: COMMISSIONER FOR PATENTS
P.O. Box 1450
Alexandria, Virginia 22313-1450
www.uspto.gov

APPLICATION NO.	FILING DATE	FIRST NAMED INVENTOR	ATTORNEY DOCKET NO.	CONFIRMATION NO.
12/382,191	03/10/2009	Osamu Fukawatase	26B-151	5430

7590 10/22/2009

POSZ LAW GROUP, PLC
12040 SOUTH LAKES DRIVE
SUITE 101
RESTON, VA 20191

EXAMINER

ART UNIT	PAPER NUMBER
3616	

MAIL DATE	DELIVERY MODE
10/22/2009	PAPER

DECISION GRANTING PETITION UNDER 37 CFR 1.138(d)

The declaration of express abandonment is recognized

This is in response to the petition under 37 CFR 1.138(d), requesting for a refund of any previously paid search fee and excess claims fee in the above-identified application.

The petition is granted.

The express abandonment is recognized. Any previously paid search fee and excess claims fee are hereby refunded.

Telephone inquiries should be directed to the Office of Data Management at (571) 272-4200.

Nioni Farmer

Patent Publication Branch
Office of Data Management

Repln. Ref: 10/22/2009 NFARMER 0017215200
DAN:501147 Name/Number:12382191
FC: 9204 [illegible] CR

Adjustment date: 10/22/2009 NFARMER
05/06/2009 SMOHAMME 00000015 12382191
02 FC:1111 -540.00 OP

FORM PET651G (Rev. 08/07)

UNITED STATES PATENT AND TRADEMARK OFFICE

UNITED STATES DEPARTMENT OF COMMERCE
United States Patent and Trademark Office
Address: COMMISSIONER FOR PATENTS
P.O. Box 1450
Alexandria, Virginia 22313-1450
www.uspto.gov

APPLICATION NO.	FILING DATE	FIRST NAMED INVENTOR	ATTORNEY DOCKET NO.	CONFIRMATION NO.
12/382,288	03/12/2009	Hirofumi NAKATOMI	062533.00096	6914

32294 7590 06/24/2010
SQUIRE, SANDERS & DEMPSEY L.L.P.
8000 TOWERS CRESCENT DRIVE
14TH FLOOR
VIENNA, VA 22182-6212

EXAMINER

ART UNIT	PAPER NUMBER
3766	

NOTIFICATION DATE	DELIVERY MODE
06/24/2010	ELECTRONIC

Please find below and/or attached an Office communication concerning this application or proceeding.

The time period for reply, if any, is set in the attached communication.

Notice of the Office communication was sent electronically on above-indicated "Notification Date" to the following e-mail address(es):

IPGENERALTYC@SSD.COM
SWHITNEY@SSD.COM

UNITED STATES PATENT AND TRADEMARK OFFICE

Commissioner for Patents
United States Patent and Trademark Office
P.O. Box 1450
Alexandria, VA 22313-1450
www.uspto.gov

SQUIRE, SANDERS & DEMPSEY L.L.P.
8000 TOWERS CRESCENT DRIVE
14TH FLOOR
VIENNA VA 22182-6212

In re Application of	:	
NAKATOMI, HIROFUMI et al	:	DECISION ON REQUEST TO
Application No. 12/382,288	:	PARTICIPATE IN PATENT
Filed: March 12, 2009	:	PROSECUTION HIGHWAY
Attorney Docket No. 062533.00096	:	PROGRAM AND PETITION
For: MONITORING ELECTRODE FOR MONITORING DORSAL COCHLEAR NUCLEUS ACTION POTENTIALS AND MONITORING DEVICE FOR MONITORING DORSAL COCHLEAR NUCLEUS ACTION POTENTIALS	:	37 CFR 1.102(d)

This is a decision on the request to participate in the Patent Prosecution Highway (PPH) program and the petition under 37 CFR 1.102(d), filed June 22, 2010 to make the above-identified application special.

The request and petition are **GRANTED**.

A grantable request to participate in the PPH pilot program and petition to make special require:

(1) The U.S. application must validly claim priority under 35 U.S.C. 119(a) to one or more applications filed in the JPO;
(2) Applicant must submit a copy of the allowable/patentable claim(s) from the JPO application(s) along with an English translation thereof and a statement that the English translation is accurate;
(3) All the claims in the U.S. application must sufficiently correspond or be amended to sufficiently correspond to the allowable/patentable claim(s) in the JPO application(s);
(4) Examination of the U.S. application has not begun;
(5) Applicant must submit a copy of all the office actions from each of the JPO application(s) containing the allowable/patentable claim(s) along with an English translation thereof and a statement that the English translation is accurate and;
(6) Applicant must submit an IDS listing the documents cited by the JPO examiner in the JPO office action along with copies of documents except U.S. patents or U.S. patent application publications.

In light of the petition being properly submitted, the request to participate in the PPH program and the petition comply with the above requirements. Accordingly, the above-identified application has been accorded "special" status.

The applicant is encouraged to cite and submit all relevant prior art references, if any, to facilitate examination in this application.

Telephone inquiries concerning this decision should be directed to Henry C. Yuen at 571-272-4856. All other inquiries concerning the examination or status of the application should be directed to Carl Layno, the SPE of Art Unit 3766, and 571-272-24949 for Class 607/057 and also accessible in the PAIR system at http://www.uspto.gov/ebc.index.html.

Petition is **granted**.

/Henry C. Yuen/

Henry C. Yuen, Special Programs Examiner
Technology Center 3700 – Mechanical Engineering,
Manufacturing and Products
571-272-4856

UNITED STATES PATENT AND TRADEMARK OFFICE

UNITED STATES DEPARTMENT OF COMMERCE
United States Patent and Trademark Office
Address: COMMISSIONER FOR PATENTS
P.O. Box 1450
Alexandria, Virginia 22313-1450
www.uspto.gov

APPLICATION NO.	FILING DATE	FIRST NAMED INVENTOR	ATTORNEY DOCKET NO.	CONFIRMATION NO.
12/382,294	03/12/2009	Sung Jun Park	8737.124.00	9130

30827 7590 10/29/2009
MCKENNA LONG & ALDRIDGE LLP
1900 K STREET, NW
WASHINGTON, DC 20006

EXAMINER

ART UNIT	PAPER NUMBER
2431	

MAIL DATE	DELIVERY MODE
10/29/2009	PAPER

Please find below and/or attached an Office communication concerning this application or proceeding.

The time period for reply, if any, is set in the attached communication.

UNITED STATES PATENT AND TRADEMARK OFFICE

Commissioner for Patents
United States Patent and Trademark Office
P.O. Box 1450
Alexandria, VA 22313-1450
www.uspto.gov

McKenna, Long & Aldridge LLP
1900 K Street, NW
Washington DC 20006

In re Application of: Sung Jun Park, et al.
Application No. 12382294
Filed: March 12, 2009
For: **RANDOM ACCESS METHOD FOR IMPROVING SCRAMBLING EFFICIENCY**

DECISION ON REQUEST TO PARTICIPATE IN PATENT PROSECUTION HIGHWAY PROGRAM AND PETITION TO MAKE SPECIAL UNDER 37 CFR 1.102(d)

MAILED

OCT 29 2009

DIRECTOR OFFICE
TECHNOLOGY CENTER 2400

This is a decision on the request to participate in the Patent Prosecution Highway (PPH) program and the petition under 37 CFR 1.102(d), filed September 2, 2009, to make the above-identified application special.

The petition is **GRANTED.**

A grantable request to participate in the PPH program and petition to make special require:

(1) The U.S. application must validly claim priority under 35 U.S.C. 119(a) to one or more applications filed in the KIPO;

(2) Applicant must submit a copy of the allowable/patentable claim(s) from the KIPO application(s) along with an English translation thereof and a statement that the English translation is accurate;

(3) All the claims in the U.S. application must sufficiently correspond or be amended to sufficiently correspond to the allowable/patentable claim(s) in the KIPO application(s);

(4) Examination of the U.S. application has not begun;

(5) Applicant must submit a copy of all the office actions from each of the KIPO application(s) containing the allowable/patentable claim(s) along with an English translation thereof and a statement that the English translation is accurate;

(6) Applicant must submit an IDS listing the documents cited by the KIPO examiner in the KIPO office action along with copies of documents except U.S. patents or U.S. patent application publications; and

(7) The required petition fee under 37 CFR 1.17(h).

The request to participate in the PPH program and petition are found to comply with the above requirements. Accordingly, the above-identified application has been accorded "special" status.

Telephone inquiries concerning this decision should be directed to Hassan Kizou at 571-272-3088

All other inquiries concerning the examination or status of the application is accessible in the PAIR system at http://www.uspto.gov/ebc/index.html.

The application is being forwarded to the examiner for action on the merits commensurate with this decision.

Hassan Kizou
Quality Assurance Specialist, Technology Center 2400

UNITED STATES PATENT AND TRADEMARK OFFICE

UNITED STATES DEPARTMENT OF COMMERCE
United States Patent and Trademark Office
Address: COMMISSIONER FOR PATENTS
P.O. Box 1450
Alexandria, Virginia 22313-1450
www.uspto.gov

APPLICATION NO.	FILING DATE	FIRST NAMED INVENTOR	ATTORNEY DOCKET NO.	CONFIRMATION NO.
12/382,303	03/12/2009	Sung Jun Park	8737.123.00	1648

30827 7590 07/20/2009
MCKENNA LONG & ALDRIDGE LLP
1900 K STREET, NW
WASHINGTON, DC 20006

EXAMINER

ART UNIT	PAPER NUMBER
2112	

MAIL DATE	DELIVERY MODE
07/20/2009	PAPER

Please find below and/or attached an Office communication concerning this application or proceeding.

The time period for reply, if any, is set in the attached communication.

UNITED STATES PATENT AND TRADEMARK OFFICE

Commissioner for Patents
United States Patent and Trademark Office
P.O. Box 1450
Alexandria, VA 22313-1450
www.uspto.gov

MCKENNA LONG & ALDRIDGE LLP
1900 K STREET, NW
WASHINGTON DC 20006

In re Application of: PARK et al.
Application No. 12/382,303
Filed: March 12, 2009
Atty. Docket No.: 8737.123.00
For: METHOD OF PROCESSING HARQ BY CONSIDERING MEASUREMENT GAP

DECISION ON REQUEST TO PARTICIPATE IN PATENT PROSECUTION HIGHWAY PILOT PROGRAM AND PETITION TO MAKE SPECIAL UNDER 37 CFR 1.102(d)

This is a decision on the request to participate in the Patent Prosecution Highway (PPH) program and the petition under 37 CFR 1.102(d), filed June 2, 2009, to make the above- identified application special.

The request and petition are **GRANTED**.

A grantable request to participate in the PPH program and petition to make special require:

1. The U.S. application must validly claim priority under 35 U.S.C. 119(a) to one or more applications filed in the KIPO, note where the KIPO application with similar claims is not the same application from which the U.S. application claims priority that the applicant must identify the relationship between the KIPO application with similar claims and the KIPO priority application;

2. Applicant must submit a copy of:
   a. The allowable/patentable claim(s) from the KIPO application(s) or if a copy of the allowable/patentable claims is available via the Dossier Access System (DAS) applicant may request the USPTO obtain a copy from the DAS, however if the USPTO is unable to obtain a copy from the DAS the applicant will be required to submit a copy;
   b. An English translation of the allowable/patentable claim(s) and
   c. A statement that the English translation is accurate;

3. Applicant must
   a. Ensure all the claims in the U.S. application must sufficiently correspond or be amended to sufficiently correspond to the allowable/patentable claim(s) in the KIPO application(s) and
   b. Submit a claims correspondence table in English;

4. Examination of the U.S. application has not begun;

5. Applicant must submit:
   a. Documentation of prior office action:
      i. a copy of the office action(s)just prior to the "Decision to Grant a Patent" from each of the KIPO application(s) containing the allowable/patentable claim(s) or
      ii. if the allowable/patentable claims(s) are from a "Notification of Reasons for Refusal" then the Notification of Reasons for Refusal or
      iii. if the KIPO application is a first action allowance then no office action from the KIPO is necessary should be indicated on the request/petition form; Further, if a copy of the documents from a or b above is available via the Dossier Access System (DAS) applicant may request the USPTO obtain a copy from the DAS, however if the USPTO is unable to obtain a copy from the DAS the applicant will be required to submit a copy;

   b. An English language translation of the KIPO Office action from (5)(a)(i)-(ii) above;
   c. A statement that the English translation is accurate;

6. Applicant must submit:
   a. An IDS listing the documents cited by the KIPO examiner in the KIPO office action (unless already submitted in this application)
   b. Copies of the documents except U.S. patents or U.S. patent application publications (unless already submitted in this application);

7. The required petition fee under 37 CFR 1.17(h).

The request to participate in the PPH program and petition comply with the above requirements, and accordingly, the above-identified application has been accorded "special" status.

The request and petition are **GRANTED**.

Telephone inquiries concerning this decision should be directed to Mano Padmanabhan at 571-272-4210.

All other inquiries concerning the examination or status of the application is accessible in the PAIR system at http://www.uspto.gov/ebc/index.html.

The application is being forwarded to the examiner for action on the merits commensurate with this decision.

/Mano Padmanabhan/

Mano Padmanabhan
Quality Assurance Specialist,
Technology Center 2100, Workgroup 2180
571-272-4210

UNITED STATES PATENT AND TRADEMARK OFFICE

Commissioner for Patents
United States Patent and Trademark Office
P.O. Box 1450
Alexandria, VA 22313-1450
www.uspto.gov

MAILED

JUN 30 2010

OFFICE OF PETITIONS

JACOBSON HOLMAN PLLC
400 SEVENTH STREET N.W.
SUITE 600
WASHINGTON, DEC 20004

Applicant: Schlingensiepen, et al.
Appl. No. 12/382,415
Filing Date: March 16, 2009
Title: Mixture Comprising an Inhibitor or Suppressor of a Gene and a Molecule Binding to an Expression Product of That Gene
Attorney Docket No.: P8119US1
Pub. No.: US 2009/0285817 A1
Pub. Date: November 11, 2009

This is a decision on the request for a corrected patent application publication under 37 CFR 1.221(b), received on January 8, 2010, for the above-identified application

The request is DISMISSED.

Applicant requests that the application be republished because the patent application publication contains material errors on the front page of the publication wherein the inventor's name "Karl-Hermann (two "N's") Schlingensiepen" was misprinted as "Karl-Herman (one "N") Schlingensiepen" and the assignee's name "Biognostik Gesellischaft", was misprinted as "Biognostik Geselischaft'.

37 CFR 1.221 (b) is applicable "only when the Office makes a material mistake which is apparent from Office records.... Any request for a corrected publication or revised patent application publication other than provided as provided in paragraph (a) of this section must be filed within two months from the date of the patent application publication. This period is not extendable." A material mistake must affect the public's ability to appreciate the technical disclosure of the patent application publication, to determine the scope of the patent application publication, or to determine the scope of the provisional rights that an applicant may seek to enforce upon issuance of a patent. [1]

[1] Changes to Implement Eighteen-Month Publication of Patent Applications, 65 FR 57023, 57038 (Sept. 20, 2000), 1239, Off. Gaz. Pat. Office Notices 63, 75 (Oct. 10, 2000) (final rule).

The assignment information was printed, as the information was provided on the transmittal letter on filing.[2]

The error on the front page of the publication wherein the first inventor's name was printed incorrectly may be Office error, but it is not a material Office error under 37 CFR 1.221. The misprinting of the inventor's does not affect the understanding of the application. The mistake does not affect the public's ability to appreciate the technical disclosure of the patent application publication, or determine the scope of the patent application publication or determine the scope of the provisional rights that an applicant may seek to enforce upon issuance of a patent.

On May 4, 2009 and August 11, 2009, a Filing Receipt was mailed by the Office, which improperly listed the inventor's name and the assignee. To avoid this type of problem in the future, applicant's representative should make request a corrected filing receipt prior to publication of the application.

The applicant is advised that a "request for republication of an application previously published" may be filed under 37 CFR 1.221(a). Such a request for republication "must include a copy of the application compliance with the Office's electronic filing system requirements and be accompanied by the publication fee set forth in § 1.18(d) and the processing fee set forth in § 1.17(i)." If the request for republication does not comply with the electronic filing system requirements, the republication will not take place and the publication fee set forth in § 1.18(d) will be refunded. The processing fee will be retained.

A guide for filing a request for a Pre-Grant Publication, such as a request for republication, may be found on the link below:

http://www.uspto.gov/ebc/portal/tutorials.htm

Any request for republication under 37 CFR 1.221(a), must be submitted via the EFS system, as a "Pre-Grant Publication".

Inquiries relating to this matter may be directed to Mark Polutta at (571) 272-7709.

Mark Polutta
Senior Legal Advisor
Office of Patent Legal Administration
Office of the Deputy Commissioner
for Patent Examination Policy

[2] See 37 CFR 1.215, MPEP 1122 and Comment 59, Changes to Implement Eighteen-Month Publication of Patent Applications, 65 FR 57023, 57047 (Sept. 20, 2000), 1239 Off. Gaz. Pat. Office Notices 63, 84 (Oct. 10, 2000) (final rule).

UNITED STATES PATENT AND TRADEMARK OFFICE

UNITED STATES DEPARTMENT OF COMMERCE
United States Patent and Trademark Office
Address: COMMISSIONER FOR PATENTS
P.O. Box 1450
Alexandria, Virginia 22313-1450
www.uspto.gov

APPLICATION NO.	FILING DATE	FIRST NAMED INVENTOR	ATTORNEY DOCKET NO.	CONFIRMATION NO.
12/382,464	03/17/2009	Seong-Hun Choo	301/010 Cont	6882

7590 07/23/2010

LEE & MORSE, P.C.
3141 FAIRVIEW PARK DRIVE
SUITE 500
FALLS CHURCH, VA 22042

EXAMINER
RALEIGH, DONALD L

ART UNIT	PAPER NUMBER
2879	

MAIL DATE	DELIVERY MODE
07/23/2010	PAPER

DECISION GRANTING PETITION UNDER 37 CFR 1.138(d)

The declaration of express abandonment is recognized

This is in response to the petition under 37 CFR 1.138(d), requesting for a refund of any previously paid search fee and excess claims fee in the above-identified application.

The petition is granted.

The express abandonment is recognized. Any previously paid search fee and excess claims fee are hereby refunded.

Telephone inquiries should be directed to the Office of Data Management at (571) 272-4200.

Patent Publication Branch
Office of Data Management

Adjustment date: 07/23/2010 NFARMER
03/16/2009 SNGRAMME 02000030 12382464
02 FC:1111 -543.30 OP

FORM PET651G (Rev. 08/07)

UNITED STATES PATENT AND TRADEMARK OFFICE

Commissioner for Patents
United States Patent and Trademark Office
P.O. Box 1450
Alexandria, VA 22313-1450
www.uspto.gov

STAAS & HALSEY LLP
SUITE 700
1201 NEW YORK AVENUE, N.W.
WASHINGTON DC 20005

MAILED

APR 12 2010

OFFICE OF PETITIONS

In re Application of	:	
Takeshi Hoshida	:	
Application No. 12/382,621	:	ON PETITION
Filed: March 19, 2009	:	
Attorney Docket No. **1344.1168D**	:	

This is a decision on the petition under the unintentional provisions of 37 CFR 1.137(b), filed January 8, 2010, to revive the above-identified application.

The petition is **GRANTED**.

The application became abandoned for failure to reply in a timely manner to the Notice to File Corrected Application Papers (Notice), mailed April 21, 2009. The Notice set a period for reply of two (2) months from the mail date of the Notice. No extensions of time under the provisions of 37 CFR 1.136(a) were obtained. Accordingly, the application became abandoned on November 4, 2008.

The petition satisfies the requirements of 37 CFR 1.137(b) in that petitioner has supplied (1) the reply in the form of a substitute specification, (2) the petition fee of $1,620 (3) a proper statement of unintentional delay.

Telephone inquiries concerning this decision should be directed to JoAnne Burke at 571-272-4584.

This application is being referred to the Office of Patent Application Processing.

JoAnne Burke
Petitions Examiner
Office of Petitions

UNITED STATES PATENT AND TRADEMARK OFFICE

Commissioner for Patents
United States Patent and Trademark Office
P.O. Box 1450
Alexandria, VA 22313-1450
www.uspto.gov

WENDEROTH, LIND & PONACK, L.LP.
1030 15TH STREET, N.W.,
SUITE 400 EAST
WASHINGTON DC 20005-1503

MAILED

SEP 18 2009

OFFICE OF PETITIONS

In re Application of
Tsuneo Yasuma et al
Application No. 12/382,622
Filed: March 19, 2009
Attorney Docket No. 2009_0400

DECISION GRANTING PETITION

This is a decision on the petition filed July 6, 2009 which is being treated under 37 CFR 1.53(e), stating that the application papers consisting of 577 pages and 1 page of Sequence Listing were deposited in the USPTO on March 19, 2009.

The petition is **granted**.

The application was deposited on March 19, 2009. However, on May 4, 2009, the Office of Patent Application Processing mailed a "Notice To File Corrected Application Papers," stating that pages 126, 269-271, 346-348 of the specification (description and claims) were omitted from the application on filing.

In response, on July 6, 2009, the instant petition and a copy of the above of the specification were submitted. The papers were accompanied by a copy of applicant's postcard receipt that acknowledges receipt of: Specification, Claims and Abstract (577 pages) on March 19, 2009. A review of the application file indicates the presence of only (566 pages of specification and 4 pages of claims) with pages, 126, 269-271, 346-348 missing.

MPEP 503 states that "A postcard receipt which itemizes and properly identifies the papers which are being filed serves as prima facie evidence of receipt in the PTO of all the items listed thereon on the date stamped thereon by the PTO." Accordingly, since the evidence supports the fact that pages 126, 269-271 and pages 346-348 of the specification were in fact present on filing, the Notice mailed May 4, 2009 is vacated.

Since pages 126, 269-271 and pages 346-348 of the specification cannot be located in the Office, the copy of the above pages supplied on July 6, 2009 will be used for processing and examination purposes.

This matter is being referred to the Office of Patent Application Processing for pre-examination processing, and for an indication that the above missing pages were included on filing and for mailing of a corrected filing receipt.

Telephone inquiries concerning this matter may be directed to the undersigned at (571) 272-3208.

/Karen Creasy/
Karen Creasy
Petitions Examiner
Office of Petitions

UNITED STATES PATENT AND TRADEMARK OFFICE

Commissioner for Patents
United States Patent and Trademark Office
P.O. Box 1450
Alexandria, VA 22313-1450
www.uspto.gov

Law Office of Jack V. Musgrove
(Clear Channel Communications)
2911 Briona Wood Lane
Cedar Park TX 78613

MAILED

JUN 07 2010

OFFICE OF PETITIONS

In re Application of
Schuster, Basu, Ferry, Jellison, Gable, Murray
Application No.: 12/382,634
Filed: March 19, 2009
Attorney Docket No: 105-LAN-01-2009
For: **REAL TIME INSERION AND REPORTING OF MEDIA CONTENT**

: DECISION ACCORDING
: RULE 47(a) STATUS

This is in response to the "Petition to File Application When One Inventor Refuses to Sign the Oath Under 37 CFR 1.48(a) , which is being treated as a petition under 37 CFR 1.47(a), filed March 11, 2010.

The petition is **GRANTED**.

The above-identified application and papers have been reviewed and found in compliance with 37 CFR 1.47(a). This application is hereby accorded Rule 1.47(a) status.

The above-cited application was filed on March 19, 2009, without a properly executed declaration. The instant petition was filed on March 11, 2010.

Petitioner has shown that inventor Gable is constructively refusing to join the prosecution of the application. The above-identified application and papers have been reviewed and found in compliance with 37 CFR 1.47(a). This application is hereby accorded Rule 1.47(a) status.

As provided in Rule 1.47(c), this Office will forward notice of this application's filing to the non-signing inventor at the addresses given in the petition. Notice of the filing of this application will also be published in the Official Gazette.

This application will be directed to the Office of Patent Application Processing for further processing.

Telephone inquiries regarding this decision should be directed to the undersigned at (571) 272-3222.

Kenya A. McLaughlin
Petitions Attorney
Office of Petitions

UNITED STATES PATENT AND TRADEMARK OFFICE

UNITED STATES DEPARTMENT OF COMMERCE
United States Patent and Trademark Office
Address: COMMISSIONER FOR PATENTS
P.O. Box 1450
Alexandria, Virginia 22313-1450
www.uspto.gov

APPLICATION NO.	FILING DATE	FIRST NAMED INVENTOR	ATTORNEY DOCKET NO.	CONFIRMATION NO.
12/382,673	03/20/2009	Sung Jun Park	8737.130.00	6702

30827 7590 12/30/2009
MCKENNA LONG & ALDRIDGE LLP
1900 K STREET, NW
WASHINGTON, DC 20006

EXAMINER
BOST, DWAYNE D

ART UNIT	PAPER NUMBER
2617	

MAIL DATE	DELIVERY MODE
12/30/2009	PAPER

Please find below and/or attached an Office communication concerning this application or proceeding.

The time period for reply, if any, is set in the attached communication.

UNITED STATES PATENT AND TRADEMARK OFFICE

Commissioner for Patents
United States Patent and Trademark Office
P.O. Box 1450
Alexandria, VA 22313-1450
www.uspto.gov

MCKENNA LONG & ALDRIDGE LLP
1900 K STREET, NW
WASHINGTON DC 20006

In re Application of	:	
PARK, SUNG JUN et al.	:	DECISION ON REQUEST TO
Application No. 12/382,673	:	PARTICIPATE IN PATENT
Filed: March 30, 2009	:	PROSECUTION HIGHWAY
Attorney Docket No.: **8737.130.00**	:	PROGRAM AND PETITION
	:	TO MAKE SPECIAL UNDER
	:	37 CFR 1.102(d)

This is a decision on the request to participate in the Patent Prosecution Highway (PPH) program and the petition under 37 CFR 1.102(d), filed October 30, 2009, to make the above-identified application special.

The request and petition are **GRANTED**.

A grantable request to participate in the PPH program and petition to make special require:

(1) The U.S. application must validly claim priority under 35 U.S.C. 119(a) to one or more applications filed in the KIPO;
(2) Applicant must submit a copy of the allowable/patentable claim(s) from the KIPO application(s) along with an English translation thereof and a statement that the English translation is accurate;
(3) All the claims in the U.S. application must sufficiently correspond or be amended to sufficiently correspond to the allowable/patentable claim(s) in the KIPO application(s);
(4) Examination of the U.S. application has not begun;
(5) Applicant must submit a copy of all the office actions from each of the KIPO application(s) containing the allowable/patentable claim(s) along with an English translation thereof and a statement that the English translation is accurate;
(6) Applicant must submit an IDS listing the documents cited by the KIPO examiner in the KIPO office action along with copies of documents except U.S. patents or U.S. patent application publications; and
(7) The required petition fee under 37 CFR 1.17(h).

The request to participate in the PPH program and petition comply with the above requirements. Accordingly, the above-identified application has been accorded "special" status.

Telephone inquiries concerning this decision should be directed to Doris To at 571-272-7629.

All other inquiries concerning the examination or status of the application should be directed to Patent Application Information Retrieval (PAIR) system.

The application is being forwarded to the examiner for action on the merits commensurate with this decision.

/Doris To/

Doris To
Quality Assurance Specialist
Technology Center 2600
Communications

D2o

UNITED STATES PATENT AND TRADEMARK OFFICE

Commissioner for Patents
United States Patent and Trademark Office
P.O. Box 1450
Alexandria, VA 22313-1450
www.uspto.gov

WALTER OTTESEN
PO BOX 4026
GAITHERSBURG MD 20885-4026

MAILED

AUG 13 2009

OFFICE OF PETITIONS

In re Application of	:	
Walter, et al.	:	DECISION REFUSING STATUS
Application No. 12/382,765	:	UNDER 37 CFR 1.47(a)
Filed: March 24, 2009	:	
Attorney Docket No. 206-160	:	

This decision is in response to the petition under 37 CFR 1.47(a), filed July 7, 2009.

The petition is dismissed.

Rule 47 applicants are given TWO MONTHS from the mailing date of this decision to reply, correcting the below-noted deficiencies. Any reply should be entitled "Request for Reconsideration of Petition Under 37 CFR 1.47(a)," and should only address the deficiencies noted below, except that the reply may include an oath or declaration executed by the non-signing inventor. **FAILURE TO RESPOND WILL RESULT IN ABANDONMENT OF THE APPLICATION.** Any extensions of time will be governed by 37 CFR 1.136(a).

A grantable petition under 37 CFR 1.47(a) requires: (1) proof that the non-signing inventor cannot be reached or refuses to sign the oath or declaration after having been presented with the application papers (specification, claims and drawings); (2) an acceptable oath or declaration in compliance with 35 U.S.C. §§ 115 and 116; (3) the petition fee; and (4) a statement of the last known address of the non-signing inventor. Applicants lack item (1) set forth above.

As to item (1), the applicable statute (35 U.S.C.§ 116) requires that a "diligent effort" have been expended in attempting to find or reach the non-signing inventor. *See* MPEP 409.03(a). The showing currently fails to demonstrate, with a documented showing, that a diligent effort was made to find or locate non-signing inventor Marco Sander, such that the declaration can be accepted under 37 CFR 1.47(a). Where inability to find or locate a named inventor(s) is alleged, a statement of facts should be submitted that fully describes the exact facts which are relied on to establish that a *diligent effort* was made to locate the inventor. The petition alleges that mailings were sent to two different addresses for him. The first two mailings were returned to sender as undeliverable. The third mailing was mailed to his previous last known address on July 2, 2009. Petitioners state that no response to the third mailing was received. However, it is noted that the instant petition was filed 5 days after the third mailing.

Petitioners have not demonstrated that all efforts were expended in trying to locate non-signing inventor Sander.. In this regard, petitioners should, at the very least, conduct a search of the regional or national registry(s). The results of such search should be made in any future petition for reconsideration. *See* MPEP 409.03(d). Other attempts to reach Inventor Sander should be attempted. If other attempts to locate the inventor, e.g. through co-workers , computer database searches, e-mail, or the telephone continue to fail, then petitioners will establish that the inventor cannot be reached after diligent effort. **The statements of facts must be signed, where at all possible, by a person having firsthand knowledge of the facts recited therein and should be accompanied by documentary evidence in support of the statement of facts.** Print outs of unsuccessful Internet searches should be submitted. It is important that the forthcoming communication contain statements of fact as opposed to conclusions.

Where there is an express or oral refusal, that fact, along with the time and place of the refusal, must be stated in an affidavit or declaration by the party to whom the refusal was made. Whenever an omitted inventor gives a reason for refusing to sign the application oath or declaration, that reason should be stated in the affidavit or declaration. Where there is a written refusal, a copy of the document(s) evidencing that refusal must be made part of the affidavit or declaration.

When it is concluded by the rule 47 applicants that an omitted inventor's conduct constitutes a refusal, all facts upon which that conclusion is based should be stated in an affidavit or declaration. If there is documentary evidence to support facts alleged in the affidavit or declaration, such evidence must be submitted.

Regarding fees, petitioners paid a $130.00 petition fee. The current Rule 47 petition fee is $200.00. Pursuant to petitioners' authorization, deposit account no. 15-0773 will be charged the $70.00 balance due.

Further correspondence with respect to this matter should be addressed as follows:

By mail: Mail Stop PETITIONS
Commissioner for Patents
Post Office Box 1450
Alexandria, VA 22313-1450

By hand: Customer Service Window
Mail Stop Petitions
Randolph Building
401 Dulany Street
Alexandria, VA 22314

By fax: (571) 273-8300
ATTN: Office of Petitions

Telephone inquiries should be directed to the undersigned at (571) 272-3230.

Shirene Willis Brantley

Shirene Willis Brantley
Senior Petitions Attorney
Office of Petitions

UNITED STATES PATENT AND TRADEMARK OFFICE

Commissioner for Patents
United States Patent and Trademark Office
P.O. Box 1450
Alexandria, VA 22313-1450
www.uspto.gov

WALTER OTTESEN
PO BOX 4026
GAITHERSBURG MD 20885-4026

COPY MAILED

DEC 1 8 2009

OFFICE OF PETITIONS

In re Application of	:	
Walter, et al.	:	DECISION NOTING JOINDER OF
Application No. 12/382,765	:	PREVIOUSLY NON-SIGNING
Filed: March 24, 2009	:	INVENTOR & DISMISSING PETITION
Attorney Docket No. 206-160	:	UNDER 37 CFR 1.47(a) AS MOOT

Papers filed on November 13, 2009 in reply to "Decision Refusing Status Under 37 CFR 1.47(a)" mailed on August 13, 2009, included a Declaration signed by the previously non-signing inventor, Marco Sander, in compliance with 37 CFR 1.63.

In view of the joinder of the inventor, further consideration under 37 CFR 1.47(a) is moot; this application does not have any rule 1.47(a) status and no such status should appear on the file wrapper. This application need not be returned to this office for any further consideration under 37 CFR 1.47(a).

After the mailing of this decision, the application will be returned to the Office of Patent Application Processing for further pre-examination processing.

Telephone inquiries should be directed to the undersigned at (571) 272-3230.

Shirene Willis Brantley

Shirene Willis Brantley
Senior Petitions Attorney
Office of Petitions

UNITED STATES PATENT AND TRADEMARK OFFICE

Commissioner for Patents
United States Patent and Trademark Office
P.O. Box 1450
Alexandria, VA 22313-1450
www.uspto.gov

STAAS & HALSEY LLP
SUITE 700
1201 NEW YORK AVENUE, N.W.
WASHINGTON DC 20005

MAIL

MAR 03 2010

DIRECTOR'S OFFICE
TECHNOLOGY CENTER 2600

In re Application of HASHIMOTO, YASUNOBU, et al. Application No. 12/382,821 Filed: March 24, 2009 Attorney Docket No. **1876.1001C3C**	: : : : : : :	DECISION ON REQUEST TO PARTICIPATE IN PATENT PROSECUTION HIGHWAY PROGRAM AND PETITION TO MAKE SPECIAL UNDER 37 CFR 1.102(d)

This is a decision on the request to participate in the Patent Prosecution Highway (PPH) program and the petition under 37 CFR 1.102(d), filed January 19, 2010 to make the above-identified application special.

The request and petition are **GRANTED**.

A grantable request to participate in the PPH program and petition to make special require:

(1) The U.S. application must validly claim priority under 35 U.S.C. 119(a) to one or more applications filed in the JPO;
(2) Applicant must submit a copy of the allowable/patentable claim(s) from the JPO application(s) along with an English translation thereof and a statement that the English translation is accurate;
(3) All the claims in the U.S. application must sufficiently correspond or be amended to sufficiently correspond to the allowable/patentable claim(s) in the JPO application(s);
(4) Examination of the U.S. application has not begun;
(5) Applicant must submit a copy of all the office actions from each of the JPO application(s) containing the allowable/patentable claim(s) along with an English translation thereof and a statement that the English translation is accurate;
(6) Applicant must submit an IDS listing the documents cited by the JPO examiner in the JPO office action along with copies of documents except U.S. patents or U.S. patent application publications; and
(7) The required petition fee under 37 CFR 1.17(h).

The request to participate in the PPH program and petition comply with the above requirements. Accordingly, the above-identified application has been accorded "special" status.

Telephone inquiries concerning this decision should be directed to Kenneth Wieder at 571-272-2986.

All other inquiries concerning the examination or status of the application should be directed to Patent Application Information Retrieval (PAIR) system.

The application is being forwarded to the examiner for action on the merits commensurate with this decision.

Kenneth Wieder
Quality Assurance Specialist
Technology Center 2600
Communications

UNITED STATES PATENT AND TRADEMARK OFFICE

Commissioner for Patents
United States Patent and Trademark Office
P.O. Box 1450
Alexandria, VA 22313-1450
www.uspto.gov

COPY MAILED

JUN 0 5 2009

OFFICE OF PETITIONS

LITMAN LAW OFFICES, LTD.
POST OFFICE BOX 15035
CRYSTAL CITY STATION
ARLINGTON VA 22215-0035

In re Application of	:	
George Wajda	:	
Application No. 12/382,917	:	DECISION ON PETITION
Filed: March 26, 2009	:	TO MAKE SPECIAL UNDER
Attorney Docket No. 30196.09	:	37 CFR 1.102(c)(1)
	:	

This is a decision on the petition under 37 CFR 1.102(c)(1), filed March 26, 2009, to make the above-identified application special based on applicant's age as set forth in M.P.E.P. § 708.02, Section IV.

The petition is **GRANTED**.

A grantable petition to make an application special under 37 CFR 1.102(c)(1) and MPEP § 708.02, Section IV: Applicant's Age must be accompanied by evidence showing that at least one of the applicants is 65 years of age, or more, such as a birth certificate or a statement by applicant. No fee is required

The instant petition includes a statement from the applicant that he is 65 years of age, or older as required under M.P.E.P. § 708.02. Accordingly, the above-identified application has been accorded "special" status.

Telephone inquiries concerning this decision should be directed to Ron Abelson at 571-272-3165.

All other inquiries concerning either the examination or status of the application should be directed to the Technology Center.

The application is being forwarded to the Technology Center Art Unit 3751 for action on the merits commensurate with this decision.

David Bucci
Petitions Examiner
Office of Petitions

UNITED STATES PATENT AND TRADEMARK OFFICE

Commissioner for Patents
United States Patent and Trademark Office
P.O. Box 1450
Alexandria, VA 22313-1450
www.uspto.gov

LITMAN LAW OFFICES, LTD.
POST OFFICE BOX 15035
CRYSTAL CITY STATION
ARLINGTON, VA 22215-0035

COPY MAILED

APR 30 2009

OFFICE OF PETITIONS

In re Application of	:	
George J. Wajda	:	
Application No. 12/382,996	:	DECISION ON PETITION
Filed: March 27, 2009	:	TO MAKE SPECIAL UNDER
Attorney Docket No. 30196.08	:	37 CFR 1.102(c)(1)
	:	

This is a decision on the petition under 37 CFR 1.102(c)(1), filed March 27, 2009, to make the above-identified application special based on applicant's age as set forth in M.P.E.P. § 708.02, Section IV.

The petition is **GRANTED**.

A grantable petition to make an application special under 37 CFR 1.102(c)(1) and MPEP § 708.02, Section IV: Applicant's Age must be accompanied by evidence showing that at least one of the applicants is 65 years of age, or more, such as a birth certificate or a statement by applicant. No fee is required

The instant petition includes a declaration statement signed by applicant. Accordingly, the above-identified application has been accorded "special" status.

Telephone inquiries concerning this decision should be directed to undersigned at 571-272-1642. All other inquiries concerning either the examination or status of the application should be directed to the Technology Center.

The application is being referred to the Office of Patent Application Papers for pre-examination processing. This application will be accorded "special" status once pre-examination processing is complete.

/AMW/
April M. Wise
Petitions Examiner
Office of Petitions

UNITED STATES PATENT AND TRADEMARK OFFICE

Commissioner for Patents
United States Patent and Trademark Office
P.O. Box 1450
Alexandria, VA 22313-1450
www.uspto.gov

BRANNEN LAW OFFICE LLC
NICHOLAS A BRANNEN
104 S. MAIN STREET
SUITE #506
FOND DU LAC WI 54935

COPY MAILED
MAR 03 2010

In re Application of	:	
Giuyliano Quaini et al	:	
Application No. 12/383,057	:	DECISION ON PETITION
Filed: March 19, 2009	:	
Attorney Docket No. 229-P-03	:	

This is a decision on the petition under the unintentional provisions of 37 CFR 1.137(b), filed December 14, 2009, to revive the above-identified application.

The petition is **GRANTED**.

The petition satisfies the conditions for revival pursuant to the provisions of 37 CFR 1.137(b) in that (1) the reply in the form of replacement drawings; (2) the petition fee; and (3) the required statement of unintentional delay have been received. Accordingly, the reply to the Notice to File Corrected Application Papers mailed April 6, 2009, is accepted as having been unintentionally delayed.

Telephone inquiries concerning this decision should be directed to the undersigned at (571) 272-3208.

This application is being referred to the Office of Patent Application Processing for pre-examination processing.

/KOC/
Karen Creasy
Petitions Examiner
Office of Petitions

UNITED STATES PATENT AND TRADEMARK OFFICE

UNITED STATES DEPARTMENT OF COMMERCE
United States Patent and Trademark Office
Address: COMMISSIONER FOR PATENTS
P.O. Box 1450
Alexandria, Virginia 22313-1450
www.uspto.gov

BASF Performance Products LLC
Patent Department
540 White Plains Road
P.O. Box 2005
Tarrytown, NY 10591

Mail Date: 04/20/2010

Applicant	: Joseph A. Lupia	: DECISION ON REQUEST FOR
Patent Number	: 7589035	: RECALCULATION of PATENT
Issue Date	: 09/15/2009	: TERM ADJUSTMENT IN VIEW
Appliction No	: 12/383,160	: OF WYETH AND NOTICE OF INTENT TO
Filed	: 03/19/2009	: ISSUE CERTIFICATE OF CORRECTION
		:

The Request for Recalculation is **GRANTED** to the extent indicated.

The patent term adjustment has been determined to be **0** days. The USPTO will *sua sponte* issue a certificate of correction reflecting the amount of PTA days determined by the recalculation.

Prior to the issuance of the certificate of correction, the USPTO will afford patentee an opportunity to be heard and request reconsideration. Accordingly, patentee has **one month or thirty (30) days**, whichever is longer, to file a request for reconsideration of this patent term adjustment calculation. See 35 U.S.C. 154(b)(3)(B)(ii) and 37 CFR 1.322(a)(4). No extensions of time will be granted under 37 CFR 1.136.

Patentee should use document code PET.OP if electronically filing a request for reconsideration of this patent term adjustment calculation. The patentee must also include the information required by 37 CFR 1.705(b)(2) and the fee required by 37 CFR 1.18(e). If patentee does not file a timely request for reconsideration of this patent term adjustment calculation including the information required by 37 CFR 1.705(b)(2) and the fee required by 37 CFR 1.18(e), the USPTO will issue a certificate of correction reflecting the PTA determination noted above.

Patentee should be aware that in order to preserve the right to review in the United States District Court for the District of Columbia of the USPTO patent term adjustment determination, patentee must ensure that he or she also take the steps required under 35 U.S.C. 154(b)(4)(A) in a timely manner. Nothing in the request for recalculation should be construed as providing an alternative time frame for commencing a civil action under 35 U.S.C. 154(b)(4)(A).

Any questions concerning this decision should be directed to the Office of Patent Legal Administration at 571-272-7702.

UNITED STATES PATENT AND TRADEMARK OFFICE

Commissioner for Patents
United States Patent and Trademark Office
P.O. Box 1450
Alexandria, VA 22313-1450
www.uspto.gov

MILBANK, TWEED, HADLEY & MCCLOY
1 CHASE MANHATTAN PLAZA
NEW YORK NY 10005-1413

MAILED

APR 07 2010

OFFICE OF PETITIONS

In re Application of :
Molloy, Veit, Culhane, and Bell :
Application No. 12/383,210 : DECISION REFUSING STATUS
Filed: March 20, 2009 : UNDER 37 CFR 1.47(a)
Attorney Docket No. 0916328001 :
For: **SYSTEM AND METHOD FOR PROVISING MARKET INSIGHT REGARDING SECURITIES TRADING**

This is a decision on the petition under 37 CFR 1.47(a) filed December 31, 2009.

The petition under 37 CFR 1.47(a) is **dismissed.**

Any request for reconsideration under this decision must be submitted within TWO (2) MONTHS from the mail date of this decision. Extensions of time under 37 CFR 1.136(a) are permitted. Failure to respond will result in the abandonment of this application. Any response should be titled "Request for Reconsideration of Petition Under 37 CFR 1.47(a).

The above-identified application was filed on March 20, 2009, without a properly executed oath or declaration. Accordingly, a "Notice to File Missing Parts Nonprovisional Application" (the "Notice") was mailed on June 1, 2009, requiring a properly executed oath or declaration and a surcharge for the late filing of the oath or declaration. The instant petition was filed on December 31, 2009, with a request for an extension of time within the fifth month.

A grantable petition under 37 CFR 1.47(a) requires:

(1) proof that the non-signing inventor(s) cannot be reached or refuses to sign the oath or declaration after having been presented with the application papers (specification, claims, and drawings);

(2) an acceptable oath or declaration in compliance with 35 U.S.C. §§ 115 and 116;

(3) the petition fee,

(4) a statement of the last known address of the non-signing inventor,

The instant petition lacks item (2) as set forth above.

As to item (2), Section 409.03 of the *Manual of Patent Examining Procedure* (MPEP) provides, in pertinent part, that:

> (A) All the available joint inventors must (1) make oath or declaration on their own behalf as required by 37 CFR 1.63 or 1.175 (see MPEP § 602 § 605.01, and § 1414) and (2) make oath or declaration on behalf of the nonsigning inventor as required by 37 CFR 1.64. An oath or declaration signed by all of the available joint inventors with the signature block of the nonsigning inventor(s) left blank may be treated as having been signed by all the available joint inventors on behalf of the nonsigning inventor(s), unless otherwise indicated.

It is also noted that 37 CFR 1.63 (a)(3) requires the citizenship of each named inventor be set forth on the application. Further, 37 CFR 1.63(c)(1) provides that the declaration must set fort the "...mailing address, and the residence if an inventor lives at a location which is different from where the inventor customarily receives mail." The declaration filed December 31, 2009, neither sets forth the citizenship or mailing address for inventor Bell. The renewed petition must be accompanied by a declaration under 37 CFR 1.63 that corrects these deficiencies.

Further correspondence with respect to this matter should be addressed as follows:

By mail: Mail Stop Petitions
Commissioner for Patents,
PO Box 1450
Alexandria, VA 22313-1450

By FAX: (571) 273-8300
Attn: Office of Petitions

Telephone inquiries concerning this decision should be directed to the undersigned (571) 272-3222.

Kenya A. McLaughlin
Petitions Attorney
Office of Petitions

UNITED STATES PATENT AND TRADEMARK OFFICE

Commissioner for Patents
United States Patent and Trademark Office
P.O. Box 1450
Alexandria, VA 22313-1450
www.uspto.gov

MILBANK, TWEED, HADLEY & MCCLOY
1 CHASE MANHATTAN PLAZA
NEW YORK NY 10005-1413

MAILED

JUL 16 2010

OFFICE OF PETITIONS

In re Application of :
Molloy, Veit, Culhane, and Bell :
Application No. 12/383,210 : DECISION ACCORDING STATUS
Filed: March 20, 2009 : UNDER 37 CFR 1.47(a)
Attorney Docket No. 0916328001 :
For: **SYSTEM AND METHOD FOR PROVISING MARKET INSIGHT REGARDING SECURITIES TRADING**

This is in response to the renewed petition under 37 CFR 1.47(a), filed June 16, 2010.

The petition is **GRANTED**.

The above-identified application and papers have been reviewed and found in compliance with 37 CFR 1.47(a). This application is hereby accorded Rule 1.47(a) status.

The above-identified application was filed on March 20, 2009, without a properly executed oath or declaration. Accordingly, a "Notice to File Missing Parts Nonprovisional Application" (the "Notice") was mailed on June 1, 2009, requiring a properly executed oath or declaration and a surcharge for the late filing of the oath or declaration. The instant renewed was filed on June 16, 2010, with a request for an extension of time within the first month.

Petitioner has shown that inventor Bell cannot be located to join the prosecution of the application. The above-identified application and papers have been reviewed and found in compliance with 37 CFR 1.47(a). This application is hereby accorded Rule 1.47(a) status.

As provided in Rule 1.47(c), this Office will forward notice of this application's filing to the non-signing inventor at the address given in the petition. Notice of the filing of this application will also be published in the Official Gazette.

This application will be forwarded to the Office of Patent Application Processing for further processing.

Telephone inquiries concerning this decision should be directed to the undersigned at (571) 272-3222.

/Kenya A. McLaughlin/

Kenya A. McLaughlin
Petitions Attorney
Office of Petitions

UNITED STATES PATENT AND TRADEMARK OFFICE

Commissioner for Patents
United States Patent and Trademark Office
P.O. Box 1450
Alexandria, VA 22313-1450
www.uspto.gov

COPY MAILED

APR 30 2009

OFFICE OF PETITIONS

WILLIAM T. MORRISON, JR
4917 TOP ROYAL LANE
JACKSONVILLE, FL 32277

In re Application of	:	
William T. Morrison, Jr.	:	
Application No. 12/383,216	:	DECISION ON PETITION
Filed: March 20, 2009	:	TO MAKE SPECIAL UNDER
Attorney Docket No.	:	37 CFR 1.102(c)(1)
	:	

This is a decision on the petition under 37 CFR 1.102(c)(1), filed March 20, 2009, to make the above-identified application special based on applicant's age as set forth in M.P.E.P. § 708.02, Section IV.

The petition is **GRANTED**.

A grantable petition to make an application special under 37 CFR 1.102(c)(1) and MPEP § 708.02, Section IV: Applicant's Age must be accompanied by evidence showing that at least one of the applicants is 65 years of age, or more, such as a birth certificate or a statement by applicant. No fee is required

The instant petition includes a copy of applicant's driver's license. Accordingly, the above-identified application has been accorded "special" status.

Telephone inquiries concerning this decision should be directed to undersigned at 571-272-1642. All other inquiries concerning either the examination or status of the application should be directed to the Technology Center.

The application is being referred back to the Office of Patent Application Papers to await a reply to the Notice to File Corrected Application Papers mailed April 20, 2009. This application will be accorded "special" status once pre-examination processing is complete.

/AMW/
April M. Wise
Petitions Examiner
Office of Petitions

UNITED STATES PATENT AND TRADEMARK OFFICE

Commissioner for Patents
United States Patent and Trademark Office
P.O. Box 1450
Alexandria, VA 22313-1450
www.uspto.gov

BAMBI FAIVRE WALTERS
PO BOX 5743
WILLIAMBURG, VA 23188

COPY MAILED

APR 30 2009

OFFICE OF PETITIONS

In re Application of	:	
James Badia	:	
Application No. 12/383,236	:	DECISION ON PETITION
Filed: March 20, 2009	:	TO MAKE SPECIAL UNDER
Attorney Docket No. 2009-JBPAT	:	37 CFR 1.102(c)(1)
	:	

This is a decision on the petition under 37 CFR 1.102(c)(1), filed March 20, 2009, to make the above-identified application special based on applicant's age as set forth in M.P.E.P. § 708.02, Section IV.

The petition is **GRANTED**.

A grantable petition to make an application special under 37 CFR 1.102(c)(1) and MPEP § 708.02, Section IV: Applicant's Age must be accompanied by evidence showing that at least one of the applicants is 65 years of age, or more, such as a birth certificate or a statement by applicant. No fee is required

The instant petition includes a statement from applicant's attorney that she is in possession of proof of applicant's age. Accordingly, the above-identified application has been accorded "special" status.

Telephone inquiries concerning this decision should be directed to undersigned at 571-272-1642. All other inquiries concerning either the examination or status of the application should be directed to the Technology Center.

The application is being referred back to the Office of Patent Application Processing for further pre-examination processing. This application will be accorded "special" processing once pre-examination processing is complete.

/AMW/
April M. Wise
Petitions Examiner
Office of Petitions

UNITED STATES PATENT AND TRADEMARK OFFICE

Commissioner for Patents
United States Patent and Trademark Office
P.O. Box 1450
Alexandria, VA 22313-1450
www.uspto.gov

FISH & ASSOCIATES, PC
ROBERT D. FISH
2603 MAIN STREET
SUITE 1000
IRVINE CA 92614-6232

MAILED

APR 27 2009

OFFICE OF PETITIONS

In re Application of	:	
WAIDE, William M. et al.	:	
Application No. 12/383,310	:	DECISION ON PETITION
Filed: March 23, 2009	:	TO MAKE SPECIAL UNDER
Attorney Docket No. **101355.0015US1**	:	37 CFR 1.102(c)(1)
	:	

This is a decision on the petition under 37 CFR 1.102(c)(1), filed March 23, 2009, to make the above-identified application special based on applicant's age as set forth in M.P.E.P. § 708.02, Section IV.

The petition is **GRANTED**.

A grantable petition to make an application special under 37 CFR 1.102(c)(1) and MPEP § 708.02, Section IV: Applicant's Age must be accompanied by evidence showing that at least one of the applicants is 65 years of age, or more, such as a birth certificate or a statement by applicant. No fee is required

The instant petition includes a statement by Abe Karem attesting that he is over 65 years of age. Accordingly, the above-identified application has been accorded "special" status.

Telephone inquiries concerning this decision should be directed to Michelle R. Eason at 571-272-4231.

All other inquiries concerning either the examination or status of the application should be directed to the Technology Center.

This application is being referred to the Office of Patent Application Processing to await a reply to the Notice to File Missing Parts (Notice) mailed April 24, 2009. This application will be accorded "special" status when pre-examination processing is done.

Michelle R. Eason
Paralegal Specialist
Office of Petitions

UNITED STATES PATENT AND TRADEMARK OFFICE

Commissioner for Patents
United States Patent and Trademark Office
P.O. Box 1450
Alexandria, VA 22313-1450
www.uspto.gov

R. WHITNEY JOHNSON
201 SOUTH MAIN STREET,
SUITE 1100
SALT LAKE CITY UT 84111

MAILED

JUL 09 2010

OFFICE OF PETITIONS

In re Application of	:	
Gloria Jean SCHULTZ	:	
Application No. 12/383,332	:	DECISION ON PETITION
Filed: March 23, 2009	:	TO WITHDRAW
Attorney Docket No. 35924/1	:	FROM RECORD
	:	

This is a decision on the Request to Withdraw as attorney or agent of record under 37 C.F.R. § 1.36(b), filed May 18, 2010.

The request is **APPROVED**.

A grantable request to withdraw as attorney/agent of record must be signed by every attorney/agent seeking to withdraw or contain a clear indication that one attorney is signing on behalf of another/others. The Office requires the practitioner(s) requesting withdrawal to certify that he, she, or they have: (1) given reasonable notice to the client, prior to the expiration of the response period, that the practitioner(s) intends to withdraw from employment; (2) delivered to the client or a duly authorized representative of the client all papers and property (including funds) to which the client is entitled; and (3) notified the client of any responses that may be due and the time frame within which the client must respond, pursuant 37 CFR 10.40(c).

The request was signed by R. Whitney Johnson on behalf of the attorneys of record associated with Customer No. 32642.

The attorneys associated with Customer No. 32642 have been withdrawn.

Applicant is reminded that there is no attorney of record at this time.

The correspondence address of record will continue to be the address indicated below until otherwise properly notified.

Telephone inquiries concerning this decision should be directed to the undersigned at 571-272-6735.

/dcg/
Diane Goodwyn
Petitions Examiner
Office of Petitions

cc: GLORIA SCHULTZ
4092 S. 670 E. UNIT H
SALT LAKE CITY UT 84107

UNITED STATES PATENT AND TRADEMARK OFFICE

Commissioner for Patents
United States Patent and Trademark Office
P.O. Box 1450
Alexandria, VA 22313-1450
www.uspto.gov

MAILED OCT 01 2009

Kenneth P. Glynn
24 Mine Street
Flemington NJ 08822

In re Application of: Kenneth P. Glynn
Application No.: 12/383353
Filed: March 23, 2009
Title: RECIPROCATING SOLAR ENGINE WITH SOLAR REFLECTORS

DECISION ON PETITION TO MAKE SPECIAL FOR NEW APPLICATION UNDER 37 C.F.R. § 1.102 & M.P.E.P. § 708.02

This is a decision on the petition filed on August 18, 2009 to make the above-identified application special for accelerated examination procedure under 37 C.F.R. § 1.102(d).

The petition to make the application special is **DENIED**.

REGULATION AND PRACTICE

To be eligible for accelerated examination under 37 C.F.R. § 1.102(d) and pursuant to the "Change to Practice for Petitions in Patent Applications to Make Special and for Accelerated Examination" published in the Federal Register on June 26, 2006 (71 Fed. Reg. 36323), the following conditions must be satisfied:

1. The application must be a non-reissue utility or design application filed under 37 CFR 1.111(a);
2. The application, the petition and the required fees must be filed electronically using the USPTO's electronic filing system (EFS), or EFS-web; if not filed electronically, a statement asserting that EFS and EFS-web were not available during the normal business hours;
3. The application, at the time of filing, must be complete under 37 CFR 1.51 and in condition for examination;
4. The application must contain three or fewer independent claims and twenty or fewer total claims and the claims must be directed to a single invention.
5. The petition must be filed with the application.

The application as filed is not eligible for the accelerated examination under 37 C.F.R. § 1.102(d) because the petition was not filed with the application. As noted in the policy statement referenced above, any petition to make special filed on or after the effective date must meet the new requirements set forth in the 71 Fed. Reg. 36323 notice. Applications filed before the effective date will not be eligible for the revised accelerated examination program. The

effective date of the change in practice was August 25, 2006. Thus the instant petition must be reviewed under the revised practice and the instant application is ineligible.

The petition appears on its face to have been filed without recognition of the August 25, 2006 policy change to the petition to make special program. The changes to the program are substantial. The Notice of Federal Register on June 26, 2006 (71 Fed. Reg. 36323) can be accessed on the internet at
http://www.uspto.gov/web/offices/com/sol/notices/71fr36323.pdf

Further guidance may be found website of the USPTO at
http://www.uspto.gov/web/patents/accelerated

under the accelerated examination link.

For the above-stated reasons, the petition is **DENIED**. The application will therefore be taken up by the examiner for action in its regular turn.

Any inquiry regarding this decision should be directed to Linda Sholl, TC 3700 Special Program Examiner, at (571) 272-4391.

Linda Sholl

Linda Sholl
Special Program Examiner
Technology Center 3700

UNITED STATES PATENT AND TRADEMARK OFFICE

Commissioner for Patents
United States Patent and Trademark Office
P.O. Box 1450
Alexandria, VA 22313-1450
www.uspto.gov

ALFRED D. LOBO
LOBO & CO., L.P.A.
SUITE #2
2655 EUCLID HITS. BLVD.
CLEVELAND HTS., OH 44106-2851

COPY MAILED

APR 30 2009

OFFICE OF PETITIONS

In re Application of	:	
Robert Lee Bullock	:	
Application No. 12/383,416	:	DECISION ON PETITION
Filed: March 34, 2009	:	TO MAKE SPECIAL UNDER
Attorney Docket No. BUL-071-A	:	37 CFR 1.102(c)(1)
	:	

This is a decision on the petition under 37 CFR 1.102(c)(1), filed March 24, 2009, to make the above-identified application special based on applicant's age as set forth in M.P.E.P. § 708.02, Section IV.

The petition is **DISMISSED**.

A grantable petition to make an application special under 37 CFR 1.102(c)(1) and MPEP § 708.02, Section IV: Applicant's Age, must be accompanied by evidence showing that at least one of the applicants is 65 years of age, or more, such as a birth certificate or a statement by applicant. No fee is required.

The instant petition does not include a declaration statement signed by applicant or a statement from applicant's representative that he is in possession of proof of applicant's age.

Further correspondence with respect to this matter should be addressed as follows:

By Mail: Mail Stop PETITION
Commissioner for Patents
P. O. Box 1450
Alexandria, VA 22313-1450

By hand: U. S. Patent and Trademark Office
Customer Service Window, Mail Stop Petitions
Randolph Building
401 Dulany Street
Alexandria, VA 22314

By FAX: (571) 273-8300

Telephone inquiries concerning this decision should be directed to undersigned at 571-272-1642. All other inquiries concerning either the examination or status of the application should be directed to the Technology Center.

The application is being referred back to the Office of Patent Application Papers to await a reply to the Notice to File Corrected Application Papers (Notice) mailed April 14, 2009.

/AMW/
April M. Wise
Petitions Examiner
Office of Petitions

UNITED STATES PATENT AND TRADEMARK OFFICE

Commissioner for Patents
United States Patent and Trademark Office
P.O. Box 1450
Alexandria, VA 22313-1450
www.uspto.gov

ALFRED D. LOBO
LOBO & CO., LPA
SUITE #2
2655 EUCLID HITS, BLVD.
CLEVELAND HTS.. OH 44106-2851

MAILED

MAY 28 2009

OFFICE OF PETITIONS

In re Application of	:	
Robert Lee Bullock	:	
Application No. 12/383,416	:	DECISION ON PETITION
Filed: March 24, 2009	:	TO MAKE SPECIAL UNDER
Attorney Docket No. BUL-071-A	:	37 CFR 1.102(c)(1)
	:	

This is a decision on the petition under 37 CFR 1.102(c)(1), filed March 24, 2009, to make the above-identified application special based on applicant's age as set forth in M.P.E.P. § 708.02, Section IV.

The petition is **GRANTED**.

A grantable petition to make an application special under 37 CFR 1.102(c)(1) and MPEP § 708.02, Section IV: Applicant's Age must be accompanied by evidence showing that at least one of the applicants is 65 years of age, or more, such as a birth certificate or a statement by applicant. No fee is required

The instant petition includes a statement from applicants attorney stating applicant's age. Accordingly, the above-identified application has been accorded "special" status.

Telephone inquiries concerning this decision should be directed to undersigned at 571-272-1642.

All other inquiries concerning either the examination or status of the application should be directed to the Technology Center.

The application is being forwarded to the Technology Center Art Unit 3612 for action on the merits commensurate with this decision.

/AMW/
April M. Wise
Petitions Examiner
Office of Petitions

UNITED STATES PATENT AND TRADEMARK OFFICE

Commissioner for Patents
United States Patent and Trademark Office
P.O. Box 1450
Alexandria, VA 22313-1450
www.uspto.gov

KENNETH WATOV, ESQ.
WATOV & KIPNES, P.C.
P.O. BOX 247
PRINCETON JUNCTION NJ 08550

COPY MAILED

NOV 17 2009

OFFICE OF PETITIONS

In re Application of	:	
Robert B. Royds	:	
Application No. 12/383,445	:	ON PETITION
Filed: March 24, 2009	:	
Attorney Docket No. 1301.1.029	:	

This is a decision on the petition under 37 CFR 1.102(c)(1), filed October 22, 2009, to make the above-identified application special based on applicant's age as set forth in M.P.E.P. § 708.02, Section IV.

The petition is **GRANTED**.

A grantable petition to make an application special under 37 CFR 1.102(c)(1) and MPEP § 708.02, Section IV: Applicant's Age must be accompanied by evidence showing that at least one of the applicants is 65 years of age, or more, such as a birth certificate or a statement by applicant. No fee is required.

The instant petition includes a statement (PTO/SB/130 form) by the applicant's attorney that he is 65 years of age. Accordingly, the above-identified application has been accorded "special" status.

Telephone inquiries concerning this decision should be directed to the undersigned at 571-272-7751. All other inquiries concerning either the examination or status of the application should be directed to the Technology Center.

This matter is being referred to the Technology Center Art Unit 3686 for action on the merits commensurate with this decision.

Joan Olszewski
Petitions Examiner
Office of Petitions

UNITED STATES PATENT AND TRADEMARK OFFICE

Commissioner for Patents
United States Patent and Trademark Office
P.O. Box 1450
Alexandria, VA 22313-1450
www.uspto.gov

COPY MAILED

AUG 14 2009

OFFICE OF PETITIONS

MASUVALLEY & PARTNERS
8765 AERO DRIVE
SUITE 312
SAN DIEGO CA 92123

In re Application of	:	
Junichi Koike, et al.	:	
Application No. 12/383,524	:	DECISION ON PETITION
Filed: March 24, 2009	:	TO MAKE SPECIAL UNDER
Attorney Docket No. 13024-310US	:	37 CFR 1.102(c)(1)
	:	

This is a decision on the petition under 37 CFR 1.102(c)(1), filed June 16, 2009, to make the above-identified application special based on applicant's age as set forth in M.P.E.P. § 708.02, Section IV.

The petition is **GRANTED**.

A grantable petition to make an application special under 37 CFR 1.102(c)(1) and MPEP § 708.02, Section IV: Applicant's Age must be accompanied by evidence showing that at least one of the applicants is 65 years of age, or more, such as a birth certificate or a statement by applicant. No fee is required

The instant petition includes a statement from the attorney of record declaring that he/she is in possession of such evidence that shows the applicant, Akihiro Shibatomi is 65 years of age or older. Accordingly, the above-identified application has been accorded "special" status.

Telephone inquiries concerning this decision should be directed to at 571-272-2991.

All other inquiries concerning either the examination or status of the application should be directed to the Technology Center.

The application is being forwarded to the Technology Center Art Unit 2811 for action on the merits commensurate with this decision.

Terri Williams

Terri Williams
Petitions Examiner
Office of Petitions

UNITED STATES PATENT AND TRADEMARK OFFICE

UNITED STATES DEPARTMENT OF COMMERCE
United States Patent and Trademark Office
Address: COMMISSIONER FOR PATENTS
P.O. Box 1450
Alexandria, Virginia 22313-1450
www.uspto.gov

APPLICATION NO.	FILING DATE	FIRST NAMED INVENTOR	ATTORNEY DOCKET NO.	CONFIRMATION NO.
12/383,532	03/24/2009	Puthur Paulson	Sol-4US	6698

58713 7590 02/05/2010
NOLD INTELLECTUAL PROPERTY LAW
101 California Street
Suite 2450
San Francisco, CA 94111

EXAMINER	
ART UNIT	PAPER NUMBER
1795	

MAIL DATE	DELIVERY MODE
02/05/2010	PAPER

Please find below and/or attached an Office communication concerning this application or proceeding.

The time period for reply, if any, is set in the attached communication.

UNITED STATES PATENT AND TRADEMARK OFFICE

Commissioner for Patents
United States Patent and Trademark Office
P.O. Box 1450
Alexandria, VA 22313-1450
www.uspto.gov

NOLD INTELLECTUAL PROPERTY LAW
101 California Street
Suite 2450
San Francisco CA 94111

FEB 05 2010

In re Application of	:	
Paulson et al.	:	DECISION ON PETITION
Application No. 12/383,532	:	TO MAKE SPECIAL UNDER
Filed: 3/24/2009	:	THE GREEN TECHNOLOGY
Attorney Docket No. **Sol-4US**	:	PILOT PROGRAM

This is a decision on the petition under 37 CFR 1.102, filed 12/10/2009, to make the above-identified application special under the pilot program for applications pertaining to Green Technologies as set forth 74 Federal Register Notice 64666 (December 8, 2009).

The petition is **GRANTED**.

A grantable petition to make an application special under 37 CFR 1.102 and the pilot program as set forth in 74 FR 64666 must be directed to a nonprovisional application filed under 35 USC 111(a) or be a national stage entry under 35 USC 371, exclusive of any reissue applications and be filed prior to the date of the notice, December 8, 2009.

In order to qualify for special status, the following requirements must be met. 1) The application must be classified in one of the eligible US classifications listed in section VI of the notice. 2) The application must have no more than 3 independent claims and no more than 20 total claims. 3) The application must not contain any multiple dependent claims. 4) The petition must state the basis for seeking special status, i.e., the claimed invention either: A) materially enhances the quality of the environment or B) materially contributes to: i) the discovery or development of renewable energy resources, ii) the more efficient utilization and conservation of energy resources, or iii) greenhouse gas emission reduction. 5) If the disclosure is not clear on its face that the claimed invention materially contributes under category (A) or (B), the petition must be accompanied by a statement by the applicant, assignee, or an attorney/agent registered to practice before the Office explaining how the materiality standard is met. 6) A statement that applicant will agree to make an election without traverse in a telephonic interview if a restriction requirement is made by the examiner. 7) The petition to make special must be filed electronically. 8) The petition must be filed at least one day prior to the date that a first Office Action appears in the Patent Application Information Retrieval (PAIR) system. 9) The petition

must be accompanied by a request for early publication in compliance with 37 CFR 1.219 and include the publication fee as set forth in 37 CFR 1.18(d).

The requirement for a fee for consideration of the petition to make special for applications pertaining to Green Technologies has been waived.

The instant petition complies with items 1 – 9 above. Accordingly, the above-identified application has been accorded "special" status.

Telephone inquires concerning this decision should be directed to Tom Dunn at 571-272-1171.

The application is being forwarded to the Technology Center Art Unit 1795 for action on the merits commensurate with this decision.

/Tom Dunn/

Tom Dunn
Quality Assurance Specialist
Technology Center 1700

UNITED STATES PATENT AND TRADEMARK OFFICE

Commissioner for Patents
United States Patent and Trademark Office
P.O. Box 1450
Alexandria, VA 22313-1450
www.uspto.gov

BRUCE H. JOHNSONBAUGH
ECKHOFF & HOPPE
8TH FLOOR
1900 N. CALIFORNIA BLVD.
WALNUT CREEK CA 94596

MAILED

JUL 02 2010

OFFICE OF PETITIONS

In re Application of	:	
Verne L. Schellhorn	:	
Application No. 12/383,555	:	ON PETITION
Filed: March 24, 2009	:	
Attorney Docket No. 9644/Jumbo	:	

This is a decision on the petition under 37 CFR 1.102(c)(1), filed June 1, 2010, to make the above-identified application special based on applicant's age as set forth in M.P.E.P. § 708.02, Section IV.

The petition is **GRANTED**.

A grantable petition to make an application special under 37 CFR 1.102(c)(1) and MPEP § 708.02, Section IV: Applicant's Age must be accompanied by evidence showing that at least one of the applicants is 65 years of age, or more, such as a birth certificate or a statement by applicant. No fee is required.

The instant petition includes a statement by the applicant that applicant is 65 years of age, and is also accompanied with a copy of applicant's California State driver's license.

Accordingly, the above-identified application has been accorded "special" status.

Telephone inquiries concerning this decision should be directed to the undersigned at 571-272-7751. All other inquiries concerning either the examination or status of the application should be directed to the Technology Center.

This matter is being referred to the Technology Center Art Unit 3672 for action on the merits commensurate with this decision.

Joan Olszewski
Petitions Examiner
Office of Petitions

UNITED STATES PATENT AND TRADEMARK OFFICE

16 APR 2009

Commissioner for Patents
United States Patent and Trademark Office
P.O. Box 1450
Alexandria, VA 22313-1450
www.uspto.gov

SHLESINGER, ARKWRIGHT & GARVEY LLP
Suite 600
1420 King Street
Alexandria VA 22314

In re Application of: TANAK, Harki U.S. Application No.: 12/383,604 Receipt Date: March 27, 2009 Attorney Docket No.: None For: DATA COLLECTION FOR ELECTRICAL IMPEDANCE TOMOGRAPHY	DECISION ON PETITION UNDER 37 CFR 1.137(b)

This decision is issued in response to the "Petition To Revive An Unintentionally Abandoned Application Under 37 CFR 1.137(b)" filed March 27, 2009. Applicant has paid the required petition fee.

BACKGROUND

On August 28, 2007, applicant filed international application PCT/IB2007/003726. The application claimed a priority date of August 28, 2006, and it designated the United States. The deadline for submission of the basic national fee was thirty months from the priority date, i.e., February 28, 2009.

A request for entry into the U.S. national stage and payment of the basic national fee was not submitted on or prior to February 28, 2009. Accordingly, international application PCT/IB2007/003726 became abandoned with respect to the United States at midnight on February 28, 2009 (see 35 U.S.C. 371(d); 37 CFR 1.495(h)).

On March 27, 2009, applicant filed the present application under 35 U.S.C. 111(a). The submission included a preliminary amendment amending the first sentence of the description to identify the present application as "a continuation application of International PCT Application No. PCT/IB2007/003726, with an international filing date of August 28, 2007." The submission also included the petition for revival of international application PCT/IB2007/003726 considered herein.

DISCUSSION

The present petition was accompanied by payment of the required petition fee, and the petition includes a statement that "the entire delay from the due date for entering the national stage on February 28, 2009, to the filing of this petition was unintentional," satisfying the requirements of 37 CFR 1.137(b)(3).

In addition, as discussed above, the first sentence of the description (as amended in the preliminary amendment) includes a reference identifying the present application as a continuation of PCT/IB2007/003726, and the filing receipt mailed by the USPTO on April 14, 2009 identified the application as a continuation of PCT/IB2007/003726. The filing of a continuation application under 35 U.S.C. 111(a) is accepted as the "required reply" under 37 CFR 1.137(b) (see MPEP section 711.03(c)(II)(A)).

Based on the above, the requirements of 37 CFR 1.137(b) have been satisfied. Therefore, the request to revive the international application as to the United States is appropriately granted.

CONCLUSION

The petition for revival under 37 CFR 1.137(b) is **GRANTED**.

International application PCT/IB2007/003726 is revived for purposes of continuity only, and since continuity has been established by this decision reviving the international application, the international application is again abandoned in favor of the present continuing application number 12/383,604.

Richard M. Ross
Attorney Advisor
Office of PCT Legal Administration
Telephone: (571) 272-3296
Facsimile: (571) 273-0459

UNITED STATES PATENT AND TRADEMARK OFFICE

UNITED STATES DEPARTMENT OF COMMERCE
United States Patent and Trademark Office
Address: COMMISSIONER FOR PATENTS
P.O. Box 1450
Alexandria, Virginia 22313-1450
www.uspto.gov

APPLICATION NO.	FILING DATE	FIRST NAMED INVENTOR	ATTORNEY DOCKET NO.	CONFIRMATION NO.
12/383,867	03/31/2009	Inkyun Kim		1109

7590 09/23/2009

Inkyun Kim
225 W. Carminireal Ave.
Arcadia, CA 91007

EXAMINER

ART UNIT	PAPER NUMBER
1791	

MAIL DATE	DELIVERY MODE
09/23/2009	PAPER

Please find below and/or attached an Office communication concerning this application or proceeding.

The time period for reply, if any, is set in the attached communication.

UNITED STATES PATENT AND TRADEMARK OFFICE

Commissioner for Patents
United States Patent and Trademark Office
P.O. Box 1450
Alexandria, VA 22313-1450
www.uspto.gov

9/23/09

CST

In re application of Inkyun Kim Serial No. 12/383,867 Filed: March 31, 2009 For: METHOD OF DURABLY GRAFTING A DECORATED FABRIC TO A CLOTHING	:	DECISION ON PETITION TO MAKE SPECIAL

This is a decision on the petition filed on September 3, 2009 to make the above-identified application special based on the ground of prospective manufacture.

The petition to make the application special is **DENIED.**

REGULATION AND PRACTICE

Pursuant to the "Changes to Practice for Petitions in Patent Applications to Make Special and for Accelerated Examination" published in the Federal Register on June 26, 2006 (71 Fed. Reg. 36323), all petitions to make special, except those based on applicant's health or age or the PPH pilot, filed on or after August 25, 2006 are required to comply with the requirements of petitions to make special under the accelerated examination program. Note that any petition to make special under MPEP § 708.02, based solely on subsection I (manufacture) was required to be filed prior to August 25, 2006.

To be eligible for accelerated examination under 37 C.F.R. § 1.102(d) and pursuant to the "Changes to Practice for Petitions in Patent Applications to Make Special and for Accelerated Examination" published in the Federal Register on June 26, 2006 (71 Fed. Reg. 36323), the following conditions must be satisfied:

1. The application must be a non-reissue utility or design application filed under 37 CFR 1.111(a);
2. The application, the petition and the required fees must be filed electronically using the USPTO's electronic filing system (EFS), or EFS-web; if not filed electronically, a statement asserting that EFS and EFS-web were not available during the normal business hours;

3. The application, at the time of filing, must be complete under 37 CFR 1.51 and in condition for examination;
4. The application must contain three or fewer independent claims and twenty or fewer total claims and the claims must be directed to a single invention.

The application as filed is not eligible for accelerated examination under 37 C.F.R. § 1.102(d) because the petition to make special was not filed concurrently with the application as required by MPEP § 708.02(a). Note that the application was filed on March 31, 2009, while the petition to make special was filed on September 3, 2009.

Furthermore, it appears that the application, the petition and the required fees were not filed electronically using the USPTO's electronic filing system (EFS), or EFS-web.

For the above-stated reasons, the petition is denied. The application will therefore be taken up by the examiner for action in its regular turn.

Any inquiry regarding this decision should be directed to Christine Tierney, Quality Assurance Specialist, at (571) 272-1055.

/Christine Tierney/

Christine Tierney
Quality Assurance Specialist
Technology Center 1700

UNITED STATES PATENT AND TRADEMARK OFFICE

Commissioner for Patents
United States Patent and Trademark Office
P.O. Box 1450
Alexandria, VA 22313-1450
www.uspto.gov

MAILED

JAN 22 2010

OFFICE OF PETITIONS

PATENT LAW OFFICE OF DAVID G. BECK
P. O. BOX 1146
MILL VALLEY CA 94942

In re Application of	:	
STRAUBEL ET AL.	:	DECISION ON PETITION
Application No. 12/383,871	:	TO MAKE SPECIAL UNDER
Filed: March 30, 2009	:	THE GREEN TECHNOLOGY
Attorney Docket No. TES009-1	:	PILOT PROGRAM

This is a decision on the petition under 37 CFR 1.102, filed December 14, 2009, to make the above-identified application special under the pilot program for applications pertaining to Green Technologies as set forth in 74 Federal Register Notice 64666 (December 8, 2009).

The petition is **DISMISSED**.

If reconsideration of this decision is desired, a petition for reconsideration must be filed within ONE (1) MONTH OR THIRTY (30) DAYS from the mail date of this decision, whichever is longer. No extension of this time limit can be granted under 37 CFR 1.136(a) or (b). The petition for reconsideration should include an exhaustive attempt to provide the lacking item(s) noted below, since, after a decision on the petition for reconsideration, no further reconsideration or review of the matter will be undertaken by the Director.

A grantable petition to make an application special under 37 CFR 1.102 and the pilot program as set forth in 74 FR 64666 must be directed to a nonprovisional application filed under 35 USC 111(a) or be a national stage entry under 35 USC 371, exclusive of any reissue applications and be filed prior to the date of the notice, December 8, 2009.

In order to qualify for special status, the following requirements must be met. 1) The application must be classified in one of the eligible US classifications listed in section VI of the notice. 2) The application must have no more than 3 independent claims and no more than 20 total claims. 3) The application must not contain any multiple dependent claims. 4) The petition must state the basis for seeking special status, i.e., the claimed invention either: A) materially enhances the quality of the environment or B) materially contributes to: i) the discovery or development of renewable energy resources, ii) the more efficient utilization and conservation of energy resources, or iii) greenhouse gas emission reduction. 5) If the disclosure is not clear on its face that the claimed invention materially contributes under category (A) or (B), the petition must be

accompanied by a statement by the applicant, assignee, or an attorney/agent registered to practice before the Office explaining how the materiality standard is met. 6) A statement that applicant will agree to make an election without traverse in a telephonic interview if a restriction requirement is made by the examiner. 7) The petition to make special must be filed electronically. 8) The petition must be filed at least one day prior to the date that a first Office Action appears in the Patent Application Information Retrieval (PAIR) system. 9) The petition must be accompanied by a request for early publication in compliance with 37 CFR 1.219 and include the publication fee as set forth in 37 CFR 1.18(d).

The requirement for a fee for consideration of the petition to make special for applications pertaining to Green Technologies has been waived.

The petition lacks items 1 and 5 above for the reasons as explained in more detail below.

In regard to item 1, this application has been classified (USPC 429/129) in an area that is not one of the eligible US classifications listed in section VI of the notice. Therefore, this application is not eligible for the Pilot Program. The classification limitations are purposefully made to be narrow for the Pilot Program; however, these may be expanded based upon the success of the Pilot Program. Petitioner may file a preliminary amendment that would cause this application to be classified else where. However, while petitioner may suggest a classification (see, e.g., MPEP 708.02(a)(VII)(C)), the application will be assigned to the most appropriate classification based upon current U.S. classification guidelines. Furthermore, a petition for the Pilot Program should not be filed until and unless all of the requirements set forth in the Notice are met; i.e., a petition should not be filed for an application that is currently classified outside the eligible classifications set forth in the Notice.

In regard to item 5, it is noted that the instant petition includes a statement explaining how the instant application materially contributes to category (B), i.e., the reduction of greenhouse gas emissions. The instant invention is directed to a "Battery Cell With A Partial Dielectric Barrier For Improved Battery Pack Mechanical And Thermal Performance". Petitioner's argument is that the use of the instant battery in electric vehicles would potentially (a) provide weight savings, (b) prevent destruction of the vehicle due to a thermal runaway event, and (c) "help to reduce the number of vehicles utilizing internal combustion engines." Petitioner should note that the prevention of potential destruction of the vehicle due to a thermal runaway event is a safety issue and the potential reduction in energy consumption via combustion systems and weight reduction depends upon how an end user might use the instant invention. As stated in the notice, the materiality standard does not permit an applicant to speculate as to how a hypothetical end-user might specially apply the invention in a manner than could materially contribute to category (A) or (B). *Also see MPEP § 708.02 (VI).* Accordingly, it is unclear as to how the claimed invention would materially contribute to category (A) or (B).

Further correspondence with respect to this matter should be addressed as follows:

By Mail: Mail Stop PETITION
Commissioner for Patents
P. O. Box 1450
Alexandria, VA 22313-1450

By hand: U. S. Patent and Trademark Office
Customer Service Window, Mail Stop Petitions
Randolph Building
401 Dulany Street
Alexandria, VA 22314

By FAX: (571) 273-8300

Telephone inquiries concerning this decision should be directed to Gay Ann Spahn at 571-272-8011.

All other inquiries concerning either the examination or status of the application should be directed to the Technology Center.

The application is being forwarded to the Technology Center Art Unit 1795 for action in its regular turn.

Ramesh Krishnamurthy

Ramesh Krishnamurthy
Petitions Examiner
Office of Petitions

UNITED STATES PATENT AND TRADEMARK OFFICE

Commissioner for Patents
United States Patent and Trademark Office
P.O. Box 1450
Alexandria, VA 22313-1450
www.uspt

COPY MAILED

AUG 04 2009

OFFICE OF PETITIONS

Dan M. De La Rosa, Esq.
Suite 24C
300 E. 77th Street
New York NY 10075

In re Application of	:	
Anthony Viggiani	:	
Application No. 12/383881	:	DECISION ON PETITION
Filed: March 30, 2009	:	TO MAKE SPECIAL UNDER
Attorney Docket No. P-0188US	:	37 CFR 1.102(c)(1)
	:	

This is a decision on the petition under 37 CFR 1.102(c)(1), filed June 15, 2009, to make the above-identified application special based on applicant's age as set forth in M.P.E.P. § 708.02, Section IV.

The petition is **GRANTED**.

A grantable petition to make an application special under 37 CFR 1.102(c)(1) and MPEP § 708.02, Section IV: Applicant's Age must be accompanied by evidence showing that at least one of the applicants is 65 years of age, or more, such as a birth certificate or a statement by applicant. No fee is required

The instant petition includes a statement by applicant. Accordingly, the above-identified application has been accorded "special" status.

Telephone inquiries concerning this decision should be directed to Ron Abelson at 571-272-3165 or the undersigned at 571-272-7099.

All other inquiries concerning either the examination or status of the application should be directed to the Technology Center.

The application is being forwarded to the Technology Center Art Unit 3743 for action on the merits commensurate with this decision.

David Bucci
Petitions Examiner
Office of Petitions

UNITED STATES PATENT AND TRADEMARK OFFICE

Commissioner for Patents
United States Patent and Trademark Office
P.O. Box 1450
Alexandria, VA 22313-1450
www.uspto.gov

DAVID W. CARRITHERS
CARRITHERS LAW OFFICE, PLLC
6200 DUTCHMANS LANE, SUITE 206
LOUISVILLE, KY 40205

COPY MAILED

APR 24 2009

OFFICE OF PETITIONS

In re Application of	:	
Stacey L. GRIGSBY, et al.	:	
Application No. 12/384,042	:	DECISION ON PETITION TO MAKE
Filed: March 31, 2009	:	SPECIAL UNDER 37 CFR 1.102(c)(1)
Attorney Docket No. **AM110**	:	
	:	

This is a decision on the petition under 37 CFR 1.102(c)(1), filed March 31, 2009, to make the above-identified application special based on applicant's age as set forth in M.P.E.P. § 708.02, Section IV.

The petition is **GRANTED**.

A grantable petition to make an application special under 37 CFR 1.102(c)(1) and MPEP § 708.02, Section IV: Applicant's Age must be accompanied by evidence showing that at least one of the applicants is 65 years of age, or more, such as a birth certificate or a statement by applicant. No fee is required

The instant petition includes the certification of inventor David Brown, attesting to his age. Accordingly, the above-identified application has been accorded "special" status.

Telephone inquiries concerning either the examination or status of the application should be directed to the Technology Center at 571-272-3700.

Inquiries concerning this decision should be directed to the undersigned at 571-272-7253.

The application is being forwarded to the Technology Center Art Unit 3766 for action on the merits commensurate with this decision.

/Monica A. Graves/
Petitions Examiner, Office of Petitions

UNITED STATES PATENT AND TRADEMARK OFFICE

Commissioner for Patents
United States Patent and Trademark Office
P.O. Box 1450
Alexandria, VA 22313-1450
www.uspto.gov

RECEIVED
OCT 11 2006
BY:

BSH HOME APPLIANCES CORPORATION
INTELLECTUAL PROPERTY DEPARTMENT
100 BOSCH BOULEVARD
NEW BERN NC 28562

COPY MAILED

OCT 03 2006

OFFICE OF PETITIONS

In re Application of	:
Tilmann LORENZ et al.	: DECISION ON PETITIONS
Application No. 10/774,978	: UNDER 37 CFR 1.183 AND
Filed: February 9, 2004	: UNDER 37 CFR 1.78(a)(3)
Attorney Docket No. 2001P18006WOUS	:

This is a decision on the petition under 37 CFR 1.183, filed March 20, 2006, requesting waiver of 37 CFR 1.78(a)(3) as that rule operates in conjunction with 37 CFR 1.17(t), and a decision on the petition under 37 CFR 1.78(a)(3), filed April 28, 2006, to accept an unintentionally delayed claim under 35 U.S.C. § 120 and 365(c) for the benefit of priority to prior-filed PCT Application No. PCT/EP02/08840, filed August 7, 2002, set forth in the accompanying Application Data Sheet.

The petition under 37 CFR 1.183 is **DISMISSED** as moot in view of the request filed April 28, 2006, withdrawing the petition to waive the surcharge fee requirement of 37 CFR 1.78(a)(3). No fee has been assessed to petitioner's deposit account for the petition under 37 CFR 1.183.

The petition under 37 CFR 1.78(a)(3) is **GRANTED.**

A petition for acceptance of a claim for late priority under 37 CFR 1.78(a)(3) is only applicable to those applications filed on or after November 29, 2000. Further, the petition is appropriate only after the expiration of the period specified in 37 CFR 1.78(a)(2)(ii). In addition, the petition under 37 CFR 1.78(a)(3) must be accompanied by:

(1) the reference required by 35 U.S.C. § 120 and 37 CFR 1.78(a)(2)(i) of the prior-filed application, unless previously submitted;
(2) the surcharge set forth in § 1.17(t); and
(3) a statement that the entire delay between the date the claim was due under 37 CFR 1.78(a)(2)(ii) and the date the claim was filed was unintentional. The Commissioner may require additional information where there is a question whether the delay was unintentional.

All the above requirements having been satisfied, the late claim for priority under 35 U.S.C. § 120 and 365(c) is accepted as being unintentionally delayed.

The granting of the petition to accept the delayed benefit claim to the prior-filed application under 37 CFR 1.78(a)(3) should not be construed as meaning that the application is entitled to the benefit of the prior-filed application. In order for the application to be entitled to the benefit of the prior-filed application, all other requirements under 35 U.S.C. §§ 120 and 365(c) and 37 CFR 1.78(a)(1) and (a)(2) must be met. Similarly, the fact that the corrected Filing Receipt accompanying this decision on petition includes the prior-filed application should not be construed as meaning that applicant is entitled to the claim for benefit of priority to the prior-filed application noted thereon. Accordingly, the examiner will, in due course, consider this benefit claim and determine whether the application is entitled to the benefit of the earlier filing date.

A corrected Filing Receipt, which includes the priority claim to the prior-filed application, accompanies this decision on petition.

Any inquiries concerning this decision may be directed to David Bucci at (571) 272-7099. All other inquiries concerning either the examination procedures or status of the application should be directed to the Technology Center.

This application is being forwarded to the examiner of Technology Center Art Unit 1746 for appropriate action on the amendment filed April 28, 2006, including consideration of applicant's entitlement to claim benefit of priority under 35 U.S.C. § 120 and 365(c) to the above-noted, prior-filed PCT application.

David Bucci
Petitions Examiner
Office of Petitions

ATTACHMENT: Corrected Filing Receipt

UNITED STATES PATENT AND TRADEMARK OFFICE

Commissioner for Patents
United States Patent and Trademark Office
P.O. Box 1450
Alexandria, VA 22313-1450
www.uspto.gov

CHRISTIE, PARKER & HALE, LLP
PO BOX 7068
PASADENA CA 91109-7068

COPY MAILED

JUN 12 2009

OFFICE OF PETITIONS

In re Application of Root et al. Application No. 12/384,378 Filed: April 3, 2009 Attorney Docket No. 63307/H702	DECISION GRANTING PETITION

This is a decision on the "PETITION FOR REVIEW RE NOTICE OF OMITTED ITEM(S) IN A NON PROVISIONAL APPLICATION PURSAUNT TO CFR §1.53 (e)" filed May 22, 2009 requesting to accept figures 1, 2 , 4, 7, 8, 13, 15, 16 and 17 as part of the original disclosure.

The application was filed on April 3, 2009. However, on April 22, 2009, the Office of Patent Application Processing mailed a Notice of Omitted Items in a Nonprovisional Application, "Notice" stating that the application had been accorded a filing date of April 3, 2009, but figures 1, 2, 4, 7, 8, 13, 15, 16 and 17 as described in the specification appeared to have been omitted.

In response, the present petition was filed wherein Petitioner contends figures 1, 2 , 4, 7, 8, 13, 15, 16 and 17 were filed on April 3, 2009. In support, a copy of applicants' return postcard receipt, which lists "18 sheets of drawings", accompanies the petition. The petition is further accompanied by a copy of figures 1, 2, 4, 7, 8, 13, 15, 16 and 17.

Applicants' postcard receipt is prima facie evidence that 18 sheets of drawings including figures 1, 2, 4, 7, 8, 13, 15, 16 and 17 as described in the specification were received on April 3, 2009. The Office is in receipt of only 9 pages, which does not include figures 1, 2 , 4, 7, 8, 13, 15, 16 and 17. Therefore, it is concluded that at least 18 pages of drawings including figures 1, 2 , 4, 7, 8, 13, 15, 16 and 17 were received on April 3, 2009, as shown in counsel's file, and later misplaced in the office.

The petition is Granted to the extent indicated above. The $400.00 petition fee will be refunded.

Figures 1, 2, 4, 7, 8, 13, 15, 16 and 17 supplied on May 22, 2009, will be used for processing and examination purposes.

The application will be returned to the Office of Patent Application Processing for further processing with a filing date of April 3, 2009, using the drawings submitted on April 3, 2009 and substitute figures 1, 2, 4, 7, 8, 13, 15, 16 and 17 supplied with the petition on May 22, 2009.

Telephone inquiries specific to this matter should be directed to the undersigned at (571) 272 -3215.

Charlema Grant

Charlema R. Grant
Petitions Attorney
Office of Petitions

UNITED STATES PATENT AND TRADEMARK OFFICE

Commissioner for Patents
United States Patent and Trademark Office
P.O. Box 1450
Alexandria, VA 22313-1450
www.uspto.gov

Leonard Storch
Apt. 11F
175 West 72nd Street
New York NY 10023-3207

COPY MAILED

JUN 0 5 2009

OFFICE OF PETITIONS

In re Application of	:	
Leonard Storch	:	
Application No. 12/384,605	:	DECISION ON PETITION
Filed: April 7, 2009	:	TO MAKE SPECIAL UNDER
Attorney Docket No. N/A	:	37 CFR 1.102(c)(1)
	:	

This is a decision on the petition under 37 CFR 1.102(c)(1), filed April 7, 2009, to make the above-identified application special based on applicant's age as set forth in M.P.E.P. § 708.02, Section IV.

The petition is **GRANTED**.

A grantable petition to make an application special under 37 CFR 1.102(c)(1) and MPEP § 708.02, Section IV: Applicant's Age must be accompanied by evidence showing that at least one of the applicants is 65 years of age, or more, such as a birth certificate or a statement by applicant. No fee is required

The instant petition includes a statement from the applicant declaring that he is 65 years of age or older. Accordingly, the above-identified application has been accorded "special" status.

Telephone inquiries concerning this decision should be directed to Terri Williams at 571-272-2991.

All other inquiries concerning either the examination or status of the application should be directed to the Technology Center.

The application is being forwarded to the Technology Center Art Unit 3641 for action on the merits commensurate with this decision.

Terri Williams

Terri Williams
Petitions Examiner
Office of Petitions

UNITED STATES PATENT AND TRADEMARK OFFICE

Commissioner for Patents
United States Patent and Trademark Office
P.O. Box 1450
Alexandria, VA 22313-1450
www.uspto.gov

MAILED
JAN 14 2010
OFFICE OF PETITIONS

MAILED
JAN 14 2010
OFFICE OF PETITIONS

William T. Morrison Jr.
4917 Top Royal Lane
Jacksonville FL 32277

In re Application of William T. Morrison Jr. Application No. 12/384,684 Filed: April 8, 2009 Attorney Docket No.	DECISION ON PETITION TO MAKE SPECIAL UNDER 37 CFR 1.102(c)(1)

This is a decision on the petition under 37 CFR 1.102(c)(1), filed April 8, 2009, to make the above-identified application special based on applicant's age as set forth in MPEP § 708.02, Section IV.

The petition is **GRANTED**.

A grantable petition to make an application special under 37 CFR 1.102(c)(1) and MPEP § 708.02, Section IV: Applicant's Age must be accompanied by evidence showing that at least one of the applicants is 65 years of age, or more, such as a birth certificate or a statement by applicant. No fee is required

The instant petition includes a statement by the inventor. Accordingly, the above-identified application has been accorded "special" status.

Telephone inquiries concerning this decision should be directed to JoAnne Burke at 571-272-4584.

All other inquiries concerning either the examination or status of the application should be directed to the Technology Center.

The application is being forwarded to the Technology Center Art Unit 3691 for action on the merits commensurate with this decision.

JoAnne Burke
Petitions Examiner
Office of Petitions

UNITED STATES PATENT AND TRADEMARK OFFICE

UNITED STATES DEPARTMENT OF COMMERCE
United States Patent and Trademark Office
Address: COMMISSIONER FOR PATENTS
P.O. Box 1450
Alexandria, Virginia 22313-1450
www.uspto.gov

APPLICATION NO.	FILING DATE	FIRST NAMED INVENTOR	ATTORNEY DOCKET NO.	CONFIRMATION NO.
12/384,696	04/08/2009	Anil Paryani	TES010	3192

45147 7590 02/22/2010
PATENT LAW OFFICE OF DAVID G. BECK
P. O. BOX 1146
MILL VALLEY, CA 94942

EXAMINER

ART UNIT	PAPER NUMBER
2857	

MAIL DATE	DELIVERY MODE
02/22/2010	PAPER

Please find below and/or attached an Office communication concerning this application or proceeding.

The time period for reply, if any, is set in the attached communication.

UNITED STATES PATENT AND TRADEMARK OFFICE

Commissioner for Patents
United States Patent and Trademark Office
P.O. Box 1450
Alexandria, VA 22313-1450
www.uspto.gov

PATENT LAW OFFICE OF DAVID G. BECK
P. O. BOX 1146
MILL VALLEY CA 94942

In re Application of	:	
PARYANI et al.	:	DECISION ON PETITION
Application No. 12/384,696	:	TO MAKE SPECIAL UNDER
Filed: 08 April 2009	:	THE GREEN TECHNOLOGY
Attorney Docket No. TES010	:	PILOT PROGRAM

This is a decision on the petition under 37 CFR 1.102, filed 11 December 2009, to make the above-identified application special under the pilot program for applications pertaining to Green Technologies as set forth 74 Federal Register Notice 64666 (December 8, 2009).

The petition is **DISMISSED**.

If reconsideration of this decision is desired, a petition for reconsideration must be filed within ONE (1) MONTH OR THIRTY (30) DAYS from the mail date of this decision, whichever is longer. No extension of this time limit can be granted under 37 CFR 1.136(a) or (b). The petition for reconsideration should include an exhaustive attempt to provide the lacking item(s) noted below, since, after a decision on the petition for reconsideration, no further reconsideration or review of the matter will be undertaken by the Director.

A grantable petition to make an application special under 37 CFR 1.102 and the pilot program as set forth in 74 FR 64666 must be directed to a nonprovisional application filed under 35 USC 111(a) or be a national stage entry under 35 USC 371, exclusive of any reissue applications and be filed prior to the date of the notice, December 8, 2009.

In order to qualify for special status, the following requirements must be met. 1) The application must be classified in one of the eligible US classifications listed in section VI of the notice. 2) The application must have no more than 3 independent claims and no more than 20 total claims. 3) The application must not contain any multiple dependent claims. 4) The petition must state the basis for seeking special status, i.e., the claimed invention either: A) materially enhances the quality of the environment or B) materially contributes to: i) the discovery or development of renewable energy resources, ii) the more efficient utilization and conservation of energy resources, or iii) greenhouse gas emission reduction. 5) If the disclosure is not clear on its face that the claimed invention materially contributes under category (A) or (B), the petition must be accompanied by a statement by the applicant, assignee, or an attorney/agent registered to practice before the Office explaining how the materiality standard is met. 6) A statement that applicant will agree to make an election without traverse in a telephonic interview if a restriction requirement is made by the examiner. 7) The petition to make special must be filed

electronically. 8) The petition must be filed at least one day prior to the date that a first Office Action appears in the Patent Application Information Retrieval (PAIR) system. 9) The petition must be accompanied by a request for early publication in compliance with 37 CFR 1.219 and include the publication fee as set forth in 37 CFR 1.18(d).

The requirement for a fee for consideration of the petition to make special for applications pertaining to Green Technologies has been waived.

The petition lacks item 1 above.

In regard to item 1, petitioner should note that this application has been classified in an area (USPC 702/063) that is not one of the eligible US classifications listed in section VI of the notice. Therefore, this application is not eligible for the Pilot Program. The classification limitations are purposefully made to be narrow for the Pilot Program; however, these may be expanded based upon the success of the Pilot Program. Petitioner may file a preliminary amendment that would cause this application to be classified elsewhere. However, while petitioner may suggest a classification (see, e.g., MPEP 708.02(a)(VII)(C)), the application will be assigned to the most appropriate classification based upon current U.S. classification guidelines. Furthermore, a petition for the Pilot Program should not be filed until and unless all of the requirements set forth in the Notice are met; i.e., a petition should not be filed for an application that is currently classified outside the eligible classifications set forth in the Notice.

Any reconsideration of this decision should be submitted through the USPTO electronic filing system, EFS-Web, and selecting the document description of "Petition for Green Tech Pilot" on the EFS-Web screen.

Telephone inquires concerning this decision should be directed to Lee W. Young at 571-272-4549.

The application is being forwarded to the Technology Center Art Unit 2857 for action on the merits commensurate with this decision.

Lee W. Young
Quality Assurance Specialist
Technology Center 2800

UNITED STATES PATENT AND TRADEMARK OFFICE

Commissioner for Patents
United States Patent and Trademark Office
P.O. Box 1450
Alexandria, VA 22313-1450
www.uspto.gov

BERNARD MIGLER
1405 AUTUMN LANE
CHERRY HILL NJ 08003-3014

MAILED

JUL 06 2009

OFFICE OF PETITIONS

In re Application of	:	
Bernard Migler	:	
Application No. 12/384,783	:	DECISION ON
Filed: April 9, 2009	:	PETITION TO WITHDRAW
Attorney Docket No.	:	FROM RECORD
	:	

This is a decision on the petition under 37 CFR 1.102(c)(1), filed April 9, 2009, to make the above-identified application special based on applicant's age as set forth in M.P.E.P. § 708.02, Section IV.

The petition is **GRANTED**.

A grantable petition to make an application special under 37 CFR 1.102(c)(1) and MPEP § 708.02, Section IV: Applicant's Age must be accompanied by evidence showing that at least one of the applicants is 65 years of age, or more, such as a birth certificate or a statement by applicant. No fee is required

The instant petition includes a statement by the applicant that he/she is 65 years of age or older. Accordingly, the above-identified application has been accorded "special" status.

Telephone inquiries concerning this decision should be directed to Kimberly Inabinet at 571-272-4618.

All other inquiries concerning the status of the application should be directed to the Office of Patent Examination Processing at 571-272-4000.

Upon completion of the pre-examination processing by the Office of Patent Application Processing, this application will be referred to Technology Center 3745 for action on the merits commensurate with this decision.

Kimberly Inabinet

Kimberly Inabinet
Petitions Examiner
Office of Petitions

UNITED STATES PATENT AND TRADEMARK OFFICE

Commissioner for Patents
United States Patent and Trademark Office
P.O. Box 1450
Alexandria, VA 22313-1450
www.uspto.gov

COPY MAILED

JUN 24 2009

OFFICE OF PETITIONS

Aleksandr Smushkovich
P.O. Box 140505
Brooklyn, NY 11214

In re Application of	:	
Anatoly Blank et al.	:	
Application No. 12/384,803	:	DECISION ON
Filed: April 9, 2009	:	PETITION TO WITHDRAW
Attorney Docket No.	:	FROM RECORD

This is a decision on the petition under 37 CFR 1.102(c)(1), filed April 9, 2009, to make the above-identified application special based on applicant's age as set forth in M.P.E.P. § 708.02, Section IV.

The petition is **GRANTED**.

A grantable petition to make an application special under 37 CFR 1.102(c)(1) and MPEP § 708.02, Section IV: Applicant's Age must be accompanied by evidence showing that at least one of the applicants is 65 years of age, or more, such as a birth certificate or a statement by applicant. No fee is required

The instant petition includes a photocopy of applicant's passport. Accordingly, the above-identified application has been accorded "special" status.

Telephone inquiries concerning this decision should be directed to Kimberly Inabinet at 571-272-4618.

All other inquiries concerning the status of the application should be directed to the Office of Patent Examination Processing at 571-272-4000.

Upon completion of the pre-examination processing by the Office of Patent Application Processing, this application will be referred to Technology Center 2834 for action on the merits commensurate with this decision.

Kimberly Inabinet

Kimberly Inabinet
Petitions Examiner
Office of Petitions

UNITED STATES PATENT AND TRADEMARK OFFICE

Commissioner for Patents
United States Patent and Trademark Office
P.O. Box 1450
Alexandria, VA 22313-1450
www.uspto.gov

WILSON SONSINI GOODRICH AND ROSATI
650 PAGE MILL RD.
PALO ALTO, CA 94304-1050

COPY MAILED
MAR 08 2010

In re Application of	:	
Mendez et al.	:	DECISION ON PETITION
Application No. 12/384,893	:	TO WITHDRAW
Filed: April 8, 2009	:	FROM RECORD
Attorney Docket No. 0706US-CIP1	:	

This is a decision on the Request to Withdraw as attorney or agent of record under 37 C.F.R. § 1.36(b), filed December 30, 2009.

The request is **NOT APPROVED** because it is moot.

A review of the file record indicates that on February 22, 2010 the power of attorney to Wilson Sonsini Goodrich and Rosati was revoked by the assignee of the patent application. Accordingly, the request to withdraw under 37 C.F.R. § 1.36(b) is moot.

All future communications from the Office will be directed to the below-listed address until otherwise notified by applicant.

Telephone inquires concerning this decision should be directed to the undersigned at 571-272- 7751. All other inquires concerning either the examination or status of the application should be directed to the Technology Center.

Joan Olszewski

Joan Olszewski
Petitions Examiner
Office of Petitions

cc: Sapphire Energy
3115 Merryfield Row
San Diego CA 92121

UNITED STATES PATENT AND TRADEMARK OFFICE

Commissioner for Patents
United States Patent and Trademark Office
P.O. Box 1450
Alexandria, VA 22313-1450
www.uspto.gov

COPY MAILED

JUL 2 0 2009

OFFICE OF PETITIONS

ROCHE PALO ALTO LLC
PATENT LAW DEPT. M/S A2-250
3431 HILLVIEW AVENUE
PALO ALTO CA 94304

In re Application of	:	
Puentener et al.	:	
Application No. 12/384,954	:	ON PETITION
Deposited: April 10, 2009	:	
Attorney Docket No. R0413A-ORD	:	

This is in response to the "PETITION TO AMEND THE APPLICATION TO INCORPORATE INADVERTENTLY OMITTED DRAWINGS UNDER 37 C.F.R. 1.57(a)" filed May 28, 2009 and supplemented June 1, 2009, requesting that the above-referenced application be accorded a filing date of April 10, 2009. This petition is being treated pursuant to 37 CFR 1.53(e)(2)[1].

Application papers in the above-identified application were deposited on April 10, 2009. However, on May 1, 2009, the Office of Patent Application Processing mailed applicants a "Notice of Incomplete Nonprovisional Application," notifying applicants that the application papers had not been accorded a filing date because the application was deposited without drawings. In response, applicants timely filed this petition. Applicants request that the application be amended to include the inadvertently omitted drawings on the basis that the application as filed contained a prior benefit claim under 37 CFR 1.55 or 1.78.

Petitioner's arguments and evidence have been considered. However, a review of the application confirms that, as filed, the application contained at least one composition and process claim. MPEP 601.01(f) provides that:

> It has been USPTO practice to treat an application that contains at least one process or method claim as an application for which a drawing is not necessary for an understanding of the invention under 35 U.S.C. 113 (first sentence). The same practice has been followed in composition applications.

Thus, pursuant to § 601.01(f), a drawing is not considered essential for a filing date. The instant application is entitled to a filing date without drawings present in the application.

Accordingly, the Office should have granted the application a filing date and mailed a Notice of Omitted Items instead of a Notice of Incomplete Nonprovisional Application. As stated in MPEP 601.01(g) under the section entitled, "Application Entitled to a Filing Date," applicant

[1] Any request for review of a notification pursuant to paragraph (e)(1) of this section, or a notification that the original application papers lack a portion of the specification or drawing(s), must be by way of a petition pursuant to this paragraph accompanied by the fee set forth in § 1.17(f). In the absence of a timely (§ 1.181(f)) petition pursuant to this paragraph, the filing date of an application in which the applicant was notified of a filing error pursuant to paragraph (e)(1) of this section will be the date the filing error is corrected.

may submit an amendment to include the inadvertently omitted portion of the drawing(s) pursuant to 37 CFR 1.57(a):

> [i]f an application was filed on or after September 21, 2004, and contains a claim under 37 CFR 1.55 for priority of a prior-filed foreign application, or a claim under 37 CFR 1.78 for the benefit of a prior-filed provisional, nonprovisional, or international application that was present on the filing date of the application, and the omitted portion of the drawing(s) was inadvertently omitted from the application and is completely contained in the prior-filed application[.]

Please note that no petition is required and that the amendment must comply with 37 CFR 1.57(a) and 37 CFR 1.121. See MPEP § 201.17. Any amendment to include the inadvertently omitted drawing(s) will be considered by the examiner.

To the extent the instant petition requests a filing date of April 10, 2009 with no drawings present in the application, the petition is **GRANTED**.

Given the basis for granting this petition, the petition fee is being refunded.

Pursuant to this decision, the application will be referred to Office of Patent Application Processing for:

- **correction of the filing date to April 10, 2009**;
- **for indication in Office records, as appropriate, that "0" sheets of drawings were present on filing** and
- **for issuance of a filing receipt.**

Entry of any amendment filed will be determined by the examiner.

Telephone inquiries concerning this matter may be directed to Charlema Grant at (571) 272-3215.

Anthony Knight
Supervisor
Office of Petitions

UNITED STATES PATENT AND TRADEMARK OFFICE

UNITED STATES DEPARTMENT OF COMMERCE
United States Patent and Trademark Office
Address: COMMISSIONER FOR PATENTS
P.O. Box 1450
Alexandria, Virginia 22313-1450
www.uspto.gov

APPLICATION NO.	FILING DATE	FIRST NAMED INVENTOR	ATTORNEY DOCKET NO.	CONFIRMATION NO.
12/385,010	03/27/2009	Young-Gil Yoo	P58180A	7950

7590 06/30/2010
ROBERT E. BUSHNELL & LAW FIRM
2029 K STREET NW
SUITE 600
WASHINGTON, DC 20006-1004

EXAMINER
WILLIAMS, ALEXANDER O

ART UNIT	PAPER NUMBER
2826	

NOTIFICATION DATE	DELIVERY MODE
06/30/2010	ELECTRONIC

DECISION DISMISSING PETITION UNDER 37 CFR 1.138(d)

The declaration of express abandonment will not be recognized

This is in response to the petition under 37 CFR 1.138(d), requesting for a refund of any previously paid search fee and excess claims fee in the above-identified application.

The petition is dismissed.

The express abandonment will **not** be recognized for the reason(s) indicated below:

1. ☑ The petition was not filed in sufficient time to permit the appropriate officials to recognize the abandonment before an examination has been made of the application. See 37 CFR 1.138(d).
2. ☐ The petition was not signed by a party authorized by 37 CFR 1.33(b)(1), (3) or (4).
3. ☐ The application is not an application filed under 35 U.S.C. 111(a) on or after December 8, 2004.
4. ☐ The petition for express abandonment under 1.138(d) is dismissed because the applicant did not pay any search fee and excess claims fees in the above-identified application.

Telephone inquiries should be directed to the Office of Data Management at (571) 272-4200.

Patent Publication Branch
Office of Data Management

FORM PET651D (Rev. 08/07)

UNITED STATES PATENT AND TRADEMARK OFFICE

UNITED STATES DEPARTMENT OF COMMERCE
United States Patent and Trademark Office
Address: COMMISSIONER FOR PATENTS
P.O. Box 1450
Alexandria, Virginia 22313-1450
www.uspto.gov

APPLICATION NO.	FILING DATE	FIRST NAMED INVENTOR	ATTORNEY DOCKET NO.	CONFIRMATION NO.
12/385,081	03/30/2009	Hisao Kawaura	DP-1522US	3932

7590 05/18/2010
MCGINN INTELLECTUAL PROPERTY LAW GROUP, PLLC
8321 OLD COURTHOUSE ROAD
SUITE 200
VIENNA, VA 22182-3817

EXAMINER
KIM, ROBERT H

ART UNIT	PAPER NUMBER
2881	

MAIL DATE	DELIVERY MODE
05/18/2010	PAPER

DECISION GRANTING PETITION UNDER 37 CFR 1.138(d)

The declaration of express abandonment is recognized

This is in response to the petition under 37 CFR 1.138(d), requesting for a refund of any previously paid search fee and excess claims fee in the above-identified application.

The petition is granted.

The express abandonment is recognized. Any previously paid search fee and excess claims fee are hereby refunded.

Telephone inquiries should be directed to the Office of Data Management at (571) 272-4200.

Nioni Farmer

Patent Publication Branch
Office of Data Management

Adjustment date: 05/18/2010 [illegible]
03/31/2009 MAHMED1 00000055 12385081
02 FC:1111 -540.00 OP

FORM PET651G (Rev. 08/07)

UNITED STATES PATENT AND TRADEMARK OFFICE

Commissioner for Patents
United States Patent and Trademark Office
P.O. Box 1450
Alexandria, VA 22313-1450
www.uspto.gov

COPY MAILED

JUL 06 2009

OFFICE OF PETITIONS

MICHAEL TOBIAS
SUITE 300
1629 K STREET, NW
WASHINGTON, DC 20006

In re Application of	:	
Edward TYGARD	:	
Application No. 12/385,166	:	DECISION ON PETITION
Filed: March 31, 2009	:	TO MAKE SPECIAL UNDER
Attorney Docket No. 1130	:	37 CFR 1.102(c)(1)
	:	

This is a decision on the petition under 37 CFR 1.102(c)(1), filed June 2, 2009, to make the above-identified application special based on applicant's age as set forth in M.P.E.P. § 708.02, Section IV.

The petition is **GRANTED**.

A grantable petition to make an application special under 37 CFR 1.102(c)(1) and MPEP § 708.02, Section IV: Applicant's Age must be accompanied by evidence showing that at least one of the applicants is 65 years of age, or more, such as a birth certificate or a statement by applicant. No fee is required

The instant petition includes a declaration statement signed by the applicant. Accordingly, the above-identified application has been accorded "special" status.

This application is being referred back to the Office of Patent Application Processing. This application will be accorded "special" status when pre-examination processing is done.

Telephone inquiries concerning this decision should be directed to the undersigned at 571-272-6735.

Diane Goodwyn
Petitions Examiner
Office of Petitions

UNITED STATES PATENT AND TRADEMARK OFFICE

Commissioner for Patents
United States Patent and Trademark Office
P.O. Box 1450
Alexandria, VA 22313-1450
www.uspto.gov

COPY MAILED
JAN 26 2010

OLIFF & BERRIDGE, PLC
P.O. BOX 320850
ALEXANDRIA VA 22320-4850

In re Application of	:	
Wayne E. Voice et al.	:	
Application No. 12/385,206	:	DECISION ON PETITION
Filed: April 1, 2009	:	
Attorney Docket No. 141120	:	

This is a decision on the PETITION TO RESET A PERIOD FOR RESPONSE DUE TO LATE RECEIPT OF A NOTICE TO FILE MISSING PARTS, filed August 3, 2009, which is being treated as a petition under 37 CFR 1.181 (no fee) requesting withdrawal of the holding of abandonment in the above-identified application.

The petition is **DISMISSED**.

Any request for reconsideration of this decision should be filed within two (2) months from the mail date of this decision. *Note* 37 CFR 1.181(f). The request for reconsideration should include a cover letter and be entitled as a "Renewed Petition under 37 CFR 1.181 to Withdraw the Holding of Abandonment."

This application is held abandoned for failure to reply to the Notice to File Missing Parts of Nonprovisional Application (Notice) mailed May 19, 2009, which set a two (2) month period for reply. A Notice of Abandonment has not yet been mailed in this application.

Petitioner asserts that the Office action dated May 19, 2009 was not received.

A review of the written record indicates no irregularity in the mailing of the Notice, and, in the absence of any irregularity, there is a strong presumption that the Office action was properly mailed to the practitioner at the address of record. This presumption may be overcome by a showing that the Office action was not in fact received. In this regard, the showing required to establish the failure to receive the Office action must consist of the following:

1. a statement from practitioner stating that the Office action was not received by the practitioner;

2. a statement from the practitioner attesting to the fact that a search of the file jacket and docket records indicates that the Office action was not received; and

3. a copy of the docket record where the non-received Office action would have been entered had it been received must be attached to and referenced in the practitioner's statement.

See MPEP § 711.03(c) under subheading "Petition to Withdraw Holding of Abandonment Based on Failure to Receive Office Action," and "Withdrawing the Holding of Abandonment When Office Actions Are Not Received," 1156 Official Gazette 53 (November 16, 1993).

The petition fails to satisfy all of the above-stated requirements.

Accordingly, absent the required evidence to establish non-receipt of the Notice of May 19, 2009, the petition requesting withdrawal of the holding of abandonment cannot be granted at this time.

If petitioner cannot supply the evidence necessary to withdraw the holding of abandonment, or simply does not wish to, petitioner should consider filing a petition under 37 CFR 1.137(b) stating that the delay was unintentional. Public Law 97-247, § 3, 96 Stat. 317 (1982), which revised patent and trademark fees, amended 35 U.S.C. § 41(a)(7) to provide for the revival of an "unintentionally" abandoned application without a showing that the delay in prosecution or in late payment of the issue fee was "unavoidable." This amendment to 35 U.S.C. § 41(a)(7) has been implemented in 37 CFR 1.137(b). An "unintentional" petition under 37 CFR 1.137(b) must be accompanied by the $1,620 petition fee.

The filing of a petition under 37 CFR 1.137(b) cannot be intentionally delayed and therefore must be filed promptly. A person seeking revival due to unintentional delay cannot make a statement that the delay was unintentional unless the entire delay, including the date it was discovered that the application was abandoned until the filing of the petition to revive under 37 CFR 1.137(b), was unintentional. A statement that the delay was unintentional is not appropriate if petitioner intentionally delayed the filing of a petition for revival under 37 CFR 1.137(b).

Further correspondence with respect to this matter should be addressed as follows:

By Mail: Mail Stop PETITION
Commissioner for Patents
P. O. Box 1450
Alexandria, VA 22313-1450

By hand: U. S. Patent and Trademark Office
Customer Service Window, Mail Stop Petitions
Randolph Building
401 Dulany Street
Alexandria, VA 22314

By facsimile: **(571) 273-8300**
Attn: Office of Petitions

Telephone inquiries concerning this decision should be directed to Carl Friedman at (571) 272-6842.

Carl Friedman
Petitions Examiner
Office of Petitions

UNITED STATES PATENT AND TRADEMARK OFFICE

Commissioner for Patents
United States Patent and Trademark Office
P.O. Box 1450
Alexandria, VA 22313-1450
www.uspto.gov

MAILED

FEB 25 2010

OFFICE OF PETITIONS

OLIFF & BERRIDGE, PLC
P.O. BOX 320850
ALEXANDRIA VA 22320-4850

In re Application of	:	
Wayne E. Voice et al.	:	
Application No. 12/385,206	:	DECISION ON PETITION
Filed: April 1, 2009	:	
Attorney Docket No. 141120	:	

This is a decision on the Response to Decision On Petition filed February 2, 2010, which is being treated as a renewed petition under 37 CFR 1.181 (no fee) requesting withdrawal of the holding of abandonment in the above-identified application.

The petition is **GRANTED**.

This application was held abandoned for failure to reply to the Notice to File Missing Parts of Nonprovisional Application (Notice) mailed May 19, 2009, which set a two (2) month shortened statutory period for reply.

Petitioner asserts that the Notice, dated May 19, 2009, was not received.

The petition under 37 CFR 1.181 filed August 3, 2009 was dismissed in a decision mailed January 26, 2010.

A review of the written record indicates no irregularity in the mailing of the Office action, and, in the absence of any irregularity, there is a strong presumption that the Office action was properly mailed to the practitioner at the address of record. This presumption may be overcome by a showing that the Office action was not in fact received. In this regard, the showing required to establish the failure to receive the Office action must consist of the following:

1. a statement from practitioner stating that the Office action was not received by the practitioner;

2. a statement from the practitioner attesting to the fact that a search of the file jacket and docket records indicates that the Office action was not received; and

3. a copy of the docket record where the non-received Office action would have been entered had it been received and docketed must be attached to and referenced in the practitioner's statement.

See MPEP § 711.03(c) under subheading "Petition to Withdraw Holding of Abandonment Based on Failure to Receive Office Action," and "Withdrawing the Holding of Abandonment When Office Actions Are Not Received," 1156 Official Gazette 53 (November 16, 1993).

The petition satisfies the above-stated requirements. Accordingly, the application was not abandoned in fact.

In view of the above, the Notice of Abandonment is hereby vacated and the holding of abandonment withdrawn.

This application is being referred to the Office of Patent Application Processing for re-mailing the Notice of May 19, 2009. The period for reply will run from the mailing date of the Notice.

Carl Friedman
Petitions Examiner
Office of Petitions

UNITED STATES PATENT AND TRADEMARK OFFICE

COMMISSIONER FOR PATENTS
UNITED STATES PATENT AND TRADEMARK OFFICE
P.O. BOX 1450
ALEXANDRIA, VA 22313-1450
www.uspto.gov

THE NATH LAW GROUP
112 South West Street
Alexandria VA 22314

COPY MAILED
MAR 15 2010

In re Application of	:	
Richard Allen Kohn et al.	:	
Application No. 12/385,215	:	DECISION ON PETITION
Filed: April 1, 2009	:	TO WITHDRAW
Attorney Docket No. 40635U	:	FROM RECORD
	:	

This is a decision on the Request to Withdraw as attorney or agent of record under 37 C.F.R. § 1.36(b), filed January 12, 2010.

The request is **NOT APPROVED.**

The Office will no longer accept address changes to a new practitioner or law firm filed with a Request, absent the filing of a power of attorney to the new representative. The Office will either change the correspondence address of record to the most current address information provided for the assignee of the entire interest who properly became of record under 37 CFR 3.71 or, if no assignee of the entire interest has properly been made of record under 37 CFR 3.71, the most current address information provided for the first named inventor. This change has been made in order to avoid subsequent correspondence being directed to an incorrect address or to a practitioner who has not been appointed as practitioner of record by the applicant.

Accordingly, the request to withdraw from record cannot be approved because the request does not include a forwarding address. When filing a renewed request the address change should be that of : (1) the first named inventor; or (2) an assignee of the entire interest under 37 C.F.R 3.71, who has properly intervened.

If an assignee has intervened in this application, then a Statement under 37 CFR 3.73(b) or a copy of the actual assignment must be submitted to update the application file.

All future communications from the Office will continue to be directed to the above-identified address until otherwise properly notified.

Telephone inquiries concerning this decision should be directed to the undersigned at 571-272-4618.

/Kimberly Inabinet/

Kimberly Inabinet
Petitions Examiner
Office of Petitions

UNITED STATES PATENT AND TRADEMARK OFFICE

Commissioner for Patents
United States Patent and Trademark Office
P.O. Box 1450
Alexandria, VA 22313-1450
www.uspto.gov

COPY MAILED

NOV 16 2009

OFFICE OF PETITIONS

DOWELL & DOWELL
103 ORONOCO ST.
SUITE 220
ALEXANDRIA VA 22314

In re Application of	:	
Doyle et al.	:	
Application No. 12/385,253	:	ON PETITION
Filed: April 2, 2009	:	
Attorney Docket No. 16820	:	

This is a notice regarding your request for acceptance of a fee deficiency submission under 37 CFR 1.28. On September 1, 1998, the Court of Appeals for the Federal Circuit held that 37 CFR 1.28(c) is the sole provision governing the time for correction of the erroneous payment of the issue fee as a small entity. **See DH Technology v. Synergystex International, Inc. 154 F.3d 1333, 47 USPQ2d 1865 (Fed. Cir. Sept. 1, 1998).**

The Office no longer investigates or rejects original or reissue applications under 37 CFR 1.56. **1098 Off. Gaz. Pat. Office 502 (January 3, 1989)**. Therefore, nothing in this Notice is intended to imply that an investigation was done.

Your fee deficiency submission under 37 CFR 1.28 is hereby **ACCEPTED**.

This application is no longer entitled to small entity status. Accordingly, all future fees paid in this application must be paid at the large entity rate.

Telephone inquiries concerning this decision should be directed to Joan Olszewski at (571) 272-7751.

/Liana Walsh/
Liana Walsh
Petitions Examiner
Office of Petitions

UNITED STATES PATENT AND TRADEMARK OFFICE

UNITED STATES DEPARTMENT OF COMMERCE
United States Patent and Trademark Office
Address: COMMISSIONER FOR PATENTS
P.O. Box 1450
Alexandria, Virginia 22313-1450
www.uspto.gov

APPLICATION NO.	FILING DATE	FIRST NAMED INVENTOR	ATTORNEY DOCKET NO.	CONFIRMATION NO.
12/385,320	04/03/2009	Joakim Liljedahl	P73028US0	1327

EXAMINER

ART UNIT	PAPER NUMBER
3782	

MAIL DATE	DELIVERY MODE
02/23/2010	PAPER

7590 02/23/2010
JACOBSON HOLMAN PLLC
400 SEVENTH STREET N.W.
SUITE 600
WASHINGTON, DC 20004

DECISION GRANTING PETITION UNDER 37 CFR 1.138(d)

The declaration of express abandonment is recognized

This is in response to the petition under 37 CFR 1.138(d), requesting for a refund of any previously paid search fee and excess claims fee in the above-identified application.

The petition is granted.

The express abandonment is recognized. Any previously paid search fee and excess claims fee are hereby refunded.

Telephone inquiries should be directed to the Office of Data Management at (571) 272-4200.

Nioni Farmer

Patent Publication Branch
Office of Data Management

Adjustment date: 02/24/2010 NFARMER
02/24/2009 SZEWDIE1 00000155 12385320
02 FC:2111 -270.00 CP

Refund Note
02/24/2010 [illegible]

Credit Card Refund Details $270.00

[illegible]

FORM PET651G (Rev. 08/07)

UNITED STATES PATENT AND TRADEMARK OFFICE

Commissioner for Patents
United States Patent and Trademark Office
P.O. Box 1450
Alexandria, VA 22313-1450
www.uspto.gov

ROSENBERG, KLEIN & LEE
3458 ELLICOTT CENTER DRIVE-SUITE 101
ELLICOTT CITY MD 21043

10/9/09

In re Application of	:	
LEE, KWANG HO	:	DECISION ON REQUEST TO
Application No. 12/385,337	:	PARTICIPATE IN PATENT
Filed: April 6, 2009	:	PROSECUTION HIGHWAY
Attorney Docket No. MR2695-286	:	PILOT PROGRAM AND PETITION
For: VALVE APPARATUS FOR	:	TO MAKE SPECIAL
MOVABLE OXYGEN CYLINDER	:	37 CFR 1.102(d)

This is a decision on the request to participate in the Patent Prosecution Highway (PPH) pilot program and the petition under 37 CFR 1.102(d), filed October 1, 2009 to make the above-identified application special.

The request and petition are GRANTED.

A grantable request to participate in the PPH pilot program and petition to make special require:

1. The U.S. application must validly claim priority under 35 U.S.C. 119(a) to one or more applications filed in the KIPO, note where the KIPO application with similar claims is not the same application from which the U.S. application claims priority that the applicant must identify the relationship between the KIPO application with similar claims and the KIPO priority application;

2. Applicant must submit a copy of:
a. The allowable/patentable claim(s) from the KIPO application(s) or if a copy of the allowable/patentable claims is available via the Dossier Access System (DAS) applicant may request the USPTO obtain a copy from the DAS, however if the USPTO is unable to obtain a copy from the DAS the applicant will be required to submit a copy;
b. An English translation of the allowable/patentable claim(s) and
c. A statement that the English translation is accurate;

3. Applicant must:
a. Ensure all the claims in the U.S. application must sufficiently correspond or be amended to sufficiently correspond to the allowable/patentable claim(s) in the KIPO application(s) and
b. Submit a claims correspondence table in English;

4. Examination of the U.S. application has not begun;

5. Applicant must submit:
a. Documentation of prior office action:
   i. a copy of the office action(s)just prior to the "Decision to Grant a Patent" from each of the KIPO application(s) containing the allowable/patentable claim(s) or
   ii. if the allowable/patentable claims(s) are from a "Notification of Reasons for Refusal" then the Notification of Reasons for Refusal or.
   iii. if the KIPO application is a first action allowance then no office action from the KIPO is necessary should be indicated on the request/petition form;

   Further, if a copy of the documents from a or b above is available via the Dossier Access System (DAS) applicant may request the USPTO obtain a copy from the DAS, however if the USPTO is unable to obtain a copy from the DAS the applicant will be required to submit a copy;
b. An English language translation of the KIPO Office action from (5)(a)(i)-(ii) above
c. A statement that the English translation is accurate;

6. Applicant must submit:
a. An IDS listing the documents cited by the KIPO examiner in the KIPO office action (unless already submitted in this application)
b. Copies of the documents except U.S. patents or U.S. patent application publications (unless already submitted in this application);

7. The required petition fee under 37 CFR 1.17(h).

CONCLUSION

The request to participate in the PPH pilot program and petition comply with the above requirements. Accordingly, the above-identified application has been accorded "special" status. This application is being forwarded to the examiner for action on the merits commensurate with this decision. Telephone inquiries concerning this decision should be directed to Henry C. Yuen, at 571-272-4856. All other inquiries concerning the examination or status of the application should be directed to the Supervisory Patent Examiner Justine Yu, Art Unit 3771, at 571-272-4835 and accessible in the PAIR system at http://uspto.gov/ebc/index.html.

The petition make special is GRANTED.

/Henry C. Yuen/

Henry C. Yuen, Special Programs Examiner
Technology Center 3700 – Mechanical Engineering, Manufacturing and Products
571-272-4856

UNITED STATES PATENT AND TRADEMARK OFFICE

Commissioner for Patents
United States Patent and Trademark Office
P.O. Box 1450
Alexandria, VA 22313-1450
www.uspto.gov

COPY MAILED

SEP 21 2009

OFFICE OF PETITIONS

RADER FISHMAN & GRAUER PLLC
LION BUILDING
1233 20TH STREET N.W., SUITE 501
WASHINGTON DC 20036

In re Application of	:
Masatsugu Tomida et al.	:
Application No. 12/385,339	: DECISION GRANTING PETITION
Filed: April 6, 2009	:
Attorney Docket No.: SON-4205	:

This is a decision on the petition filed August 10, 2009, in response to the "Notice of Omitted Items" mailed June 22, 2009, which is treated under 37 CFR 1.182.

The instant application was filed April 6, 2009 and a filing date was accorded. However on June 22, 2009 a Notice of Omitted Items was mailed and indicated that Figures 40A, 40B, 41 and 42 described in the specification appeared to have been omitted.

Petitioner asserts that Figures 40A, 40B, 41 and 42 were among the papers filed on April 6, 2009, and submits, *inter alia*, a "legible" postcard receipt in evidence thereof. While only thirty-seven (37) sheets of drawing figures is of record, the postcard receipt, identifies the application and acknowledges, inter alia, that the application included 39 sheets of drawings including 45 Drawing Figures (which would include 40A, 40B, 41 and 42) and bears a United States Patent and Trademark Office date-stamp of April 6, 2009. Additionally, the postcard receipt lacks any notation of non-receipt of any item listed. In view thereof, the petition is **GRANTED.**

Given the basis for granting the petition, the petition fee in the amount of $400 will be credited to deposit account no. 18-0013.

This matter will be forwarded to the Office of Patent Application Processing for further processing, using the application papers received in the Office on April 6, 2009 and Figures 40A, 40B, 41 and 42 submitted on petition August 10, 2009.

Telephone inquiries regarding this decision should be directed to the undersigned Petitions Attorney at (571) 272-3212.

Patricia Faison-Ball

Patricia Faison-Ball
Senior Petitions Attorney
Office of Petitions

UNITED STATES PATENT AND TRADEMARK OFFICE

Commissioner for Patents
United States Patent and Trademark Office
P.O. Box 1450
Alexandria, VA 22313-1450
www.uspto.gov

LITMAN LAW OFFICES, LTD.
POST OFFICE BOX 15035
CRYSTAL CITY STATION
ARLINGTON, VA 22215-0035

COPY MAILED

MAY 06 2009

OFFICE OF PETITIONS

In re Application of	:	
Albert Hamilton DAVIS, SR.	:	
Application No. 12/385,359	:	DECISION ON PETITION
Filed: April 6, 2009	:	TO MAKE SPECIAL UNDER
Attorney Docket No. 30414.02	:	37 CFR 1.102(c)(1)
	:	

This is a decision on the petition under 37 CFR 1.102(c)(1), filed April 6, 2009, to make the above-identified application special based on applicant's age as set forth in M.P.E.P. § 708.02, Section IV.

The petition is **GRANTED**.

A grantable petition to make an application special under 37 CFR 1.102(c)(1) and MPEP § 708.02, Section IV: Applicant's Age must be accompanied by evidence showing that at least one of the applicants is 65 years of age, or more, such as a birth certificate or a statement by applicant. No fee is required

The instant petition includes a declaration statement signed by the applicant. Accordingly, the above-identified application has been accorded "special" status.

Telephone inquiries concerning this decision should be directed to the undersigned at 571-272-6735.

All other inquiries concerning either the examination or status of the application should be directed to the Technology Center.

The application is being forwarded to Technology Center Art Unit 3746 for action on the merits commensurate with this decision.

Diane Goodwyn
Petitions Examiner
Office of Petitions

UNITED STATES PATENT AND TRADEMARK OFFICE

Commissioner for Patents
United States Patent and Trademark Office
P.O. Box 1450
Alexandria, VA 22313-1450
www.uspto.gov

THE NATH LAW GROUP
112 South West Street
Alexandria VA 22314

MAILED

MAR 2 9 2010

OFFICE OF PETITIONS

In re Application of	:	
Arthur Deboeck, et al.	:	DECISION ON PETITION
Application No. 12/385,518	:	TO WITHDRAW
Filed: April 9, 2009	:	FROM RECORD
Attorney Docket No. 40636U	:	

This is a decision on the request to withdraw as attorney of record under 37 CFR § 1.36, filed January 14, 2010.

The request is **NOT APPROVED**.

The request cannot be approved because it lacks a forwarding correspondence address of the first named inventor or a properly intervening assignee.

If the forwarding correspondence address is to the assignee, the Office will only accept correspondence address changes to the most current address information provided for the assignee of the entire interest *that properly became of record under 37 CFR 3.71.* 37 CFR 3.71(c) states:

> *An assignee becomes of record either in a national patent application or a reexamination proceeding by filing a statement in compliance with § 3.73(b) that is signed by a party who is authorized to act on behalf of the assignee.*

The assignee must establish its ownership of the patent to the satisfaction of the Director. In this regard, the statement under 37 CFR 3.73(b) must have either: (i) documentary evidence of a chain of title from the original owner to the assignee (*e.g.*, copy of an executed assignment), and a statement affirming that the documentary evidence of the chain of title from the original owner to the assignee was or concurrently is being submitted for recordation pursuant to § 3.11; or (ii) a statement specifying where documentary evidence of a chain of title from the original owner to the assignee is recorded in the assignment records of the Office (*e.g.*, reel and frame number).

All future communications from the Office will continue to be directed to the above-listed address until otherwise notified by applicant.

Telephone inquires concerning this decision should be directed to the undersigned at (571) 272-2991.

Terri Johnson
Petitions Examiner
Office of Petitions

cc: **GALEPHAR PHARMACEUTICAL RESEARCH INC.**
c/o William E. Beaumont
627 South Asaph Street
Alexandria, VA 22314

UNITED STATES PATENT AND TRADEMARK OFFICE

UNITED STATES DEPARTMENT OF COMMERCE
United States Patent and Trademark Office
Address: COMMISSIONER FOR PATENTS
P.O. Box 1450
Alexandria, Virginia 22313-1450
www.uspto.gov

APPLICATION NO.	FILING DATE	FIRST NAMED INVENTOR	ATTORNEY DOCKET NO.	CONFIRMATION NO.
12/385,570	04/13/2009	Neil M. MacKie	075122-0143	8348

22428 7590 02/05/2010
FOLEY AND LARDNER LLP
SUITE 500
3000 K STREET NW
WASHINGTON, DC 20007

EXAMINER

ART UNIT	PAPER NUMBER
1795	

MAIL DATE	DELIVERY MODE
02/05/2010	PAPER

Please find below and/or attached an Office communication concerning this application or proceeding.

The time period for reply, if any, is set in the attached communication.

UNITED STATES PATENT AND TRADEMARK OFFICE

Commissioner for Patents
United States Patent and Trademark Office
P.O. Box 1450
Alexandria, VA 22313-1450
www.uspto.gov

FOLEY AND LARDNER LLP
SUITE 500
3000 K STREET NW
WASHINGTON DC 20007

FEB 05 2010

In re Application of	:	
Mackie et al.	:	DECISION ON PETITION
Application No. 12/385,570	:	TO MAKE SPECIAL UNDER
Filed: 4/13/2009	:	THE GREEN TECHNOLOGY
Attorney Docket No. **075122-0143**	:	PILOT PROGRAM

This is a decision on the petition under 37 CFR 1.102, filed 12/11/2009, to make the above-identified application special under the pilot program for applications pertaining to Green Technologies as set forth 74 Federal Register Notice 64666 (December 8, 2009).

The petition is **DISMISSED**.

If reconsideration of this decision is desired, a petition for reconsideration must be filed within ONE (1) MONTH OR THIRTY (30) DAYS from the mail date of this decision, whichever is longer. No extension of this time limit can be granted under 37 CFR 1.136(a) or (b). The petition for reconsideration should include an exhaustive attempt to provide the lacking item(s) noted below, since, after a decision on the petition for reconsideration, no further reconsideration or review of the matter will be undertaken by the Director.

A grantable petition to make an application special under 37 CFR 1.102 and the pilot program as set forth in 74 FR 64666 must be directed to a nonprovisional application filed under 35 USC 111(a) or be a national stage entry under 35 USC 371, exclusive of any reissue applications and be filed prior to the date of the notice, December 8, 2009.

In order to qualify for special status, the following requirements must be met. 1) The application must be classified in one of the eligible US classifications listed in section VI of the notice. 2) The application must have no more than 3 independent claims and no more than 20 total claims. 3) The application must not contain any multiple dependent claims. 4) The petition must state the basis for seeking special status, i.e., the claimed invention either: A) materially enhances the quality of the environment or B) materially contributes to: i) the discovery or development of renewable energy resources, ii) the more efficient utilization and conservation of energy resources, or iii) greenhouse gas emission reduction. 5) If the disclosure is not clear on its face that the claimed invention materially contributes under category (A) or (B), the petition must be

accompanied by a statement by the applicant, assignee, or an attorney/agent registered to practice before the Office explaining how the materiality standard is met. 6) A statement that applicant will agree to make an election without traverse in a telephonic interview if a restriction requirement is made by the examiner. 7) The petition to make special must be filed electronically. 8) The petition must be filed at least one day prior to the date that a first Office Action appears in the Patent Application Information Retrieval (PAIR) system. 9) The petition must be accompanied by a request for early publication in compliance with 37 CFR 1.219 and include the publication fee as set forth in 37 CFR 1.18(d).

The requirement for a fee for consideration of the petition to make special for applications pertaining to Green Technologies has been waived.

The petition lacks item(s) 1.

In regard to item 1, petitioner should note that this application has been classified in an area (USPC 204/192.250) that is not one of the eligible US classifications listed in section VI of the notice. Therefore, this application is not eligible for the Pilot Program. The classification limitations are purposefully made to be narrow for the Pilot Program; however, these may be expanded based upon the success of the Pilot Program. Petitioner may file a preliminary amendment that would cause this application to be classified elsewhere. However, while petitioner may suggest a classification (see, e.g., MPEP 708.02(a)(VII)(C)), the application will be assigned to the most appropriate classification based upon current U.S. classification guidelines. Furthermore, a petition for the Pilot Program should not be filed until and unless all of the requirements set forth in the Notice are met; i.e., a petition should not be filed for an application that is currently classified outside the eligible classifications set forth in the Notice.

Any reconsideration of this decision should be submitted through the USPTO electronic filing system, EFS-Web, and selecting the document description of "Petition for Green Tech Pilot" on the EFS-Web screen.

Telephone inquiries concerning this decision should be directed to Tom Dunn at 571-272-1171.

The application is being forwarded to the Technology Center Art Unit 1795 for action in its regular turn.

/Tom Dunn/

Tom Dunn
Quality Assurance Specialist
Technology Center 1700

UNITED STATES PATENT AND TRADEMARK OFFICE

UNITED STATES DEPARTMENT OF COMMERCE
United States Patent and Trademark Office
Address: COMMISSIONER FOR PATENTS
P.O. Box 1450
Alexandria, Virginia 22313-1450
www.uspto.gov

APPLICATION NO.	FILING DATE	FIRST NAMED INVENTOR	ATTORNEY DOCKET NO.	CONFIRMATION NO.
12/385,570	04/13/2009	Neil M. MacKic	075122-0143	8348

22428 7590 06/02/2010
FOLEY AND LARDNER LLP
SUITE 500
3000 K STREET NW
WASHINGTON, DC 20007

EXAMINER

ART UNIT	PAPER NUMBER
1795	

MAIL DATE	DELIVERY MODE
06/02/2010	PAPER

Please find below and/or attached an Office communication concerning this application or proceeding.

The time period for reply, if any, is set in the attached communication.

UNITED STATES PATENT AND TRADEMARK OFFICE

Commissioner for Patents
United States Patent and Trademark Office
P.O. Box 1450
Alexandria, VA 22313-1450
www.uspto.gov

FOLEY AND LARDNER LLP
SUITE 500
3000 K STREET NW
WASHINGTON DC 20007

JUN 0 2 2010

In re Application of	:	
Mackie et al.	:	DECISION ON PETITION
Application No. 12/385,570	:	TO MAKE SPECIAL UNDER
Filed: 4/13/2009	:	THE GREEN TECHNOLOGY
Attorney Docket No. **075122-0143**	:	PILOT PROGRAM

This is a decision on the petition under 37 CFR 1.102, filed 5/25/2010, to make the above-identified application special under the pilot program for applications pertaining to Green Technologies as set forth 74 Federal Register Notice 64666 (December 8, 2009).

The petition is **GRANTED**.

A grantable petition to make an application special under 37 CFR 1.102 and the pilot program as set forth in 74 FR 64666 must be directed to a nonprovisional application filed under 35 USC 111(a) or be a national stage entry under 35 USC 371, exclusive of any reissue applications and be filed prior to the date of the notice, December 8, 2009.

In order to qualify for special status, the following requirements must be met. 1) The application must have no more than 3 independent claims and no more than 20 total claims. 2) The application must not contain any multiple dependent claims. 3) The petition must state the basis for seeking special status, i.e., the claimed invention either: A) materially enhances the quality of the environment or B) materially contributes to: i) the discovery or development of renewable energy resources, ii) the more efficient utilization and conservation of energy resources, or iii) greenhouse gas emission reduction. 4) If the disclosure is not clear on its face that the claimed invention materially contributes under category (A) or (B), the petition must be accompanied by a statement by the applicant, assignee, or an attorney/agent registered to practice before the Office explaining how the materiality standard is met. 5) A statement that applicant will agree to make an election without traverse in a telephonic interview if a restriction requirement is made by the examiner. 6) The petition to make special must be filed electronically. 7) The petition must be filed at least one day prior to the date that a first Office Action appears in the Patent Application Information Retrieval (PAIR) system. 8) The petition must be accompanied by a request for early publication in compliance with 37 CFR 1.219 and include the publication fee as set forth in 37 CFR 1.18(d).

The requirement for a fee for consideration of the petition to make special for applications pertaining to Green Technologies has been waived.

The instant petition complies with items 1 – 8 above. Accordingly, the above-identified application has been accorded "special" status.

Telephone inquires concerning this decision should be directed to Tom Dunn at 571-272-1171.

The application is being forwarded to the Technology Center Art Unit 1795 for action on the merits commensurate with this decision.

/Tom Dunn/

Tom Dunn
Quality Assurance Specialist
Technology Center 1700

UNITED STATES PATENT AND TRADEMARK OFFICE

UNITED STATES DEPARTMENT OF COMMERCE
United States Patent and Trademark Office
Address: COMMISSIONER FOR PATENTS
P.O. Box 1450
Alexandria, Virginia 22313-1450
www.uspto.gov

APPLICATION NO.	FILING DATE	FIRST NAMED INVENTOR	ATTORNEY DOCKET NO.	CONFIRMATION NO.
12/385,595	04/14/2009	Tetsuro Adachi	01-1878	3924

7590 04/21/2010
POSZ LAW GROUP, PLC
12040 SOUTH LAKES DRIVE
SUITE 101
RESTON, VA 20191

EXAMINER
MANCHO, RONNIE M

ART UNIT	PAPER NUMBER
3664	

MAIL DATE	DELIVERY MODE
04/21/2010	PAPER

DECISION GRANTING PETITION UNDER 37 CFR 1.138(d)

The declaration of express abandonment is recognized

This is in response to the petition under 37 CFR 1.138(d), requesting for a refund of any previously paid search fee and excess claims fee in the above-identified application.

The petition is granted.

The express abandonment is recognized. Any previously paid search fee and excess claims fee are hereby refunded.

Telephone inquiries should be directed to the Office of Data Management at (571) 272-4200.

Nimi Farmer

Patent Publication Branch
Office of Data Management

Adjustment date: 04/22/2010 NFARMER
04/15/2009 DEMMANN1 00000119 12385595
02 FC:1111 -540.00 OP

FORM PET651G (Rev. 08/07)

UNITED STATES PATENT AND TRADEMARK OFFICE

Commissioner for Patents
United States Patent and Trademark Office
P.O. Box 1450
Alexandria, VA 22313-1450
www.uspto.gov

LEHMAN BROTHERS INC.
C/O MORGAN, LEWIS & BOCKIUS, LLP
1111 PENNSYLVANIA AVE. N.W.
WASHINGTON DC 20004

MAILED

FEB 16 2010

OFFICE OF PETITIONS

In re Application of:	:	
Virtuoso et al.	:	DECISION DISMISSING
Application No.: 12/385846	:	PETITION UNDER
Filing or 371(c) Date: 04/21/2009	:	37 CFR 1.47(a)
Title of Invention:	:	
SYSTEM AND METHOD FOR SECURE	:	
REMOTE COMPUTER TASK AUTOMATION	:	:

This Decision is in response to the "Petition Under 37 CFR § 1.47(a) for the Signing Joint Inventor to make this Application on Behalf of the Nonsigning Joint Inventor," filed September 8, 2009, to allow the other inventor(s) to proceed with the application on behalf of himself or herself and the nonsigning inventor(s).

The petition is **dismissed**.

Rule 47 applicant is given TWO (2) MONTHS from the mailing date of this decision to reply, correcting the below-noted deficiencies. Any reply should be entitled "Request for Reconsideration of Petition Under [insert the applicable code section]"; should only address the deficiencies noted below, except that the reply may include an oath or declaration executed by the non-signing inventor. Failure to respond will result in abandonment of the application. Any extensions of time will be governed by 37 CFR 1.136(a).

Background

The above-identified application was filed on April 21, 2009, without a fully executed oath or declaration. The Office mailed a Notice to File Missing Parts of Nonprovisional Application on May 7, 2009, requiring *inter alia*, a properly signed oath or declaration.

The present petition

Applicant files the present petition and an oath/declaration executed by one of two inventors. As to the nonsigning inventor, Anthony Virtuoso, Applicant states that the application papers were sent to inventor Virtuoso via email, and that on August 8, 2009, Mr. Virtuoso informed

Applicant via email that he would not be signing the Declaration. No copy of the email from inventor Virtuoso has been provided with the present petition.

Applicable Law, Rules and MPEP

A grantable petition under 37 CFR 1.47(a) requires: (1) proof that the non-signing inventor cannot be reached or refuses to sign the oath or declaration after having been presented with the application papers (specification, claims and drawings); (2) an acceptable oath or declaration in compliance with 35 U.S.C. §§ 115 and 116; (3) the petition fee; and (4) a statement of the last known address of the non-signing inventor. Applicant lacks item (1) set forth above.

As to item (1), the MPEP provides:

> A refusal by an inventor to sign an oath or declaration when the inventor has not been presented with the application papers does not itself suggest that the inventor is refusing to join the application unless it is clear that the inventor understands exactly what he or she is being asked to sign and refuses to accept the application papers. A copy of the application papers should be sent to the last known address of the non-signing inventor, or, if the nonsigning inventor is represented by counsel, to the address of the nonsigning inventor's attorney. The fact that an application may contain proprietary information does not relieve the 37 CFR 1.47 applicant of the responsibility to present the application papers to the inventor if the inventor is willing to receive the papers in order to sign the oath or declaration.

MPEP 409.03(d).

The MPEP further provides

> Proof that a bona fide attempt was made to present a copy of the application papers (specification, including claims, drawings, and oath or declaration) to the nonsigning inventor for signature, but the inventor refused to accept delivery of the papers or expressly stated that the application papers should not be sent, may be sufficient. When there is an express oral refusal, that fact along with the time and place of the refusal must be stated in the statement of facts. When there is an express written refusal, a copy of the document evidencing that refusal must be made part of the statement of facts. The document may be redacted to remove material not related to the inventor's reasons for refusal. (Emphasis supplied).
>
> When it is concluded by the 37 CFR 1.47 applicant that a nonsigning inventor's conduct constitutes a refusal, all facts upon which that conclusion is based should be stated in the statement of facts in support of the petition or directly in the petition. If there is documentary evidence to support facts alleged in the petition or in any statement of facts, such evidence should be submitted. Whenever a nonsigning inventor gives a reason for refusing to sign the application oath or declaration, that reason should be stated in the petition. (Emphasis supplied).

MPEP 409.03(d).

In this instance, Applicant asserts that a copy of the application was sent to the nonsigning inventor via email, and that receipt of the application was confirmed by the inventor via email; however, a copy of he email from the inventor to the Applicant is required.

Conclusion

The petition is dismissed without prejudice. Applicant should file a copy of the email from the nonsigning inventor wherein the nonsigning inventor informed Applicant that he would not be signing the Declaration.

Further correspondence with respect to this matter should be addressed as follows:

By mail: Director for Patents
PO Box 1450
Alexandria, VA 22313-1450

By FAX: (571) 273-8300
Attn: Office of Petitions

By hand: Customer Service Window
Randolph Building
401 Dulany Street
Alexandria, VA 22314

Telephone inquiries should be directed to the undersigned at (571) 272-3232.

/Derek L. Woods/
Derek L. Woods
Attorney
Office of Petitions

UNITED STATES PATENT AND TRADEMARK OFFICE

Commissioner for Patents
United States Patent and Trademark Office
P.O. Box 1450
Alexandria, VA 22313-1450
www.uspto.gov

LEHMAN BROTHERS INC.
C/O MORGAN, LEWIS & BOCKIUS, LLP
1111 PENNSYLVANIA AVE. N.W.
WASHINGTON DC 20004

MAILED

MAY 20 2010

OFFICE OF PETITIONS

In re Application of:	:	
Virtuoso et al.	:	DECISION GRANTING
Application No.: 12/385846	:	PETITION UNDER
Filing or 371(c) Date: 04/21/2009	:	37 CFR 1.47(a)
Title of Invention:	:	
SYSTEM AND METHOD FOR SECURE	:	
REMOTE COMPUTER TASK AUTOMATION	:	:

This Decision is in response to the "Revised Petition Under 37 CFR § 1.47(a) for the Signing Joint Inventor to make this Application on Behalf of the Nonsigning Joint Inventor," filed April 21, 2010, to allow the other inventor(s) to proceed with the application on behalf of himself or herself and the nonsigning inventor(s).

The petition is **granted**.

The above-identified application and papers have been reviewed and found in compliance with 37 CFR 1.47(a). This application is hereby accorded Rule 1.47(a) status.

Petitioner has shown that the non-signing inventor, Anthony Virtuoso, refuses to join in the application.

As provided in Rule 1.47(a), this Office will forward notice of this application's filing to the non-signing inventor at the addresses given in the Petition. Notice of the filing of this application will also be published in the Official Gazette.

The application file is being referred to Technology Center Art Unit 2431 for examination in due course.

Telephone inquiries related to this decision may be directed to the undersigned at (571) 272-3232.

/Derek L. Woods/

Derek L. Woods
Attorney
Office of Petitions

UNITED STATES PATENT AND TRADEMARK OFFICE

Commissioner for Patents
United States Patent and Trademark Office
P.O. Box 1450
Alexandria, VA 22313-1450
www.uspto.gov

MAILED

MAY 20 2010

OFFICE OF PETITIONS

MR. ANTHONY VIRTUOSO
19 ADKINS TERACE
EAST RUTHEFORD, NJ 07073

In re Application of:	:	
Virtuoso et al.	:	
Application No.: 12/385846	:	
Filing or 371(c) Date: 04/21/2009	:	LETTER
Title of Invention:	:	
SYSTEM AND METHOD FOR SECURE	:	
REMOTE COMPUTER TASK AUTOMATION	:	

Dear Mr. Virtuoso:

You are named as a joint inventor in the above-identified United States patent application filed under the provisions of 35 U.S.C. 116 (United States Code) and 37 CFR 1.47(a), Rules of Practice in Patent Cases. Should a patent be granted on the application you will be designated therein as a joint inventor.

As a named inventor you are entitled to inspect any paper in the file wrapper of the application, order copies of all or any part thereof (at a prepaid cost per 37 CFR 1.19) or make your position of record in the application. Alternatively, you may arrange to do any of the preceding through a registered patent attorney or agent presenting written authorization from you. If you care to join the application, counsel of record (see below) would presumably assist you. Joining in the application would entail the filing of an appropriate oath or declaration by you pursuant to 37 CFR 1.63.

Telephone inquiries regarding this communication should be directed to the undersigned at (571) 272-3232. Requests for information regarding your application should be directed to the File Information Unit at (703) 308-2733. Information regarding how to pay for and order a copy of the application, or a specific paper in the application, should be directed to Certification Division at (703) 308-9726 or 1-800-972-6382 (outside the Washington D.C. area).

/Derek L. Woods/

Derek L. Woods
Attorney
Office of Petitions

CC: LEHMAN BROTHERS INC.
C/O MORGAN, LEWIS & BOCKIUS, LLP
1111 PENNSYLVANIA AVE. N.W.
WASHINGTON DC 20004

UNITED STATES PATENT AND TRADEMARK OFFICE

Commissioner for Patents
United States Patent and Trademark Office
P.O. Box 1450
Alexandria, VA 22313-1450
www.uspto.gov

ROPES & GRAY LLP
PATENT DOCKETING 39/41
ONE INTERNATIONAL PLACE
BOSTON, MA 02110-2624

MAILED

JUL 08 2010

OFFICE OF PETITIONS

In re Application of

Frank Daniel McKeon
Application No. 12/386,175
Filed: April 13, 2009
Attorney Docket No. 107616-0001-101

DECISION ON PETITION
TO WITHDRAW
FROM RECORD

This is a decision on the Request to Withdraw as attorney or agent of record under 37 C.F.R. § 1.36(b), filed May 13, 2010.

The request is **APPROVED**.

A grantable request to withdraw as attorney/agent of record must be signed by every attorney/agent seeking to withdraw or contain a clear indication that one attorney is signing on behalf of another/others.

The request was signed by David P. Halstead on behalf of all attorneys of record who are associated with customer No. 28120. All attorneys/agents associated with the Customer Number 28120 have been withdrawn. Applicant is reminded that there is no attorney of record at this time.

The request to change the correspondence of record is not acceptable as the requested correspondence address is not that of: (1) the first named signing inventor; or (2) an intervening assignee of the entire interest under 37 C.F.R 3.71. All future communications from the Office will be directed to the assignee of the entire interest at the first copied address below until otherwise properly notified by the applicant.

There are no pending Office actions at the present time.

Telephone inquiries concerning this decision should be directed to undersigned at 571-272-1642.

All other inquiries concerning the examination or status of this application should be directed to the Technology Center.

/AMW/
April M. Wise
Petitions Examiner
Office of Petitions

cc: FRANK DANIEL MCKEON
C/O CHINA MOLECULAR, LTD
8 RUE DE WALLONIE
STRASBOURG, FRANCE 67000

UNITED STATES PATENT AND TRADEMARK OFFICE

UNITED STATES DEPARTMENT OF COMMERCE
United States Patent and Trademark Office
Address: COMMISSIONER FOR PATENTS
P.O. Box 1450
Alexandria, Virginia 22313-1450
www.uspto.gov

APPLICATION NUMBER	FILING OR 371(C) DATE	FIRST NAMED APPLICANT	ATTY. DOCKET NO./TITLE
12/386,175	04/13/2009	Frank Daniel McKeon	107616-0001-101

CONFIRMATION NO. 1377

POWER OF ATTORNEY NOTICE

28120
ROPES & GRAY LLP
PATENT DOCKETING 39/41
ONE INTERNATIONAL PLACE
BOSTON, MA 02110-2624

OC000000042230606

Date Mailed: 06/22/2010

NOTICE REGARDING CHANGE OF POWER OF ATTORNEY

This is in response to the Power of Attorney filed 05/13/2010.

- The withdrawal as attorney in this application has been accepted. Future correspondence will be mailed to the new address of record. 37 CFR 1.33.

/amwise/

Office of Data Management, Application Assistance Unit (571) 272-4000, or (571) 272-4200, or 1-888-786-0101

UNITED STATES PATENT AND TRADEMARK OFFICE

Commissioner for Patents
United States Patent and Trademark Office
P.O. Box 1450
Alexandria, VA 22313-1450
www.uspto.gov

ROPES & GRAY LLP
PATENT DOCKETING 39/41
ONE INTERNATIONAL PLACE
BOSTON, MA 02110-2624

MAILED

JUL 08 2010

OFFICE OF PETITIONS

In re Application of

Frank Daniel McKeon
Application No. 12/386,175
Filed: April 13, 2009
Attorney Docket No. 107616-0001-101

DECISION ON PETITION
TO WITHDRAW
FROM RECORD

This is a decision on the Request to Withdraw as attorney or agent of record under 37 C.F.R. § 1.36(b), filed May 13, 2010.

The request is **APPROVED**.

A grantable request to withdraw as attorney/agent of record must be signed by every attorney/agent seeking to withdraw or contain a clear indication that one attorney is signing on behalf of another/others.

The request was signed by David P. Halstead on behalf of all attorneys of record who are associated with customer No. 28120. All attorneys/agents associated with the Customer Number 28120 have been withdrawn. Applicant is reminded that there is no attorney of record at this time.

The request to change the correspondence of record is not acceptable as the requested correspondence address is not that of: (1) the first named signing inventor; or (2) an intervening assignee of the entire interest under 37 C.F.R 3.71. All future communications from the Office will be directed to the assignee of the entire interest at the first copied address below until otherwise properly notified by the applicant.

There are no pending Office actions at the present time.

Telephone inquiries concerning this decision should be directed to undersigned at 571-272-1642.

All other inquiries concerning the examination or status of this application should be directed to the Technology Center.

/AMW/
April M. Wise
Petitions Examiner
Office of Petitions

cc: FRANK DANIEL MCKEON
C/O CHINA MOLECULAR, LTD.
8 RUE DE WALLONIE
STRASBOURG, FRANCE 67000

UNITED STATES PATENT AND TRADEMARK OFFICE

UNITED STATES DEPARTMENT OF COMMERCE
United States Patent and Trademark Office
Address: COMMISSIONER FOR PATENTS
P.O. Box 1450
Alexandria, Virginia 22313-1450
www.uspto.gov

APPLICATION NUMBER	FILING OR 371(C) DATE	FIRST NAMED APPLICANT	ATTY. DOCKET NO./TITLE
12/386,175	04/13/2009	Frank Daniel McKeon	107616-0001-101

CONFIRMATION NO. 1377

POWER OF ATTORNEY NOTICE

28120
ROPES & GRAY LLP
PATENT DOCKETING 39/41
ONE INTERNATIONAL PLACE
BOSTON, MA 02110-2624

OC000000042230606

Date Mailed: 06/22/2010

NOTICE REGARDING CHANGE OF POWER OF ATTORNEY

This is in response to the Power of Attorney filed 05/13/2010.

- The withdrawal as attorney in this application has been accepted. Future correspondence will be mailed to the new address of record. 37 CFR 1.33.

/amwise/

Office of Data Management, Application Assistance Unit (571) 272-4000, or (571) 272-4200, or 1-888-786-0101

UNITED STATES PATENT AND TRADEMARK OFFICE

Commissioner for Patents
United States Patent and Trademark Office
P.O. Box 1450
Alexandria, VA 22313-1450
www.uspto.gov

JAMES C. WRAY
1493 CHAIN BRIDGE ROAD
SUITE 300
MCLEAN VA 22101

MAILED

AUG 13 2009

OFFICE OF PETITIONS

In re Application of :
Marmann, et al. : ON PETITION
Application No.: 12/386,271 :
Filed: April 15, 2009 :
Attorney Docket No.: SCHULTE :

This is a decision on the petition under 37 CFR 1.47(a), filed July 2, 2009.

The petition is **DISMISSED**.

Any request for reconsideration of this decision must be submitted within TWO (2) MONTHS from the mail date of this decision. Extensions of time under 37 CFR 1.136(a) are permitted. Any response should be entitled "Request for Reconsideration of Petition Under 37 CFR 1.47(a)" and may include an oath or declaration executed by the inventor. **Failure to respond will result in abandonment of the application.**

A grantable petition under 37 CFR 1.47(a) requires:

(1) a petition including proof of the pertinent facts establishing that the joint inventor(s) refuses to join, or cannot be found or reached after diligent effort,
(2) a proper oath or Declaration executed by the available joint inventor(s),
(3) the petition fee of $200, and
(4) the last known address of the omitted inventor(s).

This petition lacks item (1) above.

As to item (1), petitioner has failed to establish that Mr. Marmann refused to join in the filing of the above-identified application.

The Office requires that the non-signing inventor be provided with a complete copy of the application as filed. This includes the specification with claims, drawings, if any, and a declaration. See MPEP 409.03(d). The translation of the May 25, 2009 letter from Mr. Schulte to Mr. Marmann does not establish that a complete copy of the application was presented to Mr. Marmann.

Mr. Marmann must have the complete application in his possession in order to make an informed decision as to whether he joins in its filing. When petitioner can show that Mr. Marmann was mailed or received the complete application and that he either refused to sign the declaration or would not respond to the request that he sign the declaration within a reasonable amount of time, petitioner will have satisfied this requirement.

Where there is an express or oral refusal, that fact, along with the time and place of the refusal, must be stated in an affidavit or declaration by the party to whom the refusal was made. Where there is a written refusal, a copy of the document(s) evidencing that refusal must be made part of the affidavit or declaration.

When it is concluded by the rule 47 applicant that a non-signing inventor's conduct constitutes a refusal, all facts upon which that conclusion is based should be stated in an affidavit or declaration. If there is documentary evidence to support facts alleged in the affidavit or declaration, such evidence must be submitted.

Whenever a non-signing inventor gives a reason for refusing to sign the application oath or declaration, that reason should be stated in the affidavit or declaration.

The statements of facts must be signed, where at all possible, by a person having firsthand knowledge of the facts recited therein and should be accompanied by documentary evidence in support of the statement of facts. It is important that the forthcoming communication contain statements of fact as opposed to conclusions.

Further correspondence with respect to this matter should be addressed as follows:

By mail: Mail Stop PETITION
Commissioner for Patents
Post Office Box 1450
Alexandria, VA 22313-1450

By hand: U.S. Patent and Trademark Office
Customer Service Window, Mail Stop Petition
Randolph Building
401 Dulany Street
Alexandria, VA 22314

By FAX: (571) 273-8300 - ATTN: Office of Petitions

Telephone inquiries should be directed to the undersigned at (571) 272-3230.

Shirene Willis Brantley

Shirene Willis Brantley
Senior Petitions Attorney
Office of Petitions

UNITED STATES PATENT AND TRADEMARK OFFICE

COMMISSIONER FOR PATENTS
UNITED STATES PATENT AND TRADEMARK OFFICE
P.O. BOX 1450
ALEXANDRIA, VA 22313-1450
www.uspto.gov

COPY MAILED

NOV 2 0 2009

OFFICE OF PETITIONS

JAMES C. WRAY
1493 CHAIN BRIDGE ROAD
SUITE 300
MCLEAN VA 22101

In re Application of
Marmann, et al.
Application No.: 12/386,271
Filed: April 15, 2009
Attorney Docket No.: SCHULTE

ON PETITION

This is a decision on the reconsideration petition under 37 CFR 1.47(a), filed October 13, 2009.

The petition is **DISMISSED**.

Any request for reconsideration of this decision must be submitted within TWO (2) MONTHS from the mail date of this decision. Extensions of time under 37 CFR 1.136(a) are permitted. Any response should be entitled "Request for Reconsideration of Petition Under 37 CFR 1.47(a)" and may include an oath or declaration executed by the inventor. **Failure to respond will result in abandonment of the application.**

A grantable petition under 37 CFR 1.47(a) requires:

(1) a petition including proof of the pertinent facts establishing that the joint inventor(s) refuses to join, or cannot be found or reached after diligent effort,
(2) a proper oath or Declaration executed by the available joint inventor(s),
(3) the petition fee of $200, and
(4) the last known address of the omitted inventor(s).

This petition lacks item (1) above.

As to item (1), petitioner has failed to establish that Mr. Marmann refused to join in the filing of the above-identified application.

The Office requires that the non-signing inventor be provided with a complete copy of the application as filed. This includes the specification with claims, drawings, if any, and a declaration. See MPEP 409.03(d).

The reconsideration petition states that Mr. Marmann had the entire content of the U.S. application in his own language in the German application on which the U.S. application is based. The reconsideration petition states that Mr. Marmann knew of the content of the German

and U.S. applications and ordered the filing in Germany and in several countries, including the U.S.. Exhibit 4 is referenced.

As a preliminary matter, Exhibit 4 is only partially translated. Exhibit 4 does not establish that Mr. Marmann had possession of the U.S. application. Exhibit 4 does not establish that Mr. Marmann knew the content of the German and U.S. applications and ordered the filing in Germany and in several countries.

In short, petitioner has not shown through documentary evidence that Mr. Marmann was in possession of the U.S. application.

Mr. Marmann must have the complete application in his possession in order to make an informed decision as to whether he joins in its filing. When petitioner can show that Mr. Marmann was mailed or received the complete application and that he either refused to sign the declaration or would not respond to the request that he sign the declaration within a reasonable amount of time, petitioner will have satisfied this requirement.

Where there is an express or oral refusal, that fact, along with the time and place of the refusal, must be stated in an affidavit or declaration by the party to whom the refusal was made. Where there is a written refusal, a copy of the document(s) evidencing that refusal must be made part of the affidavit or declaration.

When it is concluded by the rule 47 applicant that a non-signing inventor's conduct constitutes a refusal, all facts upon which that conclusion is based should be stated in an affidavit or declaration. If there is documentary evidence to support facts alleged in the affidavit or declaration, such evidence must be submitted.

Whenever a non-signing inventor gives a reason for refusing to sign the application oath or declaration, that reason should be stated in the affidavit or declaration.

The statements of facts must be signed, where at all possible, by a person having firsthand knowledge of the facts recited therein and should be accompanied by documentary evidence in support of the statement of facts. It is important that the forthcoming communication contain statements of fact as opposed to conclusions.

Further correspondence with respect to this matter should be addressed as follows:

By mail: Mail Stop PETITION
Commissioner for Patents
Post Office Box 1450
Alexandria, VA 22313-1450

By hand: U.S. Patent and Trademark Office
Customer Service Window, Mail Stop Petition
Randolph Building
401 Dulany Street
Alexandria, VA 22314

By FAX: (571) 273-8300 - ATTN: Office of Petitions

Telephone inquiries should be directed to the undersigned at (571) 272-3230.

Shirene Willis Brantley

Shirene Willis Brantley
Senior Petitions Attorney
Office of Petitions

UNITED STATES PATENT AND TRADEMARK OFFICE

Commissioner for Patents
United States Patent and Trademark Office
P.O. Box 1450
Alexandria, VA 22313-1450
www.uspto.gov

JAMES C. WRAY
1493 CHAIN BRIDGE ROAD
SUITE 300
MCLEAN VA 22101

MAILED

FEB 01 2010

OFFICE OF PETITIONS

In re Application of Marmann, et al. Application No.: 12/386,271 Filed: April 15, 2009 Attorney Docket No.: SCHULTE	: : : : :	DECISION GRANTING STATUS UNDER 37 CFR 1.47(a)

This is a decision on the reconsideration petition under 37 CFR 1.47(a), filed January 20, 2010.

The petition is **GRANTED**.

Petitioner has shown that the non-signing inventor, Horst Marmann, has constructively refused to join in the filing of the above-identified application.

The application and papers have been reviewed and found in compliance with 37 CFR 1.47(a). This application is hereby accorded Rule 1.47(a) status.

As provided in 37 CFR 1.47(c), this Office will forward notice of this application's filing to the non-signing inventor at the address given in the petition. Notice of the filing of this application will also be published in the Official Gazette.

This application is being referred to the Office of Patent Application Processing for further pre-examination processing.

Telephone inquiries should be directed to the undersigned at (571) 272-3230.

Shirene Willis Brantley

Shirene Willis Brantley
Senior Petitions Attorney
Office of Petitions

UNITED STATES PATENT AND TRADEMARK OFFICE

Commissioner for Patents
United States Patent and Trademark Office
P.O. Box 1450
Alexandria, VA 22313-1450
www.uspto.gov

MAILED

FEB 0 1 2010

OFFICE OF PETITIONS

HORST MARMANN
SCHULWEG 5
40489 DUSSELDORF
GERMANY

In re Application of	:	
Marmann, et al.	:	LETTER
Application No.: 12/386,271	:	
Filed: April 15, 2009	:	
Attorney Docket No.: SCHULTE	:	

Dear Mr. Marmann:

You are named as a joint inventor in the above-identified United States patent application, filed under the provisions of 35 U.S.C. 116 (United States Code), and 37 CFR 1.47(a), Rules of Practice in Patent Cases. Should a patent be granted on the application you will be designated therein as a joint inventor.

As a named inventor you are entitled to inspect any paper in the file wrapper of the application, order copies of all or any part thereof (at a prepaid cost per 37 CFR 1.19) or make your position of record in the application. Alternatively, you may arrange to do any of the preceding through a registered patent attorney or agent presenting written authorization from you. If you care to join the application, counsel of record (see below) would presumably assist you. Joining the application would entail the filing of an appropriate oath or declaration by you pursuant to 37 CFR 1.63.

Telephone inquiries regarding this communication should be directed to the undersigned at (571) 272-3230. Requests for information regarding your application should be directed to the File Information Unit at (703) 308-2733. Information regarding how to pay for and order a copy of the application, or a specific paper in the application, should be directed to the Certification Division at (571) 272-3150 or 1 (800) 972-6382 (outside the Washington, DC area).

Shirene Willis Brantley

Shirene Willis Brantley
Senior Petitions Attorney
Office of Petitions

ATTORNEY OF RECORD: JAMES C. WRAY
1493 CHAIN BRIDGE ROAD
SUITE 300
MCLEAN VA 22101

UNITED STATES PATENT AND TRADEMARK OFFICE

Commissioner for Patents
United States Patent and Trademark Office
P.O. Box 1450
Alexandria, VA 22313-1450
www.uspto.gov

SABIC AMERICAS, INC.
1600 INDUSTRIAL BLVD.
SUGAR LAND TX 77478

MAILED

JUL 3 1 2009

OFFICE OF PETITIONS

In re Application of :
Hazin, et al. :
Application No. 12/386,280 : ON PETITION
Filed: April 16, 2009 :
Attorney Docket No.: **STC-03-0011 CIP** :

This is in response to the "Petition under 37 CFR 1.53(e) or Under 37 CFR 1.57(a) for Filing Date Indicated on Notice of Incomplete Non-Provisional Application as Application Filing Date" filed June 30, 2009, requesting that the above-referenced application be accorded a filing date of April 16, 2009. The petition is being treated pursuant to 37 CFR 1.53(e)(2)[1].

Application papers in the above-identified application were deposited on April 16, 2009. However, on May 7, 2009, the Office of Patent Application Processing mailed applicant a "Notice of Incomplete Non-provisional Application", notifying applicant that the application papers has not been accorded a filing date because the application was deposited without drawings. In response, applicant timely filed this petition. Applicant requests that the application be deemed an application that does not require drawings to understand the invention sought to be patented. Alternatively, applicant request that the application be amended to include the inadvertently omitted drawings on the basis that the application contained a prior benefit claim under 37 CFR 1.55 or 1.78.

Petitioner's argument and evidence have been considered. However, a review of the application confirms that, as filed, the application contained at least one method claim. The Manual of Patent Examining Procedure, Section 601.01(f) provides that:

> It has been USPTO practice to treat an application that contains at least one process or method claim as an application for which a drawing is not necessary for an understanding of the invention under 35 U.S.C. 113 (first sentence). The same practice has been followed in composition applications.

Thus, pursuant to § 601.01(f), a drawing is not considered essential for a filing date. The application is entitled to a filing date without drawings present in the application.

Accordingly, the Office should have mailed a Notice of Omitted Items and not a Notice of Incomplete Nonprovisional Application. As stated in MPEP 601.01(g), if an application is entitled to a filing date, the mailing of a Notice of Omitted Items will permit *inter alia*:

> [i] an application was filed on or after September 21, 2004, and contains a claim under 37 CFR 1.55 for priority of a prior-filed foreign application or a claim under 37 CFR 1.78 for the benefit of a prior-filed

[1] Any request for review of a notification pursuant to paragraph (e)(1) of this section, or notification that the original application papers lack a partition of the specification or drawing(s), must be by way of a petition pursuant to this paragraph accompanied by the fee set forth in § 1.17(f). In the absence of a timely (1.181(f)) petition pursuant to this paragraph, the filing of an application in which the applicant was notified of a filing error pursuant to paragraph (e)(1) of this section will be the date the filing error is corrected.

> provisional, non-provisional, or international application that was present on the filing date of the application, and the omitted portion of the drawing(s) was inadvertently omitted from the application and is completely contained in the prior-filed application[.]

Please note that no petition is required and the amendment must comply with 37 CFR 1.57(a) and 37 CFR 1.121. See MPEP § 201.17. Any amendment to include the inadvertently omitted drawings(s) will be considered by the examiner.

The petition is granted to the extent the instant petition requests a filing date of April 16, 2009, with no drawings present in the application.

Given the basis for granting this petition, the petition fee of $400.00 is being refunded.

Pursuant to this decision, the application will be referred to the Office of Patent Application Processing for:

- correction of the filing date to April 16, 2009;
- for indication in Office records, as appropriate that "0" sheets of drawings were present on filing, and
- for issuance of a filing receipt.

Entry of the amendment filed June 30, 2009, will be determined by the examiner.

Any inquiries related to this decision should be directed to Kenya A. McLaughlin, Petitions Attorney, at (571) 272-3222.

Anthony Knight
Supervisor
Office of Petitions

UNITED STATES PATENT AND TRADEMARK OFFICE

Commissioner for Patents
United States Patent and Trademark Office
P.O. Box 1450
Alexandria, VA 22313-1450
www.uspto.gov

COPY MAILED

MAY 19 2009

OFFICE OF PETITIONS

ALVIN S. BLUM
2350 DELMAR PLACE
FORT LAUDERDALE, FL 33301

In re Application of	:	
Donald T. GOVAN	:	
Application No. 12/386,511	:	DECISION ON PETITION
Filed: April 20, 2009	:	TO MAKE SPECIAL UNDER
Attorney Docket No.	:	37 CFR 1.102(c)(1)
	:	

This is a decision on the petition under 37 CFR 1.102(c)(1), filed April 20, 2009, to make the above-identified application special based on applicant's age as set forth in M.P.E.P. § 708.02, Section IV.

The petition is **GRANTED**.

A grantable petition to make an application special under 37 CFR 1.102(c)(1) and MPEP § 708.02, Section IV: Applicant's Age must be accompanied by evidence showing that at least one of the applicants is 65 years of age, or more, such as a birth certificate or a statement by applicant. No fee is required

The instant petition includes a declaration statement signed by the applicant. Accordingly, the above-identified application has been accorded "special" status.

This application is being referred back to the Office of Patent Application Processing for processing. This application will be accorded "special" status when pre-examination processing is done.

Telephone inquiries concerning this decision should be directed to the undersigned at 571-272-6735.

Diane Goodwyn
Petitions Examiner
Office of Petitions

UNITED STATES PATENT AND TRADEMARK OFFICE

Commissioner for Patents
United States Patent and Trademark Office
P.O. Box 1450
Alexandria, VA 22313-1450
www.uspto.gov

Ira S. Dorman
330 Roberts Street, Suite 200
East Hartford, CT 06108

MAILED

JUL 0 2 2009

OFFICE OF PETITIONS

In re Application of	:	
Richard T. Walsh	:	
Application No. 12/386,593	:	DECISION ON
Filed: April 21, 2009	:	PETITION TO WITHDRAW
Attorney Docket No. WRT-3	:	FROM RECORD
	:	

This is a decision on the petition under 37 CFR 1.102(c)(1), filed April 21, 2009, to make the above-identified application special based on applicant's age as set forth in M.P.E.P. § 708.02, Section IV.

The petition is **GRANTED**.

A grantable petition to make an application special under 37 CFR 1.102(c)(1) and MPEP § 708.02, Section IV: Applicant's Age must be accompanied by evidence showing that at least one of the applicants is 65 years of age, or more, such as a birth certificate or a statement by applicant. No fee is required

The instant petition includes a statement by the applicant that he/she is 65 years of age or older. Accordingly, the above-identified application has been accorded "special" status.

Telephone inquiries concerning this decision should be directed to Kimberly Inabinet at 571-272-4618.

All other inquiries concerning the status of the application should be directed to the Office of Patent Examination Processing at 571-272-4000.

Upon completion of the pre-examination processing by the Office of Patent Application Processing, this application will be referred to Technology Center 3618 for action on the merits commensurate with this decision.

Kimberly Inabinet

Kimberly Inabinet
Petitions Examiner
Office of Petitions

UNITED STATES PATENT AND TRADEMARK OFFICE

Commissioner for Patents
United States Patent and Trademark Office
P.O. Box 1450
Alexandria, VA 22313-1450
www.uspto.gov

COPY MAILED

OCT 0 9 2009

OFFICE OF PETITIONS

Ira S. Dorman
330 Roberts Street, Suite 200
East Hartford, CT 06108

In re Application of	:	
Richard T. Walsh	:	
Application No. 12/386,593	:	CORRECTED DECISION ON
Filed: April 21, 2009	:	PETITION TO MAKE SPECIAL
Attorney Docket No. WRT-3	:	UNDER 37 CFR 1.102(c)(1)
	:	

This is a corrected decision on the petition under 37 CFR 1.102(c)(1), filed April 21, 2009, to make the above-identified application special based on applicant's age as set forth in M.P.E.P. § 708.02, Section IV.

The petition is **GRANTED**.

A grantable petition to make an application special under 37 CFR 1.102(c)(1) and MPEP § 708.02, Section IV: Applicant's Age must be accompanied by evidence showing that at least one of the applicants is 65 years of age, or more, such as a birth certificate or a statement by applicant. No fee is required

The instant petition includes a statement by the applicant that he/she is 65 years of age or older. Accordingly, the above-identified application has been accorded "special" status.

Telephone inquiries concerning this decision should be directed to Kimberly Inabinet at 571-272-4618.

All other inquiries concerning the status of the application should be directed to the Office of Patent Examination Processing at 571-272-4000.

The application is being forwarded to the Technology Center Art Unit 3618 for action on the merits commensurate with this decision.

Kimberly Inabinet

Kimberly Inabinet
Petitions Examiner
Office of Petitions

UNITED STATES PATENT AND TRADEMARK OFFICE

Commissioner for Patents
United States Patent and Trademark Office
P.O. Box 1450
Alexandria, VA 22313-1450
www.uspto.gov

PATENT LAW OFFICE OF DAVID G. BECK
P. O. BOX 1146
MILL VALLEY CA 94942

COPY MAILED
JAN 29 2010

In re Application of	:	
Weston Arthur HERMANN et al	:	DECISION ON PETITION
Application No. 12/386,684	:	TO MAKE SPECIAL UNDER
Filed: April 22, 2009	:	THE GREEN TECHNOLOGY
Attorney Docket No. TES012	:	PILOT PROGRAM

This is a decision on the petition under 37 CFR 1.102, filed December 14, 2009, to make the above-identified application special under the pilot program for applications pertaining to Green Technologies as set forth 74 Federal Register Notice 64666 (December 8, 2009).

The petition is **DISMISSED**.

If reconsideration of this decision is desired, a petition for reconsideration must be filed within ONE (1) MONTH OR THIRTY (30) DAYS from the mail date of this decision, whichever is longer. No extension of this time limit can be granted under 37 CFR 1.136(a) or (b). The petition for reconsideration should include an exhaustive attempt to provide the lacking item(s) noted below, since, after a decision on the petition for reconsideration, no further reconsideration or review of the matter will be undertaken by the Director.

A grantable petition to make an application special under 37 CFR 1.102 and the pilot program as set forth in 74 FR 64666 must be directed to a nonprovisional application filed under 35 USC 111(a) or be a national stage entry under 35 USC 371, exclusive of any reissue applications and be filed prior to the date of the notice, December 8, 2009.

In order to qualify for special status, the following requirements must be met. 1) The application must be classified in one of the eligible US classifications listed in section VI of the notice. 2) The application must have no more than 3 independent claims and no more than 20 total claims. 3) The application must not contain any multiple dependent claims. 4) The petition must state the basis for seeking special status, i.e., the claimed invention either: A) materially enhances the quality of the environment or B) materially contributes to: i) the discovery or development of renewable energy resources, ii) the more efficient utilization and conservation of energy resources, or iii) greenhouse gas emission reduction. 5) If the disclosure is not clear on its face that the claimed invention materially contributes under category (A) or (B), the petition must be accompanied by a statement by the applicant, assignee, or an attorney/agent registered to practice before the Office explaining how the materiality standard is met. 6) A statement that applicant will agree to make an election without traverse in a telephonic interview if a restriction

requirement is made by the examiner. 7) The petition to make special must be filed electronically. 8) The petition must be filed at least one day prior to the date that a first Office Action appears in the Patent Application Information Retrieval (PAIR) system. 9) The petition must be accompanied by a request for early publication in compliance with 37 CFR 1.219 and include the publication fee as set forth in 37 CFR 1.18(d).

The requirement for a fee for consideration of the petition to make special for applications pertaining to Green Technologies has been waived.

The petition lacks items 1 and 5 as explained below.

This application has been classified in an area (USPC 429/163.000) that is not one of the eligible US classifications listed in section VI of the notice. Therefore, this application is not eligible for the Pilot Program. The classification limitations are purposefully made to be narrow for the Pilot Program; however, these may be expanded based upon the success of the Pilot Program. Petitioner may file a preliminary amendment that would cause this application to be classified elsewhere. However, while petitioner may suggest a classification (see, e.g., MPEP 708.02(a)(VII)(C)), the application will be assigned to the most appropriate classification based upon current U.S. classification guidelines. Furthermore, a petition for the Pilot Program should not be filed until and unless all of the requirements set forth in the Notice are met; i.e., a petition should not be filed for an application that is currently classified outside the eligible classifications set forth in the Notice.

In regard to item 5, it is noted the petition includes a statement explaining how the instant application materially contributes to category (B). The instant invention is directed to a "Sealed Battery Enclosure". Petitioner's argument is that the sealed battery pack enclosure of the instant invention significantly reduces battery contamination, contamination taking the form of dust, humidity, liquids, etc. Petitioner also argues that as electric vehicles are able to meet the needs and requirements of the consumer, as well as gain acceptance by the consumer, the reliance on and use of combustion-driven vehicles can be reduced, leading to a reduction in energy consumption via combustion systems and thus a reduction in greenhouse gas emissions. Petitioner should note that contamination reduction is a safety issue and the potential reduction in energy consumption via combustion systems depends on how an end user might use the instant invention. As stated in the notice, the materiality standard does not permit an applicant to speculate as to how a hypothetical end-user might specifically apply the invention in a manner that could materially contribute to category (A) or (B). *Also see MPEP § 708.02 (VI).* Accordingly, it is unclear as to how the <u>claimed</u> invention would materially contribute to category (A) or (B).

Further correspondence with respect to this matter should be addressed as follows:

By Mail: Mail Stop PETITION
Commissioner for Patents
P. O. Box 1450
Alexandria, VA 22313-1450

By hand: U. S. Patent and Trademark Office
Customer Service Window, Mail Stop Petitions

Randolph Building
401 Dulany Street
Alexandria, VA 22314

By FAX: (571) 273-8300

Telephone inquiries concerning this decision should be directed to Olisa Anwah at 571-272-6051.

All other inquiries concerning either the examination or status of the application should be directed to the Technology Center.

The application is being forwarded to the Technology Center Art Unit 1795 for action in its regular turn.

Ramesh Krishnamurthy

Ramesh Krishnamurthy
Petitions Examiner
Office of Petitions

UNITED STATES PATENT AND TRADEMARK OFFICE

Commissioner for Patents
United States Patent and Trademark Office
P.O. Box 1450
Alexandria, VA 22313-1450
www.uspto.gov

WILLIAM A. WALSH, JR.
250 North BAY STREET
MANCHESTER, NEW HAMPSHIRE 03104-2324

COPY MAILED

SEP 30 2009

OFFICE OF PETITIONS

In re Application of	:	
William A. Walsh, Jr.	:	
Application No. 12/386,756	:	DECISION ON PETITION
Filed: April 22, 2009	:	TO MAKE SPECIAL UNDER
Attorney Docket No. None	:	37 CFR 1.102(c)(1)
	:	

This is a decision on the petition under 37 CFR 1.102(c)(1), filed August 7, 2009, to make the above-identified application special based on applicant's age as set forth in M.P.E.P. § 708.02, Section IV.

The petition is **GRANTED**.

A grantable petition to make an application special under 37 CFR 1.102(c)(1) and MPEP § 708.02, Section IV: Applicant's Age must be accompanied by evidence showing that at least one of the applicants is 65 years of age, or more, such as a birth certificate or a statement by applicant. No fee is required

The instant petition includes a statement by applicant. Accordingly, the above-identified application has been accorded "special" status.

Telephone inquiries concerning this decision should be directed to Ella Colbert at 571-272-6741.

All other inquiries concerning either the examination or status of the application should be directed to the Technology Center.

The application is being forwarded to the Technology Center Art Unit 3749 for action on the merits commensurate with this decision.

David Bucci
Petitions Examiner
Office of Petitions

UNITED STATES PATENT AND TRADEMARK OFFICE

Commissioner for Patents
United States Patent and Trademark Office
P.O. Box 1450
Alexandria, VA 22313-1450
www.uspto.gov

MAILED

MAY 13 2010

OFFICE OF PETITIONS

NIKOLAI & MERSEREAU, P.A.
900 SECOND AVENUE SOUTH
SUITE 820
MINNEAPOLIS MN 55402

In re Application of	:	
James V. HARON et al	:	
Application No. 12/387,113	:	DECISION ON PETITION
Filed: April 28, 2009	:	TO MAKE SPECIAL UNDER
Attorney Docket No. **20080631.CIP**	:	37 CFR 1.102(c)(1)
	:	

This is a decision on the petition under 37 CFR 1.102(c)(1), filed May 12, 2010, to make the above-identified application special based on applicant's age as set forth in M.P.E.P. § 708.02, Section IV.

The petition is **GRANTED**.

A grantable petition to make an application special under 37 CFR 1.102(c)(1) and MPEP § 708.02, Section IV: Applicant's Age must be accompanied by evidence showing that at least one of the applicants is 65 years of age, or more, such as a birth certificate or a statement by applicant. No fee is required

The instant petition includes a statement by James V. Haromon attesting to his age. Accordingly, the above-identified application has been accorded "special" status.

Telephone inquiries concerning this decision should be directed to Tredelle Jackson at 571-272-2783.

All other inquiries concerning either the examination or status of the application should be directed to the Technology Center.

The application is being forwarded to the Technology Center Art Unit 3748 for action on the merits commensurate with this decision.

/Tredelle D. Jackson/
Paralegal Specialist
Office of Petitions

UNITED STATES PATENT AND TRADEMARK OFFICE

Commissioner for Patents
United States Patent and Trademark Office
P.O. Box 1450
Alexandria, VA 22313-1450
www.uspto.gov

FLYNN THIEL BOUTELL
& TANIS, P.C.
2026 RAMBLING ROAD
KALAMAZOO MI 49008-1631

COPY MAILED
MAR 08 2010

In re Application of
Gao, et al.
Application No. 12/387,154
Filed: 28 April, 2009
Attorney Docket No. 3700.P0476US

DECISION ON PETITION

This is a decision on the petition filed on 16 November, 2009, pursuant 37 C.F.R. §1.47.

The petition as considered under 37 C.F.R. §1.47(a) is **DISMISSED**.

Rule 47 applicant is given TWO (2) MONTHS from the mailing date of this decision to reply, correcting the below-noted deficiencies. Any reply should be entitled "Request for Reconsideration of Petition Pursuant to 37 C.F.R. §1.47(a)," and should only address the deficiencies noted below, except that the reply may include an oath or declaration executed by the non-signing inventor. **FAILURE TO RESPOND WILL RESULT IN ABANDONMENT OF THE APPLICATION.** Any extensions of time will be governed by 37 C.F.R. §1.136(a).

This is **not** a final agency action within the meaning of 5 U.S.C. §704.

A grantable petition under 37 C.F.R. §1.47(a) requires: (1) petition and fee; (2) proof that the non-signing inventor cannot be reached or refuses to sign the oath or declaration after having been presented with the application papers (specification: description, claims and drawings); (3) an acceptable oath or declaration in compliance with 35 U.S.C. §§ 115 and 116; and (4) a statement of the last known address of the non-signing inventor(s)—with diligence in the effort to ascertain the validity of the address set forth as the reasonably believed to be last known/current/valid address.

Petitioner does not seem to have worked through the requirements of the petition, as set forth above, in satisfaction of those requirements. (*See, generally:* MPEP §409.03, and §409.03(a)—the applicable statute (35 U.S.C.§ 116) requires that a "diligent effort" have been expended in attempting to find or reach the non-signing inventor to ensure transmittal to the non-signing

inventors a copy of the entire application (description, claims, abstract, drawings) with a copy of the transmittal letter) to the non-signing inventor(s).)

In particular, Petitioner, inter alia, has not as of this writing satisfied the requirement(s) of the petition as listed above and discussed below.

Petitioners always are reminded that for transmission by Email of any document to be accepted by the Office, written acknowledgment of receipt and readability will be required.

BACKGROUND

The record reflects as follows:

The application was deposited on 28 April, 2009, without, *inter alia*, a fully executed oath/declaration

On 15 May, 2009, the Office mailed a Notice of Missing Parts requiring, *inter alia*, a fully executed oath/declaration.

On 16 November, 2009, Petitioner Terryence F, Chapman (Reg. No. 32,549) filed, *inter alia*, a petition with fee, and a statement pursuant to 37 C.F.R. §1.47, with an oath/declaration executed by co-inventors Gao and Leaback for themselves and on behalf of non-signing inventor Mingyou Hu, however, the statement by Anthony Llewellyn, averred officer of the averred assignee as to the non-signing inventor evidences that only the oath/declaration and assignment were transmitted to the non-signing inventor, and not the entire application (description, claims, abstract, drawings) as required, and it does not appear that Petitioner has demonstrated diligence brought to the determination of as to current/valid/reasonably believed to be last known address for him—such that this element of the showing also must be clarified on any renewed petition. Petitioner appears not to have obtained from such sources as necessary and presented to the Office the materials required to make the showing(s) necessary pursuant to the regulations at 37 C.F.R. §1.47 and MPEP §409.03 et seq. 409.03.

Petitioner must resolve these matters on any renewed petition and is reminded that a grantable petition under 37 C.F.R. §1.47(a) requires: (1) petition and fee; (2) proof that the non-signing inventor cannot be reached or refuses to sign the oath or declaration after having been presented with the application papers (specification: description, claims and drawings); (3) an acceptable oath or declaration in compliance with 35 U.S.C. §§ 115 and 116; and (4) a statement of the last known address of the non-signing inventor(s)—with diligence in the effort to ascertain the validity of the address set forth as the reasonably believed to be last known/current/valid address.

Petitioner must satisfy the requirements pursuant to the Rule and the guidance in the Commentary at MPEP §409.03, and §409.03(a) et seq.

Petitioners always are reminded that for transmission by Email of any document to be accepted by the Office, written acknowledgment of receipt and readability will be required.

Thus, the present incompleteness of the record makes granting of the instant petition inappropriate.

The availability of applications and application papers online to applicants/practitioners who diligently associate their Customer Number with the respective application(s) now provides an applicant/practitioner on-demand information as to events/transactions in an application. Thus, now if one wishes to know the progress in and/or status of an application or the accuracy of the data therein, one need only look at the file online.

Out of an abundance of caution, Petitioners always are reminded that those registered to practice *and* all others who make representations before the Office must inquire into the underlying facts of representations made to the Office and support averments with the appropriate documentation–since all owe to the Office the continuing duty to disclose.[1]

The instant petition under 37 C.F.R. §1.47(a) is **dismissed**.

Further correspondence with respect to this matter should be addressed as follows:

By mail: Mail Stop PETITIONS
Commissioner for Patents
Post Office Box 1450
Alexandria, VA 22313-1450

By hand: Customer Service Window
Mail Stop Petitions
Randolph Building
401 Dulany Street
Alexandria, VA 22314

By FAX: (571) 273-8300
ATTN: Office of Petitions

[1] See supplement of 17 June, 1999. The Patent and Trademark Office is relying on petitioner's duty of candor and good faith and accepting a statement made by Petitioner. See Changes to Patent Practice and Procedure, 62 Fed. Reg. at 53160 and 53178, 1203 Off. Gaz. Pat. Office at 88 and 103 (responses to comments 64 and 109)(applicant obligated under 37 C.F.R. §10.18 to inquire into the underlying facts and circumstances when providing statements to the Patent and Trademark Office). See specifically, the regulations at 37 C.F.R. §10.18.

While telephone inquiries regarding this decision may be directed to the undersigned at (571) 272-3214—it is noted, however, that all practice before the Office is in writing (see: 37 C.F.R. §1.2[2]) and the proper authority for action on any matter in this regard are the statutes (35 U.S.C.), regulations (37 C.F.R.) and the commentary on policy (MPEP). Therefore, no telephone discussion may be controlling or considered authority for Petitioner's action(s).

/John J. Gillon, Jr./
John J. Gillon, Jr.
Senior Attorney
Office of Petitions

---

[2] The regulations at 37 C.F.R. §1.2 provide:

§1.2 Business to be transacted in writing.

All business with the Patent and Trademark Office should be transacted in writing. The personal attendance of applicants or their attorneys or agents at the Patent and Trademark Office is unnecessary. The action of the Patent and Trademark Office will be based exclusively on the written record in the Office. No attention will be paid to any alleged oral promise, stipulation, or understanding in relation to which there is disagreement or doubt.

UNITED STATES PATENT AND TRADEMARK OFFICE

Commissioner for Patents
United States Patent and Trademark Office
P.O. Box 1450
Alexandria, VA 22313-1450
www.uspto.gov

FLYNN THIEL BOUTELL
& TANIS, P.C.
2026 RAMBLING ROAD
KALAMAZOO MI 49008-1631

MAILED

JUL 06 2010

OFFICE OF PETITIONS

In re Application of
Gao, et al.
Application No. 12/387,154
Filed: 28 April, 2009
Attorney Docket No. 3700.P0476US

DECISION ON PETITION

This is a decision on the petition filed on 14 May, 2010, pursuant 37 C.F.R. §1.47.

NOTE:

In the Decision on Petition of 9 March, 2010, Petitioner was instructed to present on any renewed petition evidence of a diligent effort to ascertain a current/valid/reasonably believed to be last known address. Petitioner's response on 14 May, 2010, was to present a statement that the non-signing inventor "left our company ... and we could not reach him in any method." And in support of that blanket statement Petitioner submitted a single copy of an envelop evidencing non-delivery of a mailing—with no showing of a diligent effort in search.

The petition as considered under 37 C.F.R. §1.47(a) is **DISMISSED**.

Rule 47 applicant is given TWO (2) MONTHS from the mailing date of this decision to reply, correcting the below-noted deficiencies. Any reply should be entitled "Request for Reconsideration of Petition Pursuant to 37 C.F.R. §1.47(a)," and should only address the deficiencies noted below, except that the reply may include an oath or declaration executed by the non-signing inventor. **FAILURE TO RESPOND WILL RESULT IN ABANDONMENT OF THE APPLICATION.** Any extensions of time will be governed by 37 C.F.R. §1.136(a).

This is **not** a final agency action within the meaning of 5 U.S.C. §704.

A grantable petition under 37 C.F.R. §1.47(a) requires: (1) petition and fee; (2) proof that the non-signing inventor cannot be reached or refuses to sign the oath or declaration after having been presented with the application papers (specification: description, claims and drawings); (3) an acceptable oath or declaration in compliance with 35 U.S.C. §§ 115 and 116; and (4) a

statement of the last known address of the non-signing inventor(s)—with diligence in the effort to ascertain the validity of the address set forth as the reasonably believed to be last known/current/valid address.

Petitioner does not seem to have worked through the requirements of the petition, as set forth above, in satisfaction of those requirements. (*See, generally:* MPEP §409.03, and §409.03(a)—the applicable statute (35 U.S.C.§ 116) requires that a "diligent effort" have been expended in attempting to find or reach the non-signing inventor to ensure transmittal to the non-signing inventors a copy of the entire application (description, claims, abstract, drawings) with a copy of the transmittal letter) to the non-signing inventor(s).)

In particular, Petitioner, inter alia, has not as of this writing satisfied the requirement(s) of the petition as listed above and discussed below.

Petitioners always are reminded that for transmission by Email of any document to be accepted by the Office, written acknowledgment of receipt and readability will be required.

BACKGROUND

The record reflects as follows:

The application was deposited on 28 April, 2009, without, *inter alia*, a fully executed oath/declaration

On 15 May, 2009, the Office mailed a Notice of Missing Parts requiring, *inter alia*, a fully executed oath/declaration.

On 16 November, 2009, Petitioner Terryence F, Chapman (Reg. No. 32,549) filed, *inter alia*, a petition with fee, and a statement pursuant to 37 C.F.R. §1.47, with an oath/declaration executed by co-inventors Gao and Leaback for themselves and on behalf of non-signing inventor Mingyou Hu, however, the statement by Anthony Llewellyn, averred officer of the averred assignee as to the non-signing inventor evidences that only the oath/declaration and assignment were transmitted to the non-signing inventor, and not the entire application (description, claims, abstract, drawings) as required, and it does not appear that Petitioner has demonstrated diligence brought to the determination of as to current/valid/reasonably believed to be last known address for him—such that this element of the showing also must be clarified on any renewed petition. Petitioner appears not to have obtained from such sources as necessary and presented to the Office the materials required to make the showing(s) necessary pursuant to the regulations at 37 C.F.R. §1.47 and MPEP §409.03 et seq. 409.03. The petition was dismissed on 3 March, 2010.

On 14 May, 2010, Petitioner re-advanced the petition, this time with a statement by Anthony Llewellyn, averred Secretary of the averred assignee stating that the non-signing inventor "left our company ... and we could not reach him in any method." And in support of that statement Petitioner

submitted a single copy of an envelop evidencing non-delivery of a mailing. Petitioner made no showing of a diligent effort in search. Petitioner—as one registered to practice before the Office—is well aware that this submission wholly fails to satisfy Petitioner's showing requirements under the Rule.

Petitioner must resolve these matters on any renewed petition.

Petitioner is reminded that a grantable petition under 37 C.F.R. §1.47(a) requires: (1) petition and fee; (2) proof that the non-signing inventor cannot be reached or refuses to sign the oath or declaration after having been presented with the application papers (specification: description, claims and drawings); (3) an acceptable oath or declaration in compliance with 35 U.S.C. §§ 115 and 116; and (4) a statement of the last known address of the non-signing inventor(s)—with diligence in the effort to ascertain the validity of the address set forth as the reasonably believed to be last known/current/valid address.

Petitioner must satisfy the requirements pursuant to the Rule and the guidance in the Commentary at MPEP §409.03, and §409.03(a) et seq.

Petitioners always are reminded that for transmission by Email of any document to be accepted by the Office, written acknowledgment of receipt and readability will be required.

Thus, the present incompleteness of the record makes granting of the instant petition inappropriate.

The availability of applications and application papers online to applicants/practitioners who diligently associate their Customer Number with the respective application(s) now provides an applicant/practitioner on-demand information as to events/transactions in an application. Thus, now if one wishes to know the progress in and/or status of an application or the accuracy of the data therein, one need only look at the file online.

Out of an abundance of caution, Petitioners always are reminded that those registered to practice *and* all others who make representations before the Office must inquire into the underlying facts of representations made to the Office and support averments with the appropriate documentation–since all owe to the Office the continuing duty to disclose.[1]

The instant petition under 37 C.F.R. §1.47(a) is **dismissed**.

Further correspondence with respect to this matter should be addressed as follows:

---

[1] See supplement of 17 June, 1999. The Patent and Trademark Office is relying on petitioner's duty of candor and good faith and accepting a statement made by Petitioner. See Changes to Patent Practice and Procedure, 62 Fed. Reg. at 53160 and 53178, 1203 Off. Gaz. Pat. Office at 88 and 103 (responses to comments 64 and 109)(applicant obligated under 37 C.F.R. §10.18 to inquire into the underlying facts and circumstances when providing statements to the Patent and Trademark Office). See specifically, the regulations at 37 C.F.R. §10.18.

By mail: Mail Stop PETITIONS
Commissioner for Patents
Post Office Box 1450
Alexandria, VA 22313-1450

By hand: Customer Service Window
Mail Stop Petitions
Randolph Building
401 Dulany Street
Alexandria, VA 22314

By FAX: (571) 273-8300
ATTN: Office of Petitions

While telephone inquiries regarding this decision may be directed to the undersigned at (571) 272-3214—it is noted, however, that all practice before the Office is in writing (see: 37 C.F.R. §1.2[2]) and the proper authority for action on any matter in this regard are the statutes (35 U.S.C.), regulations (37 C.F.R.) and the commentary on policy (MPEP). Therefore, no telephone discussion may be controlling or considered authority for Petitioner's action(s).

/John J. Gillon, Jr./
John J. Gillon, Jr.
Senior Attorney
Office of Petitions

---

[2] The regulations at 37 C.F.R. §1.2 provide:

§1.2 Business to be transacted in writing.
All business with the Patent and Trademark Office should be transacted in writing. The personal attendance of applicants or their attorneys or agents at the Patent and Trademark Office is unnecessary. The action of the Patent and Trademark Office will be based exclusively on the written record in the Office. No attention will be paid to any alleged oral promise, stipulation, or understanding in relation to which there is disagreement or doubt.

UNITED STATES PATENT AND TRADEMARK OFFICE

Commissioner for Patents
United States Patent and Trademark Office
P.O. Box 1450
Alexandria, VA 22313-1450
www.uspto.gov

DAN M. DELA ROSA, ESQ.
SUITE 24C
300 EAST 77TH STREET
NEW YORK NY 10075

COPY MAILED

JAN 04 2010

In re Application of	:	
Jerry Rayborn Sr.	:	
Application No. 12/387,182	:	DECISION ON PETITION
Filed: April 30, 2009	:	TO MAKE SPECIAL UNDER
Attorney Docket No. **P-0190US**	:	37 CFR 1.102(c)(1)
	:	

This is a decision on the petition under 37 CFR 1.102(c)(1), filed October 26, 2009, to make the above-identified application special based on applicant's age as set forth in M.P.E.P. § 708.02, Section IV.

The petition is **GRANTED**.

A grantable petition to make an application special under 37 CFR 1.102(c)(1) and MPEP § 708.02, Section IV: Applicant's Age must be accompanied by evidence showing that at least one of the applicants is 65 years of age, or more, such as a birth certificate or a statement by applicant. No fee is required

The instant petition includes a statement by Jerry Rayborn, attesting to his age. Accordingly, the above-identified application will be accorded "special" status.

Telephone inquiries concerning this decision should be directed to Tredelle Jackson at 571-272-2783.

All other inquiries concerning either the examination or status of the application should be directed to the Technology Center.

This application is being referred to the Office of Patent Application Processing for processing.
This application will be accorded "special" status when pre-examination processing is done.

/Tredelle D. Jackson/
Paralegal Specialist
Office of Petitions

UNITED STATES PATENT AND TRADEMARK OFFICE

Commissioner for Patents
United States Patent and Trademark Office
P.O. Box 1450
Alexandria, VA 22313-1450
www.uspto.gov

IRVING M. FISHMAN
89 HEADQUARTERS PLAZA
SUITE 1422, NORTH TOWER
MORRISTOWN, NJ 07960

MAILED

JUL 06 2010

OFFICE OF PETITIONS

In re Application of	:	
Barbara Brooke Jennings	:	DECISION ON PETITION
Application No. 12/387,239	:	TO WITHDRAW
Filed: April 30, 2009	:	FROM RECORD
Attorney Docket No. 147.006	:	

This is a decision on the Request to Withdraw as attorney or agent of record under 37 C.F.R. § 1.36(b), filed May 17, 2010.

The request is **APPROVED**.

A grantable request to withdraw as attorney/agent of record must be signed by every attorney/agent seeking to withdraw or contain a clear indication that one attorney is signing on behalf of another/others. The Office will require the practitioner(s) to certify that he, she or they have: (1) given reasonable notice to the client, prior to the expiration of the reply period, which the practitioner(s) intends to withdraw from employment; (2) delivered to the client or a duly authorized representative of the client all papers and property (including funds) to which the client is entitled; and (3) notified the client of any replies that may be due and the time frame within which the client must respond, pursuant to 37 CFR 10.40(c).

The request was signed by Irving M. Fishman on behalf of all practitioners of record.

Irving M. Fishman and all attorneys/agents have been withdrawn. Applicant is reminded that there is no attorney of record at this time.

The correspondence address of record has been changed and the new correspondence address is the address indicated below.

There are no outstanding Office actions that require a reply from the applicant.

Telephone inquires concerning this decision should be directed to the undersigned at (571) 272-6059. All other inquires concerning either the examination or status of the application should be directed to the Technology Center.

A. Kelley

Alicia Kelley
Petitions Examiner
Office of Petitions

cc: BARBARA BROOKE JENNINGS-SPRING
10844 NORTH DOGWOOD TRAIL
JUPITER, FL 33478

UNITED STATES PATENT AND TRADEMARK OFFICE

UNITED STATES DEPARTMENT OF COMMERCE
United States Patent and Trademark Office
Address: COMMISSIONER FOR PATENTS
P.O. Box 1450
Alexandria, Virginia 22313-1450
www.uspto.gov

APPLICATION NUMBER	FILING OR 371(C) DATE	FIRST NAMED APPLICANT	ATTY. DOCKET NO./TITLE
12/387,239	04/30/2009	Barbara Brooke Jennings	147.006

CONFIRMATION NO. 7725

POWER OF ATTORNEY NOTICE

90034
Irving M. Fishman
89 Headquarters Plaza
Suite 1422, North Tower
Morristown, NJ 07960

OC000000042418373

Date Mailed: 07/02/2010

NOTICE REGARDING CHANGE OF POWER OF ATTORNEY

This is in response to the Power of Attorney filed 05/17/2010.

- The withdrawal as attorney in this application has been accepted. Future correspondence will be mailed to the new address of record. 37 CFR 1.33.

/atkelley/

Office of Data Management, Application Assistance Unit (571) 272-4000, or (571) 272-4200, or 1-888-786-0101

UNITED STATES PATENT AND TRADEMARK OFFICE

Commissioner for Patents
United States Patent and Trademark Office
P.O. Box 1450
Alexandria, VA 22313-1450
www.uspto.gov

In re Application of
Zora Singh Gill

Application No. 12387360

Filed: May 1,2009

Attorney Docket No. 16470-2

:DECISION ON PETITION TO MAKE SPECIAL
:UNDER 37 CFR 1.102(c)(1)

This is a decision on the electronic petition under 37 CFR 1.102 (c)(1), filed 11-JUN-2010 to make the above-identified application special based on applicant's age as set forth in MPEP § 708.02, Section IV.

The petition is **GRANTED**.

A grantable petition to make an application special under 37 CFR 1.102(c)(1), MPEP § 708.02, Section IV: Applicant's Age must include a statement by applicant or a registered practitioner having evidence that applicant is at least 65 years of age. No fee is required.

Accordingly, the above-identified application has been accorded "special" status and will be taken up for action by the examiner upon the completion of all pre-examination processing.

Telephone inquiries concerning this electronic decision should be directed to the Electronic Business Center at 866-217-9197.

All other inquiries concerning either the examination or status of the application should be directed to the Technology Center.

UNITED STATES PATENT AND TRADEMARK OFFICE

Commissioner for Patents
United States Patent and Trademark Office
P.O. Box 1450
Alexandria, VA 22313-1450
www.uspto.gov

DEREK A. PAICE
114 ROSEWOOD CT.
PALM HARBOR FL 34685

MAILED

MAY 28 2009

OFFICE OF PETITIONS

In re Application of	:	
PAICE, Derek Albert	:	
Application No. 12/387,440	:	DECISION ON PETITION
Filed: May 04, 2009	:	TO MAKE SPECIAL UNDER
Attorney Docket No. **101355.0015US1**	:	37 CFR 1.102(c)(1)
	:	

This is a decision on the petition under 37 CFR 1.102(c)(1), filed May 04, 2009, to make the above-identified application special based on applicant's age as set forth in M.P.E.P. § 708.02, Section IV.

The petition is **GRANTED**.

A grantable petition to make an application special under 37 CFR 1.102(c)(1) and MPEP § 708.02, Section IV: Applicant's Age must be accompanied by evidence showing that at least one of the applicants is 65 years of age, or more, such as a birth certificate or a statement by applicant. No fee is required

The instant petition includes a statement by Derek Albert Paice attesting that he is over 65 years of age. Accordingly, the above-identified application has been accorded "special" status.

Telephone inquiries concerning this decision should be directed to Michelle R. Eason at 571-272-4231.

All other inquiries concerning either the examination or status of the application should be directed to the Technology Center.

This application is being referred to the Office of Patent Application Processing. This application will be accorded "special" status when pre-examination processing is done.

Michelle R. Eason

Michelle R. Eason
Paralegal Specialist
Office of Petitions

UNITED STATES PATENT AND TRADEMARK OFFICE

Commissioner for Patents
United States Patent and Trademark Office
P.O. Box 1450
Alexandria, VA 22313-1450
www.uspto.gov

DOCKET CLERK
P.O. DRAWER 800889
DALLAS TX 75380

MAILED

JUN 26 2009

OFFICE OF PETITIONS

In re Application of :
Fabris, et al. :
Application No. 12/387,694 :
Filed: May 6, 2009 :
Attorney Docket No. TRAX01-00002 :

DECISION GRANTING PETITION

This is a decision on the petition filed June 8, 2009, under 37 CFR 1.10(c) requesting that the above-cited application be accorded a filing date of May 6, 2009, rather than the presently accorded filing date of May 5, 2009.

Petitioner alleges that the application was deposited with the Express Mail Service on May 6, 2009. In support of the allegation, the petition is accompanied by a copy of the Express Mail postcard with a tracking number EM349617088US showing a "date-in" of May 6, 2009. The tracking number cited is the same number found on the application transmittal sheet that accompanied the original application papers. The evidence is convincing that the application papers were deposited on May 6, 2009.

In view of the above, the petition is granted. The new filing date for the above-cited application is May 6, 2009.

The Office of Patent Application Processing will further process the application with a filing date of May 6, 2009, and issue a corrected filing receipt.

Any inquiries related to this decision should be directed to the undersigned at (571)272-3222.

Kenya A. McLaughlin
Petitions Attorney
Office of Petitions

UNITED STATES PATENT AND TRADEMARK OFFICE

Commissioner for Patents
United States Patent and Trademark Office
P.O. Box 1450
Alexandria, VA 22313-1450
www.uspto.gov

BRUCE H. JOHNSONBAUGH
ECKHOFF & HOPPE
SUITE 2800
101 MONTGOMERY STREET
SAN FRANCISCO CA 94104

COPY MAILED

JUN 0 8 2009

OFFICE OF PETITIONS

In re Application of	:	
LEVIN, Paul D.	:	
Application No. 12/387,767	:	DECISION ON PETITION
Filed: May 07, 2009	:	TO MAKE SPECIAL UNDER
Attorney Docket No. **9662/CIP-1**	:	37 CFR 1.102(c)(1)
	:	

This is a decision on the petition under 37 CFR 1.102(c)(1), filed May 07, 2009, to make the above-identified application special based on applicant's age as set forth in M.P.E.P. § 708.02, Section IV.

The petition is **GRANTED**.

A grantable petition to make an application special under 37 CFR 1.102(c)(1) and MPEP § 708.02, Section IV: Applicant's Age must be accompanied by evidence showing that at least one of the applicants is 65 years of age, or more, such as a birth certificate or a statement by applicant. No fee is required

The instant petition includes a statement by Paul D. Levin attesting that he is over 65 years of age. Accordingly, the above-identified application has been accorded "special" status.

Telephone inquiries concerning this decision should be directed to Michelle R. Eason at 571-272-4231.

All other inquiries concerning either the examination or status of the application should be directed to the Technology Center.

The application is being forwarded to the Technology Center Art Unit 3767 for action on the merits commensurate with this decision.

Michelle R. Eason
Paralegal Specialist
Office of Petitions

UNITED STATES PATENT AND TRADEMARK OFFICE

Commissioner for Patents
United States Patent and Trademark Office
P.O. Box 1450
Alexandria, VA 22313-1450
www.uspto.gov

ABELMAN, FRAYNE & SCHWAB
666 THIRD AVENUE, 10TH FLOOR
NEW YORK NY 10017

COPY MAILED

JUL 0 8 2009

OFFICE OF PETITIONS

In re Application of
Andreas Schell
Application No. 12/387,804
Filed: May 6, 2009
Attorney Docket No. 210,287

DECISION GRANTING PETITION

This is a decision in response to the petition, filed May 27, 2009, styled "Petition Under 37 CFR 1.10(c) to Correct Filing Date" requesting that the above-identified application be accorded a filing date of May 6, 2009.

The petition is **DISMISSED AS MOOT**.

Applicant requests the filing date on the basis that the application was deposited with the U. S. Postal Service (USPS) as Express Mail on May 6, 2009; however, the postcard receipt from the USPTO was stamped May 7, 2009. In support, petitioner provides a copy of the Express Mail label, No. EB 908955215 US, showing a "date-in" of May 6, 2009.

The USPTO considers the date the paper or fee is shown to have been deposited as "Express Mail" to be the "Date In" on the Express Mail label, MPEP 513. A review of the application file discloses that the application was, in fact, processed with the requested filing date of May 6, 2009, as can been seen by the Official Filing Receipt mailed May 27, 2009. It is noted that, while the transmittal letter found in the file refers to Express Mail label No. EB 9008955215 US, the accompanying papers refer to Express Mail label No. EB 908955215 US. A search of the USPS Track/Confirm record for Express Mail Label No. EB 908955215 US corroborates acceptance of the "Express Mail" package in question by the USPS on May 6, 2009.

Since the record clearly shows that the application is entitled to the filing date of **May 6, 2009**, the application is being referred to the Office of Patent Application Processing (OPAP) for further processing with the filing date of May 6, 2009.

Telephone inquires related to this decision should be directed to the undersigned at (571) 272-3204. Telephone inquiries related to OPAP processing should be directed to their hotline at (571) 272-4000.

Sherry D. Brinkley
Petitions Examiner
Office of Petitions

UNITED STATES PATENT AND TRADEMARK OFFICE

Commissioner for Patents
United States Patent and Trademark Office
P.O. Box 1450
Alexandria, VA 22313-1450
www.uspto.gov

ALEX RHODES
UNIT NO. 9
50168 PONTIAC TRAIL
WIXOM, MI 48393

MAILED

SEP 14 2009

OFFICE OF PETITIONS

In re Application of	:	
Fedchun et al.	:	DECISION ON PETITION
Application No. 12/387,893	:	TO WITHDRAW
Filed: May 11, 2009	:	FROM RECORD
Attorney Docket No. 1741-009	:	

This is a decision on the Request to Withdraw as attorney or agent of record under 37 C.F.R. § 1.36(b), filed August 10, 2009.

The request is **NOT APPROVED**.

A grantable request to withdraw as attorney/agent of record must be signed by every attorney/agent seeking to withdraw or contain a clear indication that one attorney is signing on behalf of another/others. The Office will require the practitioner(s) to certify that he, she or they have: (1) given reasonable notice to the client, prior to the expiration of the reply period, which the practitioner(s) intends to withdraw from employment; (2) delivered to the client or a duly authorized representative of the client all papers and property (including funds) to which the client is entitled; and (3) notified the client of any replies that may be due and the time frame within which the client must respond, pursuant to 37 CFR 10.40 (c).

The request cannot be approved since; all of the certifications were not made.

Accordingly, any subsequent requests must include all certifications pursuant to 37 CFR 10.40.

There are no outstanding Office actions that require a reply from the applicant.

All future communications from the Office will continue to be directed to the above-listed address until properly notified.

Telephone inquires concerning this decision should be directed to the undersigned at (571) 272-6059.

A. Kelley

Alicia Kelley
Petitions Examiner
Office of Petitions

UNITED STATES PATENT AND TRADEMARK OFFICE

Commissioner for Patents
United States Patent and Trademark Office
P.O. Box 1450
Alexandria, VA 22313-1450
www.uspto.gov

PATENT OFFICE OF DR. CHUNG S. PARK
P. O. BOX 62312
SUNNYVALE CA 94088-2312

MAILED

APR 09 2010

OFFICE OF PETITIONS

In re Application of
Hyeung-Yun Kim
Application No. 12/387,993
Filed: May 11, 2009
Attorney Docket No. ASM09-01US

DECISION ON PETITION
TO WITHDRAW
FROM RECORD

This is a decision on the Request to Withdraw as attorney or agent of record under 37 C.F.R. § 1.36(b), filed February 6, 2010.

The request is **NOT APPROVED**.

The Office will no longer accept address changes to a new practitioner of law firm filed with a Request, absent the filing of a power of attorney to the new representative. The Office will either change the correspondence address of record to the most current address information provided for the assignee of the entire interest who properly became of record under 37 CFR 3.71 or, the most current address information provided for the first named inventor.

Accordingly, the request to withdraw from record cannot be approved because the request does not include an acceptable current correspondence address for future communications from the Office.

Additionally, as set forth in MPEP 403(I), the addition or deletion of a practitioner from the list of persons associated with a Customer Number should be done by way of a *Request for Customer Number Data Change* (PTO/SB/124) and not a *Request for Withdrawal As Attorney or Agent and Change of Correspondence Address* (Form PTO/SB/83).

All future communications from the Office will continue to be directed to the above-listed address until otherwise notified by applicant.

Telephone inquiries concerning this decision should be directed to undersigned at 571-272-1642.

All other inquiries concerning the examination or status of this application should be directed to the Technology Center.

/AMW/
April M. Wise
Petitions Examiner
Office of Petitions

UNITED STATES PATENT AND TRADEMARK OFFICE

Commissioner for Patents
United States Patent and Trademark Office
P.O. Box 1450
Alexandria, VA 22313-1450
www.uspto.gov

PATENT OFFICE OF DR. CHUNG S. PARK
P. O. BOX 62312
SUNNYVALE, CA 94088-2312

MAILED

APR 09 2010

OFFICE OF PETITIONS

In re Application of	:	
Hyeung-Yun Kim	:	
Application No. 12/387,993	:	DECISION ON PETITION
Filed: May 11, 2009	:	TO WITHDRAW
Attorney Docket No. ASM09-01US	:	FROM RECORD

This is a decision on the renewed Request to Withdraw as attorney or agent of record under 37 C.F.R. § 1.36(b), filed March 17, 2010.

The request is **APPROVED**.

A grantable request to withdraw as attorney/agent of record must be signed by every attorney/agent seeking to withdraw or contain a clear indication that one attorney is signing on behalf of another/others.

The request was signed by Chung Park on behalf of all attorneys of record who are associated with customer No. 46513. All attorneys/agents associated with the Customer Number 46513 have been withdrawn. Applicant is reminded that there is no attorney of record at this time.

The correspondence address of record has been changed and the new correspondence address is the address indicated below.

There are no pending Office actions at the present time.

Telephone inquiries concerning this decision should be directed to undersigned at 571-272-1642. All other inquiries concerning the examination or status of this application should be directed to the Technology Center.

/AMW/
April M. Wise
Petitions Examiner
Office of Petitions

cc: HYEUNG-YUN KIM
3351 ALMA STREET #305
PALO ALTO, CA 94305

UNITED STATES PATENT AND TRADEMARK OFFICE

Commissioner for Patents
United States Patent and Trademark Office
P.O. Box 1450
Alexandria, VA 22313-1450
www.uspto.gov

COPY MAILED

JUN 08 2009

OFFICE OF PETITIONS

BIRCH STEWART KOLASCH & BIRCH
PO BOX 747
FALLS CHURCH, VA 22040-0747

In re Application of	:	
Bo Widen	:	
Application No. 12/388,043	:	DECISION ON PETITION
Filed: February 18, 2009	:	TO MAKE SPECIAL UNDER
Attorney Docket No. 0091-0260PUS1	:	37 CFR 1.102(c)(1)
	:	

This is a decision on the petition under 37 CFR 1.102(c)(1), filed May 8, 2009, to make the above-identified application special based on applicant's age as set forth in M.P.E.P. § 708.02, Section IV.

The petition is **GRANTED**.

A grantable petition to make an application special under 37 CFR 1.102(c)(1) and MPEP § 708.02, Section IV: Applicant's Age must be accompanied by evidence showing that at least one of the applicants is 65 years of age, or more, such as a birth certificate or a statement by applicant. No fee is required

The instant petition includes a copy of Inventor Bo Widen's passport showing that he is over 65 years of age. Accordingly, the above-identified application has been accorded "special" status.

Telephone inquiries concerning this decision should be directed to Irvin Dingle at 571-272-3210.

All other inquiries concerning either the examination or status of the application should be directed to the Technology Center.

The application is being forwarded to the Technology Center Art Unit 3673 for action on the merits commensurate with this decision.

Irvin Dingle
Petitions Examiner
Office of Petitions

UNITED STATES PATENT AND TRADEMARK OFFICE

Commissioner for Patents
United States Patent and Trademark Office
P.O. Box 1450
Alexandria, VA 22313-1450
www.uspto.gov

CASIMIR JONES SC
440 SCIENCE DRIVE
SUITE 203
MADISON WI 53711

MAILED

AUG 20 2009

OFFICE OF PETITIONS

In re Application of	:	
Chinnaiyan, et al.	:	
Application No. 12/388,058	:	ON PETITION
Filed: February 18, 2009	:	
Attorney Docket No. UM-30288/US-2/ORD	:	

This is a decision on the petition to withdraw the holding of abandonment under 37 CFR 1.181, filed July 16, 2009.

The petition under 37 CFR 1.181 is **GRANTED**.

The holding of abandonment is **WITHDRAWN**.

The application was held abandoned due to failure to timely file a reply to the Notice to File Missing Parts, mailed March 6, 2009. This Notice set an extendable period for reply of two (2) months to submit an oath or declaration, and the $65 surcharge for its late filing, replacement drawings, and a Sequence Listing. No reply having been received, the application became abandoned on May 7, 2009. The mailing of this decision precedes the mailing of a courtesy Notice of Abandonment.

To establish nonreceipt of an Office action, a petitioner must:
1) include a statement that the Office action was not received;
2) attest to the fact that a search of the file jacket and docket

records indicates that the Office action was not received; and 3) include a copy of the docket record where the nonreceived Office action would have been entered had it been received and docketed.[1] A proper docket report consists of a "docket record where the nonreceived Office action would have been entered had it been received and docketed."[2] "For example, if a three month period for reply was set in the nonreceived Office action, a copy of the docket record showing all replies docketed for a date three months from the mail date of the nonreceived Office action must be submitted..."[3]

With the instant petition, petitioner has submitted a copy of a master docket report, showing all of his replies docketed for the due date of May 6, 2009. An entry for the instant application is absent, supporting the conclusion that the March 6, 2009 Notice was not received.

In view thereof, the petition is granted.

The application is being forwarded to the Office of Application Processing for re-mailing of the March 6, 2009 Notice to File Missing Parts, setting a new period for reply.

Telephone inquiries related to this decision should be directed to the undersigned at (571)272-3207.

Cliff Congo
Petitions Attorney
Office of Petitions

---

[1] See MPEP 711.03(c)(II).

[2] MPEP 711.03(c)(II).

[3] Id.

UNITED STATES PATENT AND TRADEMARK OFFICE

Commissioner for Patents
United States Patent and Trademark Office
P.O. Box 1450
Alexandria, VA 22313-1450
www.uspto.gov

PEACOCK MYERS, P.C.
201 THIRD STREET, N.W.
SUITE 1340
ALBUQUERQUE NM 87102

MAILED

JUN 18 2010

OFFICE OF PETITIONS

In re Application of
George W. Brooks et al.
Application No. 12/388,149
Filed: February 18, 2009
Attorney Docket No. **31451-MC-2693-UT**

DECISION ON PETITION
TO MAKE SPECIAL UNDER
37 CFR 1.102(c)(1)

This is a decision on the petition under 37 CFR 1.102(c)(1), filed May 20, 2010, to make the above-identified application special based on applicant's age as set forth in MPEP § 708.02, Section IV.

The petition is **GRANTED**.

A grantable petition to make an application special under 37 CFR 1.102(c)(1) and MPEP § 708.02, Section IV: Applicant's Age must be accompanied by evidence showing that at least one of the applicants is 65 years of age, or more, such as a birth certificate or a statement by applicant. No fee is required

The instant petition includes a statement by the inventor. Accordingly, the above-identified application has been accorded "special" status.

Telephone inquiries concerning this decision should be directed to JoAnne Burke at 571-272-4584.

All other inquiries concerning either the examination or status of the application should be directed to the Technology Center.

The application is being forwarded to the Technology Center Art Unit 3641 for action on the merits commensurate with this decision.

/JoAnne Burke/
JoAnne Burke
Petitions Examiner
Office of Petitions

UNITED STATES PATENT AND TRADEMARK OFFICE

UNITED STATES DEPARTMENT OF COMMERCE
United States Patent and Trademark Office
Address: COMMISSIONER FOR PATENTS
P.O. Box 1450
Alexandria, Virginia 22313-1450
www.uspto.gov

APPLICATION NO.	FILING DATE	FIRST NAMED INVENTOR	ATTORNEY DOCKET NO.	CONFIRMATION NO.
12/388,161	02/18/2009	Tomohiro Hirayama	SUTOSH.312AUS	1972

7590 08/17/2009
KNOBBE MARTENS OLSON & BEAR LLP
2040 MAIN STREET
FOURTEENTH FLOOR
IRVINE, CA 92614

EXAMINER
MOHADDES, LADAN

ART UNIT	PAPER NUMBER
1795	

NOTIFICATION DATE	DELIVERY MODE
08/17/2009	ELECTRONIC

DECISION GRANTING PETITION UNDER 37 CFR 1.138(d)

The declaration of express abandonment is recognized

This is in response to the petition under 37 CFR 1.138(d), requesting for a refund of any previously paid search fee and excess claims fee in the above-identified application.

The petition is granted.

The express abandonment is recognized. Any previously paid search fee and excess claims fee are hereby refunded.

Telephone inquiries should be directed to the Office of Data Management at (571) 272-4200.

Betty Powell

Patent Publication Branch
Office of Data Management

Adjustment date: 08/14/2009 BPOWELL
02/19/2009 INTERSW 00001288 12388161
02 FC:1111 -540.00 OP

Adjustment date: 08/14/2009 BPOWELL
02/19/2009 INTERSW 00001288 12388161
02 FC:1111 -540.00 OP

FORM PET651G (Rev. 08/07)

UNITED STATES PATENT AND TRADEMARK OFFICE

MAILED

NOV 24 2009

DIRECTOR OFFICE
TECHNOLOGY CENTER 2400

Commissioner for Patents
United States Patent and Trademark Office
P.O. Box 1450
Alexandria, VA 22313-1450
www.uspto.gov

BIRCH STEWART KOLASCH & BIRCH
PO BOX 747
FALLS CHURCH VA 22040-0747

In re Application of: Jung Hoon Lee et al.
Application No. 12388243
Filed: February 18, 2009
For: METHOD FOR MAPPING PHYSICAL HYBRID AUTOMATIC REPEAT REQUEST INDICATOR CHANNEL

DECISION ON REQUEST TO PARTICIPATE IN PATENT PROSECUTION HIGHWAY PROGRAM AND PETITION TO MAKE SPECIAL UNDER 37 CFR 1.102(d)

This is a decision on the request to participate in the Patent Prosecution Highway (PPH) program and the petition under 37 CFR 1.102(d), filed November 10, 2009, to make the above-identified application special.

The petition is **GRANTED.**

A grantable request to participate in the PPH program and petition to make special require:

(1) The U.S. application must validly claim priority under 35 U.S.C. 119(a) to one or more applications filed in the KIPO;

(2) Applicant must submit a copy of the allowable/patentable claim(s) from the KIPO application(s) along with an English translation thereof and a statement that the English translation is accurate;

(3) All the claims in the U.S. application must sufficiently correspond or be amended to sufficiently correspond to the allowable/patentable claim(s) in the KIPO application(s);

(4) Examination of the U.S. application has not begun;

(5) Applicant must submit a copy of all the office actions from each of the KIPO application(s) containing the allowable/patentable claim(s) along with an English translation thereof and a statement that the English translation is accurate;

(6) Applicant must submit an IDS listing the documents cited by the KIPO examiner in the KIPO office action along with copies of documents except U.S. patents or U.S. patent application publications; and

(7) The required petition fee under 37 CFR 1.17(h).

The request to participate in the PPH program and petition are found to comply with the above requirements. Accordingly, the above-identified application has been accorded "special" status.

Telephone inquiries concerning this decision should be directed to Hassan Kizou at 571-272-3088

All other inquiries concerning the examination or status of the application is accessible in the PAIR system at http://www.uspto.gov/ebc/index.html.

The application is being forwarded to the examiner for action on the merits commensurate with this decision.

Hassan Kizou
Quality Assurance Specialist, Technology Center 2400

UNITED STATES PATENT AND TRADEMARK OFFICE

Commissioner for Patents
United States Patent and Trademark Office
P.O. Box 1450
Alexandria, VA 22313-1450
www.uspto.gov

HOFFMANN & BARON, LLP
6900 JERICHO TURNPIKE
SYOSSET NY 11791

COPY MAILED

MAR 30 2009

OFFICE OF PETITIONS

In re Application of	:	
Jackson LUM	:	
Application No. 12/388,244	:	DECISION ON PETITION
Filed: February 18, 2009	:	TO MAKE SPECIAL UNDER
Attorney Docket No. **812-33**	:	37 CFR 1.102(c)(1)
	:	

This is a decision on the petition under 37 CFR 1.102(c)(1), filed February 18, 2009, to make the above-identified application special based on applicant's age as set forth in M.P.E.P. § 708.02, Section IV.

The petition is **GRANTED**.

A grantable petition to make an application special under 37 CFR 1.102(c)(1) and MPEP § 708.02, Section IV: Applicant's Age must be accompanied by evidence showing that at least one of the applicants is 65 years of age, or more, such as a birth certificate or a statement by applicant. No fee is required

The instant petition includes a statement by Jackson Lum, attesting to his age. Accordingly, the above-identified application will be accorded "special" status.

Telephone inquiries concerning this decision should be directed to Tredelle Jackson at 571-272-2783.

All other inquiries concerning either the examination or status of the application should be directed to the Technology Center.

This application is being referred to the Office of Patent Application Processing. This application will be accorded "special" status when pre-examination processing is done.

Tredelle D. Jackson
Paralegal Specialist
Office of Petitions

UNITED STATES PATENT AND TRADEMARK OFFICE

Commissioner for Patents
United States Patent and Trademark Office
P.O. Box 1450
Alexandria, VA 22313-1450
www.uspto.gov

MAILED

APR 22 2010

OFFICE OF PETITIONS

DUNLAP CODDING, P.C.
PO BOX 16370
OKLAHOMA CITY, OK 73113

In re Application of	:	
Donald E. Weder	:	
Application No. 12/388,261	:	DECISION ON PETITION
Filed: February 18, 2009	:	UNDER 37 CFR 1.78(a)(3)
Attorney Docket No.: 8404.486		

This is a decision on the petition under 37 CFR 1.78(a)(3), filed November 12, 2009, to accept an unintentionally delayed claim under 35 U.S.C. § 120 for the benefit of priority to the prior-filed nonprovisional applications set forth in the amendment filed with the petition.

The petition is **GRANTED**.

A petition for acceptance of a claim for late priority under 37 CFR 1.78(a)(3) is only applicable to those applications filed on or after November 29, 2000. Further, the petition is appropriate only after the expiration of the period specified in 37 CFR 1.78(a)(2)(ii). In addition, the petition under 37 CFR 1.78(a)(3) must be accompanied by:

> **(1)** the reference required by 35 U.S.C. § 120 and 37 CFR 1.78(a)(2)(i) of the prior-filed application, unless previously submitted;
> **(2)** the surcharge set forth in § 1.17(t); and
> **(3)** a statement that the entire delay between the date the claim was due under 37 CFR 1.78(a)(2)(ii) and the date the claim was filed was unintentional. The Commissioner may require additional information where there is a question whether the delay was unintentional.

All of the above requirements having been satisfied, the late claim for priority under 35 U.S.C. § 120 is accepted as being unintentionally delayed.

The granting of the petition to accept the delayed benefit claim to the prior-filed applications under 37 CFR 1.78(a)(3) should not be construed as meaning that the instant application is entitled to the benefit of the prior-filed applications. In order for the instant application to be entitled to the benefit of the prior-filed applications, all other requirements under 35 U.S.C. §

120 and 37 CFR 1.78(a)(1) and (a)(2) must be met. Similarly, the fact that the corrected Filing Receipt accompanying this decision on petition includes the prior-filed applications should not be construed as meaning that applicant is entitled to the claim for benefit of priority to the prior-filed applications noted thereon. Accordingly, the examiner will, in due course, consider this benefit claim and determine whether the instant application is entitled to the benefit of the earlier filing date.

A corrected Filing Receipt, which includes the priority claim to the prior-filed nonprovisional applications, accompanies this decision on petition.

Any questions concerning this matter may be directed to the undersigned at (571) 272-3204.

This application is being forwarded to Technology Center Art Unit 3644 for consideration by the examiner of applicant's entitlement to claim benefit of priority under 35 U.S.C. § 120 to the prior-filed applications.

Sherry D. Brinkley
Petitions Examiner
Office of Petitions

Attachment: Corrected Filing Receipt

UNITED STATES PATENT AND TRADEMARK OFFICE

UNITED STATES DEPARTMENT OF COMMERCE
United States Patent and Trademark Office
Address: COMMISSIONER FOR PATENTS
P.O. Box 1450
Alexandria, Virginia 22313-1450
www.uspto.gov

APPLICATION NUMBER	FILING or 371(c) DATE	GRP ART UNIT	FIL FEE REC'D	ATTY.DOCKET.NO	TOT CLAIMS	IND CLAIMS
12/388,261	02/18/2009	3644	1090	8404.486	18	2

CONFIRMATION NO. 1144

CORRECTED FILING RECEIPT

30589
DUNLAP CODDING, P.C.
PO BOX 16370
OKLAHOMA CITY, OK 73113

OC000000041143512

Date Mailed: 04/15/2010

Receipt is acknowledged of this non-provisional patent application. The application will be taken up for examination in due course. Applicant will be notified as to the results of the examination. Any correspondence concerning the application must include the following identification information: the U.S. APPLICATION NUMBER, FILING DATE, NAME OF APPLICANT, and TITLE OF INVENTION. Fees transmitted by check or draft are subject to collection. Please verify the accuracy of the data presented on this receipt. **If an error is noted on this Filing Receipt, please submit a written request for a Filing Receipt Correction. Please provide a copy of this Filing Receipt with the changes noted thereon. If you received a "Notice to File Missing Parts" for this application, please submit any corrections to this Filing Receipt with your reply to the Notice. When the USPTO processes the reply to the Notice, the USPTO will generate another Filing Receipt incorporating the requested corrections**

Applicant(s)

Donald E. Weder, Highland, IL;

Power of Attorney:

Jerry Dunlap--17146
Glen Burdick--24230
Charles Codding--25099
Christopher Corbett--36109
Nicholas Rouse--36992
Marc Brockhaus--40923
Douglas Sorocco--43145

Domestic Priority data as claimed by applicant

This application is a CON of 11/980,138 10/30/2007 ABN
which is a CON of 11/359,150 02/21/2006 ABN
which is a CON of 10/440,706 05/19/2003 ABN
which is a CON of 10/279,812 10/23/2002 PAT 6,591,549
which is a DIV of 09/614,317 07/12/2000 ABN
which is a CIP of 09/468,579 12/21/1999 PAT 6,318,050
which is a CIP of 09/162,479 09/28/1998 PAT 6,047,524
which is a CON of 08/872,772 06/10/1997 PAT 5,813,194
which is a CON of 08/701,818 08/23/1996 PAT 5,735,103
which is a CON of 08/220,852 03/31/1994 PAT 5,572,851
This application 12/388,261
is a CIP of 12/288,233 10/17/2008
which is a CON of 11/928,998 10/30/2007 ABN
which is a CON of 11/203,483 08/12/2005 ABN
which is a CON of 10/676,475 10/01/2003 ABN
which is a CON of 10/303,373 11/22/2002 PAT 6,655,086

which is a CON of 10/190,278 07/03/2002 PAT 6,523,305
which is a CON of 10/004,991 12/04/2001 PAT 6,477,804
which is a CON of 09/747,227 12/22/2000 PAT 6,341,446
which is a CON of 09/080,771 05/18/1998 PAT 6,182,395
which is a CON of 08/606,957 02/26/1996 ABN

Foreign Applications

If Required, Foreign Filing License Granted: 03/04/2009

The country code and number of your priority application, to be used for filing abroad under the Paris Convention, is **US 12/388,261**

Projected Publication Date: Not Applicable

Non-Publication Request: No

Early Publication Request: No
Title

METHOD OF USING A CONICAL FLORAL SLEEVE

Preliminary Class

047

PROTECTING YOUR INVENTION OUTSIDE THE UNITED STATES

Since the rights granted by a U.S. patent extend only throughout the territory of the United States and have no effect in a foreign country, an inventor who wishes patent protection in another country must apply for a patent in a specific country or in regional patent offices. Applicants may wish to consider the filing of an international application under the Patent Cooperation Treaty (PCT). An international (PCT) application generally has the same effect as a regular national patent application in each PCT-member country. The PCT process **simplifies** the filing of patent applications on the same invention in member countries, but **does not result** in a grant of "an international patent" and does not eliminate the need of applicants to file additional documents and fees in countries where patent protection is desired.

Almost every country has its own patent law, and a person desiring a patent in a particular country must make an application for patent in that country in accordance with its particular laws. Since the laws of many countries differ in various respects from the patent law of the United States, applicants are advised to seek guidance from specific foreign countries to ensure that patent rights are not lost prematurely.

Applicants also are advised that in the case of inventions made in the United States, the Director of the USPTO must issue a license before applicants can apply for a patent in a foreign country. The filing of a U.S. patent application serves as a request for a foreign filing license. The application's filing receipt contains further information and guidance as to the status of applicant's license for foreign filing.

Applicants may wish to consult the USPTO booklet, "General Information Concerning Patents" (specifically, the section entitled "Treaties and Foreign Patents") for more information on timeframes and deadlines for filing foreign patent applications. The guide is available either by contacting the USPTO Contact Center at 800-786-9199, or it can be viewed on the USPTO website at http://www.uspto.gov/web/offices/pac/doc/general/index.html.

For information on preventing theft of your intellectual property (patents, trademarks and copyrights), you may wish to consult the U.S. Government website, http://www.stopfakes.gov. Part of a Department of Commerce initiative, this website includes self-help "toolkits" giving innovators guidance on how to protect intellectual property in specific countries such as China, Korea and Mexico. For questions regarding patent enforcement issues, applicants may call the U.S. Government hotline at 1-866-999-HALT (1-866-999-4158).

LICENSE FOR FOREIGN FILING UNDER

Title 35, United States Code, Section 184

Title 37, Code of Federal Regulations, 5.11 & 5.15

GRANTED

The applicant has been granted a license under 35 U.S.C. 184, if the phrase "IF REQUIRED, FOREIGN FILING LICENSE GRANTED" followed by a date appears on this form. Such licenses are issued in all applications where the conditions for issuance of a license have been met, regardless of whether or not a license may be required as set forth in 37 CFR 5.15. The scope and limitations of this license are set forth in 37 CFR 5.15(a) unless an earlier license has been issued under 37 CFR 5.15(b). The license is subject to revocation upon written notification. The date indicated is the effective date of the license, unless an earlier license of similar scope has been granted under 37 CFR 5.13 or 5.14.

This license is to be retained by the licensee and may be used at any time on or after the effective date thereof unless it is revoked. This license is automatically transferred to any related applications(s) filed under 37 CFR 1.53(d). This license is not retroactive.

The grant of a license does not in any way lessen the responsibility of a licensee for the security of the subject matter as imposed by any Government contract or the provisions of existing laws relating to espionage and the national security or the export of technical data. Licensees should apprise themselves of current regulations especially with respect to certain countries, of other agencies, particularly the Office of Defense Trade Controls, Department of State (with respect to Arms, Munitions and Implements of War (22 CFR 121-128)); the Bureau of Industry and Security, Department of Commerce (15 CFR parts 730-774); the Office of Foreign AssetsControl, Department of Treasury (31 CFR Parts 500+) and the Department of Energy.

NOT GRANTED

No license under 35 U.S.C. 184 has been granted at this time, if the phrase "IF REQUIRED, FOREIGN FILING LICENSE GRANTED" DOES NOT appear on this form. Applicant may still petition for a license under 37 CFR 5.12, if a license is desired before the expiration of 6 months from the filing date of the application. If 6 months has lapsed from the filing date of this application and the licensee has not received any indication of a secrecy order under 35 U.S.C. 181, the licensee may foreign file the application pursuant to 37 CFR 5.15(b).

UNITED STATES PATENT AND TRADEMARK OFFICE

Commissioner for Patents
United States Patent and Trademark Office
P.O. Box 1450
Alexandria, VA 22313-1450
www.uspto.gov

COPY MAILED

SEP 11 2009

OFFICE OF PETITIONS

BRACEWELL & GIULIANI LLP
P.O. BOX 61389
HOUSTON, TX 77208-1389

In re Application of	:	
Gordon Tibbitts	:	
Application No. 12/388,289	:	DECISION ON PETITION
Filed: February 18, 2009	:	TO WITHDRAW
Attorney Docket No. 066015.000021	:	FROM RECORD
	:	

This is a decision on the Request to Withdraw as attorney or agent of record under 37 C.F.R. § 1.36(b), filed July 27, 2009.

The request is **NOT APPROVED**.

A grantable request to withdraw as attorney/agent of record must be signed by every attorney/agent seeking to withdraw or contain a clear indication that one attorney is signing on behalf of another/others.

The request cannot be approved because practitioners were appointed by customer number. Petitioner must request withdrawal in the same manner by which they were appointed.

In order to request or take action in a patent matter, the assignee must establish its ownership of the patent to the satisfaction of the Director. In this regard, a Statement under 37 CFR 3.73(b) must have either: (i) documentary evidence of a chain of title from the original owner to the assignee (e.g., copy of an executed assignment), and a statement affirming that the documentary evidence of the chain of title from the original owner to the assignee was or concurrently is being submitted for recordation pursuant to § 3.11; or (ii) a statement specifying where documentary evidence of a chain of title from the original owner to the assignee is recorded in the assignment records of the Office (e.g., reel and frame number).

All future communications from the Office will continue to be directed to the above-listed address until otherwise notified by applicant.

Telephone inquiries concerning this decision should be directed to undersigned at 571-272-1642. All other inquiries concerning the examination or status of this application should be directed to the Technology Center.

/AMW/
April M. Wise
Petitions Examiner
Office of Petitions

cc: PARTICLE DRILLING TECHNOLOGIES, INC.
5611 BARID COURT
HOUSTON, TX 77041

UNITED STATES PATENT AND TRADEMARK OFFICE

UNITED STATES DEPARTMENT OF COMMERCE
United States Patent and Trademark Office
Address: COMMISSIONER FOR PATENTS
P.O. Box 1450
Alexandria, Virginia 22313-1450
www.uspto.gov

APPLICATION NO.	FILING DATE	FIRST NAMED INVENTOR	ATTORNEY DOCKET NO.	CONFIRMATION NO.
12/388,291	02/18/2009	Hidetomo MATSUO	SKTOSH.010AUS	1200

7590 04/02/2010
KNOBBE MARTENS OLSON & BEAR LLP
2040 MAIN STREET
FOURTEENTH FLOOR
IRVINE, CA 92614

EXAMINER
WU, XIAO MIN

ART UNIT	PAPER NUMBER
2628	

NOTIFICATION DATE	DELIVERY MODE
04/02/2010	ELECTRONIC

DECISION GRANTING PETITION UNDER 37 CFR 1.138(d)

The declaration of express abandonment is recognized

This is in response to the petition under 37 CFR 1.138(d), requesting for a refund of any previously paid search fee and excess claims fee in the above-identified application.

The petition is granted.

The express abandonment is recognized. Any previously paid search fee and excess claims fee are hereby refunded.

Telephone inquiries should be directed to the Office of Data Management at (571) 272-4200.

Patent Publication Branch
Office of Data Management

Refund Ref:
04/07/2010 0030002083

Excess Claims Refund Totals 540.00

Adjustment date: 04/07/2010 NFARMER
02/18/2009 INTERSU 00002629 12388291
02 FC:1111 -540.00 OP

FORM PET651G (Rev. 08/07)

UNITED STATES PATENT AND TRADEMARK OFFICE

Commissioner for Patents
United States Patent and Trademark Office
P.O. Box 1450
Alexandria, VA 22313-1450
www.uspto.gov
DIW Jan-10

PATTERSON & SHERIDAN, L.L.P.
3040 POST OAK BOULEVARD
SUITE 1500
HOUSTON TX 77056

COPY MAILED
JAN 21 2010

In re Application of	:	
Trassl et al.	:	
Application Number: 12/388342	:	ON PETITION
Filing Date: 02/18/2009	:	
Attorney Docket Number:	:	
ZIMR/0091US	:	
	:	

This is a decision on the petition under 37 CFR 1.182, filed on November 5, 2009, to correct the first name of the second named inventor.

The petition is **GRANTED**.

The second named inventor was identified as "Wolf Fritsche" in the declaration filed on March 20, 2009. Petitioners state that the second named inventor's first name is "Wolf-Eckart" and that the inventor's name was miscaptioned in the declaration.

The second inventor's name has been corrected to "Wolf-Eckart Fritcshe".

Office PALM records have been corrected to reflect the correct invention title. A corrected Filing Receipt is attached.

As the error was that of petitioner, rather than the Office, the petition fee is due and has been paid.

The application will be referred to Technology Center Art Unit 1795 for examination in due course.

Telephone inquiries concerning this matter may be directed to the undersigned at 571-272-3231.

D Wood

Douglas I. Wood
Senior Petitions Attorney
Office of Petitions

cc: Corrected Filing Receipt

UNITED STATES PATENT AND TRADEMARK OFFICE

UNITED STATES DEPARTMENT OF COMMERCE
United States Patent and Trademark Office
Address: COMMISSIONER FOR PATENTS
P.O. Box 1450
Alexandria, Virginia 22313-1450
www.uspto.gov

APPLICATION NUMBER	FILING or 371(c) DATE	GRP ART UNIT	FIL FEE REC'D	ATTY.DOCKET.NO	TOT CLAIMS	IND CLAIMS
12/388,342	02/18/2009	1795	1440	ZIMR/0091US	18	4

CONFIRMATION NO. 1297

CORRECTED FILING RECEIPT

26290
PATTERSON & SHERIDAN, L.L.P.
3040 POST OAK BOULEVARD
SUITE 1500
HOUSTON, TX 77056

OC000000039741234

Date Mailed: 01/21/2010

Receipt is acknowledged of this non-provisional patent application. The application will be taken up for examination in due course. Applicant will be notified as to the results of the examination. Any correspondence concerning the application must include the following identification information: the U.S. APPLICATION NUMBER, FILING DATE, NAME OF APPLICANT, and TITLE OF INVENTION. Fees transmitted by check or draft are subject to collection. Please verify the accuracy of the data presented on this receipt. **If an error is noted on this Filing Receipt, please submit a written request for a Filing Receipt Correction. Please provide a copy of this Filing Receipt with the changes noted thereon. If you received a "Notice to File Missing Parts" for this application, please submit any corrections to this Filing Receipt with your reply to the Notice. When the USPTO processes the reply to the Notice, the USPTO will generate another Filing Receipt incorporating the requested corrections**

Applicant(s)

Roland TRASSL, Giessen, GERMANY;
Wolf-Eckart FRITSCHE, Kahl, GERMANY;

Assignment For Published Patent Application

APPLIED MATERIALS, INC., Santa Clara, CA

Power of Attorney: The patent practitioners associated with Customer Number 26290

Domestic Priority data as claimed by applicant

This appln claims benefit of 61/032,139 02/28/2008

Foreign Applications

EUROPEAN PATENT OFFICE (EPO) 08152076.9 02/28/2008

Permission to Access - A proper **Authorization to Permit Access to Application by Participating Offices** (PTO/SB/39 or its equivalent) has been received by the USPTO.

Request to Retrieve - This application either claims priority to one or more applications filed in an intellectual property Office that participates in the Priority Document Exchange (PDX) program or contains a proper **Request to Retrieve Electronic Priority Application(s)** (PTO/SB/38 or its equivalent). Consequently, the USPTO will attempt to electronically retrieve these priority documents.

If Required, Foreign Filing License Granted: 02/27/2009

The country code and number of your priority application, to be used for filing abroad under the Paris Convention, is **US 12/388,342**

Projected Publication Date: Not Applicable

Non-Publication Request: No

Early Publication Request: No
Title

SPRAYED Si- OR Si:Al-TARGET WITH LOW IRON CONTENT

Preliminary Class

204

PROTECTING YOUR INVENTION OUTSIDE THE UNITED STATES

Since the rights granted by a U.S. patent extend only throughout the territory of the United States and have no effect in a foreign country, an inventor who wishes patent protection in another country must apply for a patent in a specific country or in regional patent offices. Applicants may wish to consider the filing of an international application under the Patent Cooperation Treaty (PCT). An international (PCT) application generally has the same effect as a regular national patent application in each PCT-member country. The PCT process **simplifies** the filing of patent applications on the same invention in member countries, but **does not result** in a grant of "an international patent" and does not eliminate the need of applicants to file additional documents and fees in countries where patent protection is desired.

Almost every country has its own patent law, and a person desiring a patent in a particular country must make an application for patent in that country in accordance with its particular laws. Since the laws of many countries differ in various respects from the patent law of the United States, applicants are advised to seek guidance from specific foreign countries to ensure that patent rights are not lost prematurely.

Applicants also are advised that in the case of inventions made in the United States, the Director of the USPTO must issue a license before applicants can apply for a patent in a foreign country. The filing of a U.S. patent application serves as a request for a foreign filing license. The application's filing receipt contains further information and guidance as to the status of applicant's license for foreign filing.

Applicants may wish to consult the USPTO booklet, "General Information Concerning Patents" (specifically, the section entitled "Treaties and Foreign Patents") for more information on timeframes and deadlines for filing foreign patent applications. The guide is available either by contacting the USPTO Contact Center at 800-786-9199, or it can be viewed on the USPTO website at http://www.uspto.gov/web/offices/pac/doc/general/index.html.

For information on preventing theft of your intellectual property (patents, trademarks and copyrights), you may wish to consult the U.S. Government website, http://www.stopfakes.gov. Part of a Department of Commerce initiative, this website includes self-help "toolkits" giving innovators guidance on how to protect intellectual property in specific countries such as China, Korea and Mexico. For questions regarding patent enforcement issues, applicants may call the U.S. Government hotline at 1-866-999-HALT (1-866-999-4158).

LICENSE FOR FOREIGN FILING UNDER

Title 35, United States Code, Section 184

Title 37, Code of Federal Regulations, 5.11 & 5.15

GRANTED

The applicant has been granted a license under 35 U.S.C. 184, if the phrase "IF REQUIRED, FOREIGN FILING LICENSE GRANTED" followed by a date appears on this form. Such licenses are issued in all applications where the conditions for issuance of a license have been met, regardless of whether or not a license may be required as set forth in 37 CFR 5.15. The scope and limitations of this license are set forth in 37 CFR 5.15(a) unless an earlier license has been issued under 37 CFR 5.15(b). The license is subject to revocation upon written notification. The date indicated is the effective date of the license, unless an earlier license of similar scope has been granted under 37 CFR 5.13 or 5.14.

This license is to be retained by the licensee and may be used at any time on or after the effective date thereof unless it is revoked. This license is automatically transferred to any related applications(s) filed under 37 CFR 1.53(d). This license is not retroactive.

The grant of a license does not in any way lessen the responsibility of a licensee for the security of the subject matter as imposed by any Government contract or the provisions of existing laws relating to espionage and the national security or the export of technical data. Licensees should apprise themselves of current regulations especially with respect to certain countries, of other agencies, particularly the Office of Defense Trade Controls, Department of State (with respect to Arms, Munitions and Implements of War (22 CFR 121-128)); the Bureau of Industry and Security, Department of Commerce (15 CFR parts 730-774); the Office of Foreign AssetsControl, Department of Treasury (31 CFR Parts 500+) and the Department of Energy.

NOT GRANTED

No license under 35 U.S.C. 184 has been granted at this time, if the phrase "IF REQUIRED, FOREIGN FILING LICENSE GRANTED" DOES NOT appear on this form. Applicant may still petition for a license under 37 CFR 5.12, if a license is desired before the expiration of 6 months from the filing date of the application. If 6 months has lapsed from the filing date of this application and the licensee has not received any indication of a secrecy order under 35 U.S.C. 181, the licensee may foreign file the application pursuant to 37 CFR 5.15(b).

UNITED STATES PATENT AND TRADEMARK OFFICE

Commissioner for Patents
United States Patent and Trademark Office
P.O. Box 1450
Alexandria, VA 22313-1450
www.uspto.gov

APR 0 6 2009

BAKER BOTTS LLP
C/O INTELLECTUAL PROPERTY DEPARTMENT
THE WARNER, SUITE 1300
1299 PENNSYLVANIA AVE, NW
WASHINGTON, DC 20004-2400

In re application of	:	**DECISION ON PETITION**
Alvaro Fernandez	:	**TO MAKE SPECIAL FOR**
Application No. 12/388,513	:	**NEW APPLICATION**
Filed: February 18, 2009	:	**UNDER 37 CFR 1.102**

For: METHODS OF ASSOCIATING A PURCHASE BY A CLIENT WITH A CONTENT PROVIDER WHICH FACILITATED THE PURCHASE BY THE CLIENT

This is a decision on the petition filed on February 18, 2009 to make the above-identified application special for accelerated examination procedure under 37 C.F.R. § 1.102(d).

The petition to make the application special is **DISMISSED**.

REGULATION AND PRACTICE

A grantable petition to make special under 37 C.F.R. § 1.102(d) and pursuant to the "Change to Practice for Petitions in Patent Applications to Make Special and for Accelerated Examination" published in the Federal Register on June 26, 2006 (71 Fed. Reg. 36323), must satisfy the following conditions:

I. Conditions Regarding the Application:

1. the application must be a non-reissue utility or design application filed under 37 CFR 1.111(a);

2. the application, the petition and the required fees must be filed electronically using the USPTO's electronic filing system (EFS), or EFS-web; if not filed electronically, a statement asserting that EFS and EFS-web were not available during the normal business hours.

3. at the time of filing, the application must be complete under 37 CFR 1.51 and in condition for examination;

4. the application must contain three or fewer independent claims and twenty or fewer total claims and the claims must be directed to a single invention.

II. Conditions Regarding the Petition:

The petition must:

1. be filed with the application;

2. include a statement that applicant agrees not to separately argue the patentability of any dependent claim during any appeal in the application;

3. include a statement that applicant agrees to make an election without traverse in a telephone interview.

4. include a statement that applicant agrees to conduct such an interview when requested by the examiner.

5. include a statement, made based on a good faith belief, that a preexamination search in compliance with the following requirements, was conducted, including an identification of the field of search by United States class and subclass, where applicable, and for database searches, the search logic or chemical structure or sequence used as a query, the name of the file(s) searched and the database service, and the date of the search.

The preexamination search must:

5.1 involve U.S. patents and patent application publications, foreign patent documents, and non-patent literature, unless the applicant can justify with reasonable certainty that no references more pertinent than those already identified are likely to be found in the eliminated sources and includes such a justification with this statement;

5.2. be directed to the claimed invention and encompass all of the features of the claims, giving the claims the broadest reasonable interpretation;

5.3. encompass the disclosed features that may be claimed.

6. must provide in support of the petition an accelerated examination support document.

An accelerated examination support document must include:

6.1. an information disclosure statement (IDS) in compliance with 37 CFR 1.98 citing each reference deemed most closely related to the subject matter of each of the claims;

6.2. an identification of all the limitations in the claims that are disclosed by the reference specifying where the limitation is disclosed in the cited reference;

6.3. a detailed explanation of how each of the claims is patentable over the references cited with particularity required by 37 CFR 1.111(b) and (c);

6.4. a concise statement of the utility of the invention as defined in each of the independent claims (unless the application is a design application);

6.5. a showing of where each limitation of the claims finds support under 35 USC 112, first paragraph, in the written description of the specification. If applicable, the showing must also identify: (1) each

means- (or step) plus-function claim element that invokes consideration under 35 USC 112, sixth paragraph; and (2) the structure, material, or acts in the specification that corresponds to each means- (or step) plus-function claim element that invokes consideration under 35 USC 112, sixth paragraph; if the application claims the benefit of one or more applications under title 35, United States Code, the showing must also include where each limitation of the claims finds support under 35 USC 112, first paragraph, in each such application in which such supports exists;

6.6. an identification of any cited references that may be disqualified under 35 USC 103(c).

REVIEW OF FACTS

The petition in this case fails to comply with conditions II.5, II.5.2, II.6.3 and II.6.6.

As per Condition II.5, the pre-examination search must indicate the date on which the search was conducted, and the date must be reasonably current and should not have too large of a time gap between when the search was conducted to when the petition was filed. With respect to all of the searches that were conducted by the applicant, the dates are too old and not reasonably current to ensure that recently published or issued prior art was considered. All of the searches were conducted during the timeframe of August 7th-11th of 2008. The instant petition was filed on February 18 of 2009. That is a gap of about almost 6 months, which is considered to be too large of a gap. The search date is not considered to be recent enough to comply with condition II.5.

As per condition II.5.2, the pre-examination search must be directed to the claimed invention and encompass all of the features of the claims, giving the claims the broadest reasonable interpretation.

With respect to the search by United States class and subclass that has been conducted by applicant, it did not include 705/14, which is where the instant application is classified. Class 705 subclass 14 deals with advertising types of subject matter, which is relevant to what is claimed due to the advertising aspect to the disclosed and claimed invention. It is suggested that 705/14 be searched.

With respect to the individual searches that were conducted by applicant, they are not found to be in compliance with condition II.5.2, which states that the pre-examination search must be directed to the claimed invention and encompass all of the features of the claims, giving the claims the broadest reasonable interpretation.

With respect to the EAST text search it is not clear what the default operator is for the search. EAST allows one to set a default operator so that the user does not have to place the terms "and", "or", etc. in their search query. In this case, it is not clear if applicant has used the "and" operator in the search or the "or" operator. The scope of the search cannot be ascertained without

knowing what the default operator was that was used in the search. For example, for the portion of a query such as "associa$4 affiliat$4 conjoin$4", is this searching for all of these terms together (use of "and"), or is this searching for these terms in the alternative (use of "or"), or is the operator other than "and" or "or"? This would affect how narrowly constructed or broadly constructed the search would be, which directly relates to condition II.5.2. With respect to the EAST search itself, it is noted that search string L1 is the only search string that has not been limited to various specific classes or subclasses. By limiting the searches to specific classes and subclasses, such as L4, that only includes classes 705, 707, 715 and 395; the search is too restrictive in scope. This is not in compliance with condition II.5.2. Also, search strings L6, L7, L15 and L36-L40 are all searches that have been limited to the Abstract, Title, or Brief Summary of a patent document. This is too restrictive of a search, and when taking into account that these searches are also limited to specific classes and subclasses, the overall search is considered to be constructed too narrowly. With respect to the focus of the search queries and the overall approach to the search, it does not appear to be directed to the scope of the claimed invention, and does not appear to be directed to the elements of the claims that have been argued by applicant as contributing to the patentability of the claims.

Claim 1 recites that a client selects a reference (this is not claimed but is disclosed as being an advertising link) by using a first type of Network, and also recites that the client purchases a good or service by using a second type of Network, which is different that the first type of Network. Applicant has also specifically argued this portion of claim 1 in the Examination Support Document and the detailed explanation of patentability. This feature does not appear to have been searched for in any of the EAST search strings. The search is not directed to the claimed invention and is not directed to the feature that applicant has argued for patentability. This is not in compliance with condition II.5.2.

With respect to claim 17, applicant argues that the limitation of the client purchasing the good or service from a physical location renders claim 17 patentable. The search strings do not appear to be directed to the purchase of a good or service from a physical location, like a brick and mortar store. It is suggested that applicant include terms in the search that correspond to the scope of claim 17 and what has been argued in claim 17 as rendering the claim as patentable. Terms such as "physical" in conjunction with "store, or location or warehouse", etc, and the use of "brick and mortar" (e.g. brick with mortar) are suggested for use. With respect to the use of synonyms and searching the broadest reasonable interpretation of the claims, applicant seems to have done a fairly good job of identifying good synonyms to the terms that were used. With respect to the feature of the "reference", this is a broad term and could be something such as a link, an icon, a hyperlink, etc., so for that element it is suggested that applicant consider the terms that are used in the suggested search that is found below. Also, with respect to the client choosing a reference, terms such as "click" or "designate" or "execute" should be considered for use in addition to those terms used by applicant.

As an example, to ensure that the search focuses on the main concept claimed, a recommended search might be executed in all databases of East with the following search query for claim 1:

L1: ((client or customer or buyer or consumer or patron or shopper or purchaser or user) same (select$3 or choos$3 or click$3 or pick$3 or designat$3 or execut$3) same (reference or link or hyperlink or URL or icon) same (network or (communication same medium))) and ((client or customer or buyer or consumer or patron or shopper or purchaser or user) same (purchas$3 or buy$3 or procur$5 or bought) same (type or kind or make or model) same (network or (communication with medium)) same (different))

Please keep in mind that these are non-limiting search suggestions and they are only meant to serve as a possible starting point for Applicant's preexamination search. Additional guidance regarding the proper manner of performing and documenting a preexamination search may be found on the following web site: http://www.uspto.gov/web/patents/accelerated/ Applicant is expected to perform more supplemental searches than the sample search queries listed above.

For the various NPL searches, the comments made with respect to the EAST search are also applicable to the NPL searches. Many of the NPL searches are very brief and are not focusing on the scope of the claims (broadest reasonable interpretation) and do not focus on the limitations that have been argued by applicant as rendering the claims patentable. It is suggested that applicant take into account the suggestions made for the EAST search and consider them for use in the NPL searches as well, so that the NPL searches will be commensurate in scope to the EAST search and will fully address what has been claimed and argued. If the various search terms and approaches to the search are deemed relevant for one database search (EAST), they are likely to be relevant to other database searches as well.

With respect to condition II.6.3, the examination support document is to include a detailed explanation of patentability of how *each claim* is patentable over the cited references. With respect to the dependent claims, in the detailed explanation of patentability set forth by applicant, it is stated that claims 1-17 are patentable "at least because" of particular argued features found in claims 1 and 17. With respect to the dependent claims, it is not clear if they are considered by applicant to be separately patentable beyond what is recited in the independent claims 1 and 17, or if they are considered to be patentable on their own. Applicant should either argue the dependent claims individually, or for those that are not considered to be patentable beyond the independent claims, make a statement for the record that they are not separately patentable. Also, it is noted that in the examination support document when discussing what limitations are

disclosed in the prior art, applicant has made statements that imply that certain dependent claims are not disclosed by the prior art and are not anticipated by the prior art. It appears that applicant may feel that some of the dependent claims are patentable for what they individually recite, but this is not clear because the dependent claims are not addressed in the detailed explanation for patentability portion of the document. Also, with respect to applicant establishing that each claim is patentable in both terms of anticipation and obviousness, applicant should address the obviousness of the dependent claims, such as claim 15 of Hansen. Claim 15 is apparently not anticipated by Hansen, but with respect to obviousness, this feature is taught by Issen and by Bezos. For claim 12 and with respect to Issen, the feature recited is not anticipated by Issen, but applicant states that this feature is disclosed in Hansen. For those dependent claims that are seen by applicant as patentable on their own and that are not viewed as being anticipated by a particular reference, if a given limitation is taught in another prior art reference, applicant should address the obviousness of that feature. Both anticipation and obviousness needs to be addressed for each claim, unless applicant states for the record that certain claims are not patentable beyond the independent claims.

With respect to condition II.6.6, the examination support document is supposed to identify any prior art that can be disqualified by 35USC 103(c). It is noted that there is no statement of record that says there is any art that can be disqualified or that says there is no prior art that can be disqualified. It is suggested that applicant clarify this issue for the record and to ensure compliance with condition II.6.6.

The petition fails to meet the required conditions to be accorded special status under the accelerated examination procedure.

DECISION

For the above stated reasons, the petition is **DISMISSED**. The application will therefore be taken up by the examiner for action in its regular turn.

Petitioner is given a single opportunity to perfect the petition. Any request for reconsideration of this decision must be submitted within one (1) month or thirty (30) days, whichever is longer, from the date of this decision. No extensions of time will be granted under 37 CFR 1.136(a) if the request is to be considered timely. Any request for reconsideration must address the deficiencies indicated above.

Petitioner is reminded that, upon granting of the special status of the application on request for reconsideration, the application will be processed expeditiously.

However, due to the dismissal of the instant petition, examination may not be completed within twelve months of the filing date of the application.

Any inquiry regarding this decision should be directed to Robert Weinhardt, Business Practice Specialist, at (571) 272-6633; Michelle Tarae, Business Practice Specialist, at 571-272-6727; or Dennis Ruhl, Primary Examiner, at 571-272-6808.

/C. Michelle Tarae/
C. Michelle Tarae
Business Practice Specialist
Technology Center 3600

MT/DR/03/30/09

UNITED STATES PATENT AND TRADEMARK OFFICE

Commissioner for Patents
United States Patent and Trademark Office
P.O. Box 1450
Alexandria, VA 22313-1450
www.uspto.gov

JUN 15 2009

BAKER BOTTS LLP
C/O INTELLECTUAL PROPERTY DEPARTMENT
THE WARNER, SUITE 1300
1299 PENNSYLVANIA AVE, NW
WASHINGTON DC 20004-2400

In re application of :	:	**DECISION ON PETITION**
Alvaro Fernandez	:	**TO MAKE SPECIAL FOR**
Application No.: 12/388,513	:	**NEW APPLICATION**
Filed: February 18, 2009	:	**UNDER 37 CFR 1.102**

For: METHODS OF ASSOCIATING A PURCHASE BY A CLIENT WITH A CONTENT PROVIDER WHICH FACILITATED THE PURCHASE BY THE CLIENT

This is a decision on the petition filed on February 18, 2009 and the supplemental petition documents filed May 7, 2009 to make the above-identified application special for accelerated examination procedure under 37 C.F.R. § 1.102(d).

The petition to make the application special is **GRANTED**.

The application is eligible for accelerated examination and the petition complies with the conditions for granting the application special status pursuant to the "Change to Practice for Petitions in Patent Applications to Make Special and for Accelerated Examination" published June 26, 2006, in the Federal Register. (71 Fed. Reg. 36323).

The prosecution of the instant application will be conducted expeditiously according to the following guidelines.

1. The application will be docketed to an examiner and taken up for action within two weeks of the date of this decision.

2. Restriction Practice:
   If the examiner determines that the claims are not directed to a single invention, a telephone request to elect one single invention will be made pursuant to MPEP 812.01. As a prerequisite to the grant of this petition, the applicant has agreed to make an oral election, by telephone, without traverse. If the applicant refuses to make an election without traverse, or

the examiner cannot reach the applicant after a reasonable effort, the examiner will treat the first claimed invention (invention defined by claim 1) as having being constructively elected without traverse for examination.

3. Office action:
   If it is determined that, after appropriate consultation, there is a potential rejection or any other issue to be addressed, the examiner will telephone the applicant and arrange an interview to discuss and resolve the issue. An Office action, other than a Notice of Allowance and Fee(s) Due (Notice of Allowance), will not be issued unless either: 1) an interview was conducted but did not result in agreed to action that places the application in condition for allowance, or, 2) a determination is made that an interview would be unlikely to result in the application being placed in condition for allowance, and 3) an internal conference has been held to review any rejection of any claim.

4. Time for Reply:
   An Office action other than a Notice of Allowance or a final Office action will set a shortened statutory period of one month or thirty days, whichever is longer, for reply with no extension of time available under 37 CFR 1.136(a). Failure to timely file a reply within this non-extendible period for reply will result in the abandonment of the application.

5. Reply by Applicant:
   A timely reply to an Office action other than the Notice of Allowance must be submitted electronically via EFS or EFS-web and limited to addressing the rejections, objections and requirement made. Any amendment that attempts to: 1) add claims which would result in more than three pending independent claims or more than twenty pending total claims; 2) present claims not encompassed by the pre-examination search or an updated accelerated examination support document; or 3) present claims that are directed to a non-elected invention or an invention other than that previously claimed and examined in the application, will be treated as not fully responsive and will not be entered.

   For any amendment to the claims (including any new claim) that is not encompassed by the accelerated examination support document, applicant must provide an updated accelerated examination support document that encompasses the amended or new claims at the time of filing of the amendment.

   To proceed expeditiously with the examination, it is recommended that a reply with amendments made to any claim or with any new claim being added be accompanied by an updated accelerated examination support document or a statement explaining how the amended or new claim is supported by the original accelerated examination support document.

6. Information Disclosure Statement (IDS):
   Any IDS filed during prosecution must be submitted electronically via EFS or EFS-web, accompanied by an updated accelerated examination support document, and be in compliance with 37 CFR 1.97 and 1.98.

7. Post-Allowance Processing:
   To expedite processing of the allowed application into a patent, the applicant must: 1) pay the required fees within one month of the date of the Notice of Allowance, and 2) not file any post allowance papers not required by the Office. In no event may the issue fee be paid and accepted later than three months from the date of the Notice of Allowance.

8. After-Final and Appeal Procedures:
   To expedite prosecution, after receiving the final Office action, applicant must: 1) promptly file a notice of appeal, an appeal brief and appeal fees; and 2) not request a pre-appeal brief conference.

   Any amendment, affidavit or other evidence filed after final Office action must comply with applicable rules and the requirements outlined in numbered paragraphs 5 and 6 above.

   On appeal, the application will proceed according to normal appeal procedures. After appeal, the application will again be treated special.

9. Proceedings Outside the Normal Examination Process:
   If the application becomes involved in a proceeding that is outside the normal examination process (e.g., a secrecy order, national security review, interference proceeding, petitions under 37 CFR 1.181, 182 or 183), the application will be treated special before and after such proceeding.

10. Final Disposition:
    The twelve month goal of this accelerated examination procedure ends with a final disposition. The mailing of a final Office action, a Notice of Allowance, the filing of a Notice of Appeal, or the filing of a Request for Continued Examination (RCE) is the final disposition.

    If, during prosecution, a paper is not filed electronically using EFS-web, a reply is filed but is not fully responsive, the application is involved in an appeal, or a proceeding outside normal examination process, the application will still be examined expeditiously, however, the final disposition may occur more than twelve months from the filing of the application.

Any inquiry regarding this decision should be directed to Robert Weinhardt, Business Practice Specialist, at (571) 272-6633.

Robert A. Weinhardt,
Business Practice Specialist
Technology Center 3600

RW/6/12/09

UNITED STATES PATENT AND TRADEMARK OFFICE

UNITED STATES DEPARTMENT OF COMMERCE
United States Patent and Trademark Office
Address: COMMISSIONER FOR PATENTS
P.O. Box 1450
Alexandria, Virginia 22313-1450
www.uspto.gov

APPLICATION NO.	FILING DATE	FIRST NAMED INVENTOR	ATTORNEY DOCKET NO.	CONFIRMATION NO.
12/388,751	02/19/2009	Masahiko Iijima	TMCT-10202/08	2037

25006 7590 07/22/2010
GIFFORD, KRASS, SPRINKLE,ANDERSON & CITKOWSKI, P.C
PO BOX 7021
TROY, MI 48007-7021

EXAMINER
MAPLES, JOHN S

ART UNIT	PAPER NUMBER
1795	

MAIL DATE	DELIVERY MODE
07/22/2010	PAPER

Please find below and/or attached an Office communication concerning this application or proceeding.

The time period for reply, if any, is set in the attached communication.

UNITED STATES PATENT AND TRADEMARK OFFICE

Commissioner for Patents
United States Patent and Trademark Office
P.O. Box 1450
Alexandria, VA 22313-1450
www.uspto.gov

July 22, 2010 BC

In re application of Masahiko Iijima et al. Serial No. 12/388751 Filed: February 19, 2009 For: PROTON CONDUCTOR, AND FUEL CELL AND FUEL CELL SYSTEM INCLUDING PROTON CONDUCTOR	: : : : : : :	DECISION ON REQUEST TO PARTICIPATE IN PATENT PROSECUTION HIGHWAY PROGRAM AND PETITION TO MAKE SPECIAL UNDER 37 CFR 1.102(d)

This is a decision on the request to participate in the Patent Prosecution Highway (PPH) program filed June 29, 2010.

The request and petition are **GRANTED**.

A grantable request to participate in the PPH program and petition to make special require:

(1) The U.S. application must validly claim priority under 35 U.S.C. 119(a) to one or more applications filed in the JPO, note where the JPO application with similar claims is not the same application from which the U.S. application claims priority that the applicant must identify the relationship between the JPO application with similar claims and the JPO priority application;

(2) Applicant must submit a copy of:
   a. The allowable/patentable claim(s) from the JPO application(s) or if a copy of the allowable/patentable claims is available via the Dossier Access System (DAS) applicant may request the USPTO to obtain a copy from DAS; however, if the USPTO is unable to obtain a copy from the DAS, the applicant will be required to submit a copy;
   b. An English translation of the allowable/ patentable claim(s), if applicable; and
   c. A statement that the English translation is accurate, if applicable;

(3) Applicant must:
   a. Ensure all the independent claims in the U.S. application must sufficiently correspond or be amended to sufficiently correspond to the allowable/patentable claim(s) in the JPO application(s); and
   b. Submit a claims correspondence table in English;

(4) Examination of the U.S. application has not begun;

(5) Applicant must submit:

a. Documentation of prior office action:
   i. a copy of the office action(s) just prior to the "Decision to Grant a Patent" from each of the JPO application(s) containing the allowable/patentable claims(s) or
   ii. if the allowable/patentable claim(s) are from "Notification of Reasons for Refusal" then the Notification of Reasons for Refusal or
   iii. if the JPO application is a first action allowance then no office action from the JPO is necessary should be indicated on the request/petition form;
   Further, if a copy of the documents from a or b is available via the Dossier Access System (DAS), applicant may request the USPO obtain a copy from the DAS; however, if the USPTO is unable to obtain a copy of the DAS, the applicant will be required to submit a copy;
b. An English language translation of the JPO Office action from (5)(a)(i)-(ii) above if applicable; and

(6) Applicant must submit:
a. An IDS listing the documents cited by the JPO examiner in the JPO office action (unless already submitted in this application)
b. Copies of documents except U.S. patents or U.S. patent application publications (unless already submitted in this application); and

The request to participate in the PPH program and petition comply with the above requirements. Accordingly, the above-identified application has been accorded "special" status.

The application is being forwarded to the examiner for action on the merits commensurate with this decision.

Any inquiry regarding this decision should be directed to Blaine Copenheaver, Quality Assurance Specialist, at (571) 272-1156.

All other inquiries concerning the examination or status of the application is accessible in the PAIR system at http://www.uspto.gov/ebc/index.html.

/Blaine Copenheaver/

Blaine Copenheaver
Quality Assurance Specialist
Technology Center 1700

UNITED STATES PATENT AND TRADEMARK OFFICE

Commissioner for Patents
United States Patent and Trademark Office
P.O. Box 1450
Alexandria, VA 22313-1450
www.uspto.gov

FOLEY AND LARDNER LLP
Suite 500
3000 K Street NW
Washington, DC 20007

MAILED

JAN 11 2010

OFFICE OF PETITIONS

In re Application of	:	
Gerd Geisslinger, et al.	:	
Application No. 12/388,875	:	DECISION ON PETITION
Filed: February 19, 2009	:	TO WITHDRAW
Attorney Docket No. 016915-0348	:	FROM RECORD
	:	

This is a decision on the Request to Withdraw as attorney or agent of record under 37 C.F.R. § 1.36(b), filed November 3, 2009.

The request is **APPROVED**.

A grantable request to withdraw as attorney/agent of record must be signed by every attorney/agent seeking to withdraw or contain a clear indication that one attorney is signing on behalf of another/others. A request to withdraw will not be approved unless at least 30 (thirty) days would remain between the date of approval and the later of the expiration date of a time to file a response or the expiration date of the maximum time period which can be extended under 37 C.F.R. § 1.136(a).

The request was signed by Rouget F. Henschel on behalf of all attorneys of record. All attorneys/agents have been withdrawn. Applicant is reminded that there is no attorney of record at this time.

All future correspondence will be directed to the first named inventor Gerd Geisslinger at the address indicated below.

Telephone inquiries concerning this decision should be directed to Terri Johnson at 571-272-2991.

Terri Johnson
Petitions Examiner
Office of Petitions

cc: **Gerd Geisslinger**
Drei Linden Strasse 31
Bad Soden, 65812
Germany

UNITED STATES PATENT AND TRADEMARK OFFICE

UNITED STATES DEPARTMENT OF COMMERCE
United States Patent and Trademark Office
Address: COMMISSIONER FOR PATENTS
P.O. Box 1450
Alexandria, Virginia 22313-1450
www.uspto.gov

APPLICATION NUMBER	FILING OR 371(C) DATE	FIRST NAMED APPLICANT	ATTY. DOCKET NO./TITLE
12/388,875	02/19/2009	Gerd GEISSLINGER	016915-0348

CONFIRMATION NO. 2255

POWER OF ATTORNEY NOTICE

22428
FOLEY AND LARDNER LLP
SUITE 500
3000 K STREET NW
WASHINGTON, DC 20007

OC000000039580551

Date Mailed: 01/11/2010

NOTICE REGARDING CHANGE OF POWER OF ATTORNEY

This is in response to the Power of Attorney filed 11/03/2009.

- The withdrawal as attorney in this application has been accepted. Future correspondence will be mailed to the new address of record. 37 CFR 1.33.

/tsjohnson/

Office of Data Management, Application Assistance Unit (571) 272-4000, or (571) 272-4200, or 1-888-786-0101

UNITED STATES PATENT AND TRADEMARK OFFICE

Commissioner for Patents
United States Patent and Trademark Office
P.O. Box 1450
Alexandria, VA 22313-1450
www.uspto.gov

DICKINSON WRIGHT PLLC
38525 WOODWARD AVENUE
SUITE 2000
BLOOMFIELD HILLS, MI 48304-2970

MAILED

APR 12 2010

OFFICE OF PETITIONS

In re Application of	:	
Benny Sum	:	DECISION ON PETITION
Application No. 12/388,905	:	TO WITHDRAW
Filed: February 19, 2009	:	FROM RECORD
Attorney Docket No. 37671-20	:	

This is a decision on the Request to Withdraw as attorney or agent of record under 37 C.F.R. § 1.36(b), filed January 14, 2010.

The request is **NOT APPROVED** because it is moot.

A review of the file record indicates that Dickinson Wright PLLC was revoked as power of attorney by the assignee of the patent application on February 17, 2010. Accordingly, the request to withdraw under 37 C.F.R. § 1.36(b) is moot.

All future communications from the Office will continue to be directed to the below-listed address until otherwise notified by applicant.

Telephone inquires concerning this decision should be directed to the undersigned at 571-272-6059.

A. Kelley

Alicia Kelley
Petitions Examiner
Office of Petitions

cc: TETHYS BIOSCIENCE, INC.
1900 UNIVERSITY AVENUE
SUITE 200
EAST PALO ALTO, CA 94303

UNITED STATES PATENT AND TRADEMARK OFFICE

UNITED STATES DEPARTMENT OF COMMERCE
United States Patent and Trademark Office
Address: COMMISSIONER FOR PATENTS
P.O. Box 1450
Alexandria, Virginia 22313-1450
www.uspto.gov

APPLICATION NUMBER	FILING OR 371(C) DATE	FIRST NAMED APPLICANT	ATTY. DOCKET NO./TITLE
12/388,905	02/19/2009	Benny Sum	37671-20

CONFIRMATION NO. 2305

POWER OF ATTORNEY NOTICE

59582
DICKINSON WRIGHT PLLC
38525 WOODWARD AVENUE
SUITE 2000
BLOOMFIELD HILLS, MI 48304-2970

OC000000040984013

Date Mailed: 04/06/2010

NOTICE REGARDING CHANGE OF POWER OF ATTORNEY

This is in response to the Power of Attorney filed 02/17/2010.

- The Power of Attorney to you in this application has been revoked by the assignee who has intervened as provided by 37 CFR 3.71. Future correspondence will be mailed to the new address of record(37 CFR 1.33).

/atkelley/

Office of Data Management, Application Assistance Unit (571) 272-4000, or (571) 272-4200, or 1-888-786-0101

UNITED STATES PATENT AND TRADEMARK OFFICE

UNITED STATES DEPARTMENT OF COMMERCE
United States Patent and Trademark Office
Address: COMMISSIONER FOR PATENTS
P.O. Box 1450
Alexandria, Virginia 22313-1450
www.uspto.gov

APPLICATION NO.	FILING DATE	FIRST NAMED INVENTOR	ATTORNEY DOCKET NO.	CONFIRMATION NO.
12/388,939	02/19/2009	Arturo A. Rodriguez	60374.0004US22	2365

EXAMINER

7590 12/29/2009
MERCHANT & GOULD
SCIENTIFIC ATLANTA, A CISCO COMPANY
P.O. BOX 2903
MINNEAPOLIS, MN 55402-0903

ART UNIT	PAPER NUMBER
2176	

MAIL DATE	DELIVERY MODE
12/29/2009	PAPER

DECISION GRANTING PETITION UNDER 37 CFR 1.138(d)

The declaration of express abandonment is recognized

This is in response to the petition under 37 CFR 1.138(d), requesting for a refund of any previously paid search fee and excess claims fee in the above-identified application.

The petition is granted.

The express abandonment is recognized. Any previously paid search fee and excess claims fee are hereby refunded.

Telephone inquiries should be directed to the Office of Data Management at (571) 272-4200.

Mimi Farmer

Patent Publication Branch
Office of Data Management

Adjustment date: 12/29/2009 MFARMER
03/02/2009 VVAN11 00000325 190761 12388939
02 FC:1111 540.00 CR

FORM PET651G (Rev. 08/07)

UNITED STATES PATENT AND TRADEMARK OFFICE

Commissioner for Patents
United States Patent and Trademark Office
P.O. Box 1450
Alexandria, VA 22313-1450
www.uspto.gov

JUN 30 2010

Kenyon & Kenyon LLP
1500 K Street N. W.
Suite 700
Washington, DC 20005

In re application of	:	**DECISION ON REQUEST TO**
Toshiya Hashimoto	:	**PARTICIPATE IN PATENT**
Application No. 12/388999	:	**PROSECUTION HIGHWAY**
Filed: February 19, 2009	:	**PROGRAM AND PETITION**
For: HYBRID VEHICLE AND CONTROL	:	**TO MAKE SPECIAL UNDER**
METHOD OF HYBRID VEHICLE	:	**37 CFR 1.102(d)**

This is a decision on the request to participate in the Patent Prosecution Highway (PPH) program and the petition under 37 CFR 1.102(d), filed April 29, 2010, to make the above-identified application special.

The request and petition are **DISMISED**.

A grantable request to participate in the PPH pilot program and petition to make special require:

(1) The U.S. application must validly claim priority under 35 U.S.C. 119(a) or 35 U.S.C. 120 to one or more applications filed in the JPO;
(2) Applicant must submit a copy of the allowable/patentable claim(s) from the JPO application(s) along with an English translation thereof and a statement that the English translation is accurate;
(3) All the claims in the U.S. application must sufficiently correspond or be amended to sufficiently correspond to the allowable/patentable claim(s) in the JPO application(s);
(4) Examination of the U.S. application has not begun;
(5) Applicant must submit a copy of the latest Office action from each of the JPO application(s) containing the allowable/patentable claim(s) along with an English translation thereof and a statement that the English translation is accurate;
(6) Applicant must submit an IDS listing the documents cited by the JPO examiner in the JPO Office action along with copies of documents except U.S. patents or U.S. patent application publications; and
(7) The required petition fee under 37 CFR 1.17(h).

The request to participate in the PPH pilot program and petition fail to include:
(3) Claims of the U.S. Application that sufficiently corresponds to the allowable claims of the JPP application. Specifically, in claims 9 and 10, "the vehicle speed" does not correspond with being "the detected vehicle speed", resulting in a change in scope from that of the allowed Japanese claims. Also, because claims 9 and 10 have no equivalent claims in the Japanese patent, they likewise do not correspond to any of the Japanese patent claims.

Applicant is given a time period of **ONE MONTH or THIRTY DAYS**, whichever is longer, to correct the deficiencies. **NO EXTENSION OF TIME UNDER 37 CFR 1.136 IS PERMITTED.** If the deficiencies are not corrected with the time period given, the application will await action in its regular turn. All replies to a decision to dismiss must be submitted by EFS-Web using the document description "Petition to make special under Patent Prosecution Highway."

Any inquiry regarding this decision should be directed to Mikado Buiz, Quality Assurance Specialist, at (571) 272-6578.

/ Mikado Buiz /

Mikado Buiz,
Quality Assurance Specialist
Technology Center 3600

MB/MB: 6/29/10

UNITED STATES PATENT AND TRADEMARK OFFICE

UNITED STATES DEPARTMENT OF COMMERCE
United States Patent and Trademark Office
Address: COMMISSIONER FOR PATENTS
P.O. Box 1450
Alexandria, Virginia 22313-1450
www.uspto.gov

APPLICATION NO.	FILING DATE	FIRST NAMED INVENTOR	ATTORNEY DOCKET NO.	CONFIRMATION NO.
12/389,045	02/19/2009	Arturo A. Rodriguez	60374.0004US23	2534

EXAMINER

7590 12/29/2009
MERCHANT & GOULD
SCIENTIFIC ATLANTA, A CISCO COMPANY
P.O. BOX 2903
MINNEAPOLIS, MN 55402-0903

ART UNIT	PAPER NUMBER
2176	

MAIL DATE	DELIVERY MODE
12/29/2009	PAPER

DECISION GRANTING PETITION UNDER 37 CFR 1.138(d)

The declaration of express abandonment is recognized

This is in response to the petition under 37 CFR 1.138(d), requesting for a refund of any previously paid search fee and excess claims fee in the above-identified application.

The petition is granted.

The express abandonment is recognized. Any previously paid search fee and excess claims fee are hereby refunded.

Telephone inquiries should be directed to the Office of Data Management at (571) 272-4200.

Tomi Farmer

Patent Publication Branch
Office of Data Management

Adjustment date: 12/29/2009 NFARMER
03/02/2009 WANN11 00000035 198761 12389045
02 FC:1111 540.00 CR

FORM PET651G (Rev. 08/07)

UNITED STATES PATENT AND TRADEMARK OFFICE

Commissioner for Patents
United States Patent and Trademark Office
P.O. Box 1450
Alexandria, VA 22313-1450
www.uspto.gov

FEB 2 2 2010

Pearne & Gordon, LLP
1801 East 9th Street
Suite 1200
Cleveland, OH 44114-3108

In re application of Ronald Leslie Mann Application No. 12/389,067 Filed: May 9, 2007 For: WAVEFORM PANEL	**DECISION ON REQUEST TO PARTICIPATE IN PATENT PROSECUTION HIGHWAY PROGRAM AND PETITION TO MAKE SPECIAL UNDER 37 CFR 1.102(d)**

This is a decision on the request to participate in the Patent Prosecution Highway (PPH) program and the petition under 37 CFR 1.102(d), filed December 23, 2009, to make the above-identified application special.

The request and petition are **DISMISSED**.

A grantable request to participate in the PPH pilot program and petition to make special require:

(1) The U.S. application must validly claim priority under 35 U.S.C. 119(a) to one or more applications filed in the IPAU;
(2) Applicant must submit a copy of the allowable/patentable claim(s) from the IPAU application(s) along with an English translation thereof and a statement that the English translation is accurate;
(3) All the claims in the U.S. application must sufficiently correspond or be amended to sufficiently correspond to the allowable/patentable claim(s) in the IPAU application(s);
(4) Examination of the U.S. application has not begun;
(5) Applicant must submit a copy of the latest Office action from each of the IPAU application(s) containing the allowable/patentable claim(s) along with an English translation thereof and a statement that the English translation is accurate;
(6) Applicant must submit an IDS listing the documents cited by the IPAU examiner in the IPAU Office action along with copies of documents except U.S. patents or U.S. patent application publications; and
(7) The required petition fee under 37 CFR 1.17(h).

The request to participate in the PPH pilot program and petition fail to include:
(3) Claims of the U.S. Application that sufficiently correspond to the allowable claims of the IPAU application. Specifically, it looks like claim 5 is made dependent upon claim 1 where claim 5 of the allowed IPAU application is dependent upon claims 2 or 3. Correction is required.

Applicant is given a time period of **ONE MONTH or THIRTY DAYS**, whichever is longer, to correct the deficiencies. **NO EXTENSION OF TIME UNDER 37 CFR 1.136 IS PERMITTED.** If the deficiencies are not corrected with the time period given, the application will await action in its regular turn. All replies to a decision to dismiss must be submitted by EFS-Web using the document description "Petition to make special under Patent Prosecution Highway."

Any inquiry regarding this decision should be directed to Steven N. Meyers, Quality Assurance Specialist, at (571) 272-6611.

Steven N. Meyers,
Quality Assurance Specialist
Technology Center 3600

Sm/sm: 2/21/10

UNITED STATES PATENT AND TRADEMARK OFFICE

UNITED STATES DEPARTMENT OF COMMERCE
United States Patent and Trademark Office
Address: COMMISSIONER FOR PATENTS
P.O. Box 1450
Alexandria, Virginia 22313-1450
www.uspto.gov

APPLICATION NO.	FILING DATE	FIRST NAMED INVENTOR	ATTORNEY DOCKET NO.	CONFIRMATION NO.
12/389,067	02/19/2009	Ronald Leslie Mann	ADAM-44902	2573

86378 7590 03/11/2010
Pearne & Gordon LLP
1801 East 9th Street
Suite 1200
Cleveland, OH 44114-3108

EXAMINER
GARCIA, ERNESTO

ART UNIT	PAPER NUMBER
3679	

NOTIFICATION DATE	DELIVERY MODE
03/11/2010	ELECTRONIC

Please find below and/or attached an Office communication concerning this application or proceeding.

The time period for reply, if any, is set in the attached communication.

Notice of the Office communication was sent electronically on above-indicated "Notification Date" to the following e-mail address(es):

patdocket@pearne.com
dchervenak@pearne.com

UNITED STATES PATENT AND TRADEMARK OFFICE

Commissioner for Patents
United States Patent and Trademark Office
P.O. Box 1450
Alexandria, VA 22313-1450
www.uspto.gov

MAR 10 2010

Pearne & Gordon, LLP
1801 East 9th Street
Suite 1200
Cleveland, OH 44114-3108

In re application of Ronald Leslie Mann Application No. 12/389,067 Filed: May 9, 2007 For: WAVEFORM PANEL	**DECISION ON REQUEST TO PARTICIPATE IN PATENT PROSECUTION HIGHWAY PROGRAM AND PETITION TO MAKE SPECIAL UNDER 37 CFR 1.102(d)**

This is a decision on the renewed request to participate in the Patent Prosecution Highway (PPH) program and the petition under 37 CFR 1.102(d), filed March 8, 2010, to make the above-identified application special.

The request and petition are **GRANTED**.

A grantable request to participate in the PPH pilot program and petition to make special require:

(1) The U.S. application must validly claim priority under 35 U.S.C. 119(a) to one or more applications filed in the IPAU;
(2) Applicant must submit a copy of the allowable/patentable claim(s) from the IPAU application(s) along with an English translation thereof and a statement that the English translation is accurate;
(3) All the claims in the U.S. application must sufficiently correspond or be amended to sufficiently correspond to the allowable/patentable claim(s) in the IPAU application(s);
(4) Examination of the U.S. application has not begun;
(5) Applicant must submit a copy of the latest Office action from each of the IPAU application(s) containing the allowable/patentable claim(s) along with an English translation thereof and a statement that the English translation is accurate;
(6) Applicant must submit an IDS listing the documents cited by the IPAU examiner in the IPAU Office action along with copies of documents except U.S. patents or U.S. patent application publications; and
(7) The required petition fee under 37 CFR 1.17(h).

In light of the renewed petition, which included a preliminary amendment that allowed the pending claims to correspond to the allowable IPAU claims, the petition now meets all of the requirements outlined above. Therefore, the above-identified application has been accorded "special" status..

All other inquiries concerning the examination or status of the application should be directed to the Patent Application Information Retrieval (PAIR) system.

The application is being forwarded to the examiner for action on the merits commensurate with this decision.

Any inquiry regarding this decision should be directed to Steven N. Meyers, Quality Assurance Specialist, at (571) 272-6611.

Steven N. Meyers,
Quality Assurance Specialist
Technology Center 3600

Sm/sm: 3/9/10

UNITED STATES PATENT AND TRADEMARK OFFICE

UNITED STATES DEPARTMENT OF COMMERCE
United States Patent and Trademark Office
Address: COMMISSIONER FOR PATENTS
P.O. Box 1450
Alexandria, Virginia 22313-1450
www.uspto.gov

APPLICATION NO.	FILING DATE	FIRST NAMED INVENTOR	ATTORNEY DOCKET NO.	CONFIRMATION NO.
12/389,082	02/19/2009	Dariusz S. Kaminski	60374.0020USC1/A-12728	2594

7590 12/21/2009

MERCHANT & GOULD
SCIENTIFIC ATLANTA, A CISCO COMPANY
P.O. BOX 2903
MINNEAPOLIS, MN 55402-0903

EXAMINER

ART UNIT	PAPER NUMBER
2621	

MAIL DATE	DELIVERY MODE
12/21/2009	PAPER

DECISION GRANTING PETITION UNDER 37 CFR 1.138(d)

The declaration of express abandonment is recognized

This is in response to the petition under 37 CFR 1.138(d), requesting for a refund of any previously paid search fee and excess claims fee in the above-identified application.

The petition is granted.

The express abandonment is recognized. Any previously paid search fee and excess claims fee are hereby refunded.

Telephone inquiries should be directed to the Office of Data Management at (571) 272-4200.

Nioni Farmer

Patent Publication Branch
Office of Data Management

Adjustment date: 12/24/2009 NFARMER
04/22/2009 VVAN11 00000033 190761 12389082
02 FC:1111 540.00 CR

FORM PET651G (Rev. 08/07)

UNITED STATES PATENT AND TRADEMARK OFFICE

UNITED STATES DEPARTMENT OF COMMERCE
United States Patent and Trademark Office
Address: COMMISSIONER FOR PATENTS
P.O. Box 1450
Alexandria, Virginia 22313-1450
www.uspto.gov

APPLICATION NO.	FILING DATE	FIRST NAMED INVENTOR	ATTORNEY DOCKET NO.	CONFIRMATION NO.
12/389,093	02/19/2009	Dariusz S. Kaminski	60374.0020USC2/A-12729	2616

7590 12/21/2009

MERCHANT & GOULD
SCIENTIFIC ATLANTA, A CISCO COMPANY
P.O. BOX 2903
MINNEAPOLIS, MN 55402-0903

EXAMINER

ART UNIT	PAPER NUMBER
2621	

MAIL DATE	DELIVERY MODE
12/21/2009	PAPER

DECISION GRANTING PETITION UNDER 37 CFR 1.138(d)

The declaration of express abandonment is recognized

This is in response to the petition under 37 CFR 1.138(d), requesting for a refund of any previously paid search fee and excess claims fee in the above-identified application.

The petition is granted.

The express abandonment is recognized. Any previously paid search fee and excess claims fee are hereby refunded.

Telephone inquiries should be directed to the Office of Data Management at (571) 272-4200.

Nimi Farmer

Patent Publication Branch
Office of Data Management

Adjustment date: 12/24/2009 NFARMER
04/22/2009 VVAN11 00000032 190761 12389093
02 FC:1111 540.00 CR

FORM PET651G (Rev. 08/07)

UNITED STATES PATENT AND TRADEMARK OFFICE

Commissioner for Patents
United States Patent and Trademark Office
P.O. Box 1450
Alexandria, VA 22313-1450
www.uspto.gov

FOLEY AND LARDNER LLP
SUITE 500
3000 K STREET NW
WASHINGTON, DC 20007

MAILED

SEP 28 2009

OFFICE OF PETITIONS

In re Application of	:	
John Muglia et al	:	
Application No. 12/389,141	:	DECISION ON PETITION
Filed: February 19, 2009	:	TO WITHDRAW
Attorney Docket No. 067276-1191	:	FROM RECORD
	:	

This is a decision on the Request to Withdraw as attorney or agent of record under 37 C.F.R. § 1.36(b), filed August 7, 2009.

The request is **APPROVED**.

The request was signed by Howard Shipley on behalf of the practitioners of record associated with Customer Number 22428.

Applicant is reminded that there is no attorney of record at this time.

The request to change the correspondence of record is not acceptable as the requested correspondence address is not that of: (1) the first named signing inventor; or (2) an intervening assignee of the entire interest under 37 C.F.R 3.71. All future communications from the Office will be directed to the first named signing inventor or the assignee of the entire interest at the first copied address below until otherwise properly notified by the applicant.

Telephone inquiries concerning this decision should be directed to Irvin Dingle at (571) 272-3210.

Irvin Dingle
Petitions Examiner
Office of Petitions

cc: John Muglia
47345 Remer Ave.
Shelby Township, MI 48317

UNITED STATES PATENT AND TRADEMARK OFFICE

UNITED STATES DEPARTMENT OF COMMERCE
United States Patent and Trademark Office
Address: COMMISSIONER FOR PATENTS
P.O. Box 1450
Alexandria, Virginia 22313-1450
www.uspto.gov

APPLICATION NUMBER	FILING OR 371(C) DATE	FIRST NAMED APPLICANT	ATTY. DOCKET NO./TITLE
12/389,141	02/19/2009	John MUGLIA	067276-1191

CONFIRMATION NO. 2696

POA ACCEPTANCE LETTER

John Muglia
47345 Remer Ave.
Shelby Township, MI 48317

OC000000037992805

Date Mailed: 09/25/2009

NOTICE OF ACCEPTANCE OF POWER OF ATTORNEY

This is in response to the Power of Attorney filed 08/07/2009.

The Power of Attorney in this application is accepted. Correspondence in this application will be mailed to the above address as provided by 37 CFR 1.33.

/idingle/

Office of Data Management, Application Assistance Unit (571) 272-4000, or (571) 272-4200, or 1-888-786-0101

UNITED STATES PATENT AND TRADEMARK OFFICE

UNITED STATES DEPARTMENT OF COMMERCE
United States Patent and Trademark Office
Address: COMMISSIONER FOR PATENTS
P.O. Box 1450
Alexandria, Virginia 22313-1450
www.uspto.gov

APPLICATION NUMBER	FILING OR 371(C) DATE	FIRST NAMED APPLICANT	ATTY. DOCKET NO./TITLE
12/389,141	02/19/2009	John MUGLIA	067276-1191

CONFIRMATION NO. 2696

POWER OF ATTORNEY NOTICE

22428
FOLEY AND LARDNER LLP
SUITE 500
3000 K STREET NW
WASHINGTON, DC 20007

OC000000037992748

Date Mailed: 09/25/2009

NOTICE REGARDING CHANGE OF POWER OF ATTORNEY

This is in response to the Power of Attorney filed 08/07/2009.

- The withdrawal as attorney in this application has been accepted. Future correspondence will be mailed to the new address of record. 37 CFR 1.33.

/idingle/

Office of Data Management, Application Assistance Unit (571) 272-4000, or (571) 272-4200, or 1-888-786-0101

UNITED STATES PATENT AND TRADEMARK OFFICE

Commissioner for Patents
United States Patent and Trademark Office
P.O. Box 1450
Alexandria, VA 22313-1450
www.uspto.gov

LADAS & PARRY
5670 WILSHIRE BOULEVARD, SUITE 2100
LOS ANGELES, CA 90036-5679

MAILED

APR 2 6 2010

OFFICE OF PETITIONS

In re Application of	:	
Joo Gon Kim	:	DECISION ON PETITION
Application No. 12/389,160	:	TO WITHDRAW
Filed: February 19, 2009	:	FROM RECORD
Attorney Docket No. 086121-0036	:	

This is a decision on the Request to Withdraw as attorney or agent of record under 37 C.F.R. § 1.36(b), filed March 4, 2010.

The request is **NOT APPROVED** because it is moot.

A review of the file record indicates that on April 5, 2010 the power of attorney to Ladas & Parry was revoked by the assignee of the patent application. Accordingly, the request to withdraw under 37 C.F.R. § 1.36(b) is moot.

All future communications from the Office will be directed to the below-listed address until otherwise notified by applicant.

Telephone inquires concerning this decision should be directed to the undersigned at 571-272-7751. All other inquires concerning either the examination or status of the application should be directed to the Technology Center.

Joan Olszewski
Petitions Examiner
Office of Petitions

cc: MCDERMOTT WILL & EMERY LLP
600 13TH STREET, N.W.
WASHINGTON DC 20005-3096

UNITED STATES PATENT AND TRADEMARK OFFICE

UNITED STATES DEPARTMENT OF COMMERCE
United States Patent and Trademark Office
Address: COMMISSIONER FOR PATENTS
P.O. Box 1450
Alexandria, Virginia 22313-1450
www.uspto.gov

APPLICATION NO.	FILING DATE	FIRST NAMED INVENTOR	ATTORNEY DOCKET NO.	CONFIRMATION NO.
12/389,184	02/19/2009	Terunobu Hara	SUTOSH.342AUS	2790

20995 7590 06/01/2010
KNOBBE MARTENS OLSON & BEAR LLP
2040 MAIN STREET
FOURTEENTH FLOOR
IRVINE, CA 92614

EXAMINER

ART UNIT	PAPER NUMBER
2194	

NOTIFICATION DATE	DELIVERY MODE
06/01/2010	ELECTRONIC

Please find below and/or attached an Office communication concerning this application or proceeding.

The time period for reply, if any, is set in the attached communication.

Notice of the Office communication was sent electronically on above-indicated "Notification Date" to the following e-mail address(es):

jcartee@kmob.com
efiling@kmob.com
eOAPilot@kmob.com

UNITED STATES PATENT AND TRADEMARK OFFICE

Commissioner for Patents
United States Patent and Trademark Office
P.O. Box 1450
Alexandria, VA 22313-1450
www.uspto.gov

Knobbe, Martens, Olson & Bear LLP
2040 Main Street, 14th Floor
Irvine, CA 92614

In re Application of: HARA, T.
Application No. 12/389,184
Filed: February 19, 2009
For: Information processing apparatus and device controller driving/controlling method.

DECISION ON REQUEST TO PARTICIPATE IN PATENT PROSECUTION HIGHWAY PILOT PROGRAM AND PETITION TO MAKE SPECIAL UNDER 37 CFR 1.102(d)

This is a decision on the request to participate in the Patent Prosecution Highway (PPH) pilot program and the petition under 37 CFR 1.102(d), filed April 9, 2010 to make the above-identified application special.

The petition is **GRANTED.**

A grantable request to participate in the PPH program and petition to make special require:

(1) The U.S. application is
(a) a Paris Convention application which either
(i) validly claims priority under 35 U.S.C. 119(a) and 37 CFR 1.55 to one or more applications filed in the JPO, or
(ii) validly claims priority to a PCT application that contains no priority claims,

Or

(b) a national stage application under the PCT (an application which entered the national stage in the U.S. from a PCT international application after compliance with 35 U.S.C. 371), which PCT application
(i) validly claims priority to an application filed in the JPO, or
(ii) validly claims priority to a PCT application that contains no priority claims, or
(iii) contains no priority claim,

Or

(c) a so-called bypass application filed under 35 U.S.C. 111 (a) which validly claims benefit under 35 U.S.C. 120 to a PCT application, which PCT application
(i) validly claims priority to an application filed in the JPO, or

(ii) validly claims priority to a PCT application that contains no priority claims, or
(iii) contains no priority claim.

Where the JPO application that contains the allowable/patentable claims is not the same application for which priority is claimed in the U.S. application, applicant must identify the relationship between the JPO application that contains the allowable/patentable claims and the JPO priority application claimed in the U.S. application.

(2) Applicant must submit a copy of:
a. The allowable/patentable claim(s) from the JPO application(s) or if a copy of the allowable/patentable claims is available via the Dossier Access System (DAS) applicant may request the USPTO obtain a copy from the DAS, however if the USPTO is unable to obtain a copy from the DAS the applicant will be required to submit a copy;
b. An English translation of the allowable/patentable claim(s) and
c. A statement that the English translation is accurate;

(3) Applicant must:
a. Ensure all the claims in the U.S. application must sufficiently correspond or be amended to sufficiently correspond to the allowable/patentable claim(s) in the JPO application(s) and
b. Submit a claims correspondence table in English;

(4) Examination of the U.S. application has not begun;

(5) Applicant must submit:
a. Documentation of prior office action:
i. a copy of the office action(s)just prior to the "Decision to Grant a Patent" from each of the JPO application(s) containing the allowable/patentable claim(s) or
ii. if the allowable/patentable claims(s) are from a "Notification of Reasons for Refusal" then the Notification of Reasons for Refusal or
iii. if the JPO application is a first action allowance then no office action from the JPO is necessary should be indicated on the request/petition form;

Further, if a copy of the documents from a or b above is available via the Dossier Access System (DAS) applicant may request the USPTO obtain a copy from the DAS, however if the USPTO is unable to obtain a copy from the DAS the applicant will be required to submit a copy; b. An English language translation of the JPO Office action from (5)(a)(i)-(ii) above c. A statement that the English translation is accurate;

(6) Applicant must submit:
a. An IDS listing the documents cited by the JPO examiner in the JPO office action (unless already submitted in this application)
b. Copies of the documents except U.S. patents or U.S. patent application publications (unless already submitted in this application);

(7) The required petition fee under 37 CFR 1.17(h).

The petition is **GRANTED.**

The request to participate in the PPH pilot program and petition are found to comply with the above requirements. Accordingly, the above-identified application has been accorded "special" status.

Telephone inquiries concerning this decision should be directed to Mano Padmanabhan at 571-272-4210.

All other inquiries concerning the examination or status of the application is accessible in the PAIR system at http://www.uspto.gov/ebc/index.html.

The application is being forwarded to the examiner for action on the merits commensurate with this decision.

/Mano Padmanabhan/

Mano Padmanabhan
Quality Assurance Specialist, Technology Center 2100, Workgroup 2180
571-272-4210

UNITED STATES PATENT AND TRADEMARK OFFICE

Commissioner for Patents
United States Patent and Trademark Office
P.O. Box 1450
Alexandria, VA 22313-1450
www.uspto.gov

MAYER BROWN LLP
P.O. BOX 2828
CHICAGO IL 60690

COPY MAILED
JAN 28 2010

In re Application of	:	
Phillips, Jeffrey O.	:	
Application No. 12/389,243	:	ON PETITION
Filed: February 19, 2009	:	
Attorney Docket No. 09051500	:	

This is a decision on the petition under 37 C.F.R. § 1.137(b), filed November 23, 2009, to revive the above-identified application.

The petition is **GRANTED**.

The petition satisfies the requirements of 37 CFR 1.137(b) in that petitioner has supplied (1) the reply in the form of a Declaration and the $65.00 late surcharge, (2) the petition fee, and (3) a proper statement of unintentional delay.

Telephone inquiries concerning this decision should be directed to the undersigned at (571) 272-3206.

This matter is being referred to the Office of Patent Application Processing for further pre-examination processing. Thereafter, the application will be referred to Technology Center AU 1614 for examination on the merits.

Liana Walsh
Petitions Examiner
Office of Petitions

UNITED STATES PATENT AND TRADEMARK OFFICE

UNITED STATES DEPARTMENT OF COMMERCE
United States Patent and Trademark Office
Address: COMMISSIONER FOR PATENTS
P.O. Box 1450
Alexandria, Virginia 22313-1450
www.uspto.gov

APPLICATION NO.	FILING DATE	FIRST NAMED INVENTOR	ATTORNEY DOCKET NO.	CONFIRMATION NO.
12/389,453	02/20/2009	Ramesh Nallur	60374.0031USC4/A-12725	3288

7590 12/30/2009
MERCHANT & GOULD
SCIENTIFIC ATLANTA, A CISCO COMPANY
P.O. BOX 2903
MINNEAPOLIS, MN 55402-0903

EXAMINER
BANKS HAROLD, MARSHA DENISE

ART UNIT	PAPER NUMBER
2621	

MAIL DATE	DELIVERY MODE
12/30/2009	PAPER

DECISION GRANTING PETITION UNDER 37 CFR 1.138(d)

The declaration of express abandonment is recognized

This is in response to the petition under 37 CFR 1.138(d), requesting for a refund of any previously paid search fee and excess claims fee in the above-identified application.

The petition is granted.

The express abandonment is recognized. Any previously paid search fee and excess claims fee are hereby refunded.

Telephone inquiries should be directed to the Office of Data Management at (571) 272-4200.

Tom Farmer

Patent Publication Branch
Office of Data Management

Adjustment date: 12/31/2009 NFARMER
01/05/2009 ACCITON 00000020 192761 12389453
02 FC:1111 540.00 CR

FORM PET651G (Rev. 08/07)

UNITED STATES PATENT AND TRADEMARK OFFICE

UNITED STATES DEPARTMENT OF COMMERCE
United States Patent and Trademark Office
Address: COMMISSIONER FOR PATENTS
P.O. Box 1450
Alexandria, Virginia 22313-1450
www.uspto.gov

TEXAS INSTRUMENTS INCORPORATED
P O BOX 655474, M/S 3999
DALLAS, TX 75265

Mail Date: 07/23/2010

Applicant	: Lee D. Whetsel	: DECISION ON REQUEST FOR
Patent Number	: 7657806	: RECALCULATION of PATENT
Issue Date	: 02/02/2010	: TERM ADJUSTMENT IN VIEW
Application No	: 12/389,513	: OF WYETH AND NOTICE OF INTENT TO
Filed	: 02/20/2009	: ISSUE CERTIFICATE OF CORRECTION
		:

The Request for Recalculation is **GRANTED** to the extent indicated.

The patent term adjustment has been determined to be **0** days. The USPTO will *sua sponte* issue a certificate of correction reflecting the amount of PTA days determined by the recalculation.

Prior to the issuance of the certificate of correction, the USPTO will afford patentee an opportunity to be heard and request reconsideration. Accordingly, patentee has **one month or thirty (30) days**, whichever is longer, to file a request for reconsideration of this patent term adjustment calculation. See 35 U.S.C. 154(b)(3)(B)(ii) and 37 CFR 1.322(a)(4). No extensions of time will be granted under 37 CFR 1.136.

Patentee should use document code PET.OP if electronically filing a request for reconsideration of this patent term adjustment calculation. The patentee must also include the information required by 37 CFR 1.705(b)(2) and the fee required by 37 CFR 1.18(e). If patentee does not file a timely request for reconsideration of this patent term adjustment calculation including the information required by 37 CFR 1.705(b)(2) and the fee required by 37 CFR 1.18(e), the USPTO will issue a certificate of correction reflecting the PTA determination noted above.

Patentee should be aware that in order to preserve the right to review in the United States District Court for the District of Columbia of the USPTO patent term adjustment determination, patentee must ensure that he or she also take the steps required under 35 U.S.C. 154(b)(4)(A) in a timely manner. Nothing in the request for recalculation should be construed as providing an alternative time frame for commencing a civil action under 35 U.S.C. 154(b)(4)(A).

Any questions concerning this decision should be directed to the Office of Patent Legal Administration at 571-272-7702.

UNITED STATES PATENT AND TRADEMARK OFFICE

UNITED STATES DEPARTMENT OF COMMERCE
United States Patent and Trademark Office
Address: COMMISSIONER FOR PATENTS
P.O. Box 1450
Alexandria, Virginia 22313-1450
www.uspto.gov

APPLICATION NO.	FILING DATE	FIRST NAMED INVENTOR	ATTORNEY DOCKET NO.	CONFIRMATION NO.
12/389,588	02/20/2009	Ramesh Nallur	60374.0031USC3/A-12727	3503

7590 12/30/2009

MERCHANT & GOULD
SCIENTIFIC ATLANTA, A CISCO COMPANY
P.O. BOX 2903
MINNEAPOLIS, MN 55402-0903

EXAMINER

ART UNIT	PAPER NUMBER
2621	

MAIL DATE	DELIVERY MODE
12/30/2009	PAPER

DECISION GRANTING PETITION UNDER 37 CFR 1.138(d)

The declaration of express abandonment is recognized

This is in response to the petition under 37 CFR 1.138(d), requesting for a refund of any previously paid search fee and excess claims fee in the above-identified application.

The petition is granted.

The express abandonment is recognized. Any previously paid search fee and excess claims fee are hereby refunded.

Telephone inquiries should be directed to the Office of Data Management at (571) 272-4200.

Mimi Jerome

Patent Publication Branch
Office of Data Management

Adjustment date: 12/31/2009 HFARMER
03/03/2009 AGOITOM 00000013 193761 12389588
02 FC:1111 540.00 CR

FORM PET651G (Rev. 08/07)

UNITED STATES PATENT AND TRADEMARK OFFICE

UNITED STATES DEPARTMENT OF COMMERCE
United States Patent and Trademark Office
Address: COMMISSIONER FOR PATENTS
P.O. Box 1450
Alexandria, Virginia 22313-1450
www.uspto.gov

APPLICATION NO.	FILING DATE	FIRST NAMED INVENTOR	ATTORNEY DOCKET NO.	CONFIRMATION NO.
12/389,594	02/20/2009	ARTURO A. RODRIGUEZ	60374.0061USC1/A-12706	3512

7590 12/30/2009
MERCHANT & GOULD
SCIENTIFIC ATLANTA, A CISCO COMPANY
P.O. BOX 2903
MINNEAPOLIS, MN 55402-0903

EXAMINER
SHELEHEDA, JAMES R

ART UNIT	PAPER NUMBER
2424	

MAIL DATE	DELIVERY MODE
12/30/2009	PAPER

DECISION GRANTING PETITION UNDER 37 CFR 1.138(d)

The declaration of express abandonment is recognized

This is in response to the petition under 37 CFR 1.138(d), requesting for a refund of any previously paid search fee and excess claims fee in the above-identified application.

The petition is granted.

The express abandonment is recognized. Any previously paid search fee and excess claims fee are hereby refunded.

Telephone inquiries should be directed to the Office of Data Management at (571) 272-4200.

Nioni Farmer

Patent Publication Branch
Office of Data Management

Adjustment date: 12/31/2009 NFARMER
03/03/2009 ASCITON 00000017 192761 12389594
02 FC:1111 540.00 CR

FORM PET651G (Rev. 08/07)

UNITED STATES PATENT AND TRADEMARK OFFICE

UNITED STATES DEPARTMENT OF COMMERCE
United States Patent and Trademark Office
Address: COMMISSIONER FOR PATENTS
P.O. Box 1450
Alexandria, Virginia 22313-1450
www.uspto.gov

APPLICATION NO.	FILING DATE	FIRST NAMED INVENTOR	ATTORNEY DOCKET NO.	CONFIRMATION NO.
12/389,612	02/20/2009	Arturo A. Rodriguez	60374.0116USC3	3547

7590 12/30/2009
MERCHANT & GOULD
SCIENTIFIC ATLANTA, A CISCO COMPANY
P.O. BOX 2903
MINNEAPOLIS, MN 55402-0903

EXAMINER
CHOWDHURY, SUMAIYA A

ART UNIT	PAPER NUMBER
2421	

MAIL DATE	DELIVERY MODE
12/30/2009	PAPER

DECISION GRANTING PETITION UNDER 37 CFR 1.138(d)

The declaration of express abandonment is recognized

This is in response to the petition under 37 CFR 1.138(d), requesting for a refund of any previously paid search fee and excess claims fee in the above-identified application.

The petition is granted.

The express abandonment is recognized. Any previously paid search fee and excess claims fee are hereby refunded.

Telephone inquiries should be directed to the Office of Data Management at (571) 272-4200.

Patent Publication Branch
Office of Data Management

Adjustment date: 12/31/2009 NFARMER
CA/15/2009 NTERLEMI 00000036 193761 12389612
02 FC:1111 542.00 CR

FORM PET651G (Rev. 08/07)

UNITED STATES PATENT AND TRADEMARK OFFICE

UNITED STATES DEPARTMENT OF COMMERCE
United States Patent and Trademark Office
Address: COMMISSIONER FOR PATENTS
P.O. Box 1450
Alexandria, Virginia 22313-1450
www.uspto.gov

APPLICATION NO.	FILING DATE	FIRST NAMED INVENTOR	ATTORNEY DOCKET NO.	CONFIRMATION NO.
12/389,645	02/20/2009	Arturo A. Rodriguez	60374.0116USC4	3601

7590 12/29/2009

MERCHANT & GOULD
SCIENTIFIC ATLANTA, A CISCO COMPANY
P.O. BOX 2903
MINNEAPOLIS, MN 55402-0903

EXAMINER
CHOWDHURY, SUMAIYA A

ART UNIT	PAPER NUMBER
2421	

MAIL DATE	DELIVERY MODE
12/29/2009	PAPER

DECISION GRANTING PETITION UNDER 37 CFR 1.138(d)

The declaration of express abandonment is recognized

This is in response to the petition under 37 CFR 1.138(d), requesting for a refund of any previously paid search fee and excess claims fee in the above-identified application.

The petition is granted.

The express abandonment is recognized. Any previously paid search fee and excess claims fee are hereby refunded.

Telephone inquiries should be directed to the Office of Data Management at (571) 272-4200.

Mimi Farmer

Patent Publication Branch
Office of Data Management

Adjustment date: 12/29/2009 NFARMER
04/16/2009 MTEKLEMI 00000005 192761 12389645
02 FC:1111 540.00 CR

FORM PET651G (Rev. 08/07)

UNITED STATES PATENT AND TRADEMARK OFFICE

UNITED STATES DEPARTMENT OF COMMERCE
United States Patent and Trademark Office
Address: COMMISSIONER FOR PATENTS
P.O. Box 1450
Alexandria, Virginia 22313-1450
www.uspto.gov

APPLICATION NO.	FILING DATE	FIRST NAMED INVENTOR	ATTORNEY DOCKET NO.	CONFIRMATION NO.
12/389,699	02/20/2009	Bharat S. Bagepalli	232645	3717

7788 7590 02/04/2010
GE ENERGY GENERAL ELECTRIC
C/O ERNEST G. CUSICK
ONE RIVER ROAD, BLD. 43, ROOM 225
SCHENECTADY, NY 12345

EXAMINER
LOOK, EDWARD K

ART UNIT	PAPER NUMBER
3745	

MAIL DATE	DELIVERY MODE
02/04/2010	PAPER

Please find below and/or attached an Office communication concerning this application or proceeding.

The time period for reply, if any, is set in the attached communication.

UNITED STATES PATENT AND TRADEMARK OFFICE

Commissioner for Patents
United States Patent and Trademark Office
P.O. Box 1450
Alexandria, VA 22313-1450
www.uspto.gov

GE ENERGY GENERAL ELECTRIC
C/O ERNEST G. CUSICK
ONE RIVER ROAD, BLD. 43, ROOM 225
SCHENECTADY NY 12345

In re Application of	:	
BAGEPALLI, BHARAT S. et al	:	DECISION ON PETITION
Application No. 12/389,699	:	TO MAKE SPECIAL UNDER
Filed: Feb. 20, 2009	:	THE GREEN TECHNOLOGY
Attorney Docket No. 232645	:	PILOT PROGRAM
Title: SPAR CAP FOR WIND TURBINE BLADES		

This is a decision on the petition under 37 CFR 1.102, filed December 14, 2009, to make the above-identified application special under the pilot program for applications pertaining to Green Technologies as set forth 74 Federal Register Notice 64666 (December 8, 2009).

The petition is **DISMISSED**.

If reconsideration of this decision is desired, a petition for reconsideration must be filed within ONE (1) MONTH OR THIRTY (30) DAYS from the mail date of this decision, whichever is longer. No extension of this time limit can be granted under 37 CFR 1.136(a) or (b). The petition for reconsideration should include an exhaustive attempt to provide the lacking item(s) noted below, since, after a decision on the petition for reconsideration, no further reconsideration or review of the matter will be undertaken by the Director.

A grantable petition to make an application special under 37 CFR 1.102 and the pilot program as set forth in 74 FR 64666 must be directed to a nonprovisional application filed under 35 USC 111(a) or be a national stage entry under 35 USC 371, exclusive of any reissue applications and be filed prior to the date of the notice, December 8, 2009.

In order to qualify for special status, the following requirements must be met. 1) The application must be classified in one of the eligible US classifications listed in section VI of the notice. 2) The application must have no more than 3 independent claims and no more than 20 total claims. 3) The application must not contain any multiple dependent claims. 4) The petition must state the basis for seeking special status, i.e., the claimed invention either: A) materially enhances the quality of the environment or B) materially contributes to: i) the discovery or development of renewable energy resources, ii) the more efficient utilization and conservation of energy

resources, or iii) greenhouse gas emission reduction. 5) If the disclosure is not clear on its face that the claimed invention materially contributes under category (A) or (B), the petition must be accompanied by a statement by the applicant, assignee, or an attorney/agent registered to practice before the Office explaining how the materiality standard is met. 6) A statement that applicant will agree to make an election without traverse in a telephonic interview if a restriction requirement is made by the examiner. 7) The petition to make special must be filed electronically. 8) The petition must be filed at least one day prior to the date that a first Office Action appears in the Patent Application Information Retrieval (PAIR) system. 9) The petition must be accompanied by a request for early publication in compliance with 37 CFR 1.219 and include the publication fee as set forth in 37 CFR 1.18(d).

The requirement for a fee for consideration of the petition to make special for applications pertaining to Green Technologies has been waived.

The petition lacks item(s) #1. In regard to item 1, petitioner should note that this application has been classified in an area (USPC 416/226) that is not one of the eligible US classifications listed in section VI of the notice. Therefore, this application is not eligible for the Pilot Program. The classification limitations are purposefully made to be narrow for the Pilot Program; however, these may be expanded based upon the success of the Pilot Program. Petitioner may file a preliminary amendment that would cause this application to be classified elsewhere. However, while petitioner may suggest a classification (see, e.g., MPEP 708.02(a)(VII)(C)), the application will be assigned to the most appropriate classification based upon current U.S. classification guidelines. Furthermore, a petition for the Pilot Program should not be filed until and unless all of the requirements set forth in the Notice are met; i.e., a petition should not be filed for an application that is currently classified outside the eligible classifications set forth in the Notice.

Any reconsideration of this decision should be submitted through the USPTO electronic filing system, EFS-Web, and selecting the document description of "Petition for Green Tech Pilot" on the EFS-Web screen.

Telephone inquiries concerning this decision should be directed to Henry C. Yuen at 571-272-4856.

The application is being forwarded to the Technology Center Art Unit 3745 for action in its regular turn.

/Henry C. Yuen/

Henry C. Yuen
Quality Assurance Specialist
Technology Center 3700

UNITED STATES PATENT AND TRADEMARK OFFICE

UNITED STATES DEPARTMENT OF COMMERCE
United States Patent and Trademark Office
Address: COMMISSIONER FOR PATENTS
P.O. Box 1450
Alexandria, Virginia 22313-1450
www.uspto.gov

APPLICATION NO.	FILING DATE	FIRST NAMED INVENTOR	ATTORNEY DOCKET NO.	CONFIRMATION NO.
12/389,699	02/20/2009	Bharat S. Bagepalli	232645	3717

7788 7590 06/28/2010
GE ENERGY GENERAL ELECTRIC
C/O ERNEST G. CUSICK
ONE RIVER ROAD, BLD. 43, ROOM 225
SCHENECTADY, NY 12345

EXAMINER
LOOK, EDWARD K

ART UNIT	PAPER NUMBER
3745	

MAIL DATE	DELIVERY MODE
06/28/2010	PAPER

Please find below and/or attached an Office communication concerning this application or proceeding.

The time period for reply, if any, is set in the attached communication.

UNITED STATES PATENT AND TRADEMARK OFFICE

Commissioner for Patents
United States Patent and Trademark Office
P.O. Box 1450
Alexandria, VA 22313-1450
www.uspto.gov

GE ENERGY GENERAL ELECTRIC
C/O ERNEST G. CUSICK
ONE RIVER ROAD, BLD. 43, ROOM 225
SCHENECTADY NY 12345

In re Application of	:	
Bharat S. Bagepalli et al.	:	DECISION ON PETITION
Application No. **12/389699**	:	TO MAKE SPECIAL UNDER
Filed: September February 20, 2009	:	THE GREEN TECHNOLOGY
Attorney Docket No. 233707 (22402-137)	:	PILOT PROGRAM

This is a decision on the petition under 37 CFR 1.102, filed 6/14/2010, to make the above-identified application special under the pilot program for applications pertaining to Green Technologies as set forth in 74 Federal Register Notice 64666 (December 8, 2009) and amended by 75 Federal Register Notice 28554 (May 21, 2010).

The petition is **GRANTED**.

A grantable petition to make an application special under 37 CFR 1.102 and the pilot program as set forth in 74 FR 64666 must be directed to a nonprovisional application filed under 35 USC 111(a) or be a national stage entry under 35 USC 371, exclusive of any reissue applications and be filed prior to the date of the notice, December 8, 2009.

In order to qualify for special status, the following requirements must be met. 1) The application must have no more than 3 independent claims and no more than 20 total claims. 2) The application must not contain any multiple dependent claims. 3) The petition must state the basis for seeking special status, i.e., the claimed invention either: A) materially enhances the quality of the environment or B) materially contributes to: i) the discovery or development of renewable energy resources, ii) the more efficient utilization and conservation of energy resources, or iii) greenhouse gas emission reduction. 4) If the disclosure is not clear on its face that the claimed invention materially contributes under category (A) or (B), the petition must be accompanied by a statement by the applicant, assignee, or an attorney/agent registered to practice before the Office explaining how the materiality standard is met. 5) A statement that applicant will agree to make an election without traverse in a telephonic interview if a restriction requirement is made by the examiner. 6) The petition to make special must be filed electronically. 7) The petition must be filed at least one day prior to the date that a first Office Action appears in the Patent Application Information Retrieval (PAIR) system. 8) The petition must be accompanied by a request for early publication in compliance with 37 CFR 1.219 and include the publication fee as set forth in 37 CFR 1.18(d).

The requirement for a fee for consideration of the petition to make special for applications pertaining to Green Technologies has been waived.

The instant petition complies with items 1 – 8 above. Accordingly, the above-identified application has been accorded "special" status.

Telephone inquires concerning this decision should be directed to Henry Yuen at 571-272-4856.

The application is being forwarded to the Technology Center Art Unit 3745 for action on the merits commensurate with this decision.

/Henry Yuen/

Henry Yuen
Quality Assurance Specialist
Technology Center 3700

UNITED STATES PATENT AND TRADEMARK OFFICE

UNITED STATES DEPARTMENT OF COMMERCE
United States Patent and Trademark Office
Address: COMMISSIONER FOR PATENTS
P.O. Box 1450
Alexandria, Virginia 22313-1450
www.uspto.gov

APPLICATION NO.	FILING DATE	FIRST NAMED INVENTOR	ATTORNEY DOCKET NO.	CONFIRMATION NO.
12/389,704	02/20/2009	Yong SUN	338582US2CRL	3723

7590 03/01/2010
OBLON, SPIVAK, MCCLELLAND MAIER & NEUSTADT, L.L.P.
1940 DUKE STREET
ALEXANDRIA, VA 22314

EXAMINER
BOST, DWAYNE D

ART UNIT	PAPER NUMBER
2617	

NOTIFICATION DATE	DELIVERY MODE
03/01/2010	ELECTRONIC

DECISION GRANTING PETITION UNDER 37 CFR 1.138(d)

The declaration of express abandonment is recognized

This is in response to the petition under 37 CFR 1.138(d), requesting for a refund of any previously paid search fee and excess claims fee in the above-identified application.

The petition is granted.

The express abandonment is recognized. Any previously paid search fee and excess claims fee are hereby refunded.

Telephone inquiries should be directed to the Office of Data Management at (571) 272-4200.

Nioni Farmer

Patent Publication Branch
Office of Data Management

Adjustment date: 03/01/2010 NFARMER
02/20/2009 INTERSW 00002432 12389704
02 FC:1111 -540.00 OP

FORM PET651G (Rev. 08/07)

UNITED STATES PATENT AND TRADEMARK OFFICE

UNITED STATES DEPARTMENT OF COMMERCE
United States Patent and Trademark Office
Address: COMMISSIONER FOR PATENTS
P.O. Box 1450
Alexandria, Virginia 22313-1450
www.uspto.gov

APPLICATION NO.	FILING DATE	FIRST NAMED INVENTOR	ATTORNEY DOCKET NO.	CONFIRMATION NO.
12/389,735	02/20/2009	Jan Kehler	0526-US-DIV	3777

7590 01/28/2010
LUNDBECK RESEARCH USA, INC.
ATTENTION: STEPHEN G. KALINCHAK, LEGAL
215 COLLEGE ROAD
PARAMUS, NJ 07652

EXAMINER
CHU, YONG LIANG

ART UNIT	PAPER NUMBER
1626	

MAIL DATE	DELIVERY MODE
01/28/2010	PAPER

DECISION GRANTING PETITION UNDER 37 CFR 1.138(d)

The declaration of express abandonment is recognized

This is in response to the petition under 37 CFR 1.138(d), requesting for a refund of any previously paid search fee and excess claims fee in the above-identified application.

The petition is granted.

The express abandonment is recognized. Any previously paid search fee and excess claims fee are hereby refunded.

Telephone inquiries should be directed to the Office of Data Management at (571) 272-4200.

Nioni Farmer

Patent Publication Branch
Office of Data Management

Adjustment date: 01/29/2010 NFARMER
02/20/2009 INTERSW 00000022 503201 12389735
02 FC:1111 540.00 CR

FORM PET651G (Rev. 08/07)

UNITED STATES PATENT AND TRADEMARK OFFICE

UNITED STATES DEPARTMENT OF COMMERCE
United States Patent and Trademark Office
Address: COMMISSIONER FOR PATENTS
P.O. Box 1450
Alexandria, Virginia 22313-1450
www.uspto.gov

APPLICATION NO.	FILING DATE	FIRST NAMED INVENTOR	ATTORNEY DOCKET NO.	CONFIRMATION NO.
12/389,737	02/20/2009	Arturo A. Rodriguez	60374.0125USC1/A-12734	3781

7590 12/21/2009

MERCHANT & GOULD
SCIENTIFIC ATLANTA, A CISCO COMPANY
P.O. BOX 2903
MINNEAPOLIS, MN 55402-0903

EXAMINER
KOENIG, ANDREW Y

ART UNIT	PAPER NUMBER
2423	

MAIL DATE	DELIVERY MODE
12/21/2009	PAPER

DECISION GRANTING PETITION UNDER 37 CFR 1.138(d)

The declaration of express abandonment is recognized

This is in response to the petition under 37 CFR 1.138(d), requesting for a refund of any previously paid search fee and excess claims fee in the above-identified application.

The petition is granted.

The express abandonment is recognized. Any previously paid search fee and excess claims fee are hereby refunded.

Telephone inquiries should be directed to the Office of Data Management at (571) 272-4200.

Nioni Farmer

Patent Publication Branch
Office of Data Management

Adjustment date: 12/24/2009 NFARMER
04/17/2009 AGOITOM 00000007 190761 12389737
02 FC:1111 540.00 CR

FORM PET651G (Rev. 08/07)

UNITED STATES PATENT AND TRADEMARK OFFICE

UNITED STATES DEPARTMENT OF COMMERCE
United States Patent and Trademark Office
Address: COMMISSIONER FOR PATENTS
P.O. Box 1450
Alexandria, Virginia 22313-1450
www.uspto.gov

APPLICATION NO.	FILING DATE	FIRST NAMED INVENTOR	ATTORNEY DOCKET NO.	CONFIRMATION NO.
12/389,752	02/20/2009	Christian RAFFIN	037068.61249US	3807

7590 04/22/2010
CROWELL & MORING LLP
INTELLECTUAL PROPERTY GROUP
P.O. BOX 14300
WASHINGTON, DC 20044-4300

EXAMINER
KING, BRADLEY T

ART UNIT	PAPER NUMBER
3657	

MAIL DATE	DELIVERY MODE
04/22/2010	PAPER

DECISION GRANTING PETITION UNDER 37 CFR 1.138(d)

The declaration of express abandonment is recognized

This is in response to the petition under 37 CFR 1.138(d), requesting for a refund of any previously paid search fee and excess claims fee in the above-identified application.

The petition is granted.

The express abandonment is recognized. Any previously paid search fee and excess claims fee are hereby refunded.

Telephone inquiries should be directed to the Office of Data Management at (571) 272-4200.

Nomie Farmer

Patent Publication Branch
Office of Data Management

Refund Ref: 04/22/2010 [illegible]

Credit Card Refund Total: $540.00

[illegible]

Adjustment date: 04/22/2010 NFARMER
02/20/2009 INTEFSW 00000797 12389752
02 FC:1111 -540.00 OP

FORM PET651G (Rev. 08/07)

UNITED STATES PATENT AND TRADEMARK OFFICE

UNITED STATES DEPARTMENT OF COMMERCE
United States Patent and Trademark Office
Address: COMMISSIONER FOR PATENTS
P.O. Box 1450
Alexandria, Virginia 22313-1450
www.uspto.gov

APPLICATION NO.	FILING DATE	FIRST NAMED INVENTOR	ATTORNEY DOCKET NO.	CONFIRMATION NO.
12/389,774	02/20/2009	Arturo A. Rodriguez	60374.0053USC2/A-12720	3858

7590 12/30/2009
MERCHANT & GOULD
SCIENTIFIC ATLANTA, A CISCO COMPANY
P.O. BOX 2903
MINNEAPOLIS, MN 55402-0903

EXAMINER
KOENIG, ANDREW Y

ART UNIT	PAPER NUMBER
2423	

MAIL DATE	DELIVERY MODE
12/30/2009	PAPER

DECISION GRANTING PETITION UNDER 37 CFR 1.138(d)

The declaration of express abandonment is recognized

This is in response to the petition under 37 CFR 1.138(d), requesting for a refund of any previously paid search fee and excess claims fee in the above-identified application.

The petition is granted.

The express abandonment is recognized. Any previously paid search fee and excess claims fee are hereby refunded.

Telephone inquiries should be directed to the Office of Data Management at (571) 272-4200.

Tomi Farmer

Patent Publication Branch
Office of Data Management

Adjustment date: 12/31/2009 NFARMER
03/03/2009 ACDITOM 00000023 199761 12389774
02 FC:1111 540.00 CR

FORM PET651G (Rev. 08/07)

UNITED STATES PATENT AND TRADEMARK OFFICE

UNITED STATES DEPARTMENT OF COMMERCE
United States Patent and Trademark Office
Address: COMMISSIONER FOR PATENTS
P.O. Box 1450
Alexandria, Virginia 22313-1450
www.uspto.gov

APPLICATION NO.	FILING DATE	FIRST NAMED INVENTOR	ATTORNEY DOCKET NO.	CONFIRMATION NO.
12/389,777	02/20/2009	Arturo A. Rodriguez	60374.0053USC3/A-12723	3862

7590 12/30/2009
MERCHANT & GOULD
SCIENTIFIC ATLANTA, A CISCO COMPANY
P.O. BOX 2903
MINNEAPOLIS, MN 55402-0903

EXAMINER
KOENIG, ANDREW Y

ART UNIT	PAPER NUMBER
2423	

MAIL DATE	DELIVERY MODE
12/30/2009	PAPER

DECISION GRANTING PETITION UNDER 37 CFR 1.138(d)

The declaration of express abandonment is recognized

This is in response to the petition under 37 CFR 1.138(d), requesting for a refund of any previously paid search fee and excess claims fee in the above-identified application.

The petition is granted.

The express abandonment is recognized. Any previously paid search fee and excess claims fee are hereby refunded.

Telephone inquiries should be directed to the Office of Data Management at (571) 272-4200.

Tom Farmer

Patent Publication Branch
Office of Data Management

Adjustment date: 12/31/2009 NFARMER
03/03/2009 AGOITOM 00000022 193761 12389777
02 FC:1111 540.00 OP

FORM PET651G (Rev. 08/07)

UNITED STATES PATENT AND TRADEMARK OFFICE

UNITED STATES DEPARTMENT OF COMMERCE
United States Patent and Trademark Office
Address: COMMISSIONER FOR PATENTS
P.O. Box 1450
Alexandria, Virginia 22313-1450
www.uspto.gov

APPLICATION NO.	FILING DATE	FIRST NAMED INVENTOR	ATTORNEY DOCKET NO.	CONFIRMATION NO.
12/389,789	02/20/2009	Christian Miculka	612,406-048	3880

34263 7590 04/01/2009
O"Melveny & Myers LLP
IP&T Calendar Department LA-13-A7
400 South Hope Street
Los Angeles, CA 90071-2899

EXAMINER

ART UNIT	PAPER NUMBER
1623	

MAIL DATE	DELIVERY MODE
04/01/2009	PAPER

Please find below and/or attached an Office communication concerning this application or proceeding.

The time period for reply, if any, is set in the attached communication.

UNITED STATES PATENT AND TRADEMARK OFFICE

Commissioner for Patents
United States Patent and Trademark Office
P.O. Box 1450
Alexandria, VA 22313-1450
www.uspto.gov

APR 0 1 2009

34263
O'Melveny & Myers LLP
IP & T Calendar Department LA-13-A7
400 South Hope Street
Los Angeles, CA 90071-2899

In re Application of:	
MICULKA et al	:
Serial No.: 12/389,789	: DECISION
Filed: March 20, 2009	: ON
Docket: 612,406-048	: Petition under
Title: PROCESS FOR PREPARING A PENTOPYRANOSYL NUCLEIC ACID CONJUGATE	: 37 CFR 1.102(d)

This is a decision on the petition filed on March 20, 2009 to make the above-identified application special for accelerated examination procedure under 37 C.F.R. § 1.102(d).

The petition to make the application special is GRANTED.

The application is eligible for accelerated examination and the petition complies with the conditions for granting the application special status pursuant to the "Change to Practice for Petitions in Patent Applications to Make Special and for Accelerated Examination" published June 26, 2006, in the Federal Register. (71 Fed. Reg. 36323).

The prosecution of the instant application will be conducted expeditiously according to the following guidelines.

1. The application will be docketed to an examiner and taken up for action within two weeks of the date of this decision.

2. Restriction Practice:
   If the examiner determines that the claims are not directed to a single invention, a telephone request to elect one single invention will be made pursuant to MPEP 812.01. As a prerequisite to the grant of this petition, the applicant has agreed to make an oral election, by telephone, without traverse. If the applicant refuses to make an election without traverse, or the examiner cannot reach the applicant after a reasonable effort, the examiner will treat the first claimed invention (invention defined by claim 1) as having being constructively elected without traverse for examination. Office action:

If it is determined that, after appropriate consultation, there is a potential rejection or any other issue to be addressed, the examiner will telephone the applicant and arrange an interview to discuss and resolve the issue. An Office action, other than a Notice of Allowance and Fee(s) Due (Notice of Allowance), will not be issued unless either: 1) an interview was conducted but did not result in agreed to action that places the application in condition for allowance, or, 2) a determination is made that an interview would be unlikely to result in the application being placed in condition for allowance, and 3) an internal conference has been held to review any rejection of any claim.

3. Time for Reply:
An Office action other than a Notice of Allowance or a final Office action will set a shortened statutory period of one month or thirty days, whichever is longer, for reply with no extension of time available under 37 CFR 1.136(a). Failure to timely file a reply within this non-extendible period for reply will result in the abandonment of the application.

4. Reply by Applicant:
A timely reply to an Office action other than the Notice of Allowance must be submitted electronically via EFS or EFS-web and limited to addressing the rejections, objections and requirement made. Any amendment that attempts to: 1) add claims which would result in more than three pending independent claims or more than twenty pending total claims; 2) present claims not encompassed by the pre-examination search or an updated accelerated examination support document; or 3) present claims that are directed a non-elected invention or an invention other than that previously claimed and examined in the application, will be treated as not fully responsive and will not be entered.

   For any amendment to the claims (including any new claim) that is not encompassed by the accelerated examination support document, applicant must provide an updated accelerated examination support document that encompasses the amended or new claims at the time of filing of the amendment.

   To proceed expeditiously with the examination, it is recommended that a reply with amendments made to any claim or with any new claim being added be accompanied by an updated accelerated examination support document or a statement explaining how the amended or new claim is supported by the original accelerated examination support document.

5. Information Disclosure Statement (IDS):
Any IDS filed during prosecution must be submitted electronically via EFS or EFS-web, accompanied by an updated accelerated examination support document, and be in compliance with 37 CFR 1.97 and 1.98.

6. Post-Allowance Processing:
   To expedite processing of the allowed application into a patent, the applicant must: 1) pay the required fees within one month of the date of the Notice of Allowance, and 2) not file any post allowance papers not required by the Office. In no event may the issue fee be paid and accepted later than three months from the date of the Notice of Allowance.

7. After-Final and Appeal Procedures:
   To expedite prosecution, after receiving the final Office action, applicant must: 1) promptly file a notice of appeal, an appeal brief and appeal fees; and 2) not request a pre-appeal brief conference.

   Any amendment, affidavit or other evidence filed after final Office action must comply with applicable rules and the requirements outlined in numbered paragraphs 5 and 6 above.

   On appeal, the application will proceed according to normal appeal procedures. After appeal, the application will again be treated special.

8. Proceedings Outside the Normal Examination Process:
   If the application becomes involved in a proceeding that is outside the normal examination process (e.g., a secrecy order, national security review, interference proceeding, petitions under 37 CFR 1.181, 182 or 183), the application will be treated special before and after such proceeding.

9. Final Disposition:
   The twelve month goal of this accelerated examination procedure ends with a final disposition. The mailing of a final Office action, a Notice of Allowance, the filing of a Notice of Appeal, or the filing of a Request for Continued Examination (RCE) is the final disposition.

If, during prosecution, a paper is not filed electronically using EFS-web, a reply is filed but is not fully responsive, the application is involved in an appeal, or a proceeding outside normal examination process, the application will still be examined expeditiously, however, the final disposition may occur more than twelve months from the filing of the application.

Any inquiry regarding this decision should be directed to Me, Special Program Examiner, at (571) 272-0562.

Cecilia Tsang

Cecilia Tsang, SPE, Art Unit 1654
Technology Center 1600

UNITED STATES PATENT AND TRADEMARK OFFICE

Commissioner for Patents
United States Patent and Trademark Office
P.O. Box 1450
Alexandria, VA 22313-1450
www.uspto.gov

PANDUIT CORP.
LEGAL DEPARTMENT - TP12
17301 SOUTH RIDGELAND AVENUE
TINLEY PARK IL 60477

COPY MAILED

SEP 30 2009

OFFICE OF PETITIONS

In re Application of
Steven A. Jacks et al.
Application No. 12/389,809
Filed: February 20, 2009
Attorney Docket No. LCB624

: DECISION ACCORDING STATUS
: UNDER 37 CFR 1.47(a)

This is in response to the petition filed September 4, 2009 under 37 CFR 1.47(a).

The petition under 37 CFR 1.47(a) is **GRANTED**.

The above-identified application was filed on February 20, 2009 without an Oath or Declaration. Accordingly, on March 6, 2009, a "Notice To File Missing Parts of Application" was mailed which set a two month period for reply.

In response, a four month extension of time request was filed September 4, 2009, with a Declaration signed by all joint inventors except Brian D. Leshin and the instant petition under 37 CFR 1.47(a), arguing that joint inventor Leshin has failed to return executed copies of the oath or declaration and thus by his actions, to cooperate with the filing of the instant application.

A grantable petition under 37 CFR 1.47(a) requires: (1) proof that the non-signing inventor cannot be reached or refuses to sign the oath or declaration after having been presented with the application papers (specification, claims and drawings); (2) an acceptable oath or declaration in compliance with 35 U.S.C. §§ 115 and 116; (3) the petition fee; and (4) a statement of the last known address of the non-signing inventor.

The petition bears proof that the application papers were forwarded to and received by joint inventor Leshin and that to date, he has not returned an executed copy of the oath or declaration.

The above-identified application and papers have been reviewed and found in compliance with 37 CFR 1.47(a). In view thereof, this application is hereby accorded Rule 1.47(a) status.

Thus, as provided in Rule 1.47c, this Office will forward notice of this application's filing to the non-signing inventor at the address given in the petition. Notice of the filing of this application will also be published in the Official Gazette.

Additionally, the petition fee for a petition under 37 CFR 1.47 is set at $200, not $130 as has been indicated in the petition. Thus, petitioner's deposit account no. 16-0228 has been charged in the amount of $200.

This matter is being referred to the Office of Patent Application Processing for further pre-examination processing.

Telephone inquiries concerning this matter may be directed to the undersigned Petitions Attorney at (571) 272-3212.

Patricia Faison-Ball

Patricia Faison-Ball
Senior Petitions Attorney
Office of Petitions

Attorney Docket No. LCB624

IN THE UNITED STATES PATENT AND TRADEMARK OFFICE

Inventors:	Steven A. Jacks, et al.	)	
		)	Group Art Unit: 2833
Serial No.:	12/389,809	)	
		)	Confirmation No.: 3911
Filing Date:	February 20, 2009	)	
		)	Examiner:
For:	Intellegient Inter-Connect and Cross-Connect Patching System	)	

Petition Under 37 CFR 1.47(a)

Dear Sir:

Applicants submit this Petition under 37 CFR 1.47(a). A Statement of Facts in support of this Petition is attached.

The Commissioner is hereby authorized to charge the Petition fee of $130.00 to our Deposit Account No. 16-0228. The Commissioner is authorized to charge any additional fees (or credit any overpayment) associated with this communication to our Deposit Account.

Respectfully submitted,

Dated: September 4, 2009

Zachary J. Smolinski
Reg. No. 47,100
Attorney for Applicants

Customer Number 32915
Panduit Corp.
Legal Department - TP12
17301 S. Ridgeland Avenue
Tinley Park, Illinois 60477-3091
(708) 532-1800, Ext. 1302

Adjustment Date: 10/01/2009 CKHLOK
09/04/2009 INTEFSW 00000430 160228 12389809
02 FC:1464 130.00 CR

10/01/2009 CKHLOK 00000007 160228 12389809
01 FC:1463 200.00 DA

UNITED STATES PATENT AND TRADEMARK OFFICE

UNITED STATES DEPARTMENT OF COMMERCE
United States Patent and Trademark Office
Address: COMMISSIONER FOR PATENTS
P.O. Box 1450
Alexandria, Virginia 22313-1450
www.uspto.gov

APPLICATION NO.	FILING DATE	FIRST NAMED INVENTOR	ATTORNEY DOCKET NO.	CONFIRMATION NO.
12/389,850	02/20/2009	Hiroyuki ICHIEDA	140670	3989

7590 04/15/2010
OLIFF & BERRIDGE, PLC
P.O. BOX 320850
ALEXANDRIA, VA 22320-4850

EXAMINER
OMETZ, DAVID LOUIS

ART UNIT	PAPER NUMBER
2622	

NOTIFICATION DATE	DELIVERY MODE
04/15/2010	ELECTRONIC

DECISION GRANTING PETITION UNDER 37 CFR 1.138(d)

The declaration of express abandonment is recognized

This is in response to the petition under 37 CFR 1.138(d), requesting for a refund of any previously paid search fee and excess claims fee in the above-identified application.

The petition is granted.

The express abandonment is recognized. Any previously paid search fee and excess claims fee are hereby refunded.

Telephone inquiries should be directed to the Office of Data Management at (571) 272-4200.

Patent Publication Branch
Office of Data Management

Adjustment date: 04/14/2010 NFARMER
02/23/2009 INTEFSU 00000795 150451 12389850
02 FC:1111 540.00 CR
04 FC:1201 440.00 CR

FORM PET651G (Rev. 08/07)

UNITED STATES PATENT AND TRADEMARK OFFICE

UNITED STATES DEPARTMENT OF COMMERCE
United States Patent and Trademark Office
Address: COMMISSIONER FOR PATENTS
P.O. Box 1450
Alexandria, Virginia 22313-1450
www.uspto.gov

APPLICATION NO.	FILING DATE	FIRST NAMED INVENTOR	ATTORNEY DOCKET NO.	CONFIRMATION NO.
12/389,997	02/20/2009	Takahiro Nakaminami	061352-0233	4284

53080 7590 03/05/2010
MCDERMOTT WILL & EMERY LLP
600 13TH STREET, NW
WASHINGTON, DC 20005-3096

EXAMINER
MARTIN, PAUL C

ART UNIT	PAPER NUMBER
1657	

MAIL DATE	DELIVERY MODE
03/05/2010	PAPER

Please find below and/or attached an Office communication concerning this application or proceeding.

The time period for reply, if any, is set in the attached communication.

UNITED STATES PATENT AND TRADEMARK OFFICE

Commissioner for Patents
United States Patent and Trademark Office
P.O. Box 1450
Alexandria, VA 22313-1450
www.uspto.gov

MCDERMOTT WILL & EMERY LLP
600 13TH STREET, NW
WASHINGTON DC 20005-3096

MAR 0 5 2010

In re Application of NAKAMINAMI, TAKAHIRO Application No. 12/389,997 Filed: 02/20/2009 Attorney Docket No. 061352-0233	:	DECISION ON REQUEST TO PARTICIPATE IN PATENT PROSECUTION HIGHWAY PROGRAM AND PETITION TO MAKE SPECIAL UNDER 37 CFR 1.102(d)

This is a decision on the request to participate in the Patent Prosecution Highway (PPH) program and the petition under 37 CFR 1.102(d), filed September 4, 2009, to make the above-identified application special.

The request and petition are **GRANTED**.

A grantable request to participate in the PPH program and petition to make special require:

(1) The U.S. application must validly claim priority under 35 U.S.C. 119(a) to one or more applications filed in the JPO;
(2) Applicant must submit a copy of the allowable/patentable claim(s) from the JPO application(s) along with an English translation thereof and a statement that the English translation is accurate;
(3) All the claims in the U.S. application must sufficiently correspond or be amended to sufficiently correspond to the allowable/patentable claim(s) in the JPO application(s);
(4) Examination of the U.S. application has not begun;
(5) Applicant must submit a copy of all the office actions from each of the JPO application(s) containing the allowable/patentable claim(s) along with an English translation thereof and a statement that the English translation is accurate;
(6) Applicant must submit an IDS listing the documents cited by the JPO examiner in the JPO office action along with copies of documents except U.S. patents or U.S. patent application publications; and
(7) The required petition fee under 37 CFR 1.17(h).

The request to participate in the PPH program and petition comply with the above requirements. Accordingly, the above-identified application has been accorded "special" status.

Telephone inquiries concerning this decision should be directed to Ram R. Shukla at 571-272-0735.

All other inquiries concerning the examination or status of the application should be directed to Patent Application Information Retrieval (PAIR) system at the http://www.uspto.gov/ebc/index.html.

The application is being forwarded to the examiner for action on the merits commensurate with this decision.

Ram R. Shukla, Ph.D.
Supervisory Patent Examiner
TC 1600

RAM R. SHUKLA, PH.D.
SUPERVISORY PATENT EXAMINER

UNITED STATES PATENT AND TRADEMARK OFFICE

UNITED STATES DEPARTMENT OF COMMERCE
United States Patent and Trademark Office
Address: COMMISSIONER FOR PATENTS
P.O. Box 1450
Alexandria, Virginia 22313-1450
www.uspto.gov

APPLICATION NO.	FILING DATE	FIRST NAMED INVENTOR	ATTORNEY DOCKET NO.	CONFIRMATION NO.
12/390,161	02/20/2009	Gene Fein	084300-012102/CON	4567

35893 7590 04/03/2009
GREENBERG TRAURIG, LLP
ONE INTERNATIONAL PLACE, 20th FL
ATTN: PATENT ADMINISTRATOR
BOSTON, MA 02110

EXAMINER
CALDWELL, ANDREW T

ART UNIT	PAPER NUMBER
2442	

MAIL DATE	DELIVERY MODE
04/03/2009	PAPER

Please find below and/or attached an Office communication concerning this application or proceeding.

The time period for reply, if any, is set in the attached communication.

UNITED STATES PATENT AND TRADEMARK OFFICE

COMMISSIONER FOR PATENTS
UNITED STATES PATENT AND TRADEMARK OFFICE
WASHINGTON, DC 20231
www.uspto.gov

MAILED

APR 03 2009

TECHNOLOGY CENTER 2100

Chinh H. Pham
Greenberg Traurig, LLP
One International Place, 20th Fl
Boston, MA 02110

In re Application of: FEIN, Gene et. al.
Serial No.: **12/390,161**
Filed: February 20, 2009
Docket: 084300-012102/CON
For: USER INTERFACE IN DATA FORWORDING NETWORK

DECISION ON PETITION TO MAKE SPECIAL FOR NEW APPLICATION UNDER 37 C.F.R. § 1.102 & M.P.E.P. § 708.02

This is a decision on the petition filed on February 20, 2009 to make the above-identified application special for accelerated examination procedure under 37 C.F.R. § 1.102(d).

The petition to make the application special is **DISMISSED**.

REGULATION AND PRACTICE

A grantable petition to make special under 37 C.F.R. § 1.102(d) and pursuant to the "Change to Practice for Petitions in Patent Applications to Make Special and for Accelerated Examination" published in the Federal Register on June 26, 2006 (71 Fed. Reg. 36323), must satisfy the following conditions:

I. Conditions Regarding the Application:
1. the application must be a non-reissue utility or design application filed under 37 CFR 1.111(a);
2. the application, the petition and the required fees must be filed electronically using the USPTO's electronic filing system (EFS), or EFS-web; if not filed electronically, a statement asserting that EFS and EFS-web were not available during the normal business hours.
3. at the time of filing, the application must be complete under 37 CFR 1.51 and in condition for examination;
4. the application must contain three or fewer independent claims and twenty or fewer total claims and the claims must be directed to a single invention.

II. Conditions Regarding the Petition:
The petition must:
1. be filed with the application;
2. include a statement that applicant agrees not to separately argue the patentability of any dependent claim during any appeal in the application;

3. include a statement that applicant agrees to make an election without traverse in a telephone interview.
4. include a statement that applicant agrees to conduct such an interview when requested by the examiner.
5. include a statement, made based on a good faith belief, that a preexamination search in compliance with the following requirements, was conducted, including an identification of the filed of search by United States class and subclass, where applicable, and for database searches, the search logic or chemical structure or sequence used as a query, the name of the file(s) searched and the database service, and the date of the search.
The preexamination search must:

5.1 involve U.S. patents and patent application publications, foreign patent documents, and non-patent literature, unless the applicant can justify with reasonable certainty that no references more pertinent than those already identified are likely to be found in the eliminated sources and includes such a justification with this statement;

5.2. be directed to the claimed invention and encompass all of the features of the claims, giving the claims the broadest reasonable interpretation;

5.3. encompass the disclosed features that may be claimed.

6. must provide in support of the petition an accelerated examination support document.
An accelerated examination support document must include:

6.1. an information disclosure statement (IDS) in compliance with 37 CFR 1.98 citing each reference deemed most closely related to the subject matter of each of the claims;

6.2. an identification of all the limitations in the claims that are disclosed by the reference specifying where the limitation is disclosed in the cited reference;

6.3. a detailed explanation of how each of the claims are patentable over the references cited with particularity required by 37 CFR 1.111(b) and (c);

6.4. a concise statement of the utility of the invention as defined in each of the independent claims (unless the application is a design application);

6.5. a showing of where each limitation of the claims finds support under 35 USC 112, first paragraph, in the written description of the specification. If applicable, the showing must also identify: (1) each means- (or step) plus-function claim element that invokes consideration under 35 UDC 112, sixth paragraph; and (2) the structure, material, or acts in the specification that corresponds to each means- (or step) plus-function claim element that invokes consideration under 35 UDC 112, sixth paragraph; if the application claims the benefit of one or more applications under title 35, United States Code, the showing must also include where each limitation of the claims finds support under 35 USC 112, first paragraph, in each such application in which such supports exists;

6.6. an identification of any cited references that may be disqualified under 35 USC 103(c).

REVIEW OF FACTS

The conditions I 1-4, II 1-4, II 5.3-6.1, II 6.3-6.4, and II 6.6 above are considered to have been met. However, the petition fails to comply with conditions II 5.1–5.2, II 6.2, and II 6.5 above. Therefore, the petition fails to meet the required conditions to be accorded special status under the accelerated examination procedure.

Regarding the requirement of II 5.1, the pre-exam search must include an identification of the field of search by United States class and subclass and the date of the search. *See* MPEP § 708.02(a)(I)(H). A classification search is defined as a complete search of all the documents in a particular subclass, and it is not limited by any text query or other means. *See* MPEP §719.05.

The pre-exam search filed February 20, 2009 fails to provide sufficient field of search based on US Class and subclass and the respective date of that search. The Pre-exam search identifies eight searched class, ***but lists no corresponding subclasses***. *See* PESD, filed Feb. 20, 2009, page 1.

A classification search is defined as a complete search of all the documents in a particular class and class 709 alone has over 70,000 printed publications. *See* MPEP §719.05. A search of class and subclass is more appropriate in terms of number and relevance to search for the most appropriate prior art references. Based upon the claimed subject matter of instant application, a search in the following deemed applicable class(es)/subclasses should be included in order to provide full coverage of where the most pertinent references are most likely to be found:

709/ 217, 219, 231, 238
370/ 235, 238, 378
710/ 22, 26, 38, 56
711/ 1, 147, 148

Regarding the requirement of II 5.2 above, the pre-exam search must be directed to the claimed invention and encompass all of the disclosed features of the claims. *See* MPEP § 708.02(a)(I)(H)(2).

The pre-exam search filed February 20, 2009 fails to fully provide a search that encompasses all of the features of the claims. The search provided seems to be directed at the broad concept of forwarding data, but fails to address for the specific limitations, more specifically **continuously forwarding data from memory to memory without storing in physical storage device**. This particular feature has been identified in the explanation of patentability, thus the alleged patentable features appear to not have been searched. Additionally, the pre-exam search does not address all of the claimed features in claims 2-8, 10-16, and 18-20.

The Petitioner is advised to review the all claim limitations, especially those asserted as patentable distinctions from the cited references to ensure the pre-examination search covers these concepts, and update the search and/or provide any clarification for the deficiencies identified above if deemed necessary.

Regarding the requirement of II 5.2 above, the pre-exam search must be directed to the claimed invention and encompass all of the disclosed features of the claims giving the claims the broadest reasonable interpretation. *See* MPEP § 708.02(a)(I)(H)(2). The broadest reasonable interpretation is defined in light of the specification and consistent with the interpretation that those skilled in the art would reach and/or take on the ordinary and customary meaning attributed to it by those of ordinary skill in the art. *See* MPEP §2111.01.

The pre-exam search filed February 20, 2009 fails to provide a text search that provides enough depth and breadth to cover all concepts of the claimed invention. The text search query fails for lack of inclusion of applicable terms, and their respective synonyms (see examples), as

used in the claimed invention. These terms are exemplary, and should not be considered exhaustive:

> *(network or LAN or WAN); (device or router or node or switch or client or server; routing or switching or forwarding); (messages or packets or frames or data or file); (buffer$ or stor$4 or memory or queu$3); (temporar$ or briefly or momentarily); (continuous$ or constant$ or transport$ or transient$ or transport$); (time adj2 stamp); (user with (interface or display)); (display with (file or storage or location)).*

Below is an exemplarily search strategy that would complete this requirement by encompassing all of the features of the claims, and giving the claims the broadest reasonable interpretation. This exemplarily search strategy provides depth and breadth to cover all concepts the claims in light of the specification and/or encompass the disclosed features that may be claimed, and thereby would cover features that have not been searched.

L1 *(message or packet or frame or data or file) with (constant$3 or continu$ or transport$3 or mov$3 or travel$3) with (network or LAN or WAN)*

L2 *(message or packet or frame or data or file) with (temporar$ or briefly or momentarily) with memory with (device or router or node or switch or client or server; routing or switching or forwarding)*

L3 *(forward$4 push$4 supply provid$4) with (file content multimedia data real-time) with (without) with (sav$ stor$4) with (storage near2 (volatile medium media device RAM drive NAS)) disk disc cache CD DVD)*

L4 *(message or packet or frame or data or file) with (time with stamp)*

L5 *(request$ or command$ or issu$) with (file or storage or SAN) same (data or file or document)*

L6 *(user with (interface or display)) same (display with (file or storage or location))*

L7 *(L1 or L2) and L5*

L8 *L7 and L6*

L9 *(L1 or L2) and L4*

L10 *L7 and L3*

Note that the above list of terms and synonyms are not meant to be an exhaustive list, merely an example of various terms and synonyms that can be used to produce a more comprehensive prior art search. Nor these examples are limited only to those sets of search terms provide; each search term used should be evaluated for applicable synonyms. Additionally, searches utilizing other databases should be modified to include the above-mentioned terms and synonyms.

These text search strategies should be added to supplement the classified search performed. It should be noted that it is rare that a text search alone would be considered a complete search strategy. MPEP §904.02 A recommended search strategy is a couple of the most relevant subclasses, searched by themselves, viewing each document or combined in a text search with a few relevant terms. A larger subset of subclasses can be combined with more search terms. These strategies should (or rough equivalent thereof) be preformed on a database that includes US Patents, US PG Pubs, Foreign Patents and Non Patent Literature.

Petitioner should review all claim limitation, especially those asserted as patentable distinctions from the cited references to ensure that the search covers these concepts, and update the search and/or provide any clarification if deemed necessary.

Regarding the requirement of II 6.2, accelerated examination support document must include "for each reference cited, the accelerated examination support document must include an identification of **all the limitations in the claims** that are disclosed by the reference specifying where the limitation is disclosed in the cited reference." *See* MPEP §708.02(a)(I)(2).

The PESD has identified five references deemed most closed related to the subject matter of the claim. Applicant has piecemeal mapped the references to select claims. For example, with respect to Coates, applicant maps to the limitations of claim 1 and 17 and Kaminsky is mapped to claims 1 and 10. See AESD, filed Feb. 20, 2009, pg 6-7. Because the limitations of claims 1, 9 and 17 are very similar (only minor changes in preamble language), one would expect the mapping to be equally applicable to between those claim limitations. *See id.* at 1-6. Therefore applicant has failed to identify all of the limitations in the claims that are disclosed by the reference by specifying where the limitation is disclosed in the cited reference as made clear by the failure to map the limitations that overlap in scope between the listed claims. For an AE Support Document Sample please visit the Office's website at http://www.uspto.gov/web/patents/accelerated/

Regarding the requirement of II 6.5, accelerated examination support document must include a showing of where **each limitation** of the claims finds support under the first paragraph of 35 U.S.C. 112 in the written description of the specification. *See* MPEP §708.02(a)(I)(5). The applicant has provided a general mapping in the specification and figures for the entire claimed invention, but fails to map each limitation to the specific portion of the specification which supports that limitation under the first paragraph of 35 U.S.C. 112 in the written description of the specification. *See* AESD, filed February 20, 2009, pg 11. Therefore, the petition **fails** to meet the required conditions to be accorded special status under the accelerated examination procedure.

This requirement can be satisfied by listing verbatim all the presently filed claims (by "copy and paste") and by indicating where the instant application (and separately each one of the priority documents - if applicable) teaches each discrete/individual limitation (without bundling limitations together to the extent possible) in each one of said presently filed claims, by indicating the element number and/or the relevant page/paragraph and line numbers.

Regarding the requirement of II 6.5, "if the application claims the benefit of one or more applications under title 35, United States Code, the showing must also include where each limitation of the claims finds support under the first paragraph of 35 U.S.C. 112 in each such application in which such support exists." *See* MPEP §708.02(a)(I)(5)(ii). The applicant has

claimed priority to patent application 12/240,885, but failed to provide §112 first paragraph support of each limitation of the claim to the priority document. *See* AESD, filed February 20, 2009, pg 11. Therefore, the petition fails to meet the required conditions to be accorded special status under the accelerated examination procedure.

Petitioner is required to identify and address accordingly each and every deficiency and/or clarification requirement noted above upon filing a request for reconsideration of this decision.

DECISION

For the above-stated reasons, the petition is **dismissed**. The application will therefore be taken up by the examiner for action in its regular turn.

Petitioner is given a single opportunity to perfect the petition. Any request for reconsideration of this decision must be submitted within 1 (one) month or 30 (thirty) days, whichever is longer, (no extension of time under 37 CFR 1.136(a)) from the date of this decision in order to be considered timely. Any request for reconsideration must address the deficiencies indicated above.

Petitioner is reminded that, upon granting of the special status of the application on request for reconsideration, the application will be processed expeditiously. However, due to the dismissal of the instant petition, examination may not be completed within twelve months of the filing date of the application.

Any inquiry regarding this decision should be directed the undersigned whose telephone number is (571) 272-3902. If attempts to reach the undersigned by telephone are unsuccessful, Kim Huynh, Quality Assurance Specialist, can be reached at (571) 272-4147.

/kb/

Beatriz Prieto

Beatriz Prieto, WQAS
Technology Center 2400
Network, Multiplexing, Cable and Security

UNITED STATES PATENT AND TRADEMARK OFFICE

UNITED STATES DEPARTMENT OF COMMERCE
United States Patent and Trademark Office
Address: COMMISSIONER FOR PATENTS
P.O. Box 1450
Alexandria, Virginia 22313-1450
www.uspto.gov

APPLICATION NO.	FILING DATE	FIRST NAMED INVENTOR	ATTORNEY DOCKET NO.	CONFIRMATION NO.
12/390,161	02/20/2009	Gene Fein	084300-012102/CON	4567

35893 7590 05/21/2009
GREENBERG TRAURIG, LLP
ONE INTERNATIONAL PLACE, 20th FL
ATTN: PATENT ADMINISTRATOR
BOSTON, MA 02110

EXAMINER
CALDWELL, ANDREW T

ART UNIT	PAPER NUMBER
2442	

MAIL DATE	DELIVERY MODE
05/21/2009	PAPER

Please find below and/or attached an Office communication concerning this application or proceeding.

The time period for reply, if any, is set in the attached communication.

UNITED STATES PATENT AND TRADEMARK OFFICE

Commissioner for Patents
United States Patent and Trademark Office
P.O. Box 1450
Alexandria, VA 22313-1450
www.uspto.gov

MAILED

MAY 2 0 2009

TECHNOLOGY CENTER 2100

Bruce Neel
Greenberg Traurig, LLP
One International Place, 20th Fl
ATTN: Patent Administrator
Boston, MA 02110

In re Application of:
Fein, Gene et al.
Serial No.: 12/390,161
Filed: February 20, 2009
For: USER INTERFACE IN DATA FORWARDING NETWORK

DECISION ON PETITION TO MAKE SPECIAL (ACCELERATED EXAMINATION) UNDER 37 C.F.R. § 1.102(d) and M.P.E.P. §708.02

This is a decision on the renewed petition filed on April 04, 2009 to make the above-identified application special for accelerated examination procedure under 37 C.F.R. § 1.102(d). The original petition, submitted on February 20, 2009 was dismissed in the decision mailed on April 03, 2009.

The renew petition to make the application special is **GRANTED** as the new Search Document meets the requirements of conditions II [5.1 – 5.2]; the new Examination Support Document meets the requirements of conditions II 6.2; and the new Examination Support Document meets the requirements of conditions II 6.5 that were deficient in the original petition.

The identification of limitations is disclosed section of the support document contains a statement "the applicable disclosed portions of the pending claims are annotated with references to the corresponding figure and or paragraph, or column and line number in each reference as indicated", this phrase is being interpreted to include by inference that any feature not specifically discussed is not taught by the cited references in order to grant the petition as without the statement the record is unclear as to whether these features not discussed are not taught by the references or were mistakenly not discussed.

The application is eligible for accelerated examination and the renewed petition complies with the conditions for granting the application special status pursuant to the "Change to Practice for Petitions in Patent Applications to Make Special and for Accelerated Examination" published June 26, 2006, in the Federal Register. (71 Fed. Reg. 36323) as the original identified deficiencies for failing to comply with the requirements for the pre-examination search encompassing all of the features of the claims, and giving the claims the broadest reasonable interpretation, the statement of

patentability must provide a detailed explanation of how each of the claims are patentable and the concise statement of the utility must be of the invention as defined in each of the independent claims (reference must be made to independent claims 1, 14 and 20) have been corrected.

The prosecution of the instant application will be conducted expeditiously according to the following guidelines.

1. The application will be docketed to an examiner and taken up for action within two weeks of the date of this decision.

2. Restriction Practice:
If the examiner determines that the claims are not directed to a single invention, a telephone request to elect one single invention will be made pursuant to MPEP 812.01. As a prerequisite to the grant of this petition, the applicant has agreed to make an oral election, by telephone, without traverse. If the applicant refuses to make an election without traverse, or the examiner cannot reach the applicant after a reasonable effort, the examiner will treat the first claimed invention (invention defined by claim 1) as having being constructively elected without traverse for examination.

3. Office action:
If it is determined that, after appropriate consultation, there is a potential rejection or any other issue to be addressed, the examiner will telephone the applicant and arrange an interview to discuss and resolve the issue. An Office action, other than a Notice of Allowance and Fee(s) Due (Notice of Allowance), will not be issued unless either: 1) an interview was conducted but did not result in agreed to action that places the application in condition for allowance, or, 2) a determination is made that an interview would be unlikely to result in the application being placed in condition for allowance, and 3) an internal conference has been held to review any rejection of any claim.

4. Time for Reply:
An Office action other than a Notice of Allowance or a final Office action will set a shortened statutory period of one month or thirty days, whichever is longer, for reply with no extension of time available under 37 CFR 1.136(a). Failure to timely file a reply within this non-extendible period for reply will result in the abandonment of the application.

5. Reply by Applicant:
A timely reply to an Office action other than the Notice of Allowance must be submitted electronically via EFS or EFS-web and limited to addressing the rejections, objections and requirement made. Any amendment that attempts to: 1) add claims which would result in more than three pending independent claims or more than twenty pending total claims; 2) present claims not encompassed by the

pre-examination search or an updated accelerated examination support document; or 3) present claims that are directed a non-elected invention or an invention other than that previously claimed and examined in the application, will be treated as not fully responsive and will not be entered.

For any amendment to the claims (including any new claim) that is not encompassed by the accelerated examination support document, applicant must provide an updated accelerated examination support document that encompasses the amended or new claims at the time of filing of the amendment.

To proceed expeditiously with the examination, it is recommended that a reply with amendments made to any claim or with any new claim being added be accompanied by an updated accelerated examination support document or a statement explaining how the amended or new claim is supported by the original accelerated examination support document.

6. Information Disclosure Statement (IDS):
Any IDS filed during prosecution must be submitted electronically via EFS or EFS-web, accompanied by an updated accelerated examination support document, and be in compliance with 37 CFR 1.97 and 1.98.

7. Post-Allowance Processing:
To expedite processing of the allowed application into a patent, the applicant must: 1) pay the required fees within one month of the date of the Notice of Allowance, and 2) not file any post allowance papers not required by the Office. In no event may the issue fee be paid and accepted later than three months from the date of the Notice of Allowance.

8. After-Final and Appeal Procedures:
To expedite prosecution, after receiving the final Office action, applicant must: 1) promptly file a notice of appeal, an appeal brief and appeal fees; and 2) not request a pre-appeal brief conference.

Any amendment, affidavit or other evidence filed after final Office action must comply with applicable rules and the requirements outlined in numbered paragraphs 5 and 6 above.

On appeal, the application will proceed according to normal appeal procedures. After appeal, the application will again be treated special.

9. Proceedings Outside the Normal Examination Process:
If the application becomes involved in a proceeding that is outside the normal examination process (e.g., a secrecy order, national security review, interference

proceeding, petitions under 37 CFR 1.181, 182 or 183), the application will be treated special before and after such proceeding.

10. Final Disposition:
The twelve month goal of this accelerated examination procedure ends with a final disposition. The mailing of a final Office action, a Notice of Allowance, the filing of a Notice of Appeal, or the filing of a Request for Continued Examination (RCE) is the final disposition.

If, during prosecution, a paper is not filed electronically using EFS-web, a reply is filed but is not fully responsive, the application is involved in an appeal, or a proceeding outside normal examination process, the application will still be examined expeditiously, however, the final disposition may occur more than twelve months from the filing of the application.

Any inquiry regarding this decision should be directed to Tod Swann, Quality Assurance Specialist, at (571) 272-3612. A second point of Contact is Kim Huynh at (571)-272-4147.

Tod R Swann, WQAS 2430
Technology Center 2400

UNITED STATES PATENT AND TRADEMARK OFFICE

Commissioner for Patents
United States Patent and Trademark Office
P.O. Box 1450
Alexandria, VA 22313-1450
www.uspto.gov

MAR 1 1 2009

Sonnenschein, Nath & Rosenthal LLP
P.O. Box 061080
Wacker Drive Station, Sears Tower
Chicago, IL 60606-1080

In re application of Geoffrey McCue Application No. 12/390,281 Filed: February 20, 2009 For: CENTRIFUGAL WHEEL	: : : :	**DECISION ON PETITION TO MAKE SPECIAL FOR NEW APPLICATION UNDER 37 CFR 1.102**

This is a decision on the petition filed on March 4, 2009 to make the above-identified application special for Conservation of Energy Resources and Environmental Quality under 37 C.F.R. § 1.102(d).

The petition to make the application special is **DENIED**.

REGULATION AND PRACTICE

To be eligible for accelerated examination under 37 C.F.R. § 1.102(d) and pursuant to the "Change to Practice for Petitions in Patent Applications to Make Special and for Accelerated Examination" published in the Federal Register on June 26, 2006 (71 Fed. Reg. 36323), the following conditions are among those that must be satisfied:

1. The application must be a non-reissue utility or design application filed under 37 CFR 1.111(a);
2. The application, the petition and the required fees must be filed electronically using the USPTO's electronic filing system (EFS), or EFS-web; if not filed electronically, a statement asserting that EFS and EFS-web were not available during the normal business hours;
3. The application, at the time of filing, must be complete under 37 CFR 1.51 and in condition for examination;
4. The application must contain three or fewer independent claims and twenty or fewer total claims and the claims must be directed to a single invention.

The petition to make special for Conservation of Energy Resources and Environmental Quality under 37 C.F.R. § 1.102(d) is not acceptable at least because it was not filed with the application as required in the above Federal Register Notice of June 26, 2006. It appears that the petition was filed under the guidelines for making an application special that were in effect prior to August 25, 2006. As of August 25, 2006 the new guidelines replaced the old guidelines. Since applicant's petition was received on March 4, 2009, the petition must be considered under the new guidelines and thus is properly **DENIED**.

For the above-stated reasons, the petition is denied. The application will therefore be taken up by the examiner for action in its regular turn.

Any inquiry regarding this decision should be directed to Steven N. Meyers, Special Program Examiner, at (571) 272-6611.

Steven N. Meyers,
Quality Assurance Specialist
Technology Center 3600

Sm/sm: 3/10/09

UNITED STATES PATENT AND TRADEMARK OFFICE

Commissioner for Patents
United States Patent and Trademark Office
P.O. Box 1450
Alexandria, VA 22313-1450
www.uspto.gov

SONNENSCHEIN NATH & ROSENTHAL LLP
P.O. BOX 061080
WACKER DRIVE STATION, WILLIS TOWER
CHICAGO IL 60606-1080

MAILED

JAN 22 2010

OFFICE OF PETITIONS

In re Application of	:	
MCCUE, GEOFFREY	:	DECISION ON PETITION
Application No. 12/390,281	:	TO MAKE SPECIAL UNDER
Filed: February 20, 2009	:	THE GREEN TECHNOLOGY
Attorney Docket No. 70000714-0004	:	PILOT PROGRAM

This is a decision on the petition under 37 CFR 1.102, filed December 30, 2009, to make the above-identified application special under the pilot program for applications pertaining to Green Technologies as set forth in 74 Federal Register Notice 64666 (December 8, 2009).

The petition is **DISMISSED**.

If reconsideration of this decision is desired, a petition for reconsideration must be filed within ONE (1) MONTH OR THIRTY (30) DAYS from the mail date of this decision, whichever is longer. No extension of this time limit can be granted under 37 CFR 1.136(a) or (b). The petition for reconsideration should include an exhaustive attempt to provide the lacking item(s) noted below, since, after a decision on the petition for reconsideration, no further reconsideration or review of the matter will be undertaken by the Director.

A grantable petition to make an application special under 37 CFR 1.102 and the pilot program as set forth in 74 FR 64666 must be directed to a nonprovisional application filed under 35 USC 111(a) or be a national stage entry under 35 USC 371, exclusive of any reissue applications and be filed prior to the date of the notice, December 8, 2009.

In order to qualify for special status, the following requirements must be met. 1) The application must be classified in one of the eligible US classifications listed in section VI of the notice. 2) The application must have no more than 3 independent claims and no more than 20 total claims. 3) The application must not contain any multiple dependent claims. 4) The petition must state the basis for seeking special status, i.e., the claimed invention either: A) materially enhances the quality of the environment or B) materially contributes to: i) the discovery or development of renewable energy resources, ii) the more efficient utilization and conservation of energy resources, or iii) greenhouse gas emission reduction. 5) If the disclosure is not clear on its face that the claimed invention materially contributes under category (A) or (B), the petition must be accompanied by a statement by the applicant, assignee, or an attorney/agent registered to practice before the Office explaining how the materiality standard is met. 6) A statement that applicant will agree to make an election without traverse in a telephonic interview if a restriction

requirement is made by the examiner. 7) The petition to make special must be filed electronically. 8) The petition must be filed at least one day prior to the date that a first Office Action appears in the Patent Application Information Retrieval (PAIR) system. 9) The petition must be accompanied by a request for early publication in compliance with 37 CFR 1.219 and include the publication fee as set forth in 37 CFR 1.18(d).

The requirement for a fee for consideration of the petition to make special for applications pertaining to Green Technologies has been waived.

The petition lacks items 1 and 5 above for the reasons as explained in more detail below.

In regard to item 1, this application has been classified (USPC 301/40.2) in an area that is not one of the eligible US classifications listed in section VI of the notice. Therefore, this application is not eligible for the Pilot Program. The classification limitations are purposefully made to be narrow for the Pilot Program; however, these may be expanded based upon the success of the Pilot Program. Petitioner may file a preliminary amendment that would cause this application to be classified else where. However, while petitioner may suggest a classification (see, e.g., MPEP 708.02(a)(VII)(C)), the application will be assigned to the most appropriate classification based upon current U.S. classification guidelines. Furthermore, a petition for the Pilot Program should not be filed until and unless all of the requirements set forth in the Notice are met; i.e., a petition should not be filed for an application that is currently classified outside the eligible classifications set forth in the Notice.

In regard to item 5, it is noted that the instant petition includes a statement explaining how the instant application materially contributes to category (B). The instant invention is directed to a "Centrifugal Wheel". Petitioner's argument is that the use of the instant vehicle wheel element would decrease friction to potentially (a) improve fuel economy, and (b) lower emissions. Petitioner should note that the potential reduction in energy consumption via improved fuel economy and lower emissions depends upon how an end user might use the instant invention. As stated in the notice, the materiality standard does not permit an applicant to speculate as to how a hypothetical end-user might specially apply the invention in a manner than could materially contribute to category (A) or (B). *Also see MPEP § 708.02 (V and VI).* Accordingly, it is unclear as to how the claimed invention would materially contribute to category (A) or (B).

It is noted that on page 3 of the "PETITION TO MAKE SPECIAL UNDER PILOT PROGRAM FOR GREEN TECHNOLOGIES INCLUDING GREENHOUSE GAS REDUCTION", petitioner requests early publication in compliance with 37 CFR 1.219. However, the publication fee under 37 CFR 1.18(d) does not accompany the petition as is required by section I, paragraph (7) of the Notice. Since petitioner authorizes the charging of "any further fees . . . in connection with the filing of this Petition", the $300.00 early publication fee under 37 CFR 1.18(d) has been charged to Deposit Account No. 19-3140.

Further correspondence with respect to this matter should be addressed as follows:

By Mail: Mail Stop PETITION
Commissioner for Patents
P. O. Box 1450
Alexandria, VA 22313-1450

By hand: U. S. Patent and Trademark Office
Customer Service Window, Mail Stop Petitions
Randolph Building
401 Dulany Street
Alexandria, VA 22314

By FAX: (571) 273-8300

Telephone inquiries concerning this decision should be directed to Gay Ann Spahn at 571-272-8011.

All other inquiries concerning either the examination or status of the application should be directed to the Technology Center.

The application is being forwarded to the Technology Center Art Unit 3617 for action in its regular turn.

Ramesh Krishnamurthy

Ramesh Krishnamurthy
Petitions Examiner
Office of Petitions

UNITED STATES PATENT AND TRADEMARK OFFICE

UNITED STATES DEPARTMENT OF COMMERCE
United States Patent and Trademark Office
Address: COMMISSIONER FOR PATENTS
P.O. Box 1450
Alexandria, Virginia 22313-1450
www.uspto.gov

APPLICATION NO.	FILING DATE	FIRST NAMED INVENTOR	ATTORNEY DOCKET NO.	CONFIRMATION NO.
12/390,419	02/21/2009	Arturo A. Rodriguez	60374.0053USC4/A-12722	5075

7590 12/30/2009

MERCHANT & GOULD
SCIENTIFIC ATLANTA, A CISCO COMPANY
P.O. BOX 2903
MINNEAPOLIS, MN 55402-0903

EXAMINER
KOENIG, ANDREW Y

ART UNIT	PAPER NUMBER
2423	

MAIL DATE	DELIVERY MODE
12/30/2009	PAPER

DECISION GRANTING PETITION UNDER 37 CFR 1.138(d)

The declaration of express abandonment is recognized

This is in response to the petition under 37 CFR 1.138(d), requesting for a refund of any previously paid search fee and excess claims fee in the above-identified application.

The petition is granted.

The express abandonment is recognized. Any previously paid search fee and excess claims fee are hereby refunded.

Telephone inquiries should be directed to the Office of Data Management at (571) 272-4200.

Nimi Farmer

Patent Publication Branch
Office of Data Management

Adjustment date: 12/31/2009 NFARMER
03/04/2009 RJOLTUP 00000000 [illegible]
02 FC:1111 540.00 CR

FORM PET651G (Rev. 08/07)

UNITED STATES PATENT AND TRADEMARK OFFICE

UNITED STATES DEPARTMENT OF COMMERCE
United States Patent and Trademark Office
Address: COMMISSIONER FOR PATENTS
P.O. Box 1450
Alexandria, Virginia 22313-1450
www.uspto.gov

APPLICATION NO.	FILING DATE	FIRST NAMED INVENTOR	ATTORNEY DOCKET NO.	CONFIRMATION NO.
12/390,421	02/21/2009	Arturo A. Rodriguez	60374.0053USC6	5077

7590 12/30/2009
MERCHANT & GOULD
SCIENTIFIC ATLANTA, A CISCO COMPANY
P.O. BOX 2903
MINNEAPOLIS, MN 55402-0903

EXAMINER
KOENIG, ANDREW Y

ART UNIT	PAPER NUMBER
2423	

MAIL DATE	DELIVERY MODE
12/30/2009	PAPER

DECISION GRANTING PETITION UNDER 37 CFR 1.138(d)

The declaration of express abandonment is recognized

This is in response to the petition under 37 CFR 1.138(d), requesting for a refund of any previously paid search fee and excess claims fee in the above-identified application.

The petition is granted.

The express abandonment is recognized. Any previously paid search fee and excess claims fee are hereby refunded.

Telephone inquiries should be directed to the Office of Data Management at (571) 272-4200.

Nimi Farmer

Patent Publication Branch
Office of Data Management

Adjustment date: 12/31/2009 NFARMER
03/04/2009 AGOITOM 00000036 190761 12390421
02 FC:1111 540.00 CR

FORM PET651G (Rev. 08/07)

UNITED STATES PATENT AND TRADEMARK OFFICE

UNITED STATES DEPARTMENT OF COMMERCE
United States Patent and Trademark Office
Address: COMMISSIONER FOR PATENTS
P.O. Box 1450
Alexandria, Virginia 22313-1450
www.uspto.gov

APPLICATION NO.	FILING DATE	FIRST NAMED INVENTOR	ATTORNEY DOCKET NO.	CONFIRMATION NO.
12/390,449	02/21/2009	Ajith N. Nair	60374.0007USC9/A-12757	5139

7590 12/21/2009

MERCHANT & GOULD
SCIENTIFIC ATLANTA, A CISCO COMPANY
P.O. BOX 2903
MINNEAPOLIS, MN 55402-0903

EXAMINER
BANKS HAROLD, MARSHA DENISE

ART UNIT	PAPER NUMBER
2621	

MAIL DATE	DELIVERY MODE
12/21/2009	PAPER

DECISION GRANTING PETITION UNDER 37 CFR 1.138(d)

The declaration of express abandonment is recognized

This is in response to the petition under 37 CFR 1.138(d), requesting for a refund of any previously paid search fee and excess claims fee in the above-identified application.

The petition is granted.

The express abandonment is recognized. Any previously paid search fee and excess claims fee are hereby refunded.

Telephone inquiries should be directed to the Office of Data Management at (571) 272-4200.

Patent Publication Branch
Office of Data Management

Adjustment date: 12/24/2009 NFARMER
04/22/2009 VVAN11 00000005 190761 12390449
02 FC:1111 540.00 CR

FORM PET651G (Rev. 08/07)

UNITED STATES PATENT AND TRADEMARK OFFICE

UNITED STATES DEPARTMENT OF COMMERCE
United States Patent and Trademark Office
Address: COMMISSIONER FOR PATENTS
P.O. Box 1450
Alexandria, Virginia 22313-1450
www.uspto.gov

APPLICATION NO.	FILING DATE	FIRST NAMED INVENTOR	ATTORNEY DOCKET NO.	CONFIRMATION NO.
12/390,451	02/21/2009	Arturo A. Rodriguez	60374.0105USC1/A-12758	5143

7590 12/21/2009

MERCHANT & GOULD
SCIENTIFIC ATLANTA, A CISCO COMPANY
P.O. BOX 2903
MINNEAPOLIS, MN 55402-0903

EXAMINER

ART UNIT	PAPER NUMBER
2621	

MAIL DATE	DELIVERY MODE
12/21/2009	PAPER

DECISION GRANTING PETITION UNDER 37 CFR 1.138(d)

The declaration of express abandonment is recognized

This is in response to the petition under 37 CFR 1.138(d), requesting for a refund of any previously paid search fee and excess claims fee in the above-identified application.

The petition is granted.

The express abandonment is recognized. Any previously paid search fee and excess claims fee are hereby refunded.

Telephone inquiries should be directed to the Office of Data Management at (571) 272-4200.

Mimi Harmes

Patent Publication Branch
Office of Data Management

Adjustment date: 12/24/2009 NFARMER
04/27/2009 HNGUYEN 00000006 190761 12390451
02 FC:1111 540.00 CR

FORM PET651G (Rev. 08/07)

UNITED STATES PATENT AND TRADEMARK OFFICE

UNITED STATES DEPARTMENT OF COMMERCE
United States Patent and Trademark Office
Address: COMMISSIONER FOR PATENTS
P.O. Box 1450
Alexandria, Virginia 22313-1450
www.uspto.gov

APPLICATION NO.	FILING DATE	FIRST NAMED INVENTOR	ATTORNEY DOCKET NO.	CONFIRMATION NO.
12/390,452	02/21/2009	Arturo A. Rodriguez	60374.0105USC2/A-12759	5145

7590 12/21/2009

MERCHANT & GOULD
SCIENTIFIC ATLANTA, A CISCO COMPANY
P.O. BOX 2903
MINNEAPOLIS, MN 55402-0903

EXAMINER

ART UNIT	PAPER NUMBER
2621	

MAIL DATE	DELIVERY MODE
12/21/2009	PAPER

DECISION GRANTING PETITION UNDER 37 CFR 1.138(d)

The declaration of express abandonment is recognized

This is in response to the petition under 37 CFR 1.138(d), requesting for a refund of any previously paid search fee and excess claims fee in the above-identified application.

The petition is granted.

The express abandonment is recognized. Any previously paid search fee and excess claims fee are hereby refunded.

Telephone inquiries should be directed to the Office of Data Management at (571) 272-4200.

Mimi Farmer

Patent Publication Branch
Office of Data Management

Adjustment date: 12/24/2009 MFARMER
04/27/2009 MNGUYEN 00000007 190761 12390452
02 FC:1111 540.00 CR

FORM PET651G (Rev. 08/07)

UNITED STATES PATENT AND TRADEMARK OFFICE

UNITED STATES DEPARTMENT OF COMMERCE
United States Patent and Trademark Office
Address: COMMISSIONER FOR PATENTS
P.O. Box 1450
Alexandria, Virginia 22313-1450
www.uspto.gov

APPLICATION NO.	FILING DATE	FIRST NAMED INVENTOR	ATTORNEY DOCKET NO.	CONFIRMATION NO.
12/390,454	02/21/2009	Arturo A. Rodriguez	60374.0105USC3A-12760	5147

7590 12/21/2009

MERCHANT & GOULD
SCIENTIFIC ATLANTA, A CISCO COMPANY
P.O. BOX 2903
MINNEAPOLIS, MN 55402-0903

EXAMINER

ART UNIT	PAPER NUMBER
2621	

MAIL DATE	DELIVERY MODE
12/21/2009	PAPER

DECISION GRANTING PETITION UNDER 37 CFR 1.138(d)

The declaration of express abandonment is recognized

This is in response to the petition under 37 CFR 1.138(d), requesting for a refund of any previously paid search fee and excess claims fee in the above-identified application.

The petition is granted.

The express abandonment is recognized. Any previously paid search fee and excess claims fee are hereby refunded.

Telephone inquiries should be directed to the Office of Data Management at (571) 272-4200.

Patent Publication Branch
Office of Data Management

Adjustment date: 12/24/2009 NFARMER
04/24/2009 ANGUYEN 00000017 190761 12390454
02 FC:1111 540.00 CR

FORM PET651G (Rev. 08/07)

UNITED STATES PATENT AND TRADEMARK OFFICE

UNITED STATES DEPARTMENT OF COMMERCE
United States Patent and Trademark Office
Address: COMMISSIONER FOR PATENTS
P.O. Box 1450
Alexandria, Virginia 22313-1450
www.uspto.gov

APPLICATION NO.	FILING DATE	FIRST NAMED INVENTOR	ATTORNEY DOCKET NO.	CONFIRMATION NO.
12/390,455	02/21/2009	Arturo A. Rodriguez	60374.0105USC4/A-12761	5148

7590 12/21/2009

MERCHANT & GOULD
SCIENTIFIC ATLANTA, A CISCO COMPANY
P.O. BOX 2903
MINNEAPOLIS, MN 55402-0903

EXAMINER

ART UNIT	PAPER NUMBER
2621	

MAIL DATE	DELIVERY MODE
12/21/2009	PAPER

DECISION GRANTING PETITION UNDER 37 CFR 1.138(d)

The declaration of express abandonment is recognized

This is in response to the petition under 37 CFR 1.138(d), requesting for a refund of any previously paid search fee and excess claims fee in the above-identified application.

The petition is granted.

The express abandonment is recognized. Any previously paid search fee and excess claims fee are hereby refunded.

Telephone inquiries should be directed to the Office of Data Management at (571) 272-4200.

Nimi Farmer

Patent Publication Branch
Office of Data Management

Adjustment date: 12/24/2009 NFARMER
06/02/2009 MTEKLEMI 00000015 190761 12390455
02 FC:1111 540.00 CR

FORM PET651G (Rev. 08/07)

UNITED STATES PATENT AND TRADEMARK OFFICE

UNITED STATES DEPARTMENT OF COMMERCE
United States Patent and Trademark Office
Address: COMMISSIONER FOR PATENTS
P.O. Box 1450
Alexandria, Virginia 22313-1450
www.uspto.gov

APPLICATION NO.	FILING DATE	FIRST NAMED INVENTOR	ATTORNEY DOCKET NO.	CONFIRMATION NO.
12/390,456	02/21/2009	Arturo A. Rodriguez	60374.0105USC5/A-12762	5149

7590 12/29/2009

MERCHANT & GOULD
SCIENTIFIC ATLANTA, A CISCO COMPANY
P.O. BOX 2903
MINNEAPOLIS, MN 55402-0903

EXAMINER

ART UNIT	PAPER NUMBER
2621	

MAIL DATE	DELIVERY MODE
12/29/2009	PAPER

DECISION GRANTING PETITION UNDER 37 CFR 1.138(d)

The declaration of express abandonment is recognized

This is in response to the petition under 37 CFR 1.138(d), requesting for a refund of any previously paid search fee and excess claims fee in the above-identified application.

The petition is granted.

The express abandonment is recognized. Any previously paid search fee and excess claims fee are hereby refunded.

Telephone inquiries should be directed to the Office of Data Management at (571) 272-4200.

Nimi Farmer

Patent Publication Branch
Office of Data Management

Adjustment date: 12/29/2009 NFARMER
04/27/2009 MTEKLEMI 00000033 190761 12390456
02 FC:1111 540.00 CR

FORM PET651G (Rev. 08/07)

UNITED STATES PATENT AND TRADEMARK OFFICE

UNITED STATES DEPARTMENT OF COMMERCE
United States Patent and Trademark Office
Address: COMMISSIONER FOR PATENTS
P.O. Box 1450
Alexandria, Virginia 22313-1450
www.uspto.gov

APPLICATION NO.	FILING DATE	FIRST NAMED INVENTOR	ATTORNEY DOCKET NO.	CONFIRMATION NO.
12/390,457	02/21/2009	Arturo A. Rodriguez	60374.0105USC6/A-12763	5150

7590 12/29/2009

MERCHANT & GOULD
SCIENTIFIC ATLANTA, A CISCO COMPANY
P.O. BOX 2903
MINNEAPOLIS, MN 55402-0903

EXAMINER

ART UNIT	PAPER NUMBER
2621	

MAIL DATE	DELIVERY MODE
12/29/2009	PAPER

DECISION GRANTING PETITION UNDER 37 CFR 1.138(d)

The declaration of express abandonment is recognized

This is in response to the petition under 37 CFR 1.138(d), requesting for a refund of any previously paid search fee and excess claims fee in the above-identified application.

The petition is granted.

The express abandonment is recognized. Any previously paid search fee and excess claims fee are hereby refunded.

Telephone inquiries should be directed to the Office of Data Management at (571) 272-4200.

Mimi Farmer

Patent Publication Branch
Office of Data Management

Adjustment date: 12/29/2009 NFARMER
04/24/2009 MNGUYEN 00003016 190761 12390457
02 FC:1111 540.00 CR

FORM PET651G (Rev. 08/07)

UNITED STATES PATENT AND TRADEMARK OFFICE

UNITED STATES DEPARTMENT OF COMMERCE
United States Patent and Trademark Office
Address: COMMISSIONER FOR PATENTS
P.O. Box 1450
Alexandria, Virginia 22313-1450
www.uspto.gov

APPLICATION NO.	FILING DATE	FIRST NAMED INVENTOR	ATTORNEY DOCKET NO.	CONFIRMATION NO.
12/390,462	02/21/2009	Arturo A. Rodriguez	60374.0125USC3/A-12765	5159

7590 12/29/2009

MERCHANT & GOULD
SCIENTIFIC ATLANTA, A CISCO COMPANY
P.O. BOX 2903
MINNEAPOLIS, MN 55402-0903

EXAMINER

ART UNIT	PAPER NUMBER
2621	

MAIL DATE	DELIVERY MODE
12/29/2009	PAPER

DECISION GRANTING PETITION UNDER 37 CFR 1.138(d)

The declaration of express abandonment is recognized.

This is in response to the petition under 37 CFR 1.138(d), requesting for a refund of any previously paid search fee and excess claims fee in the above-identified application.

The petition is granted.

The express abandonment is recognized. Any previously paid search fee and excess claims fee are hereby refunded.

Telephone inquiries should be directed to the Office of Data Management at (571) 272-4200.

Tomi Farmer

Patent Publication Branch
Office of Data Management

Adjustment date: 12/29/2009 NFARMER
04/14/2009 VVAN11 00000033 190761 12390462
32 FC:1111 540.00 CR

FORM PET651G (Rev. 08/07)

UNITED STATES PATENT AND TRADEMARK OFFICE

UNITED STATES DEPARTMENT OF COMMERCE
United States Patent and Trademark Office
Address: COMMISSIONER FOR PATENTS
P.O. Box 1450
Alexandria, Virginia 22313-1450
www.uspto.gov

APPLICATION NO.	FILING DATE	FIRST NAMED INVENTOR	ATTORNEY DOCKET NO.	CONFIRMATION NO.
12/390,467	02/21/2009	Arturo A. Rodriguez	60374.0125USC7/A-12769	5164

7590 12/29/2009

MERCHANT & GOULD
SCIENTIFIC ATLANTA, A CISCO COMPANY
P.O. BOX 2903
MINNEAPOLIS, MN 55402-0903

EXAMINER

ART UNIT	PAPER NUMBER
2621	

MAIL DATE	DELIVERY MODE
12/29/2009	PAPER

DECISION GRANTING PETITION UNDER 37 CFR 1.138(d)

The declaration of express abandonment is recognized

This is in response to the petition under 37 CFR 1.138(d), requesting for a refund of any previously paid search fee and excess claims fee in the above-identified application.

The petition is granted.

The express abandonment is recognized. Any previously paid search fee and excess claims fee are hereby refunded.

Telephone inquiries should be directed to the Office of Data Management at (571) 272-4200.

Patent Publication Branch
Office of Data Management

Adjustment date: 12/29/2009 NFARMER
04/27/2003 VVARIL 00000014 190751 12390467
02 FC:1111 540.00 CR

FORM PET651G (Rev. 08/07)

UNITED STATES PATENT AND TRADEMARK OFFICE

UNITED STATES DEPARTMENT OF COMMERCE
United States Patent and Trademark Office
Address: COMMISSIONER FOR PATENTS
P.O. Box 1450
Alexandria, Virginia 22313-1450
www.uspto.gov

APPLICATION NO.	FILING DATE	FIRST NAMED INVENTOR	ATTORNEY DOCKET NO.	CONFIRMATION NO.
12/390,468	02/21/2009	Arturo A. Rodriguez	60374.0125USC8/A-12770	5165

7590 12/29/2009

MERCHANT & GOULD
SCIENTIFIC ATLANTA, A CISCO COMPANY
P.O. BOX 2903
MINNEAPOLIS, MN 55402-0903

EXAMINER

ART UNIT	PAPER NUMBER
2621	

MAIL DATE	DELIVERY MODE
12/29/2009	PAPER

DECISION GRANTING PETITION UNDER 37 CFR 1.138(d)

The declaration of express abandonment is recognized

This is in response to the petition under 37 CFR 1.138(d), requesting for a refund of any previously paid search fee and excess claims fee in the above-identified application.

The petition is granted.

The express abandonment is recognized. Any previously paid search fee and excess claims fee are hereby refunded.

Telephone inquiries should be directed to the Office of Data Management at (571) 272-4200.

Mimi Farmer

Patent Publication Branch
Office of Data Management

Adjustment date: 12/29/2009 NFARMER
04/27/2005 VVANH1 00000003 190767 12390468
02 FC:1111 540.00 CR

FORM PET651G (Rev. 08/07)

UNITED STATES PATENT AND TRADEMARK OFFICE

UNITED STATES DEPARTMENT OF COMMERCE
United States Patent and Trademark Office
Address: COMMISSIONER FOR PATENTS
P.O. Box 1450
Alexandria, Virginia 22313-1450
www.uspto.gov

APPLICATION NO.	FILING DATE	FIRST NAMED INVENTOR	ATTORNEY DOCKET NO.	CONFIRMATION NO.
12/390,469	02/21/2009	Arturo A. Rodriguez	60374.0125USC9/A-12771	5166

7590 12/29/2009

MERCHANT & GOULD
SCIENTIFIC ATLANTA, A CISCO COMPANY
P.O. BOX 2903
MINNEAPOLIS, MN 55402-0903

EXAMINER

ART UNIT	PAPER NUMBER
2621	

MAIL DATE	DELIVERY MODE
12/29/2009	PAPER

DECISION GRANTING PETITION UNDER 37 CFR 1.138(d)

The declaration of express abandonment is recognized

This is in response to the petition under 37 CFR 1.138(d), requesting for a refund of any previously paid search fee and excess claims fee in the above-identified application.

The petition is granted.

The express abandonment is recognized. Any previously paid search fee and excess claims fee are hereby refunded.

Telephone inquiries should be directed to the Office of Data Management at (571) 272-4200.

Nimi Farmer

Patent Publication Branch
Office of Data Management

Adjustment date: 12/23/2009 KFARMER
04/24/2009 VVANH1 02000024 190751 12390469
02 FC:1111 540.00 CR

FORM PET651G (Rev. 08/07)

UNITED STATES PATENT AND TRADEMARK OFFICE

UNITED STATES DEPARTMENT OF COMMERCE
United States Patent and Trademark Office
Address: COMMISSIONER FOR PATENTS
P.O. Box 1450
Alexandria, Virginia 22313-1450
www.uspto.gov

APPLICATION NO.	FILING DATE	FIRST NAMED INVENTOR	ATTORNEY DOCKET NO.	CONFIRMATION NO.
12/390,470	02/22/2009	Arturo A. Rodriguez	60374.0125US10/A-12772	5167

7590 12/29/2009

MERCHANT & GOULD
SCIENTIFIC ATLANTA, A CISCO COMPANY
P.O. BOX 2903
MINNEAPOLIS, MN 55402-0903

EXAMINER

ART UNIT	PAPER NUMBER
2621	

MAIL DATE	DELIVERY MODE
12/29/2009	PAPER

DECISION GRANTING PETITION UNDER 37 CFR 1.138(d).

The declaration of express abandonment is recognized

This is in response to the petition under 37 CFR 1.138(d), requesting for a refund of any previously paid search fee and excess claims fee in the above-identified application.

The petition is granted.

The express abandonment is recognized. Any previously paid search fee and excess claims fee are hereby refunded.

Telephone inquiries should be directed to the Office of Data Management at (571) 272-4200.

Tim Farmer

Patent Publication Branch
Office of Data Management

Adjustment date: 12/29/2009 NFARMER
04/24/2009 VVAN11 00000032 190761 12390470
02 FC:1111 540.00 CR

FORM PET651G (Rev. 08/07)

UNITED STATES PATENT AND TRADEMARK OFFICE

UNITED STATES DEPARTMENT OF COMMERCE
United States Patent and Trademark Office
Address: COMMISSIONER FOR PATENTS
P.O. Box 1450
Alexandria, Virginia 22313-1450
www.uspto.gov

APPLICATION NO.	FILING DATE	FIRST NAMED INVENTOR	ATTORNEY DOCKET NO.	CONFIRMATION NO.
12/390,473	02/22/2009	Jan Kehler	71043-US-NP	5177

7590 10/19/2009
LUNDBECK RESEARCH USA, INC.
ATTENTION: STEPHEN G. KALINCHAK, LEGAL
215 COLLEGE ROAD
PARAMUS, NJ 07652

EXAMINER
MARSCHEL, ARDIN H

ART UNIT	PAPER NUMBER
1614	

MAIL DATE	DELIVERY MODE
10/19/2009	PAPER

DECISION GRANTING PETITION UNDER 37 CFR 1.138(d)

The declaration of express abandonment is recognized

This is in response to the petition under 37 CFR 1.138(d), requesting for a refund of any previously paid search fee and excess claims fee in the above-identified application.

The petition is granted.

The express abandonment is recognized. Any previously paid search fee and excess claims fee are hereby refunded.

Telephone inquiries should be directed to the Office of Data Management at (571) 272-4200.

Tim Farmer

Patent Publication Branch
Office of Data Management

Adjustment date: 10/19/2009 NFARMER
02/23/2009 INTEFSW 00005133 503201 12390473
02 FC:1111 540.00 CR

FORM PET651G (Rev. 08/07)

UNITED STATES PATENT AND TRADEMARK OFFICE

UNITED STATES DEPARTMENT OF COMMERCE
United States Patent and Trademark Office
Address: COMMISSIONER FOR PATENTS
P.O. Box 1450
Alexandria, Virginia 22313-1450
www.uspto.gov

APPLICATION NO.	FILING DATE	FIRST NAMED INVENTOR	ATTORNEY DOCKET NO.	CONFIRMATION NO.
12/390,566	02/23/2009	Hiroki KITAYAMA	36856.1793	5370

7590 06/11/2010
MURATA MANUFACTURING COMPANY, LTD.
C/O KEATING & BENNETT, LLP
1800 Alexander Bell Drive
SUITE 200
Reston, VA 20191

EXAMINER
SEMENENKO, YURIY

ART UNIT	PAPER NUMBER
2841	

NOTIFICATION DATE	DELIVERY MODE
06/11/2010	ELECTRONIC

DECISION GRANTING PETITION UNDER 37 CFR 1.138(d)

The declaration of express abandonment is recognized

This is in response to the petition under 37 CFR 1.138(d), requesting for a refund of any previously paid search fee and excess claims fee in the above-identified application.

The petition is granted.

The express abandonment is recognized. Any previously paid search fee and excess claims fee are hereby refunded.

Telephone inquiries should be directed to the Office of Data Management at (571) 272-4200.

Patent Publication Branch
Office of Data Management

Adjustment date: 06/14/2010 NFARMER
02/23/2009 INTEFSW 00000555 12390566
02 FC:1111 -540.00 OP

FORM PET651G (Rev. 08/07)

UNITED STATES PATENT AND TRADEMARK OFFICE

UNITED STATES DEPARTMENT OF COMMERCE
United States Patent and Trademark Office
Address: COMMISSIONER FOR PATENTS
P.O. Box 1450
Alexandria, Virginia 22313-1450
www.uspto.gov

Gifford, Krass, Sprinkle,
Anderson & Citkowski, P.C.
2701 Troy Center Drive, Suite 330
Post Office Box 7021
Troy, MI 48007-7021

Mail Date: 04/21/2010

Applicant	: Osamu Fukawatase	: DECISION ON REQUEST FOR
Patent Number	: 7628422	: RECALCULATION of PATENT
Issue Date	: 12/08/2009	: TERM ADJUSTMENT IN VIEW
Appliction No	: 12/390,571	: OF WYETH AND NOTICE OF INTENT TO
Filed	: 02/23/2009	: ISSUE CERTIFICATE OF CORRECTION
		:

The Request for Recalculation is **GRANTED** to the extent indicated.

The patent term adjustment has been determined to be **0** days. The USPTO will *sua sponte* issue a certificate of correction reflecting the amount of PTA days determined by the recalculation.

Prior to the issuance of the certificate of correction, the USPTO will afford patentee an opportunity to be heard and request reconsideration. Accordingly, patentee has **one month or thirty (30) days**, whichever is longer, to file a request for reconsideration of this patent term adjustment calculation. See 35 U.S.C. 154(b)(3)(B)(ii) and 37 CFR 1.322(a)(4). No extensions of time will be granted under 37 CFR 1.136.

Patentee should use document code PET.OP if electronically filing a request for reconsideration of this patent term adjustment calculation. The patentee must also include the information required by 37 CFR 1.705(b)(2) and the fee required by 37 CFR 1.18(e). If patentee does not file a timely request for reconsideration of this patent term adjustment calculation including the information required by 37 CFR 1.705(b)(2) and the fee required by 37 CFR 1.18(e), the USPTO will issue a certificate of correction reflecting the PTA determination noted above.

Patentee should be aware that in order to preserve the right to review in the United States District Court for the District of Columbia of the USPTO patent term adjustment determination, patentee must ensure that he or she also take the steps required under 35 U.S.C. 154(b)(4)(A) in a timely manner. Nothing in the request for recalculation should be construed as providing an alternative time frame for commencing a civil action under 35 U.S.C. 154(b)(4)(A).

Any questions concerning this decision should be directed to the Office of Patent Legal Administration at 571-272-7702.

UNITED STATES PATENT AND TRADEMARK OFFICE

Commissioner for Patents
United States Patent and Trademark Office
P.O. Box 1450
Alexandria, VA 22313-1450
www.uspto.gov

GIFFORD, KRASS, SPRINKLE,ANDERSON & CITKOWSKI, P.C
PO BOX 7021
TROY MI 48007-7021

COPY MAILED

APR 27 2009

OFFICE OF PETITIONS

In re Application of	:	
Dennis Guile, et al.	:	
Application No. 12/390,655	:	DECISION ON PETITION
Filed: February 23, 2009	:	TO MAKE SPECIAL UNDER
Attorney Docket No. GUI-10002/08	:	37 CFR 1.102(c)(1)
	:	

This is a decision on the petition under 37 CFR 1.102(c)(1), filed February 23, 2009, to make the above-identified application special based on applicant's age as set forth in M.P.E.P. § 708.02, Section IV.

The petition is **GRANTED**.

A grantable petition to make an application special under 37 CFR 1.102(c)(1) and MPEP § 708.02, Section IV: Applicant's Age must be accompanied by evidence showing that at least one of the applicants is 65 years of age, or more, such as a birth certificate or a statement by applicant. No fee is required

The instant petition includes a statement from the applicant Louis P. Knapp declaring that he is 65 years of age or older. Accordingly, the above-identified application has been accorded "special" status.

Telephone inquiries concerning this decision should be directed to Terri Williams at 571-272-2991.

All other inquiries concerning either the examination or status of the application should be directed to the Technology Center.

The application is being forwarded to the Technology Center Art Unit 3723 for action on the merits commensurate with this decision.

Terri Williams

Terri Williams
Petitions Examiner
Office of Petitions

UNITED STATES PATENT AND TRADEMARK OFFICE

Commissioner for Patents
United States Patent and Trademark Office
P.O. Box 1450
Alexandria, VA 22313-1450
www.uspto.gov

EDWARDS ANGELL PALMER & DODGE LLP
PO BOX 55874
BOSTON, MA 02205

COPY MAILED

NOV 0 5 2009

OFFICE OF PETITIONS

In re Application of Weissman et al. :
Application No. 12/390,692 :
Filing Date: February 23, 2009 :
Attorney Docket No. 57898DIV1(47992) :

Decision on Petition

This is a decision in response to the petition filed May 11, 2009, which requests the application be accorded a filing date of February 23, 2009, and requests entry of the drawings filed May 11, 2009.

The petition is **granted** to the extent indicated herein.

Procedural History

The application papers filed February 23, 2009, were not accompanied by drawings even though the specification referenced drawings.

On March 12, 2009, the Office of Patent Application Processing mailed a "Notice of Incomplete Nonprovisional Application." The Notice stated drawings did not appear to be part of the application as filed and that a filing date would be accorded upon the submission of drawings.

On May 11, 2009, petitioner filed the instant petition, a petition fee of $400, an amendment, and drawings.

The petition states, "The drawings ... were inadvertently omitted from the Application." The petition also states the missing drawings were previously filed as part of priority applications.

Discussion

Although the petition is labeled as a petition under 37 CFR 1.53(b), the petition appears to actually seek relief pursuant to 37 CFR 1.57(a) which states,

> Subject to the conditions and requirements of this paragraph, if all or a portion of the specification or drawing(s) is inadvertently omitted from an application, but the application contains a claim under § 1.55 for priority of a prior-filed foreign application, or a claim under § 1.78 for the benefit of a prior-filed provisional, nonprovisional, or international application, that was present on the filing date of the application, and the

> inadvertently omitted portion of the specification or drawing(s) is completely contained in the prior-filed application, the claim under § 1.55 or § 1.78 shall also be considered an incorporation by reference of the prior-filed application as to the inadvertently omitted portion of the specification or drawing(s).

One must always file an amendment in order to add material pursuant to 37 CFR 1.57(a). However, a petition under 37 CFR 1.57 and the $400 fee is only necessary if the application is not entitled to a filing date absent the missing material.[1]

The Office has chosen to initially treat the petition as a petition under 37 CFR 1.53(e) in order to determine if the application should have been accorded a filing date without the drawings. If the application should have been accorded a filing date without the drawings, then a petition under 37 CFR 1.57 is unnecessary and the $400 fee is refundable.

A review of the application papers filed February 23, 2009, indicates the papers included at least one composition claim. MPEP 601.01(f) states,

> It has been USPTO practice to treat an application that contains at least one process or method claim as an application for which a drawing is not necessary for an understanding of the invention under 35 U.S.C. 113 (first sentence). The same practice has been followed in composition applications.

Pursuant to MPEP 601.01(f), the Office should not have required drawings in order to accord the application a filing date. Instead, the Office should have granted the application a filing date of February 23, 2009, and mailed a Notice of Omitted Items instead of a Notice of Incomplete Nonprovisional Application. As stated in the section titled, "Application Entitled to a Filing Date" in MPEP 601.01(g), applicant may submit an *amendment* to include the inadvertently omitted portion of the drawing(s) pursuant to 37 CFR 1.57(a):

> [If the] application was filed on or after September 21, 2004, and contains a claim under 37 CFR 1.55 for priority of a prior-filed foreign application, or a claim under 37 CFR 1.78 for the benefit of a prior-filed provisional, nonprovisional, or international application that was present on the filing date of the application, and the omitted portion of the drawing(s) was inadvertently omitted from the application and is completely contained in the prior-filed application.

Since the application is entitled to a filing date without the drawings, an amendment pursuant to 37 CFR 1.57(a) does not need to be accompanied by a petition under 37 CFR 1.57 and the petition fee of $400 has been refunded to petitioner's deposit account.

Please note an amendment pursuant to 37 CFR 1.57(a) must comply with the requirements of 37 CFR 1.121. For example, per 37 CFR 1.121(d), any new drawings added to an application must include in the top margin the label "New Sheet." The Office notes the drawings filed May 11,

---

[1] 37 CFR 1.57(a)(3) states, "If an application is not otherwise entitled to a filing date under § 1.53(b), the amendment must be by way of a petition pursuant to this paragraph accompanied by the fee set forth in § 1.17(f)."

2009, include in the top margin the label "Replacement Sheet." Petitioner may wish to review the amendment and file a new preliminary amendment if petitioner determines the May 11, 2009 amendment fails to comply with the requirements set forth in 37 CFR 1.57(a) and/or 37 CFR 1.121.

Pursuant to this decision, the application will be referred to the Office of Patent Application Processing for:

- **correction of the filing date to February 23, 2009**;
- **for indication in Office records, as appropriate, that "0" sheets of drawings were present on filing** and
- **for issuance of a filing receipt**.

Entry of the amendment filed May 11, 2009, will be determined by the examiner in due course.

Telephone inquiries regarding this communication should be directed to Petitions Attorney Steven Brantley at (571) 272-3203.

Anthony Knight
Supervisory Petitions Examiner
Office of Petitions

UNITED STATES PATENT AND TRADEMARK OFFICE

Commissioner for Patents
United States Patent and Trademark Office
P.O. Box 1450
Alexandria, VA 22313-1450
www.uspto.gov

CLEMENTS BERNARD PLLC
1901 ROXBOROUGH ROAD
SUITE 250
CHARLOTTE NC 28211

MAILED

JUL 02 2010

OFFICE OF PETITIONS

In re Application of	:	
REEVES, Eric	:	
Application No. 12/390,886	:	DECISION ON PETITION
Filed: February 23, 2009	:	TO WITHDRAW
Attorney Docket No. **4844**	:	FROM RECORD
	:	

This is a decision on the Request to Withdraw as attorney or agent of record under 37 C.F.R. § 1.36(b), filed June 10, 2010.

The request is **APPROVED**.

A grantable request to withdraw as attorney/agent of record must be signed by every attorney/agent seeking to withdraw or contain a clear indication that one attorney is signing on behalf of another/others. The Office requires the practitioner(s) requesting withdrawal to certify that he, she, or they have: (1) given reasonable notice to the client, prior to the expiration of the response period, that the practitioner(s) intends to withdraw from employment; (2) delivered to the client or a duly authorized representative of the client all papers and property (including funds) to which the client is entitled; and (3) notified the client of any responses that may be due and the time frame within which the client must respond, pursuant 37 CFR 10.40(c).

The request was signed by Russell M. Racine on behalf of all attorneys of record who are associated with customer No. 22474. All attorneys/agents associated have been withdrawn. Applicant is reminded that there is no attorney of record at this time.

All future correspondence will be directed to the first named inventor Eric Reeves at the address indicated below.

There are no outstanding office actions at this time.

Telephone inquiries concerning this decision should be directed to the undersigned at 571-272-4231.

Michelle R. Eason
Paralegal Specialist
Office of Petitions

cc: **ERIC REEVES**
P.O. BOX 30683
CHARLOTTE, NC 28230

UNITED STATES PATENT AND TRADEMARK OFFICE

Commissioner for Patents
United States Patent and Trademark Office
P.O. Box 1450
Alexandria, VA 22313-1450
www.uspto.gov

MAR 16 2009

Buchanan Ingersoll & Rooney PC
One Oxford Centre
20th Floor
301 Grant Street
Pittsburgh, PA 15219-1410

In re application of Tzong Fu Lin Application No. 12/390,952 Filed: February 23, 2009 For: ROMAN SHADE HAVING CHILD SAFETY CORD RELEASE	: **DECISION ON PETITION** : **TO MAKE SPECIAL FOR** : **NEW APPLICATION** : **UNDER 37 CFR 1.102**

This is a decision on the petition filed on February 23, 2009 to make the above-identified application special for accelerated examination procedure under 37 C.F.R. § 1.102(d).

The petition to make the application special is **DISMISSED**.

REGULATION AND PRACTICE

A grantable petition to make special under 37 C.F.R. § 1.102(d) and pursuant to the "Change to Practice for Petitions in Patent Applications to Make Special and for Accelerated Examination" published in the Federal Register on June 26, 2006 (71 Fed. Reg. 36323), must satisfy the following conditions:

I. Conditions Regarding the Application:

1. the application must be a non-reissue utility or design application filed under 37 CFR 1.111(a);

2. the application, the petition and the required fees must be filed electronically using the USPTO's electronic filing system (EFS), or EFS-web; if not filed electronically, a statement asserting that EFS and EFS-web were not available during the normal business hours.

3. at the time of filing, the application must be complete under 37 CFR 1.51 and in condition for examination;

4. the application must contain three or fewer independent claims and twenty or fewer total claims and the claims must be directed to a single invention.

II. Conditions Regarding the Petition:

The petition must:

1. be filed with the application;

2. include a statement that applicant agrees not to separately argue the patentability of any independent claim during any appeal in the application;

3. include a statement that applicant agrees to make an election without traverse in a telephone interview.

4. include a statement that applicant agrees to conduct such an interview when requested by the examiner.

5. include a statement, made based on a good faith belief, that a preexamination search in compliance with the following requirements, was conducted, including an identification of the field of search by United States class and subclass, where applicable, and for database searches, the search logic or chemical structure or sequence used as a query, the name of the file(s) searched and the database service, and the date of the search.

The preexamination search must:

5.1 involve U.S. patents and patent application publications, foreign patent documents, and non-patent literature, unless the applicant can justify with reasonable certainty that no references more pertinent than those already identified are likely to be found in the eliminated sources and includes such a justification with this statement;

5.2. be directed to the claimed invention and encompass all of the features of the claims, giving the claims the broadest reasonable expectation;

5.3. encompass the disclosed features that may be claimed.

6. must provide in support of the petition an accelerated examination support document.

An accelerated examination support document must include:

6.1. an information disclosure statement (IDS) in compliance with 37 CFR 1.98 citing each reference deemed most closely related to the subject matter of each of the claims;

6.2. an identification of all the limitations in the claims that are disclosed by the reference specifying where the limitation is disclosed in the cited reference;

6.3. a detailed explanation of how each of the claims are patentable over the references cited with particularity required by 37 CFR 1.111(b) and (c);

6.4. a concise statement of the utility of the invention as defined in each of the independent claims (unless the application is a design application);

6.5. a showing of where each limitation of the claims finds support under 35 USC 112, first paragraph, in the written description of the specification. If applicable, the showing must also identify: (1) each means- (or step) plus-function claim element that invokes consideration under 35 UDC 112, sixth paragraph; and (2) the structure, material, or acts in the specification that corresponds to each means- (or step) plus-function claim element that invokes consideration under 35 UDC 112, sixth paragraph; if the application claims the benefit of one or more applications under title 35, United States Code, the showing must also include where each limitation

of the claims finds support under 35 USC 112, first paragraph, in each such application in which such supports exists;
6.6. an identification of any cited references that may be disqualified under 35 USC 103(c).

REVIEW OF FACTS

The petition in this case fails to comply with conditions II.6.2, and II.6.5, above

Regarding items II.6.2, the manner in which applicant has chosen to provide the Identification of Limitations Disclosed by References is confusing, at least for the independent claims. Because the independent claims are explained in terms of what is taught using the language of the references themselves rather than listing the limitations of the claims, there currently is not an adequate explanation specifying what limitations are taught and where each of the limitations (or portions thereof) are disclosed in each of the references. While there is no mandatory format needed to be followed, an explanation of the references as applicant has done does not clearly enough identify what limitations are taught, and is not sufficient to meet the above condition.

The USPTO website has an example of the proper manner of documenting limitations taught by cited art, and the manner of explaining claim patentability over the references, for an Accelerated Examination Support Document at: http://www.uspto.gov/web/patents/accelerated/.

As to condition to II.6.5, the showing of where each limitation of each of the claims finds support under 35 USC 112 in the written description of the application is sufficient. However, similar support (if any) for the claimed invention must additionally be shown in any parent application upon which priority is claimed under 35 USC 119. Specifically, for provisional application 61/118,227, a listing of where the limitations of the claims find support is necessary in order to allow the examiner to determine the effective filing dates of the various claims.

Therefore, the petition fails to meet the required conditions to be accorded special status under the accelerated examination procedure.

DECISION

For the above-stated reasons, the petition is **DISMISSED**. The application will therefore be taken up by the examiner for action in its regular turn.

Petitioner is given a single opportunity to perfect the petition. Any request for reconsideration of this decision must be submitted within 1 (one) month or 30

(thirty) days, whichever is longer, (no extension of time under 37 CFR 1.136(a)) from the date of this decision in order to be considered timely. Any request for reconsideration must address the deficiencies indicated above.

Petitioner is reminded that, upon granting of the special status of the application on request for reconsideration, the application will be processed expeditiously. However, due to the dismissal of the instant petition, examination may not be completed within twelve months of the filing date of the application.

Any inquiry regarding this decision should be directed to Quality Assurance Specialist Steven N. Meyers, at (571) 272-6611.

Steven N. Meyers,
Quality Assurance Specialist
Technology Center 3600

Sm/sm: 3/16/09

UNITED STATES PATENT AND TRADEMARK OFFICE

Commissioner for Patents
United States Patent and Trademark Office
P.O. Box 1450
Alexandria, VA 22313-1450
www.uspto.gov

APR 1 0 2009

Buchanan Ingersoll & Rooney PC
One Oxford Centre
20th Floor
301 Grant Street
Pittsburgh, PA 15219-1410

In re application of
Tzong Fu Lin
Application No. 12/390,952
Filed: February 23, 2009
For: ROMAN SHADE HAVING CHILD SAFETY CORD RELEASE

: **DECISION ON PETITION**
: **TO MAKE SPECIAL FOR**
: **NEW APPLICATION**
: **UNDER 37 CFR 1.102**

This is a decision on the renewed petition filed on April 1, 2009 to make the above-identified application special for accelerated examination procedure under 37 C.F.R. § 1.102(d).

The petition to make the application special is **GRANTED**.

The application is eligible for accelerated examination and the petition complies with the conditions for granting the application special status pursuant to the "Change to Practice for Petitions in Patent Applications to Make Special and for Accelerated Examination" published June 26, 2006, in the Federal Register. (71 Fed. Reg. 36323).

The prosecution of the instant application will be conducted expeditiously according to the following guidelines.

1. The application will be docketed to an examiner and taken up for action within two weeks of the date of this decision.

2. Restriction Practice:
If the examiner determines that the claims are not directed to a single invention, a telephone request to elect one single invention will be made pursuant to MPEP 812.01. As a prerequisite to the grant of this petition, the applicant has agreed to make an oral election, by telephone, without traverse. If the applicant refuses to make an election without traverse, or the examiner cannot reach the applicant after a reasonable effort, the examiner will treat the first claimed invention (invention defined by claim 1) as having being constructively elected without traverse for examination.

3. Office action:
If it is determined that, after appropriate consultation, there is a potential rejection or any other issue to be addressed, the examiner will telephone the applicant and arrange an interview to discuss and resolve the issue. An Office action, other than a Notice of Allowance and Fee(s) Due (Notice of Allowance), will not be issued unless either: 1) an interview was conducted but did not result in agreed to action that places the application in condition for allowance, or, 2) a determination is made that an interview would be unlikely to result in the application being placed in condition for allowance, and 3) an internal conference has been held to review any rejection of any claim.

4. Time for Reply:
An Office action other than a Notice of Allowance or a final Office action will set a shortened statutory period of one month or thirty days, whichever is longer, for reply with no extension of time available under 37 CFR 1.136(a). Failure to timely file a reply within this non-extendible period for reply will result in the abandonment of the application.

5. Reply by Applicant:
A timely reply to an Office action other than the Notice of Allowance must be submitted electronically via EFS or EFS-web and limited to addressing the rejections, objections and requirement made. Any amendment that attempts to: 1) add claims which would result in more than three pending independent claims or more than twenty pending total claims; 2) present claims not encompassed by the pre-examination search or an updated accelerated examination support document; or 3) present claims that are directed to a non-elected invention or an invention other than that previously claimed and examined in the application, will be treated as not fully responsive and will not be entered.

For any amendment to the claims (including any new claim) that is not encompassed by the accelerated examination support document, applicant must provide an updated accelerated examination support document that encompasses the amended or new claims at the time of filing of the amendment.

To proceed expeditiously with the examination, it is recommended that a reply with amendments made to any claim or with any new claim being added be accompanied by an updated accelerated examination support document or a statement explaining how the amended or new claim is supported by the original accelerated examination support document.

6. Information Disclosure Statement (IDS):
Any IDS filed during prosecution must be submitted electronically via EFS or EFS-web, accompanied by an updated accelerated examination support document, and be in compliance with 37 CFR 1.97 and 1.98.

7. Post-Allowance Processing:
To expedite processing of the allowed application into a patent, the applicant must: 1) pay the required fees within one month of the date of the Notice of Allowance, and 2) not file any post allowance papers not required by the Office. In no event may the issue

fee be paid and accepted later than three months from the date of the Notice of Allowance.

8. After-Final and Appeal Procedures:
To expedite prosecution, after receiving the final Office action, applicant must: 1) promptly file a notice of appeal, an appeal brief and appeal fees; and 2) not request a pre-appeal brief conference.

Any amendment, affidavit or other evidence filed after final Office action must comply with applicable rules and the requirements outlined in numbered paragraphs 5 and 6 above.

On appeal, the application will proceed according to normal appeal procedures. After appeal, the application will again be treated special.

9. Proceedings Outside the Normal Examination Process:
If the application becomes involved in a proceeding that is outside the normal examination process (e.g., a secrecy order, national security review, interference proceeding, petitions under 37 CFR 1.181, 182 or 183), the application will be treated special before and after such proceeding.

10. Final Disposition:
The twelve month goal of this accelerated examination procedure ends with a final disposition. The mailing of a final Office action, a Notice of Allowance, the filing of a Notice of Appeal, or the filing of a Request for Continued Examination (RCE) is the final disposition.

If, during prosecution, a paper is not filed electronically using EFS-web, a reply is filed but is not fully responsive, the application is involved in an appeal, or a proceeding outside normal examination process, the application will still be examined expeditiously, however, the final disposition may occur more than twelve months from the filing of the application.

Any inquiry regarding this decision should be directed to Quality Assurance Specialist Steven N. Meyers, at (571) 272-6611.

Steven N. Meyers,
Quality Assurance Specialist
Technology Center 3600

Sm/sm: 4/9/09

UNITED STATES PATENT AND TRADEMARK OFFICE

UNITED STATES DEPARTMENT OF COMMERCE
United States Patent and Trademark Office
Address: COMMISSIONER FOR PATENTS
P.O. Box 1450
Alexandria, Virginia 22313-1450
www.uspto.gov

APPLICATION NO.	FILING DATE	FIRST NAMED INVENTOR	ATTORNEY DOCKET NO.	CONFIRMATION NO.
12/391,047	02/23/2009	Makoto Asakura	SUTOSH.317AUS	6296

7590 11/23/2009
KNOBBE MARTENS OLSON & BEAR LLP
2040 MAIN STREET
FOURTEENTH FLOOR
IRVINE, CA 92614

EXAMINER
YOUNG, WAYNE R

ART UNIT	PAPER NUMBER
2627	

NOTIFICATION DATE	DELIVERY MODE
11/23/2009	ELECTRONIC

DECISION GRANTING PETITION UNDER 37 CFR 1.138(d)

The declaration of express abandonment is recognized

This is in response to the petition under 37 CFR 1.138(d), requesting for a refund of any previously paid search fee and excess claims fee in the above-identified application.

The petition is granted.

The express abandonment is recognized. Any previously paid search fee and excess claims fee are hereby refunded.

Telephone inquiries should be directed to the Office of Data Management at (571) 272-4200.

Nimi Farmer

Patent Publication Branch
Office of Data Management

Refund Ref:
11/20/2009 0000377009

Credit Card Refund Total: $760.00

Master C: XXXXXXXXXXXX5553

Adjustment date: 11/20/2009 NFARMER
02/24/2009 INTEFSW 00004266 12391047
02 FC:1111 -540.00 OP
04 FC:1201 -220.00 OP

FORM PET651G (Rev. 08/07)

UNITED STATES PATENT AND TRADEMARK OFFICE

Commissioner for Patents
United States Patent and Trademark Office
P.O. Box 1450
Alexandria, VA 22313-1450
www.uspto.gov

BOYLE FREDRICKSON S.C.
840 North Plankinton Avenue
MILWAUKEE WI 53203

MAILED
JUN 15 2009
OFFICE OF PETITIONS

MAILED
JU 5 2009
OFFICE OF PETITIONS

In re Application of Terrand B. Grall Application No.12/391,050 Filed: February 23, 2009 Attorney Docket Number: 1871.001 Title: Therapeutic Deep Pressure Aid For Disabled Persons	DECISION REFUSING STATUS UNDER 37 C.F.R. §1.47(b)

This is in response to the petition under 37 C.F.R. §1.47(b), filed May 5. 2009.

Rule 47 applicant is given **TWO MONTHS** from the mailing date of this decision to reply, correcting the below-noted deficiencies. Any reply should be entitled "Request for Reconsideration of Petition Under 37 C.F.R. §1.47(b)," and should only address the deficiencies noted below, except that the reply may include an oath or declaration executed by the non-signing inventor. **Failure to respond will result in abandonment of the application**. Any extensions of time will be governed by 37 C.F.R. §1.136(a).

A grantable petition under 37 C.F.R. §1.47(b) requires: (1) proof that the non-signing inventor cannot be reached or refuses to sign the oath or declaration; (2) an acceptable oath or declaration; (3) the petition fee; (4) a statement of last known address of the non-signing inventor; (5) proof of proprietary interest; and (6) a showing that such action is necessary to preserve the rights of parties or to prevent irreparable damage. Rule 47 applicant has failed to establish (2), (5) and (6).

Pursuant to petitioner's request deposit account no. 50-1170 will be charged the $200.00 petition fee.

An Acceptable Oath or Declaration

As to item (2), applicant failed to submit an oath or declaration in compliance with 37 CFR 1.63. The 37 CFR 1.47(b) applicant must make the oath required by 37 CFR 1.63 and 1.64 or 1.175. Where a corporation is the 37 CFR 1.47(b) applicant, an officer (President, Vice-President, Secretary, Treasurer, or Chief Executive Officer) thereof should normally sign the necessary oath or declaration. A corporation may authorize any person, including an attorney or agent registered to practice before the U.S. Patent and Trademark Office, to sign the application oath or declaration on its behalf. Where an oath or declaration is signed by a registered attorney or agent on behalf of a corporation, either proof of the

attorney's or agent's authority in the form of a statement signed by an appropriate corporate officer must be submitted, or the attorney or agent may simply state that he or she is authorized to sign on behalf of the corporation. **The declaration also must state the full name, residence, post office address, and citizenship of the non-signing inventor.** The declaration submitted on petition fails to provide the citizenship of inventor Grall. The declaration also failed to provide the mailing address of the inventor.

On renewed petition, a newly executed declaration is required.

Proof of Proprietary Interest

As to item (5), when an application is deposited pursuant to 37 CFR 1.47(b), the 37 CFR 1.47(b) applicant must prove that (A) the invention has been assigned to the applicant, or (B) the inventor has agreed in writing to assign the invention to the applicant, or (C) the applicant otherwise has sufficient proprietary interest in the subject matter to justify the filing of the application. If the application has been assigned, a copy of the assignment (in the English language) must be submitted. The assignment must clearly indicate that the invention described in the 37 CFR 1.47(b) application was assigned to the 37 CFR 1.47(b) applicant. A statement under 37 CFR 3.73(b) by the assignee must also be submitted (see MPEP § 324).

When an inventor has agreed in writing to assign an invention described in an application deposited pursuant to 37 CFR 1.47(b), a copy of that agreement should be submitted. If an agreement to assign is dependent on certain specified conditions being met, it must be established by a statement of facts by someone with first hand knowledge of the circumstances in which those conditions have been met. A typical agreement to assign is an employment agreement where an employee (non-signing inventor) agrees to assign to his or her employer (37 CFR 1.47(b) applicant) all inventions made during employment. When such an agreement is relied on, it must be established by a statement of a person having firsthand knowledge of the facts that the invention was made by the employee while employed by the 37 CFR 1.47(b) applicant.

If the invention has not been assigned, or if there is no written agreement to assign, the 37CFR 1.47(b) applicant must demonstrate that he or she otherwise has a sufficient proprietary interest in the matter. A proprietary interest obtained other than by assignment or agreement to assign may be demonstrated by an appropriate legal memorandum to the effect that a court of competent jurisdiction (federal, state, or foreign) would by the weight of authority in that jurisdiction award title of the invention to the 37 CFR 1.47(b) applicant. The facts in support of any conclusion that a court would award title to the 37 CFR 1.47(b) applicant should be made of record by way of an affidavit or declaration of the person having firsthand knowledge of same. The legal memorandum should be prepared and signed by an attorney at law familiar with the law of the jurisdiction involved. A copy (in the English language) of a statute (if other than the United States statute) or a court decision (if other than a reported decision of a

federal court or a decision reported in the United States Patents Quarterly) relied on to demonstrate a proprietary interest should be made of record.

Petitioner has provided a an unsigned assignment agreement, which is not sufficient evidence of proprietary interests.

Showing That Such Action Is Necessary to Preserve the Rights of Parties or to Prevent Irreparable Damage.

As to item (6), applicant has failed to provide a statement that the granting of rule 47 status is necessary to preserve the rights of the rule 47 applicant or prevent irreparable damage. See MPEP 409.03(h).

Further correspondence with respect to this matter should be addressed as follows:

By mail:	Mail Stop Petition Commissioner for Patents P.O. Box 1450 Alexandria, VA 22313-1450
By facsimile:	(571)273-8300
By delivery service: (FedEx, UPS, DHL, etc.)	U.S. Patent and Trademark Office Customer Service Window, Mail Stop Petition Randolph Building 401 Dulany Street Alexandria, VA 22314

Telephone inquiries regarding this decision should be directed to the undersigned at (571) 272-3215.

Charlema R. Grant
Petitions Attorney
Office of Petitions

UNITED STATES PATENT AND TRADEMARK OFFICE

Commissioner for Patents
United States Patent and Trademark Office
P.O. Box 1450
Alexandria, VA 22313-1450
www.uspto.gov

BOYLE FREDRICKSON S.C.
840 North Plankinton Avenue
MILWAUKEE WI 53203

COPY MAILED

SEP 09 2009

OFFICE OF PETITIONS

In re Application of	:	
Terrand B. Grall	:	
Application No.12/391,050	:	DECISION REFUSING STATUS
Filed: February 23, 2009	:	UNDER 37 C.F.R. §1.47(b)
Attorney Docket Number: 1871.001	:	
Title: Therapeutic Deep Pressure Aid For Disabled Persons	:	

This is in response to the renewed petition under 37 C.F.R. §1.47(b), filed August 13. 2009.[1]

Rule 47 applicant is given **TWO MONTHS** from the mailing date of this decision to reply, correcting the below-noted deficiencies. Any reply should be entitled "Request for Reconsideration of Petition Under 37 C.F.R. §1.47(b)," and should only address the deficiencies noted below, except that the reply may include an oath or declaration executed by the non-signing inventor. **Failure to respond will result in abandonment of the application**. Any extensions of time will be governed by 37 C.F.R. §1.136(a).

A grantable petition under 37 C.F.R. §1.47(b) requires: (1) proof that the non-signing inventor cannot be reached or refuses to sign the oath or declaration; (2) an acceptable oath or declaration; (3) the petition fee; (4) a statement of last known address of the non-signing inventor; (5) proof of proprietary interest; and (6) a showing that such action is necessary to preserve the rights of parties or to prevent irreparable damage. Rule 47 applicant has failed to establish (5).

The petition decision mailed on June 12, 2009 provided petitioner with a two month extendable period for reply. Thus a reply without an extension of time was required on August 12, 2009. Thus in order to make the renewed petition timely, deposit account no. 50-1170 will be charged the $65.00 one month extension of time fee.

Proof of Proprietary Interest

[1] It should be noted that a petition under 37 CFR 1.47(b) addresses the situation when no inventors are available. A petition under 37 CFR 1.183 is not required.

As to item (5), when an application is deposited pursuant to 37 CFR 1.47(b), the 37 CFR 1.47(b) applicant must prove that (A) the invention has been assigned to the applicant, or (B) the inventor has agreed in writing to assign the invention to the applicant, or (C) the applicant otherwise has sufficient proprietary interest in the subject matter to justify the filing of the application. If the application has been assigned, a copy of the assignment (in the English language) must be submitted. The assignment must clearly indicate that the invention described in the 37 CFR 1.47(b) application was assigned to the 37 CFR 1.47(b) applicant. A statement under 37 CFR 3.73(b) by the assignee must also be submitted (see MPEP § 324).

When an inventor has agreed in writing to assign an invention described in an application deposited pursuant to 37 CFR 1.47(b), a copy of that agreement should be submitted. If an agreement to assign is dependent on certain specified conditions being met, it must be established by a statement of facts by someone with first hand knowledge of the circumstances in which those conditions have been met. A typical agreement to assign is an employment agreement where an employee (non-signing inventor) agrees to assign to his or her employer (37 CFR 1.47(b) applicant) all inventions made during employment. When such an agreement is relied on, it must be established by a statement of a person having firsthand knowledge of the facts that the invention was made by the employee while employed by the 37 CFR 1.47(b) applicant.

If the invention has not been assigned, or if there is no written agreement to assign, the 37CFR 1.47(b) applicant must demonstrate that he or she otherwise has a sufficient proprietary interest in the matter. A proprietary interest obtained other than by assignment or agreement to assign may be demonstrated by an appropriate legal memorandum to the effect that a court of competent jurisdiction (federal, state, or foreign) would by the weight of authority in that jurisdiction award title of the invention to the 37 CFR 1.47(b) applicant. The facts in support of any conclusion that a court would award title to the 37 CFR 1.47(b) applicant should be made of record by way of an affidavit or declaration of the person having firsthand knowledge of same. The legal memorandum should be prepared and signed by an attorney at law familiar with the law of the jurisdiction involved. A copy (in the English language) of a statute (if other than the United States statute) or a court decision (if other than a reported decision of a federal court or a decision reported in the United States Patents Quarterly) relied on to demonstrate a proprietary interest should be made of record.

On renewed petition, petitioner has provided a copy of a redacted purchase agreement and an employment agreement. Petitioner insists that the purchase agreement establishes that the above -identified application was assigned. However, the purchase agreement will not serve to establish sufficient proprietary interest. Pursuant to 37 CFR 3.21 an assignment relating to a patent must identify the patent by the patent number. An assignment relating to a national patent application must identify the national patent application by the application number (consisting of the series code and the serial number, e.g., 07/123,456). If an assignment of a patent application filed under § 1.53(b) is executed concurrently with, or subsequent to, the execution of the patent application,

but before the patent application is filed, it must identify the patent application by the name of each inventor and the title of the invention so that there can be no mistake as to the patent application intended. The purchase agreement fails to identify the application.

The employment agreement submitted fails to establish sufficient proprietary interest because it is not accompanied by a statement of a person having firsthand knowledge of the facts that the invention was made by the employee while employed by the 37 CFR 1.47(b) applicant/ employer.

Further correspondence with respect to this matter should be addressed as follows:

By mail:	Mail Stop Petition Commissioner for Patents P.O. Box 1450 Alexandria, VA 22313-1450
By facsimile:	(571)273-8300
By delivery service: (FedEx, UPS, DHL, etc.)	U.S. Patent and Trademark Office Customer Service Window, Mail Stop Petition Randolph Building 401 Dulany Street Alexandria, VA 22314

Telephone inquiries regarding this decision should be directed to the undersigned at (571) 272-3215.

Charlema Grant

Charlema Grant
Petitions Attorney
Office of Petitions

UNITED STATES PATENT AND TRADEMARK OFFICE

Commissioner for Patents
United States Patent and Trademark Office
P.O. Box 1450
Alexandria, VA 22313-1450
www.uspto.gov

COPY MAILED
FEB 03 2010

BOYLE FREDRICKSON S.C.
840 North Plankinton Avenue
MILWAUKEE WI 53203

In re Application of
Terrand B. Grall
Application No. 12/391, 050
Filed: October 7, 2008
Attorney Docket No. 1871.001
For: Therapeutic Deep Pressure Aid For Disabled Persons

DECISION GRANTING STATUS UNDER 37 CFR 1.47(b)

This is in response to the renewed petition under 37 CFR 1.47(b), filed November 5, 2009.

The petition is **GRANTED.**

Petitioner has shown that the non-signing inventor Terrand Grall has refused to join in the filing of the above-identified application.

The application and papers have been reviewed and found in compliance with 37 CFR 1.47(b). This application is hereby accorded Rule 1.47(b) status.

The last known address provided in the petition differs from the address provided in the declaration. If appropriate a signed supplemental application data sheet should be provided to update the mailing address of the legal representative.

As provided in 37 CFR 1.47(c), this Office will forward notice of this application's filing to the non-signing inventor at the address given in the petition. Notice of the filing of this application will also be published in the Official Gazette.

This application is being referred to the Office of Patent Application processing for pre-examination processing.

Telephone inquiries regarding this decision should be directed to the undersigned at (571) 272-3215.

Charlema Grant
Petitions Attorney
Office of Petitions

UNITED STATES PATENT AND TRADEMARK OFFICE

Commissioner for Patents
United States Patent and Trademark Office
P.O. Box 1450
Alexandria, VA 22313-1450
www.uspto.gov

Terrand B. Grall
W7514 Summit Road
Plymouth Wisconsin 53073

COPY MAILED
FEB 02 2010

In re Application of
Terrand B. Grall
Application No. 12/391, 050
Filed: October 7, 2008
Attorney Docket No. 1871.001
For: Therapeutic Deep Pressure Aid For Disabled Persons

Dear Sir:

You are named as the sole inventor in the above-identified United States patent application, filed under the provisions of 35 U.S.C. 116 (United States Code), and 37 CFR 1.47(b), Rules of Practice in Patent Cases. Should a patent be granted on the application you will be designated therein as a joint inventor.

As a named inventor you are entitled to inspect any paper in the file wrapper of the application, order copies of all or any part thereof (at a prepaid cost per 37 CFR 1.19) or make your position of record in the application. Alternatively, you may arrange to do any of the preceding through a registered patent attorney or agent presenting written authorization from you. If you care to join the application, counsel of record (see below) would presumably assist you. Joining the application would entail the filing of an appropriate oath or declaration by you pursuant to 37 CFR 1.63.

Telephone inquiries regarding this communication should be directed to the undersigned at (571) 272-3215. Requests for information regarding your application should be directed to the File Information Unit at (703) 308-2733. Information regarding how to pay for and order a copy of the application, or a specific paper in the application, should be directed to the Certification Division at (571) 272-3150 or 1 (800) 972-6382 (outside the Washington, DC area).

Charlema Grant
Petitions Attorney
Office of Petitions

cc: BOYLE FREDRICKSON S.C.
840 North Plankinton Avenue
MILWAUKEE WI 53203

UNITED STATES PATENT AND TRADEMARK OFFICE

COMMISSIONER FOR PATENTS
UNITED STATES PATENT AND TRADEMARK OFFICE
P.O. BOX 1450
ALEXANDRIA, VA 22313-1450
www.uspto.gov

Mr. Brian S. Mudge
Kenyon & Kenyon
Suite 700
1500 K. Street NW
Washington DC 20005

MAILED

MAR 23 2009

OFFICE OF PETITIONS

In re Application of
Chow, et al.
Application No.: 12/391,127
Filed: February 23, 2009
Docket No.: ATT/2001-0312CON

: DECISION ACCORDING STATUS
: UNDER 37 CFR 1.47(a)

This is in response to the communication received with the filing of this application on February 23, 2009, which communication is being treated as a request to accord 37 CFR 1.47(a) Status to the above-identified application.

The request is GRANTED.

Where status under 37 CFR 1.47 is granted in a first application and the non-signing inventor does not later join in the filing by executing an oath or declaration for the application, and another application (a child application) is later filed claiming the benefit of the filing date of the first application and using the declaration of the prior application, status under 37 CFR 1.47 continues to exist in the child application. Prior Application No 10/163,501, of which the instant application is a continuation, was accorded 37 CFR 1.47 status.

37 CFR 1.63(d) (3) states:

> Where the executed oath or declaration of which a copy is submitted for a continuation or divisional application was originally filed in a prior application accorded status under § 1.47, the copy of the executed oath or declaration for such prior application must be accompanied by:
>
> (i) A *copy* of the decision granting a petition to accord § 1.47 status to the prior application, unless all inventors or legal representatives have filed an oath or declaration to join in an application accorded status under § 1.47 of which the continuation or divisional application claims a benefit under 35 U.S.C. 120, 121, or 365(c).

A copy of the decision granting 37 CFR 1.47(a) status to the above-noted, prior-filed application appears in the record of the instant application.

The above-identified application and papers are in compliance with 37 CFR 1.47(a). This application is hereby accorded rule 1.47(a) status. As provided in 37 CFR 1.47(c), no notice of this application's filing will be forwarded to the nonsigning inventor nor will such notice be

published in the Official Gazette since notice regarding the filing of the prior application was given to the nonsigning inventor.

Telephone inquiries regarding this matter should be directed to the undersigned at (571) 272-3205.

/ALESIA M. BROWN/

Alesia M. Brown
Petitions Attorney
Office of Petitions

UNITED STATES PATENT AND TRADEMARK OFFICE

Commissioner for Patents
United States Patent and Trademark Office
P.O. Box 1450
Alexandria, VA 22313-1450

DAVIS WRIGHT TREMAINE LLP - San Francisco
505 MONTGOMERY STREET
SUITE 800
SAN FRANCISCO CA 94111

MAILED
JUN 21 2010
OFFICE OF PETITIONS

Applicant: Taylor, Jonathan
Appl. No.: 12/391,184
Filing Date: February 23, 2009
Title: Networked Computer Telephony System Driven By Web-Based Applications
Attorney Docket No.: 0084599-001US2
Pub. No.: US 2009/0225748 A1
Pub. Date: September 10, 2009

This is a decision on the request for a corrected patent application publication under 37 CFR 1.221(b), received on October 23, 2009, for the above-identified application.

Applicant requests that the application be republished because the patent application publication contains material error in containing an error in dependent claim 9, in which "running" is printed as "mining".

The request is DISMISSED.

37 CFR 1.221 (b) is applicable "only when **the Office makes a material mistake** which is apparent from Office records.... Any request for a corrected publication or revised patent application publication other than provided as provided in paragraph (a) of this section must be filed within two months from the date of the patent application publication. This period is not extendable." (Emphasis added) A material mistake must affect the public's ability to appreciate the technical disclosure of the patent application publication, to determine the scope of the patent application publication, or to determine the scope of the provisional rights that an applicant may seek to enforce upon issuance of a patent.[1]

The error noted by requestor with respect the misprint of the word "running" in dependent claim 9 is not a material Office error under 37 CFR 1.221(b). The error is due to the quality of the text, which makes it difficult to electronically reproduce by digital imaging and optical character recognition. See 37 CFR 1.52(a)(1)(v), which states that all papers that are to become a permanent part of Office records must be presented "in a form having sufficient clarity and contrast between the paper and the writing to permit . . . electronic capture by use of digital imaging and optical character recognition." As set forth at MPEP 1121, "applications with poor

[1]Changes to Implement Eighteen-Month Publication of Patent Applications, 65 FR 57023, 57038 (Sept. 20, 2000), 1239, Off. Gaz. Pat. Office Notices 63, 75 (Oct. 10, 2000) (final rule).

quality text, which may be acceptable for scanning and examination purposes, may lead to errors in the patent application publication. Correction of these errors and inclusion of any desired amendments into the text of the originally-filed specification and drawings will only occur if applicant files a request for republication under 37 CFR 1.221(a). They will not be corrected by the Office in a corrected publication under 37 CFR 1.221(b)."

The applicant is advised that a "request for republication of an application previously published" may be filed under 37 CFR 1.221 (a). Such a request for republication "must include a copy of the application compliance with the Office's electronic filing system requirements and be accompanied by the publication fee set forth in § 1.18 (d) and the processing fee set forth in § 1.17 (i)." If the request for republication does not comply with the electronic filing system requirements, the republication will not take place and the publication fee set forth in § 1.18 (d) will be refunded. The processing fee will be retained.

Any request for republication under 37 CFR 1.221(a), must be submitted via the EFS system, as a "Pre-Grant Publication" and questions or request for reconsideration of the decision, should be addressed as follows:

By mail to: Mail Stop PGPUB
Commissioner for Patents
P.O. Box 1450
Alexandria, Va. 22313-1450

A guide for filing a request for a Pre-Grant Publication, such as a request for republication, may be found on the link below:

http://www.uspto.gov/ebc/portal/tutorials.htm

Inquiries relating to this matter may be directed to Michael Cygan, Legal Advisor, at (571) 272-7700, or the undersigned at (571) 272-7709.

Mark Polutta
Senior Legal Advisor
Office of Patent Legal Administration
Office of the Deputy Commissioner
for Patent Examination Policy

UNITED STATES PATENT AND TRADEMARK OFFICE

Commissioner for Patents
United States Patent and Trademark Office
P.O. Box 1450
Alexandria, VA 22313-1450
www.uspto.gov

Sheridan Ross PC
1560 Broadway
Suite 1200
Denver, CO 80202

COPY MAILED

APR 17 2009

OFFICE OF PETITIONS

In re Application of :
Sheldon F. Goldberg et al. :
Application No. 12/391,199 :
Filed: February 23, 2009 :
Attorney Docket No. 3367-2-2-3 :

DECISION ON PETITION
TO MAKE SPECIAL UNDER
37 CFR 1.102(c)(1)

This is a decision on the petition under 37 CFR 1.102(c)(1), filed February 24, 2009, to make the above-identified application special based on applicant's age as set forth in M.P.E.P. § 708.02, Section IV.

The petition is **GRANTED**.

A grantable petition to make an application special under 37 CFR 1.102(c)(1) and MPEP § 708.02, Section IV: Applicant's Age must be accompanied by evidence showing that at least one of the applicants is 65 years of age, or more, such as a birth certificate or a statement by applicant. No fee is required

The instant petition includes a statement by an attorney on behalf of the applicant that he/she is 65 years of age or older. Accordingly, the above-identified application has been accorded "special" status.

Telephone inquiries concerning this decision should be directed to Kimberly Inabinet at 571-272-4618.

All other inquiries concerning the status of the application should be directed to the Office of Patent Examination Processing at 571-272-4000.

Upon completion of the pre-examination processing by the Office of Patent Application Processing, this application will be referred to Technology Center Art Unit 3714 for action on the merits commensurate with this decision.

Kimberly Inabinet

Kimberly Inabinet
Petitions Examiner
Office of Petitions

UNITED STATES PATENT AND TRADEMARK OFFICE

Commissioner for Patents
United States Patent and Trademark Office
P.O. Box 1450
Alexandria, VA 22313-1450
www.uspto.gov

MAILED

MAY 17 2010

OFFICE OF PETITIONS

MORRISON & FOERSTER LLP
755 PAGE MILL RD
PALO ALTO, CA 94304-1018

In re Application of	:	
TSUCHIDA, Takashi et al.	:	
Application No. 12/391,254	:	DECISION ON PETITION
Filed: September 12, 2008	:	TO WITHDRAW
Attorney Docket No. **057989.00**	:	FROM RECORD
	:	

This is a decision on the Request to Withdraw as attorney or agent of record under 37 C.F.R. § 1.36(b), filed March 29, 2010.

The request is **NOT APPROVED** as moot.

A review of the file record indicates that the power of attorney to Morrison & Foerster LLP has been revoked by the assignee of the patent application on April 22, 2010. Accordingly, the request to withdraw under 37 C.F.R. § 1.36(b) is moot.

All future communications from the Office will continue to be directed to the below-listed address until otherwise notified by applicant.

Telephone inquires concerning this decision should be directed to the undersigned at 571-272- 4231.

Michelle R. Eason
Paralegal Specialist
Office of Petitions

cc: **HODGSON RUSS LLP**
THE GUARANTY BUILDING
140 PEARL STREET
SUITE 100
BUFFALO NY 14202-4040

UNITED STATES PATENT AND TRADEMARK OFFICE

Commissioner for Patents
United States Patent and Trademark Office
P.O. Box 1450
Alexandria, VA 22313-1450
www.uspto.gov

FISH & RICHARDSON, PC
P.O. BOX 1022
MINNEAPOLIS MN 55440-1022

MAILED

APR 16 2010

OFFICE OF PETITIONS

In re Application of	:	
Winston I. Way	:	DECISION GRANTING STATUS
Application No. 12/391,256	:	UNDER 37 CFR 1.47(b)
Filed: February 23, 2009	:	
Attorney Docket No. 14723-0032001	:	

This is in response to the petition under 37 CFR 1.47(b), filed October 12, 2009.

The petition is **GRANTED.**

Petitioner has shown that the non-signing inventor [has refused] [cannot be located] to join in the filing of the above-identified application.

The application and papers have been reviewed and found in compliance with 37 CFR 1.47(b). This application is hereby accorded Rule 1.47(b) status.

As provided in 37 CFR 1.47(c), this Office will forward notice of this application's filing to the non-signing inventor at the address given in the petition. Notice of the filing of this application will also be published in the Official Gazette.

This application file is being referred to the Office of Patent Application Processing for pre-examination processing.

Telephone inquiries regarding this decision should be directed to the undersigned at (571) 272-3226.

Andrea Smith
Petitions Examiner
Office of Petitions

UNITED STATES PATENT AND TRADEMARK OFFICE

Commissioner for Patents
United States Patent and Trademark Office
P.O. Box 1450
Alexandria, VA 22313-1450
www.uspto.gov

Winston I. Way
5096 Harcum Lane
Irvine, CA 92612

MAILED

APR 16 2010

OFFICE OF PETITIONS

In re Application of
Winston I. Way
Application No. 12/391,256
Filed: February 23, 2009
For: SPECTRALLY EFFICIENT PARALLEL OPTICAL WDM CHANNELS FOR LONG-HAUL MAN AND WAN OPTICAL NETWORKS

Dear Mr. Way:

You are named as a joint inventor in the above-identified United States patent application, filed under the provisions of 35 U.S.C. 116 (United States Code), and 37 CFR 1.47(b), Rules of Practice in Patent Cases. Should a patent be granted on the application you will be designated therein as a joint inventor.

As a named inventor you are entitled to inspect any paper in the file wrapper of the application, order copies of all or any part thereof (at a prepaid cost per 37 CFR 1.19) or make your position of record in the application. Alternatively, you may arrange to do any of the preceding through a registered patent attorney or agent presenting written authorization from you. If you care to join the application, counsel of record (see below) would presumably assist you. Joining the application would entail the filing of an appropriate oath or declaration by you pursuant to 37 CFR 1.63.

Telephone inquiries regarding this communication should be directed to the undersigned at (571) 272-3226. Requests for information regarding your application should be directed to the File Information Unit at (703) 308-2733. Information regarding how to pay for and order a copy of the application, or a specific paper in the application, should be directed to the Certification Division at (571) 272-3150 or 1 (800) 972-6382 (outside the Washington, DC area).

Andrea Smith
Petitions Examiner
Office of Petitions

cc: FISH & RICHARDSON, PC
P.O. BOX 1022
MINNEAPOLIS, MN 55440-1022

UNITED STATES PATENT AND TRADEMARK OFFICE

UNITED STATES DEPARTMENT OF COMMERCE
United States Patent and Trademark Office
Address: COMMISSIONER FOR PATENTS
P.O. Box 1450
Alexandria, Virginia 22313-1450
www.uspto.gov

APPLICATION NO.	FILING DATE	FIRST NAMED INVENTOR	ATTORNEY DOCKET NO.	CONFIRMATION NO.
12/391,285	02/24/2009	Daniel A. Katz		6749

37592 7590 07/28/2009
DANIEL KATZ
87 TZAHAL ST.
KIRYAT-ONO, 55451
ISRAEL

EXAMINER

ART UNIT	PAPER NUMBER
2112	

MAIL DATE	DELIVERY MODE
07/28/2009	PAPER

Please find below and/or attached an Office communication concerning this application or proceeding.

The time period for reply, if any, is set in the attached communication.

UNITED STATES PATENT AND TRADEMARK OFFICE

Commissioner for Patents
United States Patent and Trademark Office
P.O. Box 1450
Alexandria, VA 22313-1450
www.uspto.gov

DANIEL KATZ
87 TZAHAL ST.
KIRYAT-ONO 55451 IL ISRAEL

In re Application of: KATZ, DANIEL A. Serial No.: 12/391,285 Filed: February 24, 2009 Title: **MODULATING TRANSMISSION TIMING FOR DATA COMMUNICATIONS**	DECISION ON PETITION TO MAKE SPECIAL FOR NEW APPLICATION UNDER 37 C.F.R. § 1.102 & M.P.E.P. § 708.02

This is a decision on the petition filed on February 24, 2009 to make the above-identified application special for accelerated examination procedure under 37 C.F.R. § 1.102(d).

The petition to make the application special is **DISMISSED**.

REGULATION AND PRACTICE

A grantable petition to make special under 37 C.F.R. § 1.102(d) and pursuant to the "Change to Practice for Petitions in Patent Applications to Make Special and for Accelerated Examination" published in the Federal Register on June 26, 2006 (71 Fed. Reg. 36323), must satisfy the following conditions:

I. Conditions Regarding the Application:

1. the application must be a non-reissue utility or design application filed under 37 CFR 1.111(a);

2. the application, the petition and the required fees must be filed electronically using the USPTO's electronic filing system (EFS), or EFS-web; if not filed electronically, a statement asserting that EFS and EFS-web were not available during the normal business hours.

3. at the time of filing, the application must be complete under 37 CFR 1.51 and in condition for examination;

4. the application must contain three or fewer independent claims and twenty or fewer total claims and the claims must be directed to a single invention.

II. Conditions Regarding the Petition:

The petition must:

1. be filed with the application;

2. include a statement that applicant agrees not to separately argue the patentability of any independent claim during any appeal in the application;

3. include a statement that applicant agrees to make an election without traverse in a telephone interview.

4. include a statement that applicant agrees to conduct such an interview when requested by the examiner.

5. include a statement, made based on a good faith belief, that a preexamination search in compliance with the following requirements, was conducted, including an identification of the filed of search by United States class and subclass, where applicable, and for database searches, the search logic or chemical structure or sequence used as a query, the name of the file(s) searched and the database service, and the date of the search.

The preexamination search must:

5.1 involve U.S. patents and patent application publications, foreign patent documents, and non-patent literature, unless the applicant can justify with reasonable certainty that no references more pertinent than those already identified are likely to be found in the eliminated sources and includes such a justification with this statement;

5.2. be directed to the claimed invention and encompass all of the features of the claims, giving the claims the broadest reasonable interpretation;

5.3. encompass the disclosed features that may be claimed.

6. must provide in support of the petition an accelerated examination support document.

An accelerated examination support document must include:

6.1. an information disclosure statement (IDS) in compliance with 37 CFR 1.98 citing each reference deemed most closely related to the subject matter of each of the claims;

6.2. an identification of all the limitations in the claims that are disclosed by the reference specifying where the limitation is disclosed in the cited reference;

6.3. a detailed explanation of how each of the claims are patentable over the references cited with particularity required by 37 CFR 1.111(b) and (c);

6.4. a concise statement of the utility of the invention as defined in each of the independent claims (unless the application is a design application);

6.5. a showing of where each limitation of the claims finds support under 35 USC 112, first paragraph, in the written description of the specification. If applicable, the showing must also identify: (1) each means- (or step) plus-function claim element that invokes consideration under 35 USC 112, sixth paragraph; and (2) the structure, material, or acts in the specification that corresponds to each means- (or step) plus-function claim element that invokes consideration under 35 USC 112, sixth paragraph; if the application claims the benefit of one or more applications under title 35, United States Code, the showing must also include where each limitation of the claims finds support under 35 USC 112, first paragraph, in each such application in which such supports exists;

6.6. an identification of any cited references that may be disqualified under 35 USC 103(c).

REVIEW OF FACTS

The conditions set forth under section I. above are considered to have been met. However, the petition fails to comply with conditions set forth under section II, items 5.2 and 5.3.

For these reasons cited above, the petition fails to meet the required conditions to be accorded special status under the accelerated examination procedure.

Regarding the requirement in item 5.2 and 5.3 above, the preexamination search document provided with the instant petition is deficient as follows: The US field of search and database searches which are to be provided under section 8(A) are not sufficient. In addition to the search areas provided, applicant would also need to search the following class/subclasses:
375/259, 295, 316, 324, 340; and 329/311, 313.

If any request for reconsideration is filed, an updated preexamination search must be conducted as per item 5.1 above, and the Preexamination Search Document must be amended to indicate such; a new Information Disclosure Statement should be filed to cite any newly found prior art, and the Accelerated Examination Support Document must also be amended to include the necessary reference and discussion of any newly found and cited prior art in accordance with all of items 6 through 6.6 above.

DECISION

For the above-stated reasons, the petition is **dismissed**. The application will therefore be taken up by the examiner for action in its regular turn.

Petitioner is given a single opportunity to perfect the petition. Any request for reconsideration of this decision must be submitted within 1 (one) month or 30 (thirty) days, whichever is longer, (no extension of time under 37 CFR 1.136(a)) from the date of this decision in order to be considered timely. Any request for reconsideration must address the deficiencies indicated above.

Petitioner is reminded that, upon granting of the special status of the application on request for reconsideration, the application will be processed expeditiously. However, due to the dismissal of the instant petition, examination may not be completed within twelve months of the filing date of the application.

Any inquiry regarding this decision should be directed to Doris To, Quality Assurance Specialist, at (571) 272-7629.

/Doris To/

Doris To
Quality Assurance Specialist
Technology Center 2600
Communications

D2

UNITED STATES PATENT AND TRADEMARK OFFICE

UNITED STATES DEPARTMENT OF COMMERCE
United States Patent and Trademark Office
Address: COMMISSIONER FOR PATENTS
P.O. Box 1450
Alexandria, Virginia 22313-1450
www.uspto.gov

APPLICATION NO.	FILING DATE	FIRST NAMED INVENTOR	ATTORNEY DOCKET NO.	CONFIRMATION NO.
12/391,285	02/24/2009	Daniel A. Katz		6749

37592 7590 08/12/2009
DANIEL KATZ
87 TZAHAL ST.
KIRYAT-ONO, 55451
ISRAEL

EXAMINER
GHAYOUR, MOHAMMAD H

ART UNIT	PAPER NUMBER
2611	

MAIL DATE	DELIVERY MODE
08/12/2009	PAPER

Please find below and/or attached an Office communication concerning this application or proceeding.

The time period for reply, if any, is set in the attached communication.

United States Patent and Trademark Office

~~Commissioner for Patents~~
United States Patent and Trademark Office
P.O. Box 1450
Alexandria, VA 22313-1450
www.uspto.gov

DANIEL KATZ
87 TZAHAL ST.
KIRYAT-ONO 55451 IL ISRAEL

In re Application of: KATZ, DANIEL A. Serial No.: 12/391,285 Filed: February 24, 2009 Title: **MODULATING TRANSMISSION TIMING FOR DATA COMMUNICATIONS**	DECISION ON PETITION TO MAKE SPECIAL FOR NEW APPLICATION UNDER 37 C.F.R. § 1.102 & M.P.E.P. § 708.02

This is a decision on the petition filed on August 5, 2009 requesting reconsideration to make the above-identified application special for accelerated examination procedure under 37 C.F.R. § 1.102(d).

All of the requirements to correct the deficiencies outlined in the petition decision mailed July 28, 2009 have been met.

The petition to make the application special is **GRANTED**.

The application is eligible for accelerated examination and the petition complies with the conditions for granting the application special status pursuant to the "Change to Practice for Petitions in Patent Applications to Make Special and for Accelerated Examination" published June 26, 2006, in the Federal Register. (71 Fed. Reg. 36323).

The prosecution of the instant application will be conducted expeditiously according to the following guidelines.

1. The application will be docketed to an examiner and taken up for action within two weeks of the date of this decision.

2. Restriction Practice:
   If the examiner determines that the claims are not directed to a single invention, a telephone request to elect one single invention will be made pursuant to MPEP 812.01. As a prerequisite to the grant of this petition, the applicant has agreed to make an oral election, by telephone, without traverse. If the applicant refuses to make an election without traverse, or the examiner cannot reach the applicant after a reasonable effort, the

examiner will treat the first claimed invention (invention defined by claim 1) as having being constructively elected without traverse for examination.

3. Office action:
If it is determined that, after appropriate consultation, there is a potential rejection or any other issue to be addressed, the examiner will telephone the applicant and arrange an interview to discuss and resolve the issue. An Office action, other than a Notice of Allowance and Fee(s) Due (Notice of Allowance), will not be issued unless either: 1) an interview was conducted but did not result in agreed to action that places the application in condition for allowance, or, 2) a determination is made that an interview would be unlikely to result in the application being placed in condition for allowance, and 3) an internal conference has been held to review any rejection of any claim.

4. Time for Reply:
An Office action other than a Notice of Allowance or a final Office action will set a shortened statutory period of one month or thirty days, whichever is longer, for reply with no extension of time available under 37 CFR 1.136(a). Failure to timely file a reply within this non-extendible period for reply will result in the abandonment of the application.

5. Reply by Applicant:
A timely reply to an Office action other than the Notice of Allowance must be submitted electronically via EFS or EFS-web and limited to addressing the rejections, objections and requirement made. Any amendment that attempts to: 1) add claims which would result in more than three pending independent claims or more than twenty pending total claims; 2) present claims not encompassed by the pre-examination search or an updated accelerated examination support document; or 3) present claims that are directed a non-elected invention or an invention other than that previously claimed and examined in the application, will be treated as not fully responsive and will not be entered.

   For any amendment to the claims (including any new claim) that is not encompassed by the accelerated examination support document, applicant must provide an updated accelerated examination support document that encompasses the amended or new claims at the time of filing of the amendment.

   To proceed expeditiously with the examination, it is recommended that a reply with amendments made to any claim or with any new claim being added be accompanied by an updated accelerated examination support document or a statement explaining how the amended or new claim is supported by the original accelerated examination support document.

6. Information Disclosure Statement (IDS):
Any IDS filed during prosecution must be submitted electronically via EFS or EFS-web, accompanied by an updated accelerated examination support document, and be in compliance with 37 CFR 1.97 and 1.98.

7. Post-Allowance Processing:
To expedite processing of the allowed application into a patent, the applicant must: 1) pay the required fees within one month of the date of the Notice of Allowance, and 2) not

file any post allowance papers not required by the Office. In no event may the issue fee be paid and accepted later than three months from the date of the Notice of Allowance.

8. After-Final and Appeal Procedures:
   To expedite prosecution, after receiving the final Office action, applicant must: 1) promptly file a notice of appeal, an appeal brief and appeal fees; and 2) not request a pre-appeal brief conference.

   Any amendment, affidavit or other evidence filed after final Office action must comply with applicable rules and the requirements outlined in numbered paragraphs 5 and 6 above.

   On appeal, the application will proceed according to normal appeal procedures. After appeal, the application will again be treated special.

9. Proceedings Outside the Normal Examination Process:
   If the application becomes involved in a proceeding that is outside the normal examination process (e.g., a secrecy order, national security review, interference proceeding, petitions under 37 CFR 1.181, 182 or 183), the application will be treated special before and after such proceeding.

10. Final Disposition:
    The twelve month goal of this accelerated examination procedure ends with a final disposition. The mailing of a final Office action, a Notice of Allowance, the filing of a Notice of Appeal, or the filing of a Request for Continued Examination (RCE) is the final disposition.

If, during prosecution, a paper is not filed electronically using EFS-web, a reply is filed but is not fully responsive, the application is involved in an appeal or a proceeding outside normal examination process, the application will still be examined expeditiously, however, the final disposition may occur more than twelve months from the filing of the application.

Any inquiry regarding this decision should be directed to Doris To, Quality Assurance Specialist, at (571) 272-7629.

/Doris To/

Doris To
Quality Assurance Specialist
Technology Center 2600
Communications

D.26

UNITED STATES PATENT AND TRADEMARK OFFICE

Commissioner for Patents
United States Patent and Trademark Office
P.O. Box 1450
Alexandria, VA 22313-1450
www.uspto.gov

In re Application of
D.B. Yarbrough

Application No. 12391304

Filed:

Attorney Docket No. 244-01

:DECISION ON PETITION TO MAKE SPECIAL
:UNDER 37 CFR 1.102(c)(1)

This is a decision on the electronic petition under 37 CFR 1.102 (c)(1), filed 25-FEB-2009 to make the above-identified application special based on applicant's age as set forth in MPEP § 708.02, Section IV.

The petition is **GRANTED**.

A grantable petition to make an application special under 37 CFR 1.102(c)(1), MPEP § 708.02, Section IV: Applicant's Age must include a statement by applicant or a registered practitioner having evidence that applicant is at least 65 years of age. No fee is required.

Accordingly, the above-identified application has been accorded "special" status and will be taken up for action by the examiner upon the completion of all pre-examination processing.

Telephone inquiries concerning this electronic decision should be directed to the Electronic Business Center at 866-217-9197.

All other inquiries concerning either the examination or status of the application should be directed to the Technology Center.

UNITED STATES PATENT AND TRADEMARK OFFICE

Commissioner for Patents
United States Patent and Trademark Office
P.O. Box 1450
Alexandria, VA 22313-1450
www.uspto.gov

Yasuhito Yaoita
6-104, 5-21, Haneda
Oota-ku 144-0-043 JP JAPAN

3/17/09

In re Application of	:	
YAOITA, YASUHITO	:	DECISION ON REQUEST TO
Application No. 12/391,309	:	PARTICIPATE IN PATENT
Filed: Feb. 24, 2009	:	PROSECUTION HIGHWAY
Attorney Docket No. n/a	:	PROGRAM AND PETITION
For: ENGINE WITH A SLIDABLE VALVE	:	37 CFR 1.102(d)

This is a decision on the request to participate in the Patent Prosecution Highway (PPH) program and the petition under 37 CFR 1.102(d), filed March 15, 2009 to make the above-identified application special.

The request and petition are **dismissed**.

A grantable request to participate in the PPH pilot program and petition to make special require:

(1) The U.S. application must validly claim priority under 35 U.S.C. 119(a) to one or more applications filed in the JPO;
(2) Applicant must submit a copy of the allowable/patentable claim(s) from the JPO application(s) along with an English translation thereof and a statement that the English translation is accurate;
(3) All the claims in the U.S. application must sufficiently correspond or be amended to sufficiently correspond to the allowable/patentable claim(s) in the JPO application(s);
(4) Examination of the U.S. application has not begun;
(5) Applicant must submit a copy of all the office actions from each of the JPO application(s) containing the allowable/patentable claim(s) along with an English translation thereof and a statement that the English translation is accurate;
(6) Applicant must submit an IDS listing the documents cited by the JPO examiner in the JPO office action along with copies of documents except U.S. patents or U.S. patent application publications; and
(7) The required petition fee under 37 CFR 1.17(h).

The request to participate in the PPH program and petition met all conditions except Items #1, #5 and #6 above. The request to participate in the PPH pilot program and petition fail to include:

1. A validly claim priority under 35 U.S.C. 119(a) to one or more applications filed in the JPO. It is noted that original declaration contains no information and without applicant's signature.

#2. The petition fails to include a copy of all the office actions from each of the JPO application(s) containing the allowable/patentable claim(s) along with an English translation thereof and a statement that the English translation is accurate; and

#3. Applicant fails to submit an IDS listing the documents cited by the JPO examiner in the JPO office action along with copies of documents except U.S. patents or U.S. patent application publications.

However, receipt of eight JPO cited references is acknowledged. They are listed in the IDS filed on March 14, 2009. The applicant is encouraged to cite and submit all relevant prior art references, if any, to facilitate examination in this application.

Applicant is given a time period of **ONE MONTH or THIRTY DAYS**, whichever is longer, from the mailing date of this decision to correct the deficiencies. **NO EXTENSION OF TIME UNDER 37 CFR 1.136 IS PERMITTED.** If the deficiencies are not corrected with the time period given, the application will await action in its regular turn.

Response must be filed via EFS-Web. Telephone inquiries concerning this decision should be directed to Henry C. Yuen, at 571-272-4856.

Henry C. Yuen
Special Programs Examiner
Technology Center 3700
Tel: 571-272-4856

UNITED STATES PATENT AND TRADEMARK OFFICE

Commissioner for Patents
United States Patent and Trademark Office
P.O. Box 1450
Alexandria, VA 22313-1450
www.uspto.gov

Yasuhito Yaoita
6-104, 5-21, Haneda
Oota-ku 144-0-043 JP JAPAN

4/3/09

In re Application of	:	
YAOITA, YASUHITO	:	DECISION ON REQUEST TO
Application No. 12/391,309	:	PARTICIPATE IN PATENT
Filed: Feb. 24, 2009	:	PROSECUTION HIGHWAY
Attorney Docket No. n/a	:	PROGRAM AND PETITION
For: ENGINE WITH A SLIDABLE VALVE	:	37 CFR 1.102(d)

This is a decision on the request to participate in the Patent Prosecution Highway (PPH) program and the petition under 37 CFR 1.102(d), filed March 29, 2009 to make the above-identified application special.

The request and petition are **dismissed**.

A grantable request to participate in the PPH pilot program and petition to make special require:

(1) The U.S. application must validly claim priority under 35 U.S.C. 119(a) to one or more applications filed in the JPO;
(2) Applicant must submit a copy of the allowable/patentable claim(s) from the JPO application(s) along with an English translation thereof and a statement that the English translation is accurate;
(3) All the claims in the U.S. application must sufficiently correspond or be amended to sufficiently correspond to the allowable/patentable claim(s) in the JPO application(s);
(4) Examination of the U.S. application has not begun;
(5) Applicant must submit a copy of all the office actions from each of the JPO application(s) containing the allowable/patentable claim(s) along with an English translation thereof and a statement that the English translation is accurate;
(6) Applicant must submit an IDS listing the documents cited by the JPO examiner in the JPO office action along with copies of documents except U.S. patents or U.S. patent application publications; and
(7) The required petition fee under 37 CFR 1.17(h).

The request to participate in the PPH program and petition met all conditions except Item #6 above. The request to participate in the PPH pilot program and petition fail to include:

A copy of the Japanese Utility Model Applications No. S61-154211 and S60-119046. These patent documents were cited in the corresponding JPO Office action of July 3, 2008.

The applicant is encouraged to cite and submit all relevant prior art references, if any, to facilitate examination in this application.

Applicant is given a time period of **ONE MONTH or THIRTY DAYS**, whichever is longer, from the mailing date of this decision to correct the deficiencies. **NO EXTENSION OF TIME UNDER 37 CFR 1.136 IS PERMITTED.** If the deficiencies are not corrected with the time period given, the application will await action in its regular turn.

Response must be filed via EFS-Web. Telephone inquiries concerning this decision should be directed to Henry C. Yuen, at 571-272-4856.

Henry C. Yuen
Special Programs Examiner
Technology Center 3700
Tel: 571-272-4856

UNITED STATES PATENT AND TRADEMARK OFFICE

Commissioner for Patents
United States Patent and Trademark Office
P.O. Box 1450
Alexandria, VA 22313-1450
www.uspto.gov

THOMPSON COBURN LLP
ONE US BANK PLAZA
SUITE 3500
ST LOUIS MO 63101

COPY MAILED
MAR 1 1 2010

In re Application of	:	
Kutchan, et al.	:	
Application No. 12/391,343	:	DECISION ON PETITION
Filed: 24 February, 2009	:	
Attorney Docket No. 47004-81451	:	

This is a decision on the petition filed on 14 August, 2009, requesting correction of the name of the inventor/applicant, and considered for relief under 37 C.F.R §1.182.

The petition under 37 C.F.R §1.182 is **DISMISSED**.

It is noted that Petitioner did not include with the petition and fee the required declaration by the inventor/applicant, signed in both forms of the inventor/applicant's name—that averred to have been incorrect and that averred to be correct.

The guidance in the Commentary set forth at MPEP§605.04(c) suggests to Petitioner the proper procedure herein:

> **605.04(c)Inventor Changes Name [R-5]**
>
> In cases where an inventor's name has been changed after the application has been filed and the inventor desires to change his or her name on the application, he or she must submit a petition under 37 CFR 1.182. Applicants are also strongly encouraged to submit an application data sheet (37 CFR 1.76) showing the new name. The petition should be directed to the attention of the Office of Petitions. The petition must include an appropriate petition fee and **>a statement< signed by the inventor setting forth both names and the procedure whereby the change of name was effected, or a * copy of the court order.

> Since amendments are not permitted after the payment of the issue fee (37 CFR 1.312), a petition under 37 CFR 1.182 to change the name of the inventor cannot be granted if filed after the payment of the issue fee.
>
> If an application data sheet is not submitted, the petition may still be granted, but the patent may not reflect the correct spelling of the inventor's name.
>
> If the petition is granted, if the application is maintained in paper with a file jacket label (i.e., the application is an 08/ or earlier series application), the original declaration must be marked in red ink, in the left margin "See paper No. _ for correction of inventor name" and the application should be sent to the Office of Initial Patent Examination (OIPE) for change of name on the file wrapper and in the PALM database. If the petition is granted in an Image File Wrapper (IFW) application or if the application is an 09/ or later series application, the spelling of the inventor's name should be changed in the Office computer records and a new PALM bib-data sheet should be printed. If the application is assigned, applicant should submit a corrected assignment document along with a cover sheet and the recording fee as set forth in 37 CFR 1.21(h) to the Assignment Division for a change in the assignment record. (Emphasis supplied)

BACKGROUND

A search of the file indicates that:

The instant application was filed, Petitioner indicates, with an earlier form as to a co-inventor's name—the name having been typed and signed in that form. (Petitioner states that it was "Stefanie Haase" but is now Stefanie Haase-Fernando.

Petitioner has submitted no updated application data sheet (ADS), the latter of which may not be required but should be included.

Moreover, Petitioner did not include with the petition and fee the required declaration by the inventor/applicant, signed in both forms of the inventor/applicant's name—that averred to have been incorrect and that averred to be correct.

More to the point, however, is that it appears that Office records already have captured and incorporated the change in the name of the co-inventor and that a filing receipt reflecting that change has been mailed.

The availability of applications and application papers online to applicants/practitioners who diligently associate their Customer Number with the respective application(s) now provides an

applicant/practitioner on-demand information as to events/transactions in an application. Thus, now if one wishes to know the progress in and/or status of an application or the accuracy of the data therein, one need only look at the file online.

Out of an abundance of caution, Petitioners always are reminded that those registered to practice *and* all others who make representations before the Office must inquire into the underlying facts of representations made to the Office and support averments with the appropriate documentation–since all owe to the Office the continuing duty to disclose.[1]

CONCLUSION

Accordingly, the petition under 37 C.F.R. §1.182 is **dismissed as moot**.

Telephone inquiries regarding this decision may be directed to the undersigned at (571) 272-3214—it is noted, however, that all practice before the Office is in writing (see: 37 C.F.R. §1.2[2]) and the proper authority for action on any matter in this regard are the statutes (35 U.S.C.), regulations (37 C.F.R.) and the commentary on policy (MPEP). Therefore, no telephone discussion may be controlling or considered authority for Petitioner's action(s).

/John J. Gillon, Jr./
John J. Gillon, Jr.
Senior Attorney
Office of Petitions

---

[1] See supplement of 17 June, 1999. The Patent and Trademark Office is relying on petitioner's duty of candor and good faith and accepting a statement made by Petitioner. See Changes to Patent Practice and Procedure, 62 Fed. Reg. at 53160 and 53178, 1203 Off. Gaz. Pat. Office at 88 and 103 (responses to comments 64 and 109)(applicant obligated under 37 C.F.R. §10.18 to inquire into the underlying facts and circumstances when providing statements to the Patent and Trademark Office). See specifically, the regulations at 37 C.F.R. §10.18.

[2] The regulations at 37 C.F.R. §1.2 provide:
§1.2 Business to be transacted in writing.
All business with the Patent and Trademark Office should be transacted in writing. The personal attendance of Petitioners or their attorneys or agents at the Patent and Trademark Office is unnecessary. The action of the Patent and Trademark Office will be based exclusively on the written record in the Office. No attention will be paid to any alleged oral promise, stipulation, or understanding in relation to which there is disagreement or doubt.

UNITED STATES PATENT AND TRADEMARK OFFICE

UNITED STATES DEPARTMENT OF COMMERCE
United States Patent and Trademark Office
Address: COMMISSIONER FOR PATENTS
P.O. Box 1450
Alexandria, Virginia 22313-1450
www.uspto.gov

APPLICATION NO.	FILING DATE	FIRST NAMED INVENTOR	ATTORNEY DOCKET NO.	CONFIRMATION NO.
12/391,434	02/24/2009	Mark M. Kowalski	08-368-US	7014

20306 7590 03/31/2009
MCDONNELL BOEHNEN HULBERT & BERGHOFF LLP
300 S. WACKER DRIVE
32ND FLOOR
CHICAGO, IL 60606

EXAMINER

ART UNIT	PAPER NUMBER
1614	

MAIL DATE	DELIVERY MODE
03/31/2009	PAPER

Please find below and/or attached an Office communication concerning this application or proceeding.

The time period for reply, if any, is set in the attached communication.

UNITED STATES PATENT AND TRADEMARK OFFICE

Commissioner for Patents
United States Patent and Trademark Office
P.O. Box 1450
Alexandria, VA 22313-1450
www.uspto.gov

MAR 3 1 2009

20306
MCDONNELL BOEHNEN HULBERT & BERGHOFF LLP
300 S. WACKER DRIVE
32 ND FLOOR
CHICAGO, IL 60606

In re Application of:	
Kowalski et al	:
Serial No.: 12/391,434	: DECISION
Filed: February 24, 2009	: ON
Docket: 08-368-US	: Petition under
Title: Method of Treating Post-Surgical Acute Pain	: 37 CFR 1.102(d)
	:

This is a decision on the petition filed on February 24, 2009 to make the above-identified application special for accelerated examination procedure under 37 C.F.R. § 1.102(d).

The petition to make the application special is GRANTED.

The application is eligible for accelerated examination and the petition complies with the conditions for granting the application special status pursuant to the "Change to Practice for Petitions in Patent Applications to Make Special and for Accelerated Examination" published June 26, 2006, in the Federal Register. (71 Fed. Reg. 36323).

The prosecution of the instant application will be conducted expeditiously according to the following guidelines.

1. The application will be docketed to an examiner and taken up for action within two weeks of the date of this decision.

2. Restriction Practice:
   If the examiner determines that the claims are not directed to a single invention, a telephone request to elect one single invention will be made pursuant to MPEP 812.01. As a prerequisite to the grant of this petition, the applicant has agreed to make an oral election, by telephone, without traverse. If the applicant refuses to make an election without traverse, or the examiner cannot reach the applicant after a reasonable effort, the examiner will treat the first claimed invention (invention defined by claim 1) as having being constructively elected without traverse for examination. Office action:

If it is determined that, after appropriate consultation, there is a potential rejection or any other issue to be addressed, the examiner will telephone the applicant and arrange an interview to discuss and resolve the issue. An Office action, other than a Notice of Allowance and Fee(s) Due (Notice of Allowance), will not be issued unless either: 1) an interview was conducted but did not result in agreed to action that places the application in condition for allowance, or, 2) a determination is made that an interview would be unlikely to result in the application being placed in condition for allowance, and 3) an internal conference has been held to review any rejection of any claim.

3. Time for Reply:
An Office action other than a Notice of Allowance or a final Office action will set a shortened statutory period of one month or thirty days, whichever is longer, for reply with no extension of time available under 37 CFR 1.136(a). Failure to timely file a reply within this non-extendible period for reply will result in the abandonment of the application.

4. Reply by Applicant:
A timely reply to an Office action other than the Notice of Allowance must be submitted electronically via EFS or EFS-web and limited to addressing the rejections, objections and requirement made. Any amendment that attempts to: 1) add claims which would result in more than three pending independent claims or more than twenty pending total claims; 2) present claims not encompassed by the pre-examination search or an updated accelerated examination support document; or 3) present claims that are directed a non-elected invention or an invention other than that previously claimed and examined in the application, will be treated as not fully responsive and will not be entered.

   For any amendment to the claims (including any new claim) that is not encompassed by the accelerated examination support document, applicant must provide an updated accelerated examination support document that encompasses the amended or new claims at the time of filing of the amendment.

   To proceed expeditiously with the examination, it is recommended that a reply with amendments made to any claim or with any new claim being added be accompanied by an updated accelerated examination support document or a statement explaining how the amended or new claim is supported by the original accelerated examination support document.

5. Information Disclosure Statement (IDS):
Any IDS filed during prosecution must be submitted electronically via EFS or EFS-web, accompanied by an updated accelerated examination support document, and be in compliance with 37 CFR 1.97 and 1.98.

6. Post-Allowance Processing:
   To expedite processing of the allowed application into a patent, the applicant must: 1) pay the required fees within one month of the date of the Notice of Allowance, and 2) not file any post allowance papers not required by the Office. In no event may the issue fee be paid and accepted later than three months from the date of the Notice of Allowance.

7. After-Final and Appeal Procedures:
   To expedite prosecution, after receiving the final Office action, applicant must: 1) promptly file a notice of appeal, an appeal brief and appeal fees; and 2) not request a pre-appeal brief conference.

   Any amendment, affidavit or other evidence filed after final Office action must comply with applicable rules and the requirements outlined in numbered paragraphs 5 and 6 above.

   On appeal, the application will proceed according to normal appeal procedures. After appeal, the application will again be treated special.

8. Proceedings Outside the Normal Examination Process:
   If the application becomes involved in a proceeding that is outside the normal examination process (e.g., a secrecy order, national security review, interference proceeding, petitions under 37 CFR 1.181, 182 or 183), the application will be treated special before and after such proceeding.

9. Final Disposition:
   The twelve month goal of this accelerated examination procedure ends with a final disposition. The mailing of a final Office action, a Notice of Allowance, the filing of a Notice of Appeal, or the filing of a Request for Continued Examination (RCE) is the final disposition.

If, during prosecution, a paper is not filed electronically using EFS-web, a reply is filed but is not fully responsive, the application is involved in an appeal, or a proceeding outside normal examination process, the application will still be examined expeditiously, however, the final disposition may occur more than twelve months from the filing of the application.

Any inquiry regarding this decision should be directed to Me, Special Program Examiner, at (571) 272-0562.

Cecilia Tsang

Cecilia Tsang, SPE, Art Unit 1654
Technology Center 1600

UNITED STATES PATENT AND TRADEMARK OFFICE

Commissioner for Patents
United States Patent and Trademark Office
P.O. Box 1450
Alexandria, VA 22313-1450
www.uspto.gov

LERNER, DAVID, LITTENBERG,
KRUMHOLZ & MENTLIK
600 SOUTH AVENUE WEST
WESTFIELD NJ 07090

COPY MAILED

JUN 05 2009

OFFICE OF PETITIONS

In re Application of	:	
Sinha et al.	:	
Application No. 12/391490	:	
Filing or 371(c) Date: 02/24/2009	:	
Attorney Docket Number:	:	DECISION
RENWIR 3.0-003	:	ON PETITION

This is a decision on the "Petition to Establish Prior Receipt in the P.T.O. of Item(s) Considered as Omitted by the P.T.O. – Response to Notice of Incomplete Nonprovisional Application," filed March 12, 2009. The petition is properly treated under 37 C.F.R. §1.57(a).

The petition is dismissed.

Background

Application papers in the above-identified application were deposited on February 24, 2009. On March 10, 2009, the Office of Patent Application Processing mailed Applicants a "Notice of Incomplete Nonprovisional Application," notifying Applicants that the application papers had NOT been accorded a filing date because the specification, including the claims, was missing. In response, Applicants timely filed this petition. Applicants request that this Office accord the application as filing date based upon a benefit claim to provisional application no. 60/067,192. Applicants assert that "[t]he application is hereby amended to include the prior filed provisional application (Serial Number 61/067192) specification in its entirety. A copy of the provisional application (Serial Number 60/067192), downloaded from the USPTO Website, is attached to this petition as required by 37 CFR 1.57(a)(1)(i)." A review of the petition papers filed on March 12, 2009 reveal that no separately-filed Amendment to add the inadvertently omitted specification, including the claims, has been filed with the petition.

Petition under 37 CFR 1.57(a)

37 CFR § 1.57, Incorporation by reference, states:

(a) Subject to the conditions and requirements of this paragraph, if all or a portion of

the specification or drawing(s) is inadvertently omitted from an application, but the application contains a claim under § 1.55 for priority of a prior-filed foreign application, or a claim under § 1.78 for the benefit of a prior-filed provisional, nonprovisional, or international application, that was present on the filing date of the application, and the inadvertently omitted portion of the specification or drawing(s) is completely contained in the prior-filed application, the claim under § 1.55 or § 1.78 shall also be considered an incorporation by reference of the prior-filed application as to the inadvertently omitted portion of the specification or drawing(s).

(1) The application must be amended to include the inadvertently omitted portion of the specification or drawing(s) within any time period set by the Office, but in no case later than the close of prosecution as defined by § 1.114(b), or abandonment of the application, whichever occurs earlier. The applicant is also required to:

(i) Supply a copy of the prior-filed application, except where the prior-filed application is an application filed under 35 U.S.C. 111;

(ii) Supply an English language translation of any prior-filed application that is in a language other than English; and

(iii) Identify where the inadvertently omitted portion of the specification or drawings can be found in the prior-filed application.

Analysis

A review of the petition papers filed on March 12, 2009 reveal that no separately-filed Amendment to add the inadvertently omitted specification has been filed with the petition. In this regard, the amendment is physically part of the petition and, as such, does not comply with 37 CFR §§ 1.121, or 1.4(c). Note that 37 CFR 1.121 states that amendments are made by filing a paper, in compliance with § 1.52, directing that specified amendments be made. 37 CFR 1.4(c) states that each distinct subject must be contained in a separate paper since different matters may be considered by different branches of the United States Patent and Trademark Office.

Applicant has failed to amend the application to include the inadvertently omitted specification as required by 37 CFR 1.57(a)(1).

Conclusion

The petition is dismissed without prejudice. Applicant must file an Amendment to the application to include the inadvertently omitted specification, including the claims.

Telephone inquiries concerning this matter should be directed to Attorney Derek Woods at (571) 272-3232.

Anthony Knight
Supervisor
Office of Petitions

UNITED STATES PATENT AND TRADEMARK OFFICE

Commissioner for Patents
United States Patent and Trademark Office
P.O. Box 1450
Alexandria, VA 22313-1450
www.uspto.gov

LERNER, DAVID, LITTENBERG,
KRUMHOLZ & MENTLIK
600 SOUTH AVENUE WEST
WESTFIELD NJ 07090

MAILED

JUN 18 2009

OFFICE OF PETITIONS

In re Application of	:	
Sinha et al.	:	
Application No. 12/391490	:	
Filing or 371(c) Date: 02/24/2009	:	
Attorney Docket Number:	:	DECISION
RENWIR 3.0-003	:	ON PETITION

This is a decision on the "Renewed Petition to Establish Prior Receipt in the P.T.O. of Item(s) Considered as Omitted by the P.T.O. – Response to Notice of Incomplete Nonprovisional Application," filed June 10, 2009. The renewed petition is properly treated under 37 C.F.R. §1.57(a).

The petition is **granted to the extent indicated below**.

Background

Application papers in the above-identified application were deposited on February 24, 2009. On March 10, 2009, the Office of Patent Application Processing mailed Applicants a "Notice of Incomplete Nonprovisional Application," notifying Applicants that the application papers had NOT been accorded a filing date because the specification, including the claims, was missing. In response, Applicants timely filed this petition. Applicants request that this Office accord the application as filing date based upon a benefit claim to provisional application no. 61/067,192. Applicants assert that "[t]he application is hereby amended to include the prior filed provisional application (Serial Number 61/067192) specification in its entirety. A copy of the provisional application (Serial Number 61/067192), downloaded from the USPTO Website, is attached to this petition as required by 37 CFR 1.57(a)(1)(i)." A review of the petition papers filed on March 12, 2009 reveal that no separately-filed Amendment to add the inadvertently omitted specification, including the claims, has been filed with the petition.

The petition was dismissed in a Decision mailed June 5, 2009. The Decision dismissing the petition required an Amendment to add the inadvertently omitted material in accordance with 37 CFR 1.57(a).

The present renewed petition

Applicant files the present renewed petition and an Amendment to add the inadvertently omitted material.

Applicable Law, Rules and MPEP

Petition under 37 CFR 1.57(a)

37 CFR § 1.57, Incorporation by reference, states:

> (a) Subject to the conditions and requirements of this paragraph, if all or a portion of the specification or drawing(s) is inadvertently omitted from an application, but the application contains a claim under § 1.55 for priority of a prior-filed foreign application, or a claim under § 1.78 for the benefit of a prior-filed provisional, nonprovisional, or international application, that was present on the filing date of the application, and the inadvertently omitted portion of the specification or drawing(s) is completely contained in the prior-filed application, the claim under § 1.55 or § 1.78 shall also be considered an incorporation by reference of the prior-filed application as to the inadvertently omitted portion of the specification or drawing(s).
>
> (1) The application must be amended to include the inadvertently omitted portion of the specification or drawing(s) within any time period set by the Office, but in no case later than the close of prosecution as defined by § 1.114(b), or abandonment of the application, whichever occurs earlier. The applicant is also required to:
>
> (i) Supply a copy of the prior-filed application, except where the prior-filed application is an application filed under 35 U.S.C. 111;
>
> (ii) Supply an English language translation of any prior-filed application that is in a language other than English; and
>
> (iii) Identify where the inadvertently omitted portion of the specification or drawings can be found in the prior-filed application.

Analysis

A review of the application papers filed on February 24, 2009, reveals that Applicants filed an Application Data Sheet "(ADS") claiming benefit to provisional application no. 61/067,192, filed February 25, 2008. Therefore, based upon applicant's incorporation by reference of the contents of the provisional application on filing of the present application, a filing date of February 24,

2009, may be accorded the present application. Applicant has filed a preliminary amendment to add the inadvertently omitted material with the present renewed petition on June 10, 2009.

Conclusion

This application is being referred to the Office of Patent Application Processing for further processing, with the filing date of February 24, 2009, using the application papers present on that date.

Telephone inquiries concerning this matter should be directed to Attorney Derek Woods at (571) 272-3232.

Anthony Knight
Supervisor
Office of Petitions

UNITED STATES PATENT AND TRADEMARK OFFICE

UNITED STATES DEPARTMENT OF COMMERCE
United States Patent and Trademark Office
Address: COMMISSIONER FOR PATENTS
P.O. Box 1450
Alexandria, Virginia 22313-1450
www.uspto.gov

APPLICATION NO.	FILING DATE	FIRST NAMED INVENTOR	ATTORNEY DOCKET NO.	CONFIRMATION NO.
12/391,550	02/24/2009	Yasuhiro MORIOKA	04329.4455	7219

22852 7590 11/12/2009
FINNEGAN, HENDERSON, FARABOW, GARRETT & DUNNER LLP
901 NEW YORK AVENUE, NW
WASHINGTON, DC 20001-4413

EXAMINER
HWANG, JOON H

ART UNIT	PAPER NUMBER
2447	

MAIL DATE	DELIVERY MODE
11/12/2009	PAPER

Please find below and/or attached an Office communication concerning this application or proceeding.

The time period for reply, if any, is set in the attached communication.

UNITED STATES PATENT AND TRADEMARK OFFICE

Commissioner for Patents
United States Patent and Trademark Office
P.O. Box 1450
Alexandria, VA 22313-1450
www.uspto.gov

FINNEGAN, HENDERSON, FARABOW, GARRETT & DUNNER LLP
901 NEW YORK AVENUE, NW
WASHINGTON DC 20001-4413

In re Application of: Yasuhiro Morioka
Application No. 12391550
Filed: February 24, 2009
For: **CONTENT TRANSMISSION APPARATUS, CONTENT RECEPTION APPARATUS, AND CONTENT UPLOAD METHOD**

DECISION ON REQUEST TO PARTICIPATE IN PATENT PROSECUTION HIGHWAY PROGRAM AND PETITION TO MAKE SPECIAL UNDER 37 CFR 1.102(d)

MAILED

NOV 12 2009

DIRECTOR OFFICE
TECHNOLOGY CENTER 2400

This is a decision on the request to participate in the Patent Prosecution Highway (PPH) program and the petition under 37 CFR 1.102(d), filed October 30, 2009, to make the above-identified application special.

The petition is **DISMISSED.**

A grantable request to participate in the PPH program and petition to make special require:

(1) The U.S. application must validly claim priority under 35 U.S.C. 119(a) to one or more applications filed in the JPO;

(2) Applicant must submit a copy of the allowable/patentable claim(s) from the JPO application(s) along with an English translation thereof and a statement that the English translation is accurate;

(3) All the claims in the U.S. application must sufficiently correspond or be amended to sufficiently correspond to the allowable/patentable claim(s) in the JPO application(s);

(4) Examination of the U.S. application has not begun;

(5) Applicant must submit a copy of all the office actions from each of the JPO application(s) containing the allowable/patentable claim(s) along with an English translation thereof and a statement that the English translation is accurate;

(6) Applicant must submit an IDS listing the documents cited by the JPO examiner in the KIPO office action along with copies of documents except U.S. patents or U.S. patent application publications; and

(7) The required petition fee under 37 CFR 1.17(h).

The request to participate in the PPH program and petition failed to meet the requirements of item (5) above because copies of the JPO Office actions and their English translations are missing.

Accordingly, the Petition is **DISMISSED**.

Applicant is given a time period of ONE MONTH or THIRTY DAYS, whichever is longer, to correct the deficiencies. NO EXTENSION OF TIME UNDER 37 CFR 1.136 IS PERMITTED.

If the deficiencies are not corrected with the time period given, the application will await action in its regular turn.

Responses must be submitted by EFS-Web using the document description "Petition to make special under Pat Pros Hwy".

Telephone inquiries concerning this decision should be directed to Hassan Kizou at 571-272-3088

All other inquiries concerning the examination or status of the application is accessible in the PAIR system at http://www.uspto.gov/ebc/index.html.

Hassan Kizou
Quality Assurance Specialist
Technology Center 2400

UNITED STATES PATENT AND TRADEMARK OFFICE

UNITED STATES DEPARTMENT OF COMMERCE
United States Patent and Trademark Office
Address: COMMISSIONER FOR PATENTS
P.O. Box 1450
Alexandria, Virginia 22313-1450
www.uspto.gov

APPLICATION NO.	FILING DATE	FIRST NAMED INVENTOR	ATTORNEY DOCKET NO.	CONFIRMATION NO.
12/391,550	02/24/2009	Yasuhiro MORIOKA	04329.4455	7219

22852 7590 12/04/2009
FINNEGAN, HENDERSON, FARABOW, GARRETT & DUNNER LLP
901 NEW YORK AVENUE, NW
WASHINGTON, DC 20001-4413

EXAMINER
HWANG, JOON H

ART UNIT	PAPER NUMBER
2447	

MAIL DATE	DELIVERY MODE
12/04/2009	PAPER

Please find below and/or attached an Office communication concerning this application or proceeding.

The time period for reply, if any, is set in the attached communication.

UNITED STATES PATENT AND TRADEMARK OFFICE

MAILED

DEC 04 2009

DIRECTOR OFFICE
TECHNOLOGY CENTER 2400

Commissioner for Patents
United States Patent and Trademark Office
P.O. Box 1450
Alexandria, VA 22313-1450
www.uspto.gov

FINNEGAN, HENDERSON, FARABOW, GARRETT & DUNNER LLP
901 NEW YORK AVENUE, NW
WASHINGTON DC 20001-4413

In re Application of: Yasuhiro Morioka
Application No. 12391550
Filed: February 24, 2009
For: **CONTENT TRANSMISSION APPARATUS, CONTENT RECEPTION APPARATUS, AND CONTENT UPLOAD METHOD**

DECISION ON REQUEST TO PARTICIPATE IN PATENT PROSECUTION HIGHWAY PROGRAM AND PETITION TO MAKE SPECIAL UNDER 37 CFR 1.102(d)

This is a decision on the renewed request to participate in the Patent Prosecution Highway (PPH) program and the petition under 37 CFR 1.102(d), filed November 30, 2009, to make the above-identified application special.

The petition is **GRANTED.**

A grantable request to participate in the PPH program and petition to make special require:

(1) The U.S. application must validly claim priority under 35 U.S.C. 119(a) to one or more applications filed in the JPO;

(2) Applicant must submit a copy of the allowable/patentable claim(s) from the JPO application(s) along with an English translation thereof and a statement that the English translation is accurate;

(3) All the claims in the U.S. application must sufficiently correspond or be amended to sufficiently correspond to the allowable/patentable claim(s) in the JPO application(s);

(4) Examination of the U.S. application has not begun;

(5) Applicant must submit a copy of all the office actions from each of the JPO application(s) containing the allowable/patentable claim(s) along with an English translation thereof and a statement that the English translation is accurate;

(6) Applicant must submit an IDS listing the documents cited by the JPO examiner in the KIPO office action along with copies of documents except U.S. patents or U.S. patent application publications; and

(7) The required petition fee under 37 CFR 1.17(h).

The original request to participate in the PPH program and petition was dismissed because of failure to meet the requirements of item (5), as copies of the JPO Office actions and their English translations were missing. Petitioner has timely submitted the missing documents in response to the previous decision mailed November 12, 2009.

The request to participate in the PPH program and petition are now in compliance with the above requirements. Accordingly, the above-identified application has been accorded "special" status.

Telephone inquiries concerning this decision should be directed to Hassan Kizou at 571-272-3088

All other inquiries concerning the examination or status of the application is accessible in the PAIR system at http://www.uspto.gov/ebc/index.html.

The application is being forwarded to the examiner for action on the merits commensurate with this decision.

Hassan Kizou
Quality Assurance Specialist
Technology Center 2400

UNITED STATES PATENT AND TRADEMARK OFFICE

Commissioner for Patents
United States Patent and Trademark Office
P.O. Box 1450
Alexandria, VA 22313-1450
www.uspto.gov

HAMILTON IP LAW, PC
331 W. 3RD ST.
NEW VENTURES CENTER SUITE 120
DAVENPORT IA 52801

MAILED

APR 21 2009

OFFICE OF PETITIONS

In re Application of	:	
James ORR	:	
Application No. 12/391,684	:	DECISION ON PETITION
Filed: February 24, 2009	:	TO MAKE SPECIAL UNDER
Attorney Docket No. **USPA-0320 DIV**	:	37 CFR 1.102(c)(1)
	:	

This is a decision on the petition under 37 CFR 1.102(c)(1), filed March 03, 2009, to make the above-identified application special based on applicant's age as set forth in M.P.E.P. § 708.02, Section IV.

The petition is **GRANTED**.

A grantable petition to make an application special under 37 CFR 1.102(c)(1) and MPEP § 708.02, Section IV: Applicant's Age must be accompanied by evidence showing that at least one of the applicants is 65 years of age, or more, such as a birth certificate or a statement by applicant. No fee is required

The instant petition includes a statement by James Orr, attesting to his age. Accordingly, the above-identified application has been accorded "special" status.

Telephone inquiries concerning this decision should be directed to Tredelle Jackson at 571-272-2783.

All other inquiries concerning either the examination or status of the application should be directed to the Technology Center.

The application is being forwarded to the Technology Center Art Unit 3635 for action on the merits commensurate with this decision.

Tredelle D. Jackson
Paralegal Specialist
Office of Petitions

UNITED STATES PATENT AND TRADEMARK OFFICE

UNITED STATES DEPARTMENT OF COMMERCE
United States Patent and Trademark Office
Address: COMMISSIONER FOR PATENTS
P.O. Box 1450
Alexandria, Virginia 22313-1450
www.uspto.gov

APPLICATION NO.	FILING DATE	FIRST NAMED INVENTOR	ATTORNEY DOCKET NO.	CONFIRMATION NO.
12/391,688	02/24/2009	Brad Chamberlin	D-301	7474

23413 7590 02/24/2010
CANTOR COLBURN, LLP
20 Church Street
22nd Floor
Hartford, CT 06103

EXAMINER
RAEVIS, ROBERT R

ART UNIT	PAPER NUMBER
2856	

NOTIFICATION DATE	DELIVERY MODE
02/24/2010	ELECTRONIC

Please find below and/or attached an Office communication concerning this application or proceeding.

The time period for reply, if any, is set in the attached communication.

Notice of the Office communication was sent electronically on above-indicated "Notification Date" to the following e-mail address(es):

usptopatentmail@cantorcolburn.com

UNITED STATES PATENT AND TRADEMARK OFFICE

Commissioner for Patents
United States Patent and Trademark Office
P.O. Box 1450
Alexandria, VA 22313-1450
www.uspto.gov

CANTOR COLBURN, LLP
20 Church Street
22nd Floor
Hartford CT 06103

In re Application of	:	
CHAMBERLIN et al.	:	DECISION ON PETITION
Application No. 12/391,688	:	TO MAKE SPECIAL UNDER
Filed: 24 February 2009	:	THE GREEN TECHNOLOGY
Attorney Docket No. D-301	:	PILOT PROGRAM

This is a decision on the petition under 37 CFR 1.102, filed 12 February 2010, to make the above-identified application special under the pilot program for applications pertaining to Green Technologies as set forth 74 Federal Register Notice 64666 (December 8, 2009).

The petition is **DISMISSED**.

If reconsideration of this decision is desired, a petition for reconsideration must be filed within ONE (1) MONTH OR THIRTY (30) DAYS from the mail date of this decision, whichever is longer. No extension of this time limit can be granted under 37 CFR 1.136(a) or (b). The petition for reconsideration should include an exhaustive attempt to provide the lacking item(s) noted below, since, after a decision on the petition for reconsideration, no further reconsideration or review of the matter will be undertaken by the Director.

A grantable petition to make an application special under 37 CFR 1.102 and the pilot program as set forth in 74 FR 64666 must be directed to a nonprovisional application filed under 35 USC 111(a) or be a national stage entry under 35 USC 371, exclusive of any reissue applications and be filed prior to the date of the notice, December 8, 2009.

In order to qualify for special status, the following requirements must be met. 1) The application must be classified in one of the eligible US classifications listed in section VI of the notice. 2) The application must have no more than 3 independent claims and no more than 20 total claims. 3) The application must not contain any multiple dependent claims. 4) The petition must state the basis for seeking special status, i.e., the claimed invention either: A) materially enhances the quality of the environment or B) materially contributes to: i) the discovery or development of renewable energy resources, ii) the more efficient utilization and conservation of energy resources, or iii) greenhouse gas emission reduction. 5) If the disclosure is not clear on its face that the claimed invention materially contributes under category (A) or (B), the petition must be accompanied by a statement by the applicant, assignee, or an attorney/agent registered to practice before the Office explaining how the materiality standard is met. 6) A statement that applicant

will agree to make an election without traverse in a telephonic interview if a restriction requirement is made by the examiner. 7) The petition to make special must be filed electronically. 8) The petition must be filed at least one day prior to the date that a first Office Action appears in the Patent Application Information Retrieval (PAIR) system. 9) The petition must be accompanied by a request for early publication in compliance with 37 CFR 1.219 and include the publication fee as set forth in 37 CFR 1.18(d).

The requirement for a fee for consideration of the petition to make special for applications pertaining to Green Technologies has been waived.

The petition lacks item 1 above.

In regard to item 1, petitioner should note that this application has been docketed in USPC 73/866.5 which is not one of the eligible US classifications listed in section VI of the notice. Therefore, this application is not eligible for the Pilot Program. The classification limitations are purposefully made to be narrow for the Pilot Program; however, these may be expanded based upon the success of the Pilot Program. Petitioner may file a preliminary amendment that would cause this application to be classified elsewhere. However, while petitioner may suggest a classification (see, e.g., MPEP 708.02(a)(VII)(C)), the application will be assigned to the most appropriate classification based upon current U.S. classification guidelines. Furthermore, a petition for the Pilot Program should not be filed until and unless all of the requirements set forth in the Notice are met; i.e., a petition should not be filed for an application that is currently classified outside the eligible classifications set forth in the Notice.

Any reconsideration of this decision should be submitted through the USPTO electronic filing system, EFS-Web, and selecting the document description of "Petition for Green Tech Pilot" on the EFS-Web screen.

Telephone inquires concerning this decision should be directed to Lee W. Young at 571-272-4549.

The application is being forwarded to the Technology Center Art Unit 2856 for action on the merits commensurate with this decision.

Lee W. Young
Quality Assurance Specialist
Technology Center 2800

UNITED STATES PATENT AND TRADEMARK OFFICE

UNITED STATES DEPARTMENT OF COMMERCE
United States Patent and Trademark Office
Address: COMMISSIONER FOR PATENTS
P.O. Box 1450
Alexandria, Virginia 22313-1450
www.uspto.gov

APPLICATION NO.	FILING DATE	FIRST NAMED INVENTOR	ATTORNEY DOCKET NO.	CONFIRMATION NO.
12/391,688	02/24/2009	Brad Chamberlin	D-301	7474

23413 7590 07/09/2010
CANTOR COLBURN, LLP
20 Church Street
22nd Floor
Hartford, CT 06103

EXAMINER
RAEVIS, ROBERT R

ART UNIT	PAPER NUMBER
2856	

NOTIFICATION DATE	DELIVERY MODE
07/09/2010	ELECTRONIC

Please find below and/or attached an Office communication concerning this application or proceeding.

The time period for reply, if any, is set in the attached communication.

Notice of the Office communication was sent electronically on above-indicated "Notification Date" to the following e-mail address(es):

usptopatentmail@cantorcolburn.com

UNITED STATES PATENT AND TRADEMARK OFFICE

Commissioner for Patents
United States Patent and Trademark Office
P.O. Box 1450
Alexandria, VA 22313-1450
www.uspto.gov

CANTOR COLBURN, LLP
20 Church Street
22nd Floor
Hartford CT 06103

In re Application of	:	
CHAMBERLIN et al.	:	DECISION ON PETITION
Application No. 12/391,688	:	TO MAKE SPECIAL UNDER
Filed: 24 February 2009	:	THE GREEN TECHNOLOGY
Attorney Docket No. D-301	:	PILOT PROGRAM

This is a decision on the petition under 37 CFR 1.102, filed on 12 February 2010 and renewed on 11 June 2010, to make the above-identified application special under the pilot program for applications pertaining to Green Technologies as set forth 74 Federal Register Notice 64666 (December 8, 2009) and amended by 75 Federal Register Notice 28554 (May 21, 2010).

The petition is **DISMISSED**.

If reconsideration of this decision is desired, a petition for reconsideration must be filed within ONE (1) MONTH OR THIRTY (30) DAYS from the mail date of this decision, whichever is longer. No extension of this time limit can be granted under 37 CFR 1.136(a) or (b). The petition for reconsideration should include an exhaustive attempt to provide the lacking item(s) noted below, since, after a decision on the petition for reconsideration, no further reconsideration or review of the matter will be undertaken by the Director.

A grantable petition to make an application special under 37 CFR 1.102 and the pilot program as set forth in 74 FR 64666 must be directed to a nonprovisional application filed under 35 USC 111(a) or be a national stage entry under 35 USC 371, exclusive of any reissue applications and be filed prior to the date of the notice, December 8, 2009.

In order to qualify for special status, the following requirements must be met. 1) The application must have no more than 3 independent claims and no more than 20 total claims. 2) The application must not contain any multiple dependent claims. 3) The petition must state the basis for seeking special status, i.e., the claimed invention either: A) materially enhances the quality of the environment or B) materially contributes to: i) the discovery or development of renewable energy resources, ii) the more efficient utilization and conservation of energy resources, or iii) greenhouse gas emission reduction. 4) If the disclosure is not clear on its face that the claimed invention materially contributes under category (A) or (B), the petition must be accompanied by a statement by the applicant, assignee, or an attorney/agent registered to practice before the

Office explaining how the materiality standard is met. 5) A statement that applicant will agree to make an election without traverse in a telephonic interview if a restriction requirement is made by the examiner. 6) The petition to make special must be filed electronically. 7) The petition must be filed at least one day prior to the date that a first Office Action appears in the Patent Application Information Retrieval (PAIR) system. 8) The petition must be accompanied by a request for early publication in compliance with 37 CFR 1.219 and include the publication fee as set forth in 37 CFR 1.18(d).

The requirement for a fee for consideration of the petition to make special for applications pertaining to Green Technologies has been waived.

The petition lacks item 4.
In regard to item 4, applicant's statement pertaining to how the materiality standard is met does not satisfy the requirements for this pilot. The instant petition includes a statement identifying the basis for the special status as materially contributes to the more efficient utilization and conservation of natural resources. This statement is without support in the instant specification and claims. Further, the materiality standard does not permit an applicant to speculate as to how a hypothetical end-user might specially apply the invention in a manner that could materially contribute to energy conservation.

Any reconsideration of this decision should be submitted through the USPTO electronic filing system, EFS-Web, and selecting the document description of "Petition for Green Tech Pilot" on the EFS-Web screen.

Telephone inquiries concerning this decision should be directed to Lee W. Young at 571-272-4549.

The application is being forwarded to the Technology Center Art Unit 2856 for action in its regular turn.

Lee W. Young
Quality Assurance Specialist
Technology Center 2800

UNITED STATES PATENT AND TRADEMARK OFFICE

UNITED STATES DEPARTMENT OF COMMERCE
United States Patent and Trademark Office
Address: COMMISSIONER FOR PATENTS
P.O. Box 1450
Alexandria, Virginia 22313-1450
www.uspto.gov

APPLICATION NO.	FILING DATE	FIRST NAMED INVENTOR	ATTORNEY DOCKET NO.	CONFIRMATION NO.
12/391,769	02/24/2009	Hiroshi Nakamura	790001-2018.8C	7601

7590 07/10/2009
FROMMER LAWRENCE & HAUG
745 FIFTH AVENUE- 10TH FL.
NEW YORK, NY 10151

EXAMINER

ART UNIT	PAPER NUMBER
2824	

MAIL DATE	DELIVERY MODE
07/10/2009	PAPER

DECISION GRANTING PETITION UNDER 37 CFR 1.138(d)

The declaration of express abandonment is recognized

This is in response to the petition under 37 CFR 1.138(d), requesting for a refund of any previously paid search fee and excess claims fee in the above-identified application.

The petition is granted.

The express abandonment is recognized. Any previously paid search fee and excess claims fee are hereby refunded.

Telephone inquiries should be directed to the Office of Data Management at (571) 272-4200.

Nioni Farmer

Patent Publication Branch
Office of Data Management

Refund Ref:
07/13/2009 0030072101

Credit Card Refund Total: $540.00

Acct Exp...: XXXXXXXXXXX1076

Adjustment date: 07/13/2009 NFARMER
02/25/2009 INTEFSW 00001730 12391769
02 FC:1111 -540.00 OP.

FORM PET651G (Rev. 08/07)

UNITED STATES PATENT AND TRADEMARK OFFICE

UNITED STATES DEPARTMENT OF COMMERCE
United States Patent and Trademark Office
Address: COMMISSIONER FOR PATENTS
P.O. Box 1450
Alexandria, Virginia 22313-1450
www.uspto.gov

APPLICATION NO.	FILING DATE	FIRST NAMED INVENTOR	ATTORNEY DOCKET NO.	CONFIRMATION NO.
12/391,899	02/24/2009	Daisuke SUDO	SUTOSH.315AUS	7860

20995 7590 12/29/2009
KNOBBE MARTENS OLSON & BEAR LLP
2040 MAIN STREET
FOURTEENTH FLOOR
IRVINE, CA 92614

EXAMINER
YOUNG, WAYNE R

ART UNIT	PAPER NUMBER
2627	

NOTIFICATION DATE	DELIVERY MODE
12/29/2009	ELECTRONIC

Please find below and/or attached an Office communication concerning this application or proceeding.

The time period for reply, if any, is set in the attached communication.

Notice of the Office communication was sent electronically on above-indicated "Notification Date" to the following e-mail address(es):

jcartee@kmob.com
eOAPilot@kmob.com

UNITED STATES PATENT AND TRADEMARK OFFICE

Commissioner for Patents
United States Patent and Trademark Office
P.O. Box 1450
Alexandria, VA 22313-1450
www.uspto.gov

KNOBBE MARTENS OLSON & BEAR LLP
2040 MAIN STREET
FOURTEENTH FLOOR
IRVINE CA 92614

In re Application of	:	
SUDO, DAISUKE	:	DECISION ON REQUEST TO
Application No. 12/391,899	:	PARTICIPATE IN PATENT
Filed: February 24, 2009	:	PROSECUTION HIGHWAY
Attorney Docket No. **SUTOSH.315AUS**	:	PROGRAM AND PETITION
	:	TO MAKE SPECIAL UNDER
	:	37 CFR 1.102(d)

This is a decision on the request to participate in the Patent Prosecution Highway (PPH) program and the petition under 37 CFR 1.102(d), filed October 5, 2009 to make the above-identified application special.

The request and petition are **GRANTED**.

A grantable request to participate in the PPH program and petition to make special require:

(1) The U.S. application must validly claim priority under 35 U.S.C. 119(a) to one or more applications filed in the JPO;
(2) Applicant must submit a copy of the allowable/patentable claim(s) from the JPO application(s) along with an English translation thereof and a statement that the English translation is accurate;
(3) All the claims in the U.S. application must sufficiently correspond or be amended to sufficiently correspond to the allowable/patentable claim(s) in the JPO application(s);
(4) Examination of the U.S. application has not begun;
(5) Applicant must submit a copy of all the office actions from each of the JPO application(s) containing the allowable/patentable claim(s) along with an English translation thereof and a statement that the English translation is accurate;
(6) Applicant must submit an IDS listing the documents cited by the JPO examiner in the JPO office action along with copies of documents except U.S. patents or U.S. patent application publications; and
(7) The required petition fee under 37 CFR 1.17(h).

The request to participate in the PPH program and petition comply with the above requirements. Accordingly, the above-identified application has been accorded "special" status.

Telephone inquiries concerning this decision should be directed to Doris To at 571-272-7629.

All other inquiries concerning the examination or status of the application should be directed to Patent Application Information Retrieval (PAIR) system.

The application is being forwarded to the examiner for action on the merits commensurate with this decision.

/Doris To/

Doris To
Quality Assurance Specialist
Technology Center 2600
Communications

D.26

UNITED STATES PATENT AND TRADEMARK OFFICE

Commissioner for Patents
United States Patent and Trademark Office
P.O. Box 1450
Alexandria, VA 22313-1450
www.uspto.gov

DR. CHIDI UCHE
84 GREEN ROAD
KIDLINGTON, OXFORDSHIRE
OX5 2HA GB UNITED KINGDOM

MAILED

APR 26 2010

OFFICE OF PETITIONS

In re Application of	:	
Chidi UCHE	:	
Application No. 12/391,973	:	DECISION ON PETITION
Filed: February 24, 2009	:	
Attorney Docket No.	:	

This is a decision on the petition under the provisions of 37 CFR 1.182, filed September 21, 2009.

The petition is **DISMISSED** as **MOOT.**

A review of the Office records indicates that all documents and fees have been placed in the correct patent application 12/391,973 as of March 29, 2010.

Telephone inquiries concerning this decision should be directed to Michelle R. Eason at (571) 272-4231.

This application is being referred to Technology Center AU 3634 for appropriate action by the Examiner in the normal course of business.

Thurman K. Page
Petitions Examiner
Office of Petitions

UNITED STATES PATENT AND TRADEMARK OFFICE

UNITED STATES DEPARTMENT OF COMMERCE
United States Patent and Trademark Office
Address: COMMISSIONER FOR PATENTS
P.O. Box 1450
Alexandria, Virginia 22313-1450
www.uspto.gov

APPLICATION NO.	FILING DATE	FIRST NAMED INVENTOR	ATTORNEY DOCKET NO.	CONFIRMATION NO.
12/391,990	02/24/2009	Neil M. Cowen	059599-0601	8014

30542 7590 03/31/2009
FOLEY & LARDNER LLP
P.O. BOX 80278
SAN DIEGO, CA 92138-0278

EXAMINER

ART UNIT	PAPER NUMBER
1625	

MAIL DATE	DELIVERY MODE
03/31/2009	PAPER

Please find below and/or attached an Office communication concerning this application or proceeding.

The time period for reply, if any, is set in the attached communication.

UNITED STATES PATENT AND TRADEMARK OFFICE

Commissioner for Patents
United States Patent and Trademark Office
P.O. Box 1450
Alexandria, VA 22313-1450
www.uspto.gov

MAR 3 1 2009

30542
FOLEY & LARDNER LLP
P. O. Box 80278
SAN DIEGO, CA 92138-0278

In re Application of:	
COWEN et al	:
Serial No.: 12/391,990	: DECISION
Filed: February 24, 2009	: ON
Docket: 059599-0601	: Petition under
Title: Salts of Potassium ATP Channel	: 37 CFR 1.102(d)
Openers and Uses Thereof	:

This is a decision on the petition filed on February 24, 2009 to make the above-identified application special for accelerated examination procedure under 37 C.F.R. § 1.102(d).

The petition to make the application special is GRANTED.

The application is eligible for accelerated examination and the petition complies with the conditions for granting the application special status pursuant to the "Change to Practice for Petitions in Patent Applications to Make Special and for Accelerated Examination" published June 26, 2006, in the Federal Register. (71 Fed. Reg. 36323).

The prosecution of the instant application will be conducted expeditiously according to the following guidelines.

1. The application will be docketed to an examiner and taken up for action within two weeks of the date of this decision.

2. Restriction Practice:
   If the examiner determines that the claims are not directed to a single invention, a telephone request to elect one single invention will be made pursuant to MPEP 812.01. As a prerequisite to the grant of this petition, the applicant has agreed to make an oral election, by telephone, without traverse. If the applicant refuses to make an election without traverse, or the examiner cannot reach the applicant after a reasonable effort, the examiner will treat the first claimed invention (invention defined by claim 1) as having being constructively elected without traverse for examination. Office action:

If it is determined that, after appropriate consultation, there is a potential rejection or any other issue to be addressed, the examiner will telephone the applicant and arrange an interview to discuss and resolve the issue. An Office action, other than a Notice of Allowance and Fee(s) Due (Notice of Allowance), will not be issued unless either: 1) an interview was conducted but did not result in agreed to action that places the application in condition for allowance, or, 2) a determination is made that an interview would be unlikely to result in the application being placed in condition for allowance, and 3) an internal conference has been held to review any rejection of any claim.

3. Time for Reply:
An Office action other than a Notice of Allowance or a final Office action will set a shortened statutory period of one month or thirty days, whichever is longer, for reply with no extension of time available under 37 CFR 1.136(a). Failure to timely file a reply within this non-extendible period for reply will result in the abandonment of the application.

4. Reply by Applicant:
A timely reply to an Office action other than the Notice of Allowance must be submitted electronically via EFS or EFS-web and limited to addressing the rejections, objections and requirement made. Any amendment that attempts to: 1) add claims which would result in more than three pending independent claims or more than twenty pending total claims; 2) present claims not encompassed by the pre-examination search or an updated accelerated examination support document; or 3) present claims that are directed a non-elected invention or an invention other than that previously claimed and examined in the application, will be treated as not fully responsive and will not be entered.

   For any amendment to the claims (including any new claim) that is not encompassed by the accelerated examination support document, applicant must provide an updated accelerated examination support document that encompasses the amended or new claims at the time of filing of the amendment.

   To proceed expeditiously with the examination, it is recommended that a reply with amendments made to any claim or with any new claim being added be accompanied by an updated accelerated examination support document or a statement explaining how the amended or new claim is supported by the original accelerated examination support document.

5. Information Disclosure Statement (IDS):
Any IDS filed during prosecution must be submitted electronically via EFS or EFS-web, accompanied by an updated accelerated examination support document, and be in compliance with 37 CFR 1.97 and 1.98.

6. Post-Allowance Processing:
   To expedite processing of the allowed application into a patent, the applicant must: 1) pay the required fees within one month of the date of the Notice of Allowance, and 2) not file any post allowance papers not required by the Office. In no event may the issue fee be paid and accepted later than three months from the date of the Notice of Allowance.

7. After-Final and Appeal Procedures:
   To expedite prosecution, after receiving the final Office action, applicant must: 1) promptly file a notice of appeal, an appeal brief and appeal fees; and 2) not request a pre-appeal brief conference.

   Any amendment, affidavit or other evidence filed after final Office action must comply with applicable rules and the requirements outlined in numbered paragraphs 5 and 6 above.

   On appeal, the application will proceed according to normal appeal procedures. After appeal, the application will again be treated special.

8. Proceedings Outside the Normal Examination Process:
   If the application becomes involved in a proceeding that is outside the normal examination process (e.g., a secrecy order, national security review, interference proceeding, petitions under 37 CFR 1.181, 182 or 183), the application will be treated special before and after such proceeding.

9. Final Disposition:
   The twelve month goal of this accelerated examination procedure ends with a final disposition. The mailing of a final Office action, a Notice of Allowance, the filing of a Notice of Appeal, or the filing of a Request for Continued Examination (RCE) is the final disposition.

If, during prosecution, a paper is not filed electronically using EFS-web, a reply is filed but is not fully responsive, the application is involved in an appeal, or a proceeding outside normal examination process, the application will still be examined expeditiously, however, the final disposition may occur more than twelve months from the filing of the application.

Any inquiry regarding this decision should be directed to Me, Special Program Examiner, at (571) 272-0562.

Cecilia Tsang

Cecilia Tsang, SPE, Art Unit 1654
Technology Center 1600

SPE RESPONSE FOR CERTIFICATE OF CORRECTION

Paper No.: _____

DATE : 12/01/09

TO SPE OF : ART UNIT 1625

SUBJECT : Request for Certificate of Correction for Appl. No.: 12391990 Patent No.: 7572789

Please respond to this request for a certificate of correction within 7 days.

FOR IFW FILES:

Please review the requested changes/corrections as shown in the **COCIN** document(s) in the IFW application image. No new matter should be introduced, nor should the scope or meaning of the claims be changed.

Please complete the response (see below) and forward the completed response to scanning using document code **COCX**.

FOR PAPER FILES:

Please review the requested changes/corrections as shown in the attached certificate of correction. Please complete this form (see below) and forward it with the file to:

Certificates of Correction Branch (C of C)
Randolph Square 9D40-D
Palm Location 7580

You can fax the Directors/SPE response to 571-270-9990

Lamonte Newsome
Certificates of Correction Branch
703-756-1574

Thank You For Your Assistance

The request for issuing the above-identified correction(s) is hereby:
Note your decision on the appropriate box.

xApproved	**All** changes apply.
☐ **Approved in Part**	Specify below which changes **do not** apply.
☐ **Denied**	State the reasons for denial below.

Comments: _____

/Janet L. Andres/ 1625

UNITED STATES PATENT AND TRADEMARK OFFICE

UNITED STATES DEPARTMENT OF COMMERCE
United States Patent and Trademark Office
Address: COMMISSIONER FOR PATENTS
P.O. Box 1450
Alexandria, Virginia 22313-1450
www.uspto.gov

APPLICATION NO.	FILING DATE	FIRST NAMED INVENTOR	ATTORNEY DOCKET NO.	CONFIRMATION NO.
12/391,996	02/24/2009	Yoshihiro Igarashi	6639P618	8028

8791 7590 01/12/2010
BLAKELY SOKOLOFF TAYLOR & ZAFMAN LLP
1279 OAKMEAD PARKWAY
SUNNYVALE, CA 94085-4040

EXAMINER
VU, KIEU D

ART UNIT	PAPER NUMBER
2173	

MAIL DATE	DELIVERY MODE
01/12/2010	PAPER

Please find below and/or attached an Office communication concerning this application or proceeding.

The time period for reply, if any, is set in the attached communication.

UNITED STATES PATENT AND TRADEMARK OFFICE

Commissioner for Patents
United States Patent and Trademark Office
P.O. Box 1450
Alexandria, VA 22313-1450
www.uspto.gov

Blakely, Sokoloff, Taylor, & Zafman LLP
1279 Oakmead Parkway
Sunnyvale, CA 94085-4040

In re Application of: IGARASHI Y.
Application No. 12/391,996
Filed: February 24, 2009
For: Content management apparatus and content management method.

DECISION ON REQUEST TO PARTICIPATE IN PATENT PROSECUTION HIGHWAY PILOT PROGRAM AND PETITION TO MAKE SPECIAL UNDER 37 CFR 1.102(d)

This is a decision on the request to participate in the Patent Prosecution Highway (PPH) pilot program and the petition under 37 CFR 1.102(d), filed October 06, 2009 to make the above-identified application special.

The petition is **GRANTED.**

A grantable request to participate in the PPH program and petition to make special require:

(1) The U.S. application is
(a) a Paris Convention application which either
(i) validly claims priority under 35 U.S.C. 119(a) and 37 CFR 1.55 to one or more applications filed in the JPO, or
(ii) validly claims priority to a PCT application that contains no priority claims,

Or

(b) a national stage application under the PCT (an application which entered the national stage in the U.S. from a PCT international application after compliance with 35 U.S.C. 371), which PCT application
(i) validly claims priority to an application filed in the JPO, or
(ii) validly claims priority to a PCT application that contains no priority claims, or
(iii) contains no priority claim,

Or

(c) a so-called bypass application filed under 35 U.S.C. 111 (a) which validly claims benefit under 35 U.S.C. 120 to a PCT application, which PCT application
(i) validly claims priority to an application filed in the JPO, or

(ii) validly claims priority to a PCT application that contains no priority claims, or
(iii) contains no priority claim.

Where the JPO application that contains the allowable/patentable claims is not the same application for which priority is claimed in the U.S. application, applicant must identify the relationship between the JPO application that contains the allowable/patentable claims and the JPO priority application claimed in the U.S. application.

(2) Applicant must submit a copy of:
a. The allowable/patentable claim(s) from the JPO application(s) or if a copy of the allowable/patentable claims is available via the Dossier Access System (DAS) applicant may request the USPTO obtain a copy from the DAS, however if the USPTO is unable to obtain a copy from the DAS the applicant will be required to submit a copy;
b. An English translation of the allowable/patentable claim(s) and
c. A statement that the English translation is accurate;

(3) Applicant must:
a. Ensure all the claims in the U.S. application must sufficiently correspond or be amended to sufficiently correspond to the allowable/patentable claim(s) in the JPO application(s) and
b. Submit a claims correspondence table in English;

(4) Examination of the U.S. application has not begun;

(5) Applicant must submit:
a. Documentation of prior office action:
i. a copy of the office action(s)just prior to the "Decision to Grant a Patent" from each of the JPO application(s) containing the allowable/patentable claim(s) or
ii. if the allowable/patentable claims(s) are from a "Notification of Reasons for Refusal" then the Notification of Reasons for Refusal or
iii. if the JPO application is a first action allowance then no office action from the JPO is necessary should be indicated on the request/petition form;

Further, if a copy of the documents from a or b above is available via the Dossier Access System (DAS) applicant may request the USPTO obtain a copy from the DAS, however if the USPTO is unable to obtain a copy from the DAS the applicant will be required to submit a copy; b. An English language translation of the JPO Office action from (5)(a)(i)-(ii) above c. A statement that the English translation is accurate;

(6) Applicant must submit:
a. An IDS listing the documents cited by the JPO examiner in the JPO office action (unless already submitted in this application)
b. Copies of the documents except U.S. patents or U.S. patent application publications (unless already submitted in this application);

(7) The required petition fee under 37 CFR 1.17(h).

The petition is **GRANTED.**

The request to participate in the PPH pilot program and petition are found to comply with the above requirements. Accordingly, the above-identified application has been accorded "special" status.

Telephone inquiries concerning this decision should be directed to Mano Padmanabhan at 571-272-4210.

All other inquiries concerning the examination or status of the application is accessible in the PAIR system at http://www.uspto.gov/ebc/index.html.

The application is being forwarded to the examiner for action on the merits commensurate with this decision.

/Mano Padmanabhan/

Mano Padmanabhan
Quality Assurance Specialist, Technology Center 2100, Workgroup 2180
571-272-4210

UNITED STATES PATENT AND TRADEMARK OFFICE

Commissioner for Patents
United States Patent and Trademark Office
P.O. Box 1450
Alexandria, VA 22313-1450
www.uspto.gov

SILICON IMAGE/BSTZ
BLAKELY SOKOLOFF TAYLOR & ZAFMAN LLP
1279 OAKMEAD PARKWAY
SUNNYVALE, CA 94085-4040

MAILED

SEP 28 2009

OFFICE OF PETITIONS

In re Application of	:	
Choi et al.	:	
Application No. 12/392,000	:	Decision According Status
Filed: February 24, 2009	:	Under 37 CFR 1.47(a)
Attorney Docket No. 8029P043	:	
For: Method, Apparatus, and System for	:	
Pre-Authentication and Processing	:	
of Data Streams	:	

This is a decision on the petition under 37 CFR 1.47(a) filed May 11, 2009.

The petition is **granted**.

The above-identified application and papers have been reviewed and found in compliance with 37 CFR 1.47(a). This application is hereby accorded Rule 1.47(a) status.

As provided in Rule 1.47(c), this Office will forward notice of this application's filing to the non-signing inventor at the address given in the petition. Notice of the filing of this application will also be published in the Official Gazette.

Technology Center Art Unit 2432 will be informed of the instant decision to ensure the examiner assigned the case is aware the declaration has been accepted without inventor Lyle's signature and is in condition to be examined in due course.

Telephone inquiries regarding this communication should be directed to Petitions Attorney Steven Brantley at (571) 272-3203.

Charles Steven Brantley
Senior Petitions Attorney
Office of Petitions