UNITED STATES PATENT AND TRADEMARK OFFICE

UNITED STATES DEPARTMENT OF COMMERCE
United States Patent and Trademark Office
Address: COMMISSIONER FOR PATENTS
P.O. Box 1450
Alexandria, Virginia 22313-1450
www.uspto.gov

APPLICATION NO.	FILING DATE	FIRST NAMED INVENTOR	ATTORNEY DOCKET NO.	CONFIRMATION NO.
12/748,744		Kazuhiro Shimoda	12143-0022	5863

22902 7590 04/02/2010
CLARK & BRODY
1700 Diagonal Road, Suite 510
Alexandria, VA 22314

EXAMINER

ART UNIT	PAPER NUMBER
3725	

MAIL DATE	DELIVERY MODE
04/02/2010	PAPER

Please find below and/or attached an Office communication concerning this application or proceeding.

The time period for reply, if any, is set in the attached communication.

UNITED STATES PATENT AND TRADEMARK OFFICE

Commissioner for Patents
United States Patent and Trademark Office
P.O. Box 1450
Alexandria, VA 22313-1450
www.uspto.gov

CLARK & BRODY
1700 Diagonal Road, Suite 510
Alexandria VA 22314

In re Application of	:	
SHIMODA, KAZUHIRO	:	DECISION ON REQUEST TO
Application No. 12/748,744	:	PARTICIPATE IN PATENT
Filed: March 29, 2010	:	PCT/PROSECUTION HIGHWAY
Attorney Docket No. 12143-0022	:	PROGRAM AND PETITION
For: METHOD OF PRODUCING SEAMLESS METAL TUBE AND PUNCH FOR USE THEREIN	:	37 CFR 1.102(d)

This is a decision on the request to participate in the Patent Prosecution Highway (PPH) program and the petition under 37 CFR 1.102(d), filed March 29, 2010, to make the above-identified application special.

The request and petition are dismissed.

A grantable request to participate in the PPH program and petition to make special require:
(1) The U.S. application must disclose an eligible relationship to one or more PCT applications filed in the JPO, EPO or USPTO;
(2) Applicant must submit a copy of the allowable/patentable claim(s) from the PCT application(s) latest international work product (the written opinion or the IPER) along with an English translation thereof and a statement that the English translation is accurate;
(3) All the claims in the U.S. application must sufficiently correspond or be amended to sufficiently correspond to the allowable/patentable claim(s) in the PCT application(s);
(4) Examination of the U.S. application has not begun;
(5) Applicant must submit a copy of the latest international work product from the PCT application containing the allowable/patentable claim(s) along with an English translation thereof and a statement that the English translation is accurate;
(6) Applicant must submit an IDS listing the documents cited by the PCT examiner in the international work product along with copies of documents except U.S. patents or U.S. patent application publications; and
(7) The required petition fee under 37 CFR 1.17(h).

The request to participate in the PPH program and petition met all conditions except Items #2, #5 and #6 above. The request to participate in the PPH pilot program and petition fail to include a copy of the allowable/patentable claim(s) from the PCT application(s) latest international work product (the written opinion or the IPER); a copy of the latest international work product from the PCT application containing the allowable/patentable claim(s) along with an English translation thereof and a statement that the English translation is accurate; and an IDS listing the documents cited by the PCT examiner in the international work product along with copies of documents except U.S. patents or U.S. patent application publications.

Applicant is encouraged to cite and submit all relevant prior art references, if any, to facilitate examination in this application.

Currently, this application is undergoing pre-exam processing. All other inquiries concerning the examination or status of the application should be directed to the Patent Application Information Retrieval (PAIR) system.

Applicant is given a time period of **ONE MONTH or THIRTY DAYS**, whichever is longer, from the mailing date of this decision to correct the deficiencies. **NO EXTENSION OF TIME UNDER 37 CFR 1.136 IS PERMITTED.** If the deficiencies are not corrected with the time period given, the application will await action in its regular turn.

Response must be filed via EFS-Web. Telephone inquiries concerning this decision should be directed to Henry C. Yuen, at 571-272-4856.

The petition is **dismissed.**

/Henry C. Yuen/

Henry C. Yuen, Special Programs Examiner
Technology Center 3700 – Mechanical Engineering,
Manufacturing and Products
571-272-4856

UNITED STATES PATENT AND TRADEMARK OFFICE

UNITED STATES DEPARTMENT OF COMMERCE
United States Patent and Trademark Office
Address: COMMISSIONER FOR PATENTS
P.O. Box 1450
Alexandria, Virginia 22313-1450
www.uspto.gov

APPLICATION NO.	FILING DATE	FIRST NAMED INVENTOR	ATTORNEY DOCKET NO.	CONFIRMATION NO.
12/748,744	03/29/2010	Kazuhiro Shimoda	12143-0022	5863

22902 7590 04/30/2010
CLARK & BRODY
1700 Diagonal Road, Suite 510
Alexandria, VA 22314

EXAMINER

ART UNIT	PAPER NUMBER
3725	

MAIL DATE	DELIVERY MODE
04/30/2010	PAPER

Please find below and/or attached an Office communication concerning this application or proceeding.

The time period for reply, if any, is set in the attached communication.

UNITED STATES PATENT AND TRADEMARK OFFICE

Commissioner for Patents
United States Patent and Trademark Office
P.O. Box 1450
Alexandria, VA 22313-1450
www.uspto.gov

CLARK & BRODY
1700 Diagonal Road, Suite 510
Alexandria VA 22314

In re Application of: SHIMODA, KAZUHIRO et al Serial No.: 12/748,744 Filed: March 29, 2010 Docket: 12143-0022 Title: METHOD OF PRODUCING SEAMLESS METAL TUBE AND PUNCH FOR USE THEREIN	DECISION ON REQUEST TO PARTICIPATE IN PATENT PROSECUTION HIGHWAY (PPH) AND PETITION TO MAKE SPECIAL UNDER 37 CFR 1.102(d)

This is a decision on the renewed request to participate in the Patent Prosecution Highway (PPH) program and the petition under 37 CFR 1.102(d), filed April 29, 2010, to make the above-identified application special.

The request and petition are **GRANTED**.

A grantable request to participate in the PPH program and petition to make special require:

(1) The U.S. application must validly claim priority under 35 U.S.C. 119(a) to one or more corresponding application(s) filed in the JPO or to a PCT application that does not contain any priority claim, or the U.S. application must be a national stage entry of a PCT application that does not contain any priority claim;
(2) Applicant must submit a copy of the allowable/patentable claim(s) from the JPO application(s) along with an English translation thereof and a statement that the English translation is accurate;
(3) All the claims in the U.S. application must sufficiently correspond or be amended to sufficiently correspond to the allowable/patentable claim(s) in the JPO application(s);
(4) Examination of the U.S. application has not begun;
(5) Applicant must submit a copy of all the office actions from each of the JPO application(s) containing the allowable/patentable claim(s) along with an English translation thereof and a statement that the English translation is accurate;
(6) Applicant must submit an IDS listing the documents cited by the JPO examiner in the JPO office action along with copies of documents except U.S. patents or U.S. patent application publications; and
(7) The required petition fee under 37 CFR 1.17(h).

In light of the petition being properly submitted, the request to participate in the PPH program and the petition comply with the above requirements. Accordingly, the above-identified application has been accorded "special" status.

The applicant is encouraged to cite and submit all relevant prior art references, if any, to facilitate examination in this application.

Telephone inquiries concerning this decision should be directed to Henry C. Yuen at 571-272-4856. All other inquiries concerning the examination or status of the application should be directed to Dana Ross, the SPE of Art Unit 3725, and 571-272-4480 for Class 72 and also accessible in the PAIR system at http://www.uspto.gov/ebc.index.html.

Petition is **granted**.

/Henry C. Yuen/

Henry C. Yuen, Special Programs Examiner
Technology Center 3700 – Mechanical Engineering,
Manufacturing and Products
571-272-4856

UNITED STATES PATENT AND TRADEMARK OFFICE

Commissioner for Patents
United States Patent and Trademark Office
P.O. Box 1450
Alexandria, VA 22313-1450
www.uspto.gov

In re Application of
Anthony A. Anthony

Application No. 12749040

Filed:

Attorney Docket No. 10016-0012

:DECISION ON PETITION TO MAKE SPECIAL
:UNDER 37 CFR 1.102(c)(1)

This is a decision on the electronic petition under 37 CFR 1.102 (c)(1), filed 31-MAR-2010 to make the above-identified application special based on applicant's age as set forth in MPEP § 708.02, Section IV.

The petition is **GRANTED**.

A grantable petition to make an application special under 37 CFR 1.102(c)(1), MPEP § 708.02, Section IV: Applicant's Age must include a statement by applicant or a registered practitioner having evidence that applicant is at least 65 years of age. No fee is required.

Accordingly, the above-identified application has been accorded "special" status and will be taken up for action by the examiner upon the completion of all pre-examination processing.

Telephone inquiries concerning this electronic decision should be directed to the Electronic Business Center at 866-217-9197.

All other inquiries concerning either the examination or status of the application should be directed to the Technology Center.

UNITED STATES PATENT AND TRADEMARK OFFICE

Commissioner for Patents
United States Patent and Trademark Office
P.O. Box 1450
Alexandria, VA 22313-1450
www.uspto.gov

Silicon Valley Patent Group, LLP
18805 Cox Avenue
Suite 220
Saratoga, CA 95070

MAILED

JUN 08 2010
OFFICE OF PETITIONS

In re Application of
David L. Klein et al.
Application No. 12/749,374
Filed: March 29, 2010
Attorney Docket No. GR8003-3C US

DECISION ON PETITION
TO WITHDRAW
FROM RECORD

This is a decision on the Request to Withdraw as attorney or agent of record under 37 C.F.R. § 1.36(b), filed May 3, 2010.

The request is **moot because a revocation of power of attorney has been filed**.

A review of the file record indicates that the power of attorney to Michael J. Halbert and all attorneys/agents of record has been revoked by the assignee of the patent application on May 19, 2010. Accordingly, the request to withdraw under 37 C.F.R. § 1.36(b) is moot.

All future communications from the Office will continue to be directed to the below-listed address until otherwise notified by applicant.

Telephone inquires concerning this decision should be directed to Kimberly Inabinet at 571-272-4618.

/Kimberly Inabinet/

Kimberly Inabinet
Petitions Examiner
Office of Petitions

cc: Leydig Voit & Mayer, Ltd.
700 Thirteenth Street, NW
Suite 300
Washington, DC 20005-3960

UNITED STATES PATENT AND TRADEMARK OFFICE

UNITED STATES DEPARTMENT OF COMMERCE
United States Patent and Trademark Office
Address: COMMISSIONER FOR PATENTS
P.O. Box 1450
Alexandria, Virginia 22313-1450
www.uspto.gov

APPLICATION NUMBER	FILING OR 371(C) DATE	FIRST NAMED APPLICANT	ATTY. DOCKET NO./TITLE
12/749,374	03/29/2010	David L. Klein	GR8003-3C US

CONFIRMATION NO. 6932

POWER OF ATTORNEY NOTICE

34036
Silicon Valley Patent Group LLP
18805 Cox Avenue
Suite 220
Saratoga, CA 95070

OC000000041965816

Date Mailed: 06/07/2010

NOTICE REGARDING CHANGE OF POWER OF ATTORNEY

This is in response to the Power of Attorney filed 05/19/2010.

- The Power of Attorney to you in this application has been revoked by the assignee who has intervened as provided by 37 CFR 3.71. Future correspondence will be mailed to the new address of record(37 CFR 1.33).

/kainabinet/

Office of Data Management, Application Assistance Unit (571) 272-4000, or (571) 272-4200, or 1-888-786-0101

UNITED STATES PATENT AND TRADEMARK OFFICE

UNITED STATES DEPARTMENT OF COMMERCE
United States Patent and Trademark Office
Address: COMMISSIONER FOR PATENTS
P.O. Box 1450
Alexandria, Virginia 22313-1450
www.uspto.gov

APPLICATION NO.	FILING DATE	FIRST NAMED INVENTOR	ATTORNEY DOCKET NO.	CONFIRMATION NO.
12/750,558	03/30/2010	Bertrand Le Bourdonnec	322982-004C1 (398427)	9023

37509 7590 04/07/2010
DECHERT LLP
P.O. BOX 390460
MOUNTAIN VIEW, CA 94039-0460

EXAMINER

ART UNIT	PAPER NUMBER
1628	

NOTIFICATION DATE	DELIVERY MODE
04/07/2010	ELECTRONIC

Please find below and/or attached an Office communication concerning this application or proceeding.

The time period for reply, if any, is set in the attached communication.

Notice of the Office communication was sent electronically on above-indicated "Notification Date" to the following e-mail address(es):

napatentdept@dechert.com

UNITED STATES PATENT AND TRADEMARK OFFICE

Commissioner for Patents
United States Patent and Trademark Office
P.O. Box 1450
Alexandria, VA 22313-1450
www.uspto.gov

APR 0 7 2010

DECHERT LLP
P.O. BOX 390460
MOUNTAIN VIEW CA 94039-0460

In re Application of: LE BOURDONNEC et al. Serial No.: 12/750,558 Filed: March 30, 2010 Docket: 322982-004C1 (398427) Title: **BELOXEPIN AND ANALOGS FOR THE TREATMENT OF PAIN**	: : : : : : :	DECISION ON PETITION TO MAKE SPECIAL FOR NEW APPLICATION UNDER 37 C.F.R. § 1.102 & M.P.E.P. § 708.02

This is a decision on the petition filed on March 30, 2010 to make the above-identified application special for accelerated examination procedure under 37 C.F.R. § 1.102(d).

The petition to make the application special is **GRANTED**.

The application is eligible for accelerated examination and the petition complies with the conditions for granting the application special status pursuant to the "Change to Practice for Petitions in Patent Applications to Make Special and for Accelerated Examination" published June 26, 2006, in the Federal Register. (71 Fed. Reg. 36323).

The prosecution of the instant application will be conducted expeditiously according to the following guidelines.

1. The application will be docketed to an examiner and taken up for action within two weeks of the date of this decision.

2. Restriction Practice:
   If the examiner determines that the claims are not directed to a single invention, a telephone request to elect one single invention will be made pursuant to MPEP 812.01. As a prerequisite to the grant of this petition, the applicant has agreed to make an oral election, by telephone, without traverse. If the applicant refuses to make an election without traverse, or the examiner cannot reach the applicant after a reasonable effort, the examiner will treat the first claimed invention (invention defined by claim 1) as having being constructively elected without traverse for examination.

3. Office action:
   If it is determined that, after appropriate consultation, there is a potential rejection or any other issue to be addressed, the examiner will telephone the applicant and arrange an

interview to discuss and resolve the issue. An Office action, other than a Notice of Allowance and Fee(s) Due (Notice of Allowance), will not be issued unless either: 1) an interview was conducted but did not result in agreed to action that places the application in condition for allowance, or, 2) a determination is made that an interview would be unlikely to result in the application being placed in condition for allowance, and 3) an internal conference has been held to review any rejection of any claim.

4. Time for Reply:
An Office action other than a Notice of Allowance or a final Office action will set a shortened statutory period of one month or thirty days, whichever is longer, for reply with no extension of time available under 37 CFR 1.136(a). Failure to timely file a reply within this non-extendible period for reply will result in the abandonment of the application.

5. Reply by Applicant:
A timely reply to an Office action other than the Notice of Allowance must be submitted electronically via EFS or EFS-web and limited to addressing the rejections, objections and requirement made. Any amendment that attempts to: 1) add claims which would result in more than three pending independent claims or more than twenty pending total claims; 2) present claims not encompassed by the pre-examination search or an updated accelerated examination support document; or 3) present claims that are directed a non-elected invention or an invention other than that previously claimed and examined in the application, will be treated as not fully responsive and will not be entered.

   For any amendment to the claims (including any new claim) that is not encompassed by the accelerated examination support document, applicant must provide an updated accelerated examination support document that encompasses the amended or new claims at the time of filing of the amendment.

   To proceed expeditiously with the examination, it is recommended that a reply with amendments made to any claim or with any new claim being added be accompanied by an updated accelerated examination support document or a statement explaining how the amended or new claim is supported by the original accelerated examination support document.

6. Information Disclosure Statement (IDS):
Any IDS filed during prosecution must be submitted electronically via EFS or EFS-web, accompanied by an updated accelerated examination support document, and be in compliance with 37 CFR 1.97 and 1.98.

7. Post-Allowance Processing:
   To expedite processing of the allowed application into a patent, the applicant must: 1) pay the required fees within one month of the date of the Notice of Allowance, and 2) not file any post allowance papers not required by the Office. In no event may the issue fee be paid and accepted later than three months from the date of the Notice of Allowance.

8. After-Final and Appeal Procedures:
   To expedite prosecution, after receiving the final Office action, applicant must: 1) promptly file a notice of appeal, an appeal brief and appeal fees; and 2) not request a pre-appeal brief conference.

   Any amendment, affidavit or other evidence filed after final Office action must comply with applicable rules and the requirements outlined in numbered paragraphs 5 and 6 above.

   On appeal, the application will proceed according to normal appeal procedures. After appeal, the application will again be treated special.

9. Proceedings Outside the Normal Examination Process:
   If the application becomes involved in a proceeding that is outside the normal examination process (e.g., a secrecy order, national security review, interference proceeding, petitions under 37 CFR 1.181, 182 or 183), the application will be treated special before and after such proceeding.

10. Final Disposition:
    The twelve month goal of this accelerated examination procedure ends with a final disposition. The mailing of a final Office action, a Notice of Allowance, the filing of a Notice of Appeal, or the filing of a Request for Continued Examination (RCE) is the final disposition.

If, during prosecution, a paper is not filed electronically using EFS-web, a reply is filed but is not fully responsive, the application is involved in an appeal, or a proceeding outside normal examination process, the application will still be examined expeditiously, however, the final disposition may occur more than twelve months from the filing of the application.

Any inquiry regarding this decision should be directed to Michael P. Woodward, Quality Assurance Specialist, at (571) 272-8373.

/MP Woodward/
Michael P. Woodward, Quality Assurance Specialist
Technology Center 1600

UNITED STATES PATENT AND TRADEMARK OFFICE

COMMISSIONER FOR PATENTS
UNITED STATES PATENT AND TRADEMARK OFFICE
P.O. BOX 1450
ALEXANDRIA, VA 22313-1450
WWW.USPTO.GOV

Paper No.

PHILIP S. JOHNSON
JOHNSON & JOHNSON
ONE JOHNSON & JOHNSON PLAZA
NEW BRUNSWICK NJ 08933-7003

MAILED

JUN 15 2010

OFFICE OF PETITIONS

In re Application of Michael G. Tokarski, James Peck, Edward Dzwill, George Brock, Roger W. Smith, Michael D. Schulte, and Michael Scott Ulrich Application No. 12/752,357 Filed: April 1, 2010 Attorney Docket Number: VTN5109US Title: CONTACT LENS PACKAGES	DECISION ACCORDING STATUS UNDER 37 C.F.R. § 1.47(A)

This is in response to the request for the Office to accord Rule 1.47 status to the above-identified application, filed April 1, 2010, on initial deposit of this application.

On April 1, 2010, the application was filed, identifying Michael G. Tokarski, James Peck, Edward Dzwill, George Brock, Roger W. Smith, Michael D. Schulte, and Michael Scott Ulrich as joint inventors. This petition was deposited on filing.

The $200 fee that is associated with the filing of this petition will be charged to Deposit Account No. 10-0750 in due course, as authorized on the Electronic Acknowledgement Receipt.

This application is a division of 11/255,144. Petitioner has indicated that Rule 1.47 status was accorded to prior-filed application No. 11/255,144 via the mailing of a decision on April 14, 2006.

37 C.F.R. § 1.63(d)(3) sets forth, *in toto*:

> Where the executed oath or declaration of which a copy is submitted for a continuation or divisional application was originally filed in a prior application accorded status under § 1.47, the copy of the executed oath or declaration for such prior application must be accompanied by:
> (i) A copy of the decision granting a petition to accord § 1.47 status to the prior application, unless all inventors or legal representatives have filed an oath or declaration to join in an application accorded status under § 1.47 of which the continuation or divisional application claims a benefit under 35 U.S.C. 120, 121, or 365(c); and
> (ii) If one or more inventor(s) or legal representative(s) who refused to join in the prior application or could not be found or reached has subsequently joined in the prior application or another application of which the continuation or divisional application claims a benefit under 35 U.S.C. 120, 121, or 365(c), a copy of the subsequently executed oath(s) or declaration(s) filed by the inventor or legal representative to join in the application.

See also MPEP § 201.06(c)(VI).

With this request for the Office to accord Rule 1.47 status to the above-identified application, Petitioner has further included a copy of the decision granting a petition to accord Rule 1.47 status to the prior application.

Therefore, the petition is **GRANTED** and this application is hereby accorded Rule 1.47(a) status.

As provided in Rule 1.47(c), this Office will not forward notice of this application's filing to the non-signing inventor at the address given on the declaration, and notice of the filing of this application will not be published in the Official Gazette.

The Technology Center will be notified of this decision. The Technology Center's support staff will notify the Examiner of this decision, so that the present application can receive further processing in due course.

Telephone inquiries regarding *this decision* should be directed to the undersigned at (571) 272-3225.[1] All other inquiries

---

1 Petitioner will note that all practice before the Office should be in writing, and the action of the Office will be based exclusively on the written record in the Office. See 37 C.F.R. § 1.2. As such, Petitioner is reminded that no telephone discussion may be controlling or considered authority for Petitioner's further action(s).

concerning examination procedures or status of the application should be directed to the Technology Center.

/Paul Shanoski/
Paul Shanoski
Senior Attorney
Office of Petitions

UNITED STATES PATENT AND TRADEMARK OFFICE

UNITED STATES DEPARTMENT OF COMMERCE
United States Patent and Trademark Office
Address: COMMISSIONER FOR PATENTS
P.O. Box 1450
Alexandria, Virginia 22313-1450
www.uspto.gov

APPLICATION NO.	FILING DATE	FIRST NAMED INVENTOR	ATTORNEY DOCKET NO.	CONFIRMATION NO.
12/752,502		John A Saavedra	4031/1US	2597

23638 7590 04/19/2010
ADAMS INTELLECTUAL PROPERTY LAW
Suite 2350 Charlotte Plaza
201 South College Street
CHARLOTTE, NC 28244

EXAMINER	
ART UNIT	PAPER NUMBER
3745	

NOTIFICATION DATE	DELIVERY MODE
04/19/2010	ELECTRONIC

Please find below and/or attached an Office communication concerning this application or proceeding.

The time period for reply, if any, is set in the attached communication.

Notice of the Office communication was sent electronically on above-indicated "Notification Date" to the following e-mail address(es):

patbox@adamspat.com
als@adamspat.com

UNITED STATES PATENT AND TRADEMARK OFFICE

Commissioner for Patents
United States Patent and Trademark Office
P.O. Box 1450
Alexandria, VA 22313-1450
www.uspto.gov

ADAMS INTELLECTUAL PROPERTY LAW
Suite 2350 Charlotte Plaza
201 South College Street
CHARLOTTE NC 28244

APR 19 2010

In re Application of	:	
John A Saavedra	:	DECISION ON PETITION
Application No. 12/752502	:	TO MAKE SPECIAL UNDER
Filed: April 01, 2010	:	THE GREEN TECHNOLOGY
Attorney Docket No. 4031/1US	:	PILOT PROGRAM

This is a decision on the petition under 37 CFR 1.102, filed April 01, 2010, to make the above-identified application special under the pilot program for applications pertaining to Green Technologies as set forth 74 Federal Register Notice 64666 (December 8, 2009).

The petition is **DENIED**.

A grantable petition to make an application special under 37 CFR 1.102 and the pilot program as set forth in 74 FR 64666 must be directed to a nonprovisional application filed under 35 USC 111(a) or be a national stage entry under 35 USC 371, exclusive of any reissue applications and be filed prior to the date of the notice, December 8, 2009.

The present application is a nonprovisional application filed under 35 USC 111(a) filed after December 8, 2009. Accordingly, this application is not eligible in the Green Technology Pilot Program.

Telephone inquires concerning this decision should be directed to Blaine Copenheaver at 571-272-1156.

/Blaine Copenheaver/

Blaine Copenheaver
Quality Assurance Specialist
Technology Center 1700

UNITED STATES PATENT AND TRADEMARK OFFICE

Commissioner for Patents
United States Patent and Trademark Office
P.O. Box 1450
Alexandria, VA 22313-1450
www.uspto.gov

In re Application of
Chien-Hsing Chang

Application No. 12752649

Filed: April 1,2010

Attorney Docket No. IBC124US1

:DECISION ON PETITION TO MAKE SPECIAL
:UNDER 37 CFR 1.102(c)(1)

This is a decision on the electronic petition under 37 CFR 1.102 (c)(1), filed 07-JUN-2010 to make the above-identified application special based on applicant's age as set forth in MPEP § 708.02, Section IV.

The petition is **GRANTED**.

A grantable petition to make an application special under 37 CFR 1.102(c)(1), MPEP § 708.02, Section IV: Applicant's Age must include a statement by applicant or a registered practitioner having evidence that applicant is at least 65 years of age. No fee is required.

Accordingly, the above-identified application has been accorded "special" status and will be taken up for action by the examiner upon the completion of all pre-examination processing.

Telephone inquiries concerning this electronic decision should be directed to the Electronic Business Center at 866-217-9197.

All other inquiries concerning either the examination or status of the application should be directed to the Technology Center.

UNITED STATES PATENT AND TRADEMARK OFFICE

UNITED STATES DEPARTMENT OF COMMERCE
United States Patent and Trademark Office
Address: COMMISSIONER FOR PATENTS
P.O. Box 1450
Alexandria, Virginia 22313-1450
www.uspto.gov

APPLICATION NO.	FILING DATE	FIRST NAMED INVENTOR	ATTORNEY DOCKET NO.	CONFIRMATION NO.
12/753,608	04/02/2010	Arnold Sepke	64553.001291	4994

21967 7590 05/04/2010
HUNTON & WILLIAMS LLP
INTELLECTUAL PROPERTY DEPARTMENT
1900 K STREET, N.W.
SUITE 1200
WASHINGTON, DC 20006-1109

EXAMINER
HOPKINS, ROBERT A

ART UNIT	PAPER NUMBER
1797	

MAIL DATE	DELIVERY MODE
05/04/2010	PAPER

Please find below and/or attached an Office communication concerning this application or proceeding.

The time period for reply, if any, is set in the attached communication.

UNITED STATES PATENT AND TRADEMARK OFFICE

Commissioner for Patents
United States Patent and Trademark Office
P.O. Box 1450
Alexandria, VA 22313-1450
www.uspto.gov

MAY 05 2010

CST

In re application of
Arnold Sepke et al
Serial No. 12/753,608
Filed: April 2, 2010
For: VACUUM CLEANER FILTER ASSEMBLY

DECISION ON PETITION
TO MAKE SPECIAL

This is a decision on the petition filed on April 2, 2010 to make the above-identified application special under the accelerated examination program.

The petition to make the application special is **DISMISSED.**

REGULATION AND PRACTICE

A grantable petition to make special under 37 C.F.R. § 1.102(d) and pursuant to the "Change to Practice for Petitions in Patent Applications to Make Special and for Accelerated Examination" published in the Federal Register on June 26, 2006 (71 Fed. Reg. 36323), must satisfy the following conditions:

I. Conditions Regarding the Application:

1. the application must be a non-reissue utility or design application filed under 37 CFR 1.111(a);
2. the application, the petition and the required fees must be filed electronically using the USPTO's electronic filing system (EFS), or EFS-web; if not filed electronically, a statement asserting that EFS and EFS-web were not available during the normal business hours;
3. at the time of filing, the application must be complete under 37 CFR 1.51 and in condition for examination;
4. the application must contain three or fewer independent claims and twenty or fewer total claims and the claims must be directed to a single invention.

II. Conditions Regarding the Petition:

The petition must:

1. be filed with the application;
2. include a statement that applicant agrees not to separately argue the patentability of any dependent claim during any appeal in the application;

3. include a statement that applicant agrees to make an election without traverse in a telephone interview;

4. include a statement that applicant agrees to conduct such an interview when requested by the examiner;

5. include a statement, made based on a good faith belief, that a preexamination search in compliance with the following requirements, was conducted, including an identification of the field of search by United States class and subclass, where applicable, and for database searches, the search logic or chemical structure or sequence used as a query, the name of the file(s) searched and the database service, and the date of the search.

The preexamination search must:

5.1 involve U.S. patents and patent application publications, foreign patent documents, and non-patent literature, unless the applicant can justify with reasonable certainty that no references more pertinent than those already identified are likely to be found in the eliminated sources and includes such a justification with this statement;

5.2. be directed to the claimed invention and encompass all of the features of the claims, giving the claims the broadest reasonable interpretation;

5.3. encompass the disclosed features that may be claimed.

6. must provide in support of the petition an accelerated examination support document.

An accelerated examination support document must include:

6.1. an information disclosure statement (IDS) in compliance with 37 CFR 1.98 citing each reference deemed most closely related to the subject matter of each of the claims;

6.2. an identification of all the limitations in the claims that are disclosed by the reference specifying where the limitation is disclosed in the cited reference;

6.3. a detailed explanation of how each of the claims are patentable over the references cited with particularity required by 37 CFR 1.111(b) and (c);

6.4. a concise statement of the utility of the invention as defined in each of the independent claims (unless the application is a design application);

6.5. a showing of where each limitation of the claims finds support under 35 USC 112, first paragraph, in the written description of the specification. If applicable, the showing must also identify: (1) each means- (or step) plus-function claim element that invokes consideration under 35 USC 112, sixth paragraph; and (2) the structure, material, or acts in the specification that corresponds to each means- (or step) plus-function claim element that invokes consideration under 35 USC 112, sixth paragraph; if the application claims the benefit of one or more applications under title 35, United States Code, the showing must also include where each limitation of the claims finds support under 35 USC 112, first paragraph, in each such application in which such supports exists;

6.6. an identification of any cited references that may be disqualified under 35 USC 103(c).

REVIEW OF FACTS

The conditions regarding the application (section I, subsections 1-4) discussed above are considered to have been met. Additionally, the conditions regarding the petition, section II, subsections 1-4, are considered to have been met. However, the petition fails to comply with condition II, subsections 5 and 6.

The statement showing support for the present claims on pages 55 - 59 of the Accelerated Examination Support Document (AESD) is not sufficient. While petitioner has provided a showing of where each limitation finds support in the present application and provisional applications 60/689,255 and 60/706,063, it is also required that petitioner provide a showing of where each limitation of the claims finds support under 35 USC 112, first paragraph, in the written description of parent application 12/615,742 and 11/417,167 as applicant has claimed priority to these applications.

It is noted that on page 55 of the AESD, petitioner states that the paragraph numbering of the '167 application as filed, is the same as the present application; therefore the provided citations are applicable to that application also. However, in a quick review of the 11/417,167 application (and of the 12/615,742 application, which is not mentioned on page 55 of the AESD), it is noted that none of the paragraphs of these applications are numbered, and that the specifications are both 45 pages (whereas the current specification is 38 pages). Thus, it is suggested that the showing of where each limitation of the claims finds support in the written description of the parent applications be based on indicator which can readily be found, such as a page number.

Furthermore, it is noted that a search in Class 96, subclass 222 is also required. A review of page 1 of the pre-examination search statement shows that subclass 223 was searched, however from page 3 of the document (item S48), it appears that Class 96, subclass 222 was also searched. Clarification of whether Class 96, subclass 222 was searched is required.

Therefore, the petition fails to meet the required conditions to be accorded special status under the accelerated examination procedure.

DECISION

For the above-stated reasons, the petition is dismissed. The application will therefore be taken up by the examiner in its regular turn.

Petitioner is given a single opportunity to perfect the petition. Any request for reconsideration of this decision must be submitted within 1 (one) month or 30 (thirty) days, whichever is longer, (no extension of time under 37 CFR 1.136(a)) from the date of this decision in order to be considered timely. Any request for reconsideration must address the deficiencies indicated above.

Petitioner is reminded that, upon granting of the special status of the application on request for reconsideration, the application will be processed expeditiously. However, due to the dismissal of the instant petition, examination may not be completed within twelve months of the filing date of the application.

Any inquiry regarding this decision should be directed to Christine Tierney, Quality Assurance Specialist, at (571) 272-1055.

/Christine Tierney/

Christine Tierney
Quality Assurance Specialist
Technology Center 1700

UNITED STATES PATENT AND TRADEMARK OFFICE

UNITED STATES DEPARTMENT OF COMMERCE
United States Patent and Trademark Office
Address: COMMISSIONER FOR PATENTS
P.O. Box 1450
Alexandria, Virginia 22313-1450
www.uspto.gov

APPLICATION NO.	FILING DATE	FIRST NAMED INVENTOR	ATTORNEY DOCKET NO.	CONFIRMATION NO.
12/753,608	04/02/2010	Arnold Sepke	64553.001291	4994

21967 7590 07/09/2010
HUNTON & WILLIAMS LLP
INTELLECTUAL PROPERTY DEPARTMENT
1900 K STREET, N.W.
SUITE 1200
WASHINGTON, DC 20006-1109

EXAMINER
HOPKINS, ROBERT A

ART UNIT	PAPER NUMBER
1797	

MAIL DATE	DELIVERY MODE
07/09/2010	PAPER

Please find below and/or attached an Office communication concerning this application or proceeding.

The time period for reply, if any, is set in the attached communication.

UNITED STATES PATENT AND TRADEMARK OFFICE

Commissioner for Patents
United States Patent and Trademark Office
P.O. Box 1450
Alexandria, VA 22313-1450
www.uspto.gov

CST

JUL 0 9 2010

In re application of
Arnold Sepke et al
Serial No. 12/753,608
Filed: April 2, 2010
For: VACUUM CLEANER FILTER ASSEMBLY

DECISION ON PETITION
TO MAKE SPECIAL

This is a decision on the Request for Reconsideration of Petition to Make Special under the Accelerated Examination Program filed on June 3, 2010 to make the above-identified application special.

The petition to make the application special is **GRANTED.**

It is noted that the Petition to Make Special under the Accelerated Examination Program filed April 2, 2010 was dismissed on May 4, 2010 because of deficiencies in the Accelerated Examination Support Document and deficiencies in the search. Applicant was given one month to perfect the petition. Request for reconsideration was filed on June 3, 2010. However, a non-final office action was mailed in this application on June 16, 2010, before the request for reconsideration was considered.

Accordingly, the office action of June 16, 2010 is vacated as being premature. Specifically, the request for reconsideration had not been considered when the non-final office action was mailed.

The application is eligible for accelerated examination and the petition complies with the conditions for granting the application special status pursuant to the "Change to Practice for Petitions in Patent Applications to Make Special and for Accelerated Examination" published June 26, 2006, in the Federal Register. (71 Fed. Reg. 36323).

The prosecution of the instant application will be conducted expeditiously according to the following guidelines.

1. The application will be docketed to an examiner and taken up for action within two weeks of the date of this decision.

2. Restriction Practice:
   If the examiner determines that the claims are not directed to a single invention, a telephone request to elect one single invention will be made pursuant to MPEP 812.01. As a prerequisite to the grant of this petition, the applicant has agreed to make an oral election, by telephone, without traverse. If the applicant refuses to make an election without traverse, or the examiner cannot reach the applicant after a reasonable effort, the examiner will treat the first claimed invention (invention defined by claim 1) as having being constructively elected without traverse for examination.

3. Office action:
   If it is determined that, after appropriate consultation, there is a potential rejection or any other issue to be addressed, the examiner will telephone the applicant and arrange an interview to discuss and resolve the issue. An Office action, other than a Notice of Allowance and Fee(s) Due (Notice of Allowance), will not be issued unless either: 1) an interview was conducted but did not result in agreed to action that places the application in condition for allowance, or, 2) a determination is made that an interview would be unlikely to result in the application being placed in condition for allowance, and 3) an internal conference has been held to review any rejection of any claim.

4. Time for Reply:
   An Office action other than a Notice of Allowance or a final Office action will set a shortened statutory period of one month or thirty days, whichever is longer, for reply with no extension of time available under 37 CFR 1.136(a). Failure to timely file a reply within this non-extendible period for reply will result in the abandonment of the application.

5. Reply by Applicant:
   A timely reply to an Office action other than the Notice of Allowance must be submitted electronically via EFS or EFS-web and limited to addressing the rejections, objections and requirement made. Any amendment that attempts to: 1) add claims which would result in more than three pending independent claims or more than twenty pending total claims; 2) present claims not encompassed by the pre-examination search or an updated accelerated examination support document; or 3) present claims that are directed a non-elected invention or an invention other than that previously claimed and examined in the application, will be treated as not fully responsive and will not be entered.

   For any amendment to the claims (including any new claim) that is not encompassed by the accelerated examination support document, applicant must provide an updated accelerated examination support document that encompasses the amended or new claims at the time of filing of the amendment.

   To proceed expeditiously with the examination, it is recommended that a reply with amendments made to any claim or with any new claim being added be

accompanied by an updated accelerated examination support document or a statement explaining how the amended or new claim is supported by the original accelerated examination support document.

6. Information Disclosure Statement (IDS):
   Any IDS filed during prosecution must be submitted electronically via EFS or EFS-web, accompanied by an updated accelerated examination support document, and be in compliance with 37 CFR 1.97 and 1.98.

7. Post-Allowance Processing:
   To expedite processing of the allowed application into a patent, the applicant must: 1) pay the required fees within one month of the date of the Notice of Allowance, and 2) not file any post allowance papers not required by the Office. In no event may the issue fee be paid and accepted later than three months from the date of the Notice of Allowance.

8. After-Final and Appeal Procedures:
   To expedite prosecution, after receiving the final Office action, applicant must: 1) promptly file a notice of appeal, an appeal brief and appeal fees; and 2) not request a pre-appeal brief conference.

   Any amendment, affidavit or other evidence filed after final Office action must comply with applicable rules and the requirements outlined in numbered paragraphs 5 and 6 above.

   On appeal, the application will proceed according to normal appeal procedures. After appeal, the application will again be treated special.

9. Proceedings Outside the Normal Examination Process:
   If the application becomes involved in a proceeding that is outside the normal examination process (e.g., a secrecy order, national security review, interference proceeding, petitions under 37 CFR 1.181, 182 or 183), the application will be treated special before and after such proceeding.

10. Final Disposition:
    The twelve month goal of this accelerated examination procedure ends with a final disposition. The mailing of a final Office action, a Notice of Allowance, the filing of a Notice of Appeal, or the filing of a Request for Continued Examination (RCE) is the final disposition.

If, during prosecution, a paper is not filed electronically using EFS-web, a reply is filed but is not fully responsive, the application is involved in an appeal, or a proceeding outside normal examination process, the application will still be examined expeditiously, however, the final disposition may occur more than twelve months from the filing of the application.

Any inquiry regarding this decision should be directed to Christine Tierney, Quality Assurance Specialist, at (571) 272-1055.

/Christine Tierney/

Christine Tierney
Quality Assurance Specialist
Technology Center 1700

UNITED STATES PATENT AND TRADEMARK OFFICE

UNITED STATES DEPARTMENT OF COMMERCE
United States Patent and Trademark Office
Address: COMMISSIONER FOR PATENTS
P.O. Box 1450
Alexandria, Virginia 22313-1450
www.uspto.gov

APPLICATION NO.	FILING DATE	FIRST NAMED INVENTOR	ATTORNEY DOCKET NO.	CONFIRMATION NO.
12/754,349		Yoshiki Haraguchi	04933-P0138A	6548

24126 7590 04/08/2010
ST. ONGE STEWARD JOHNSTON & REENS, LLC
986 BEDFORD STREET
STAMFORD, CT 06905-5619

EXAMINER

ART UNIT	PAPER NUMBER
3745	

MAIL DATE	DELIVERY MODE
04/08/2010	PAPER

Please find below and/or attached an Office communication concerning this application or proceeding.

The time period for reply, if any, is set in the attached communication.

UNITED STATES PATENT AND TRADEMARK OFFICE

Commissioner for Patents
United States Patent and Trademark Office
P.O. Box 1450
Alexandria, VA 22313-1450
www.uspto.gov

ST. ONGE STEWARD JOHNSTON & REENS, LLC
986 BEDFORD STREET
STAMFORD CT 06905-5619

In re Application of	:	
HARAGUCHI, YOSHIKI	:	DECISION ON REQUEST TO
Application No. 12/754,349	:	PARTICIPATE IN PATENT
Filed: April 5, 2010	:	PCT/PROSECUTION HIGHWAY
Attorney Docket No. 04933-P0138A	:	PROGRAM AND PETITION
For: METHOD FOR DE-ICING A BLADE OF A WIND TURBINE, A WIND TURBINE AND USE THEREOF	:	37 CFR 1.102(d)

This is a decision on the request to participate in the Patent Prosecution Highway (PPH) program and the petition under 37 CFR 1.102(d), filed April 5, 2010, to make the above-identified application special.

The request and petition are GRANTED.

A grantable request to participate in the PPH program and petition to make special require:
(1) The U.S. application must disclose an eligible relationship to one or more PCT applications filed in the JPO, EPO or USPTO;
(2) Applicant must submit a copy of the allowable/patentable claim(s) from the PCT application(s) latest international work product (the written opinion or the IPER) along with an English translation thereof and a statement that the English translation is accurate;
(3) All the claims in the U.S. application must sufficiently correspond or be amended to sufficiently correspond to the allowable/patentable claim(s) in the PCT application(s);
(4) Examination of the U.S. application has not begun;
(5) Applicant must submit a copy of the latest international work product from the PCT application containing the allowable/patentable claim(s) along with an English translation thereof and a statement that the English translation is accurate;
(6) Applicant must submit an IDS listing the documents cited by the PCT examiner in the international work product along with copies of documents except U.S. patents or U.S. patent application publications; and
(7) The required petition fee under 37 CFR 1.17(h).

In light of the petition being properly submitted, the request to participate in the PPH program and the petition comply with the above requirements. Accordingly, the above-identified application has been accorded "special" status.

The applicant is encouraged to cite and submit all relevant prior art references, if any, to facilitate examination in this application.

All other inquiries concerning the examination or status of the application should be directed to Edward Look, the SPE of Art Unit 3745, and 571-272-4820 and also accessible in the PAIR system at http://www.uspto.gov/ebc.index.html.

All other inquiries concerning the examination or status of the application should be directed to the Patent Application Information Retrieval (PAIR) system.

Currently, this application is undergoing pre-exam processing. The application will be forwarded to the examiner for action on the merits commensurate with this decision as soon as all pre-exam processing has been completed.

Telephone inquiries concerning this decision should be directed to Henry C. Yuen, at 571-272-4856.

The petition is **granted.**

/Henry C. Yuen/

Henry C. Yuen, Special Programs Examiner
Technology Center 3700 – Mechanical Engineering,
Manufacturing and Products
571-272-4856

UNITED STATES PATENT AND TRADEMARK OFFICE

UNITED STATES DEPARTMENT OF COMMERCE
United States Patent and Trademark Office
Address: COMMISSIONER FOR PATENTS
P.O. Box 1450
Alexandria, Virginia 22313-1450
www.uspto.gov

APPLICATION NO.	FILING DATE	FIRST NAMED INVENTOR	ATTORNEY DOCKET NO.	CONFIRMATION NO.
12/754,364	04/05/2010	Shinya Houman	1019952-000271	6573

21839 7590 04/26/2010
BUCHANAN, INGERSOLL & ROONEY PC
POST OFFICE BOX 1404
ALEXANDRIA, VA 22313-1404

EXAMINER

ART UNIT	PAPER NUMBER
2816	

NOTIFICATION DATE	DELIVERY MODE
04/26/2010	ELECTRONIC

Please find below and/or attached an Office communication concerning this application or proceeding.

The time period for reply, if any, is set in the attached communication.

Notice of the Office communication was sent electronically on above-indicated "Notification Date" to the following e-mail address(es):

ADIPFDD@bipc.com
offserv@bipc.com

UNITED STATES PATENT AND TRADEMARK OFFICE

Commissioner for Patents
United States Patent and Trademark Office
P.O. Box 1450
Alexandria, VA 22313-1450
www.uspto.gov

BUCHANAN, INGERSOLL & ROONEY PC
POST OFFICE BOX 1404
ALEXANDRIA VA 22313-1404

In re Application of	
HOUMAN et al.	**: DECISION ON REQUEST TO**
Application No.: 12/754,364	**: PARTICIPATE IN THE PATENT**
Filed: 05 April 2010	**: PROSECUTION HIGHWAY**
Attorney Docket No.: 1019952-000271	**: PROGRAM AND PETITION**
For: SUBSTRATE HOLDER,	**: TO MAKE SPECIAL UNDER**
DEPOSITION METHOD USING	**: 37 CFR 1.102(d)**
SUBSTRATE HOLDER, HARD DISK	
MANUFACTURING METHOD...	

This is a decision on the request to participate in the Patent Prosecution Highway (PPH) program and the petition under 37 CFR 1.102(d), filed 06 April 2010, to make the above-identified application special.

The request and petition are **GRANTED**.

Discussion

A grantable request to participate in the PPH pilot program and petition to make special require:

1. The U.S. application is

    a. a Paris Convention application which either
        i. validly claims priority under 35 U.S.C. 119(a) and 37 CFR 1.55 to one or more applications filed in the JPO, or
        ii. validly claims priority to a PCT application that contains no priority claims, or

    b. a national stage application under the PCT (an application which entered the national stage in the U.S. from a PCT international application after compliance with 35 U.S.C. 371), which PCT application
        i. validly claims priority to an application filed in the JPO, or
        ii. validly claims priority to a PCT application that contains no priority claims, or
        iii. contains no priority claim, or

    c. a so-called bypass application filed under 35 U.S.C. 111(a) which validly claims benefit under 35 U.S.C. 120 to a PCT application, which PCT application
        i. validly claims priority to an application filed in the JPO, or

ii. validly claims priority to a PCT application that contains no priority claims, or
iii. contains no priority claim;

2. Applicant must submit a copy of:
   a. The allowable/patentable claim(s) from the JPO application(s);
   b. An English translation of the allowable/patentable claim(s) and
   c. A statement that the English translation is accurate;
3. Applicant must:
   a. Ensure all the claims in the U.S. application must sufficiently correspond or be amended to sufficiently correspond to the allowable/patentable claim(s) in the JPO application(s) and
   b. Submit a claims correspondence table in English;
4. Examination of the U.S. application has <u>not</u> begun;
5. Applicant must submit:
   a. Documentation of prior office action:
      i. a copy of the office action(s) just prior to the "Decision to Grant a Patent" from each of the JPO application(s) containing the allowable/patentable claim(s) or
      ii. if the allowable/patentable claims(s) are from a "Notification of Reasons for Refusal" then the Notification of Reasons for Refusal or
      iii. if the JPO application is a first action allowance then no office action from the JPO is necessary should be indicated on the request/petition form;
   b. An English language translation of the JPO Office action from (5)(a)(i)-(ii) above
   c. A statement that the English translation is accurate;
6. Applicant must submit:
   a. An IDS listing the documents cited by the JPO examiner in the JPO office action (unless already submitted in this application)
   b. Copies of the documents except U.S. patents or U.S. patent application publications (unless already submitted in this application);
7. The required petition fee under 37 CFR 1.17(h).

The request to participate in the PPH pilot program and petition comply with the above requirements. Accordingly, the above-identified application has been accorded "special" status.

Inquiries concerning this decision should be directed to Lee W. Young at 571-272-4549.

All other inquiries concerning the examination or status of the application is accessible in the PAIR system at http://www.uspto.gov/ebc.index.html.

This application will be forwarded to the examiner for action on the merits commensurate with this decision once a formality review is completed.

Lee W. Young
TQAS
Technology Center 2800

UNITED STATES PATENT AND TRADEMARK OFFICE

Commissioner for Patents
United States Patent and Trademark Office
P.O. Box 1450
Alexandria, VA 22313-1450
www.uspto.gov

In re Application of
Chien-Hsing Chang

Application No. 12754740

Filed: April 6,2010

Attorney Docket No. IMM319US1

:DECISION ON PETITION TO MAKE SPECIAL
:UNDER 37 CFR 1.102(c)(1)

This is a decision on the electronic petition under 37 CFR 1.102 (c)(1), filed 11-JUN-2010 to make the above-identified application special based on applicant's age as set forth in MPEP § 708.02, Section IV.

The petition is **GRANTED**.

A grantable petition to make an application special under 37 CFR 1.102(c)(1), MPEP § 708.02, Section IV: Applicant's Age must include a statement by applicant or a registered practitioner having evidence that applicant is at least 65 years of age. No fee is required.

Accordingly, the above-identified application has been accorded "special" status and will be taken up for action by the examiner upon the completion of all pre-examination processing.

Telephone inquiries concerning this electronic decision should be directed to the Electronic Business Center at 866-217-9197.

All other inquiries concerning either the examination or status of the application should be directed to the Technology Center.

UNITED STATES PATENT AND TRADEMARK OFFICE

0 8 JUN 2010

Commissioner for Patents
United States Patent and Trademark Office
P.O. Box 1450
Alexandria, VA 22313-1450
www.uspto.gov

Keusey & Associates, P.C.
420 Jericho Tpke.
Suite 324
Jericho NY 11753

In re Application of: KALININ	:	
U.S. Application No.: 12/755,007	:	DECISION ON PETITION TO
Filing Date: March 19, 2008	:	REVIVE ABANDONED
Attorney's Docket No.: T0072US	:	APPLICATION UNDER 37
For: SAW TORQUE AND TEMPERATURE SENSOR	:	CFR 1.137(b)
WITH IMPROVED TEMPERATURE	:	
SENSITIVITY	:	

The petition to revive under 37 CFR 1.137(b) filed April 6, 2010 in the above-captioned application is hereby **GRANTED** as follows:

Applicant's statement that "the entire delay in filing the required reply from the due date for the required reply until the filing of a grantable petition under 37 C.F.R. § 1.137(b) was unintentional" and the prompt filing of the petition satisfies the requirement of 37 CFR 1.137(b)(3).

International application PCT/GB2008/000983 became abandoned as to the United States of America at midnight on December 15, 2009 for failure to timely pay the basic national fee. The filing of the present continuing application under 35 U.S.C. 111(a) is accepted as the appropriate response under 37 CFR 1.137(b). See MPEP § 711.03(c).

International application PCT/GB2008/000983 is being revived for purposes of continuity only and since continuity has been established by this decision reviving the international application, the international application is again abandoned in favor of the present continuing application number 12/755,007.

This application is being referred to the Office of Initial Patent Examination for further processing.

Derek A. Putonen
Attorney Advisor
Office of PCT Legal Administration
Telephone: (571) 272-3294

UNITED STATES PATENT AND TRADEMARK OFFICE

UNITED STATES DEPARTMENT OF COMMERCE
United States Patent and Trademark Office
Address: COMMISSIONER FOR PATENTS
P.O. Box 1450
Alexandria, Virginia 22313-1450
www.uspto.gov

APPLICATION NO.	FILING DATE	FIRST NAMED INVENTOR	ATTORNEY DOCKET NO.	CONFIRMATION NO.
12/755,241	04/06/2010	John Larry Sanders	39992-CIP1-CNT1	8237

23589 7590 04/29/2010
HOVEY WILLIAMS LLP
10801 Mastin Blvd., Suite 1000
Overland Park, KS 66210

EXAMINER

ART UNIT	PAPER NUMBER
1793	

MAIL DATE	DELIVERY MODE
04/29/2010	PAPER

Please find below and/or attached an Office communication concerning this application or proceeding.

The time period for reply, if any, is set in the attached communication.

UNITED STATES PATENT AND TRADEMARK OFFICE

Commissioner for Patents
United States Patent and Trademark Office
P.O. Box 1450
Alexandria, VA 22313-1450
www.uspto.gov

CST

4/29/10

In re application of
John Larry Sanders et al
Serial No. 12/755,241
Filed: April 6, 2010
For: QUICK DRYING POLYMERIC COATING

DECISION ON PETITION TO MAKE SPECIAL

This is a decision on the petition filed on April 6, 2010 to make the above-identified application special under the accelerated examination program.

The petition to make the application special is **DISMISSED.**

REGULATION AND PRACTICE

A grantable petition to make special under 37 C.F.R. § 1.102(d) and pursuant to the "Change to Practice for Petitions in Patent Applications to Make Special and for Accelerated Examination" published in the Federal Register on June 26, 2006 (71 Fed. Reg. 36323), must satisfy the following conditions:

I. Conditions Regarding the Application:

1. the application must be a non-reissue utility or design application filed under 37 CFR 1.111(a);
2. the application, the petition and the required fees must be filed electronically using the USPTO's electronic filing system (EFS), or EFS-web; if not filed electronically, a statement asserting that EFS and EFS-web were not available during the normal business hours;
3. at the time of filing, the application must be complete under 37 CFR 1.51 and in condition for examination;
4. the application must contain three or fewer independent claims and twenty or fewer total claims and the claims must be directed to a single invention.

II. Conditions Regarding the Petition:

The petition must:

1. be filed with the application;
2. include a statement that applicant agrees not to separately argue the patentability of any dependent claim during any appeal in the application;

3. include a statement that applicant agrees to make an election without traverse in a telephone interview;

4. include a statement that applicant agrees to conduct such an interview when requested by the examiner;

5. include a statement, made based on a good faith belief, that a preexamination search in compliance with the following requirements, was conducted, including an identification of the field of search by United States class and subclass, where applicable, and for database searches, the search logic or chemical structure or sequence used as a query, the name of the file(s) searched and the database service, and the date of the search.

The preexamination search must:

5.1 involve U.S. patents and patent application publications, foreign patent documents, and non-patent literature, unless the applicant can justify with reasonable certainty that no references more pertinent than those already identified are likely to be found in the eliminated sources and includes such a justification with this statement;

5.2. be directed to the claimed invention and encompass all of the features of the claims, giving the claims the broadest reasonable interpretation;

5.3. encompass the disclosed features that may be claimed.

6. must provide in support of the petition an accelerated examination support document.

An accelerated examination support document must include:

6.1. an information disclosure statement (IDS) in compliance with 37 CFR 1.98 citing each reference deemed most closely related to the subject matter of each of the claims;

6.2. an identification of all the limitations in the claims that are disclosed by the reference specifying where the limitation is disclosed in the cited reference;

6.3. a detailed explanation of how each of the claims are patentable over the references cited with particularity required by 37 CFR 1.111(b) and (c);

6.4. a concise statement of the utility of the invention as defined in each of the independent claims (unless the application is a design application);

6.5. a showing of where each limitation of the claims finds support under 35 USC 112, first paragraph, in the written description of the specification. If applicable, the showing must also identify: (1) each means- (or step) plus-function claim element that invokes consideration under 35 USC 112, sixth paragraph; and (2) the structure, material, or acts in the specification that corresponds to each means- (or step) plus-function claim element that invokes consideration under 35 USC 112, sixth paragraph; if the application claims the benefit of one or more applications under title 35, United States Code, the showing must also include where each limitation of the claims finds support under 35 USC 112, first paragraph, in each such application in which such supports exists;

6.6. an identification of any cited references that may be disqualified under 35 USC 103(c).

REVIEW OF FACTS

The conditions regarding the application (section I, subsections 1-4) discussed above are considered to have been met. Additionally, the conditions regarding the petition, section II, subsections 1-4 and 6, are considered to have been met. However, the petition fails to comply with condition II, subsection 5.

It appears that the search is incomplete. Note that a search in Class 71/subclasses 34, 50, 58 and 63 is also required.

Therefore, the petition fails to meet the required conditions to be accorded special status under the accelerated examination procedure.

DECISION

For the above-stated reasons, the petition is dismissed. The application will therefore be taken up by the examiner in its regular turn.

Petitioner is given a single opportunity to perfect the petition. Any request for reconsideration of this decision must be submitted within 1 (one) month or 30 (thirty) days, whichever is longer, (no extension of time under 37 CFR 1.136(a)) from the date of this decision in order to be considered timely. Any request for reconsideration must address the deficiencies indicated above.

Petitioner is reminded that, upon granting of the special status of the application on request for reconsideration, the application will be processed expeditiously. However, due to the dismissal of the instant petition, examination may not be completed within twelve months of the filing date of the application.

Any inquiry regarding this decision should be directed to Christine Tierney, Quality Assurance Specialist, at (571) 272-1055.

/Christine Tierney/

Christine Tierney
Quality Assurance Specialist
Technology Center 1700

UNITED STATES PATENT AND TRADEMARK OFFICE

UNITED STATES DEPARTMENT OF COMMERCE
United States Patent and Trademark Office
Address: COMMISSIONER FOR PATENTS
P.O. Box 1450
Alexandria, Virginia 22313-1450
www.uspto.gov

APPLICATION NO.	FILING DATE	FIRST NAMED INVENTOR	ATTORNEY DOCKET NO.	CONFIRMATION NO.
12/755,241	04/06/2010	John Larry Sanders	39992-CIP1-CNT1	8237

23589 7590 06/09/2010
HOVEY WILLIAMS LLP
10801 Mastin Blvd., Suite 1000
Overland Park, KS 66210

EXAMINER
SMITH, JENNIFER A

ART UNIT	PAPER NUMBER
1793	

MAIL DATE	DELIVERY MODE
06/09/2010	PAPER

Please find below and/or attached an Office communication concerning this application or proceeding.

The time period for reply, if any, is set in the attached communication.

UNITED STATES PATENT AND TRADEMARK OFFICE

Commissioner for Patents
United States Patent and Trademark Office
P.O. Box 1450
Alexandria, VA 22313-1450
www.uspto.gov

JUN 09 2010

CST

In re application of	:	
John Larry Sanders et al	:	
Serial No. 12/755,241	:	DECISION ON PETITION
Filed: April 6, 2010	:	TO MAKE SPECIAL
For: QUICK DRYING POLYMERIC COATING	:	

This is a decision on the Request for Reconsideration of Petition to Make Special under the Accelerated Examination Program filed on May 25, 2010 to make the above-identified application special.

The petition to make the application special is **GRANTED.**

The application is eligible for accelerated examination and the petition complies with the conditions for granting the application special status pursuant to the "Change to Practice for Petitions in Patent Applications to Make Special and for Accelerated Examination" published June 26, 2006, in the Federal Register. (71 Fed. Reg. 36323).

The prosecution of the instant application will be conducted expeditiously according to the following guidelines.

1. The application will be docketed to an examiner and taken up for action within two weeks of the date of this decision.

2. Restriction Practice:
   If the examiner determines that the claims are not directed to a single invention, a telephone request to elect one single invention will be made pursuant to MPEP 812.01. As a prerequisite to the grant of this petition, the applicant has agreed to make an oral election, by telephone, without traverse. If the applicant refuses to make an election without traverse, or the examiner cannot reach the applicant after a reasonable effort, the examiner will treat the first claimed invention (invention defined by claim 1) as having being constructively elected without traverse for examination.

3. Office action:
   If it is determined that, after appropriate consultation, there is a potential rejection or any other issue to be addressed, the examiner will telephone the applicant and arrange an interview to discuss and resolve the issue. An Office action, other than a Notice of Allowance and Fee(s) Due (Notice of Allowance), will not be issued unless either: 1) an interview was conducted but did not result in agreed to action that places the application in condition for allowance, or, 2) a determination is made that an interview would be unlikely to result in the application being placed in condition for allowance, and 3) an internal conference has been held to review any rejection of any claim.

4. Time for Reply:
   An Office action other than a Notice of Allowance or a final Office action will set a shortened statutory period of one month or thirty days, whichever is longer, for reply with no extension of time available under 37 CFR 1.136(a). Failure to timely file a reply within this non-extendible period for reply will result in the abandonment of the application.

5. Reply by Applicant:
   A timely reply to an Office action other than the Notice of Allowance must be submitted electronically via EFS or EFS-web and limited to addressing the rejections, objections and requirement made. Any amendment that attempts to: 1) add claims which would result in more than three pending independent claims or more than twenty pending total claims; 2) present claims not encompassed by the pre-examination search or an updated accelerated examination support document; or 3) present claims that are directed a non-elected invention or an invention other than that previously claimed and examined in the application, will be treated as not fully responsive and will not be entered.

   For any amendment to the claims (including any new claim) that is not encompassed by the accelerated examination support document, applicant must provide an updated accelerated examination support document that encompasses the amended or new claims at the time of filing of the amendment.

   To proceed expeditiously with the examination, it is recommended that a reply with amendments made to any claim or with any new claim being added be accompanied by an updated accelerated examination support document or a statement explaining how the amended or new claim is supported by the original accelerated examination support document.

6. Information Disclosure Statement (IDS):
   Any IDS filed during prosecution must be submitted electronically via EFS or EFS-web, accompanied by an updated accelerated examination support document, and be in compliance with 37 CFR 1.97 and 1.98.

7. Post-Allowance Processing:
   To expedite processing of the allowed application into a patent, the applicant must: 1) pay the required fees within one month of the date of the Notice of Allowance, and 2) not file any post allowance papers not required by the Office. In no event may the issue fee be paid and accepted later than three months from the date of the Notice of Allowance.

8. After-Final and Appeal Procedures:
   To expedite prosecution, after receiving the final Office action, applicant must: 1) promptly file a notice of appeal, an appeal brief and appeal fees; and 2) not request a pre-appeal brief conference.

   Any amendment, affidavit or other evidence filed after final Office action must comply with applicable rules and the requirements outlined in numbered paragraphs 5 and 6 above.

   On appeal, the application will proceed according to normal appeal procedures. After appeal, the application will again be treated special.

9. Proceedings Outside the Normal Examination Process:
   If the application becomes involved in a proceeding that is outside the normal examination process (e.g., a secrecy order, national security review, interference proceeding, petitions under 37 CFR 1.181, 182 or 183), the application will be treated special before and after such proceeding.

10. Final Disposition:
    The twelve month goal of this accelerated examination procedure ends with a final disposition. The mailing of a final Office action, a Notice of Allowance, the filing of a Notice of Appeal, or the filing of a Request for Continued Examination (RCE) is the final disposition.

If, during prosecution, a paper is not filed electronically using EFS-web, a reply is filed but is not fully responsive, the application is involved in an appeal, or a proceeding outside normal examination process, the application will still be examined expeditiously, however, the final disposition may occur more than twelve months from the filing of the application.

Any inquiry regarding this decision should be directed to Christine Tierney, Quality Assurance Specialist, at (571) 272-1055.

/Christine Tierney/

Christine Tierney
Quality Assurance Specialist
Technology Center 1700

UNITED STATES PATENT AND TRADEMARK OFFICE

Commissioner for Patents
United States Patent and Trademark Office
P.O. Box 1450
Alexandria, VA 22313-1450
www.uspto.gov

In re Application of
David C. Orlowski

Application No. 12757040

Filed:

Attorney Docket No. USPA-0131

:DECISION ON PETITION TO MAKE SPECIAL
:UNDER 37 CFR 1.102(c)(1)

This is a decision on the electronic petition under 37 CFR 1.102 (c)(1), filed 09-APR-2010 to make the above-identified application special based on applicant's age as set forth in MPEP § 708.02, Section IV.

The petition is **GRANTED**.

A grantable petition to make an application special under 37 CFR 1.102(c)(1), MPEP § 708.02, Section IV: Applicant's Age must include a statement by applicant or a registered practitioner having evidence that applicant is at least 65 years of age. No fee is required.

Accordingly, the above-identified application has been accorded "special" status and will be taken up for action by the examiner upon the completion of all pre-examination processing.

Telephone inquiries concerning this electronic decision should be directed to the Electronic Business Center at 866-217-9197.

All other inquiries concerning either the examination or status of the application should be directed to the Technology Center.

UNITED STATES PATENT AND TRADEMARK OFFICE

UNITED STATES DEPARTMENT OF COMMERCE
United States Patent and Trademark Office
Address: COMMISSIONER FOR PATENTS
P.O. Box 1450
Alexandria, Virginia 22313-1450
www.uspto.gov

APPLICATION NO.	FILING DATE	FIRST NAMED INVENTOR	ATTORNEY DOCKET NO.	CONFIRMATION NO.
12/757,844	04/09/2010	Fredrik Berggren	HW 0713611AE	3649

74365 7590 05/06/2010
Slater & Matsil, L.L.P.
17950 Preston Road, Suite 1000
Dallas, TX 75252

EXAMINER
TROST IV, WILLIAM GEORGE

ART UNIT	PAPER NUMBER
2472	

MAIL DATE	DELIVERY MODE
05/06/2010	PAPER

Please find below and/or attached an Office communication concerning this application or proceeding.

The time period for reply, if any, is set in the attached communication.

UNITED STATES PATENT AND TRADEMARK OFFICE

Commissioner for Patents
United States Patent and Trademark Office
P.O. Box 1450
Alexandria, VA 22313-1450
www.uspto.gov

MAILED

MAY 06 2010

DIRECTOR OFFICE
TECHNOLOGY CENTER 2400

Slater & Matsil, L.L.P.
17950 Preston Road, Suite 1000
Dallas TX 75252

In re Application of:
BERGGREN, FREDRIK et al.
Serial No.: 12/757,844
Filed: April 09, 2010
Docket Number: HW 0713611AE
Title: ENCODING METHOD AND APPARATUS FOR FRAME SYNCHRONIZATION SIGNAL

DECISION ON PETITION TO MAKE SPECIAL FOR NEW APPLICATION UNDER 37 C.F.R. § 1.102

This is a decision on the petition filed on April 09, 2010, to make the above-identified application special for accelerated examination procedure in accordance with 37 C.F.R. § 1.102(c)(2).

The petition to make the application special is GRANTED.

The application is eligible for accelerated examination and the petition complies with the conditions for granting the application special status pursuant to M.P.E.P. §708.02(a) and to the "Change to Practice for Petitions in Patent Applications to Make Special and for Accelerated Examination" published June 26, 2006, in the Federal Register. (71 Fed. Reg. 36323).

The prosecution of the instant application will be conducted expeditiously according to the following guidelines.

1. The application will be docketed to an examiner and taken up for action within two weeks of the date of this decision.

2. Restriction Practice:
   If the examiner determines that the claims are not directed to a single invention, a telephone request to elect one single invention will be made pursuant to M.P.E.P. §812.01. As a prerequisite to the grant of this petition, the applicant has agreed to make an oral election, by telephone, without traverse. If the applicant refuses to make an election without traverse, or the examiner cannot reach the applicant after a reasonable effort, the examiner will treat the first claimed invention (invention defined by claim 1) as having being constructively elected without traverse for examination.

3. Office action:
   If it is determined that, after appropriate consultation, there is a potential rejection or any other issue to be addressed, the examiner will telephone the applicant and arrange an interview to discuss and resolve the issue. An Office action, other than a Notice of Allowance and Fee(s) Due (Notice of Allowance), will not be issued unless either: 1) an interview was conducted but did not result in agreed to action that places the application in condition for allowance, or, 2) a determination is made that an interview would be unlikely to result in the application being placed in condition for allowance, and 3) an internal conference has been held to review any rejection of any claim.

4. Time for Reply:
   An Office action other than a Notice of Allowance or a final Office action will set a shortened statutory period of one month or thirty days, whichever is longer, for reply with no extension of time available under 37 C.F.R. §1.136(a). Failure to timely file a reply within this non-extendible period for reply will result in the abandonment of the application.

5. Reply by Applicant:
   A timely reply to an Office action other than the Notice of Allowance must be submitted electronically via EFS or EFS-web and limited to addressing the rejections, objections and requirement made. Any amendment that attempts to: 1) add claims which would result in more than three pending independent claims or more than twenty pending total claims; 2) present claims not encompassed by the pre-examination search or an updated accelerated examination support document; or 3) present claims that are directed a non-elected invention or an invention other than that previously claimed and examined in the application, will be treated as not fully responsive and will not be entered.

   For any amendment to the claims (including any new claim) that is not encompassed by the accelerated examination support document, applicant must provide an updated accelerated examination support document that encompasses the amended or new claims at the time of filing of the amendment.

   To proceed expeditiously with the examination, it is recommended that a reply with amendments made to any claim or with any new claim being added be accompanied by an updated accelerated examination support document or a statement explaining how the amended or new claim is supported by the original accelerated examination support document.

6. Information Disclosure Statement (IDS):
   Any IDS filed during prosecution must be submitted electronically via EFS or EFS-web, accompanied by an updated accelerated examination support document, and be in compliance with 37 C.F.R. §1.97 and §1.98.

7. Post-Allowance Processing:
   To expedite processing of the allowed application into a patent, the applicant must: 1) pay the required fees within one month of the date of the Notice of Allowance, and 2) not

file any post allowance papers not required by the Office. In no event may the issue fee be paid and accepted later than three months from the date of the Notice of Allowance.

8. After-Final and Appeal Procedures:
   To expedite prosecution, after receiving the final Office action, applicant must: 1) promptly file a notice of appeal, an appeal brief and appeal fees; and 2) not request a pre-appeal brief conference.

   Any amendment, affidavit or other evidence filed after final Office action must comply with applicable rules and the requirements outlined in numbered paragraphs 5 and 6 above.

   On appeal, the application will proceed according to normal appeal procedures. After appeal, the application will again be treated special.

9. Proceedings Outside the Normal Examination Process:
   If the application becomes involved in a proceeding that is outside the normal examination process (e.g., a secrecy order, national security review, interference proceeding, petitions under 37 C.F.R. §1.181, §1.182 or §1.183), the application will be treated special before and after such proceeding.

10. Final Disposition:
    The twelve-month goal of this accelerated examination procedure ends with a final disposition. The mailing of a final Office action, a Notice of Allowance, the filing of a Notice of Appeal, or the filing of a Request for Continued Examination (RCE) is the final disposition. However, the application retains its special status after the filing of an RCE.

If, during prosecution, a paper is not filed electronically using EFS-web, a reply is filed but is not fully responsive, the application is involved in an appeal or a proceeding outside normal examination process, the application will still be examined expeditiously, however, the final disposition may occur more than twelve months from the filing of the application.

Any inquiry regarding this decision should be directed to the undersigned at (571) 272-3126.

Chau T. Nguyen

Chau T. Nguyen
Workgroup Quality Assurance Specialist
Technology Center 2400
Network, Multiplexing, Cable and Security

UNITED STATES PATENT AND TRADEMARK OFFICE

Commissioner for Patents
United States Patent and Trademark Office
P.O. Box 1450
Alexandria, VA 22313-1450
www.uspto.gov

MAIL

MAY 11 2010

DIRECTOR'S OFFICE
TECHNOLOGY CENTER 2600

Clause Eight Intell. Prop. Service
P.O Box 131270
Carlsbad CA 92013

In re Application of:
BECKER, DENNIS, et al.
Serial No.: 12/758,009
Filed: April 11, 2010

Title: **VOICE MESSAGE TRANSMISSION AND RETRIEVAL**

DECISION ON PETITION TO MAKE SPECIAL FOR NEW APPLICATION UNDER 37 C.F.R. § 1.102 & M.P.E.P. § 708.02

The petition to make the application special filed April 11, 2010 is **GRANTED**.

The application is eligible for accelerated examination and the petition complies with the conditions for granting the application special status pursuant to the "Change to Practice for Petitions in Patent Applications to Make Special and for Accelerated Examination" published June 26, 2006, in the Federal Register. (71 Fed. Reg. 36323).

The prosecution of the instant application will be conducted expeditiously according to the following guidelines.

1. The application will be docketed to an examiner and taken up for action within two weeks of the date of this decision.

2. Restriction Practice:
   If the examiner determines that the claims are not directed to a single invention, a telephone request to elect one single invention will be made pursuant to MPEP 812.01. As a prerequisite to the grant of this petition, the applicant has agreed to make an oral election, by telephone, without traverse. If the applicant refuses to make an election without traverse, or the examiner cannot reach the applicant after a reasonable effort, the examiner will treat the first claimed invention (invention defined by claim 1) as having being constructively elected without traverse for examination.

3. Office action:
   If it is determined that, after appropriate consultation, there is a potential rejection or any other issue to be addressed, the examiner will telephone the applicant and arrange an

interview to discuss and resolve the issue. An Office action, other than a Notice of Allowance and Fee(s) Due (Notice of Allowance), will not be issued unless either: 1) an interview was conducted but did not result in agreed to action that places the application in condition for allowance, or, 2) a determination is made that an interview would be unlikely to result in the application being placed in condition for allowance, and 3) an internal conference has been held to review any rejection of any claim.

4. Time for Reply:
An Office action other than a Notice of Allowance or a final Office action will set a shortened statutory period of one month or thirty days, whichever is longer, for reply with no extension of time available under 37 CFR 1.136(a). Failure to timely file a reply within this non-extendible period for reply will result in the abandonment of the application.

5. Reply by Applicant:
A timely reply to an Office action other than the Notice of Allowance must be submitted electronically via EFS or EFS-web and limited to addressing the rejections, objections and requirement made. Any amendment that attempts to: 1) add claims which would result in more than three pending independent claims or more than twenty pending total claims; 2) present claims not encompassed by the pre-examination search or an updated accelerated examination support document; or 3) present claims that are directed a non-elected invention or an invention other than that previously claimed and examined in the application, will be treated as not fully responsive and will not be entered.

   For any amendment to the claims (including any new claim) that is not encompassed by the accelerated examination support document, applicant must provide an updated accelerated examination support document that encompasses the amended or new claims at the time of filing of the amendment.

   To proceed expeditiously with the examination, it is recommended that a reply with amendments made to any claim or with any new claim being added be accompanied by an updated accelerated examination support document or a statement explaining how the amended or new claim is supported by the original accelerated examination support document.

6. Information Disclosure Statement (IDS):
Any IDS filed during prosecution must be submitted electronically via EFS or EFS-web, accompanied by an updated accelerated examination support document, and be in compliance with 37 CFR 1.97 and 1.98.

7. Post-Allowance Processing:
To expedite processing of the allowed application into a patent, the applicant must: 1) pay the required fees within one month of the date of the Notice of Allowance, and 2) not file any post allowance papers not required by the Office. In no event may the issue fee be paid and accepted later than three months from the date of the Notice of Allowance.

8. After-Final and Appeal Procedures:
   To expedite prosecution, after receiving the final Office action, applicant must: 1) promptly file a notice of appeal, an appeal brief and appeal fees; and 2) not request a pre-appeal brief conference.

   Any amendment, affidavit or other evidence filed after final Office action must comply with applicable rules and the requirements outlined in numbered paragraphs 5 and 6 above.

   On appeal, the application will proceed according to normal appeal procedures. After appeal, the application will again be treated special.

9. Proceedings Outside the Normal Examination Process:
   If the application becomes involved in a proceeding that is outside the normal examination process (e.g., a secrecy order, national security review, interference proceeding, petitions under 37 CFR 1.181, 182 or 183), the application will be treated special before and after such proceeding.

10. Final Disposition:
    The twelve month goal of this accelerated examination procedure ends with a final disposition. The mailing of a final Office action, a Notice of Allowance, the filing of a Notice of Appeal, or the filing of a Request for Continued Examination (RCE) is the final disposition.

If, during prosecution, a paper is not filed electronically using EFS-web, a reply is filed but is not fully responsive, the application is involved in an appeal, or a proceeding outside normal examination process, the application will still be examined expeditiously, however, the final disposition may occur more than twelve months from the filing of the application.

Any inquiry regarding this decision should be directed to Ken Wieder, Quality Assurance Specialist, at (571) 272-2986.

Kenneth A. Wieder
Quality Assurance Specialist
Technology Center 2600
Communications

UNITED STATES PATENT AND TRADEMARK OFFICE

UNITED STATES DEPARTMENT OF COMMERCE
United States Patent and Trademark Office
Address: COMMISSIONER FOR PATENTS
P.O. Box 1450
Alexandria, Virginia 22313-1450
www.uspto.gov

APPLICATION NO.	FILING DATE	FIRST NAMED INVENTOR	ATTORNEY DOCKET NO.	CONFIRMATION NO.
12/760,117	04/14/2010	Donald GENIESSE	055005-5003-01	8410

9629 7590 06/11/2010
MORGAN LEWIS & BOCKIUS LLP
1111 PENNSYLVANIA AVENUE NW
WASHINGTON, DC 20004

EXAMINER
STALDER, MELISSA A

ART UNIT	PAPER NUMBER
1793	

MAIL DATE	DELIVERY MODE
06/11/2010	PAPER

Please find below and/or attached an Office communication concerning this application or proceeding.

The time period for reply, if any, is set in the attached communication.

UNITED STATES PATENT AND TRADEMARK OFFICE

Commissioner for Patents
United States Patent and Trademark Office
P.O. Box 1450
Alexandria, VA 22313-1450
www.uspto.gov

6/11/10

CST

In re application of
Donald Geniesse
Serial No. 12/760,117
Filed: April 14, 2010
For: PROCESS FOR REMOVAL OF ALUMINUM OXIDES FROM AQUEOUS MEDIA

DECISION ON PETITION TO MAKE SPECIAL

This is a decision on the petition filed on April 14, 2010 to make the above-identified application special under the accelerated examination program.

The petition to make the application special is **DISMISSED.**

REGULATION AND PRACTICE

A grantable petition to make special under 37 C.F.R. § 1.102(d) and pursuant to the "Change to Practice for Petitions in Patent Applications to Make Special and for Accelerated Examination" published in the Federal Register on June 26, 2006 (71 Fed. Reg. 36323), must satisfy the following conditions:

I. Conditions Regarding the Application:

1. the application must be a non-reissue utility or design application filed under 37 CFR 1.111(a);
2. the application, the petition and the required fees must be filed electronically using the USPTO's electronic filing system (EFS), or EFS-web; if not filed electronically, a statement asserting that EFS and EFS-web were not available during the normal business hours;
3. at the time of filing, the application must be complete under 37 CFR 1.51 and in condition for examination;
4. the application must contain three or fewer independent claims and twenty or fewer total claims and the claims must be directed to a single invention.

II. Conditions Regarding the Petition:

The petition must:

1. be filed with the application;

2. include a statement that applicant agrees not to separately argue the patentability of any dependent claim during any appeal in the application;

3. include a statement that applicant agrees to make an election without traverse in a telephone interview;

4. include a statement that applicant agrees to conduct such an interview when requested by the examiner;

5. include a statement, made based on a good faith belief, that a preexamination search in compliance with the following requirements, was conducted, including an identification of the field of search by United States class and subclass, where applicable, and for database searches, the search logic or chemical structure or sequence used as a query, the name of the file(s) searched and the database service, and the date of the search.

The preexamination search must:

5.1 involve U.S. patents and patent application publications, foreign patent documents, and non-patent literature, unless the applicant can justify with reasonable certainty that no references more pertinent than those already identified are likely to be found in the eliminated sources and includes such a justification with this statement;

5.2. be directed to the claimed invention and encompass all of the features of the claims, giving the claims the broadest reasonable interpretation;

5.3. encompass the disclosed features that may be claimed.

6. must provide in support of the petition an accelerated examination support document.

An accelerated examination support document must include:

6.1. an information disclosure statement (IDS) in compliance with 37 CFR 1.98 citing each reference deemed most closely related to the subject matter of each of the claims;

6.2. an identification of all the limitations in the claims that are disclosed by the reference specifying where the limitation is disclosed in the cited reference;

6.3. a detailed explanation of how each of the claims are patentable over the references cited with particularity required by 37 CFR 1.111(b) and (c);

6.4. a concise statement of the utility of the invention as defined in each of the independent claims (unless the application is a design application);

6.5. a showing of where each limitation of the claims finds support under 35 USC 112, first paragraph, in the written description of the specification. If applicable, the showing must also identify: (1) each means- (or step) plus-function claim element that invokes consideration under 35 USC 112, sixth paragraph; and (2) the structure, material, or acts in the specification that corresponds to each means- (or step) plus-function claim element that invokes consideration under 35 USC 112, sixth paragraph; if the application claims the benefit of one or more applications under title 35, United States Code, the showing must also include where each limitation of the claims finds support under 35 USC 112, first paragraph, in each such application in which such supports exists;

6.6. an identification of any cited references that may be disqualified under 35 USC 103(c).

REVIEW OF FACTS

The conditions regarding the application (section I, subsections 1-4) discussed above are considered to have been met. Additionally, the conditions regarding the petition, section II, subsections 1-4, are considered to have been met. However, the petition fails to comply with condition II, subsections 5 and 6.

First, it appears that the search is incomplete. Note that a search in Class 423/subclasses 115, 119, 122 and 131; Class 210/subclasses 679, 682, 683, 717, 747, 666, 667, 670, 682, 688, 691, 724, 711, 728, 908, 912 and 913; Class 588/subclasses 4, 14, 251, 256, 252, 257, 13; Class 976, DIG 380 is also required. Furthermore, from page 3 of the preexamination search document, it appears that only the claims were searched in each of the databases. It appears that a search including the entire document, and not only the claims, would be useful.

Secondly, it is required that petitioner provide a showing of where <u>each</u> limitation of each of the claims finds support under 35 USC 112, first paragraph, in the written description of the present specification. Merely stating that support for the claim as a whole, is found in various paragraphs of the specification, is not sufficient.

DECISION

For the above-stated reasons, the petition is dismissed. The application will therefore be taken up by the examiner in its regular turn.

Petitioner is given a single opportunity to perfect the petition. Any request for reconsideration of this decision must be submitted within 1 (one) month or 30 (thirty) days, whichever is longer, (no extension of time under 37 CFR 1.136(a)) from the date of this decision in order to be considered timely. Any request for reconsideration must address the deficiencies indicated above.

Petitioner is reminded that, upon granting of the special status of the application on request for reconsideration, the application will be processed expeditiously. However, due to the dismissal of the instant petition, examination may not be completed within twelve months of the filing date of the application.

Any inquiry regarding this decision should be directed to Christine Tierney, Quality Assurance Specialist, at (571) 272-1055.

/Christine Tierney/

Christine Tierney
Quality Assurance Specialist
Technology Center 1700

UNITED STATES PATENT AND TRADEMARK OFFICE

UNITED STATES DEPARTMENT OF COMMERCE
United States Patent and Trademark Office
Address: COMMISSIONER FOR PATENTS
P.O. Box 1450
Alexandria, Virginia 22313-1450
www.uspto.gov

APPLICATION NO.	FILING DATE	FIRST NAMED INVENTOR	ATTORNEY DOCKET NO.	CONFIRMATION NO.
12/760,117	04/14/2010	Donald GENIESSE	055005-5003-01	8410

9629 7590 07/20/2010
MORGAN LEWIS & BOCKIUS LLP
1111 PENNSYLVANIA AVENUE NW
WASHINGTON, DC 20004

EXAMINER
STALDER, MELISSA A

ART UNIT	PAPER NUMBER
1793	

MAIL DATE	DELIVERY MODE
07/20/2010	PAPER

Please find below and/or attached an Office communication concerning this application or proceeding.

The time period for reply, if any, is set in the attached communication.

UNITED STATES PATENT AND TRADEMARK OFFICE

Commissioner for Patents
United States Patent and Trademark Office
P.O. Box 1450
Alexandria, VA 22313-1450
www.uspto.gov

JUL 20 2010

CST

In re application of Donald Geniesse Serial No. 12/760,117 Filed: April 14, 2010 For: PROCESS FOR REMOVAL OF ALUMINUM OXIDES FROM AQUEOUS MEDIA	:	DECISION ON PETITION TO MAKE SPECIAL

This is a decision on the Request for Reconsideration of Petition to Make Special under the Accelerated Examination Program filed on July 12, 2010 to make the above-identified application special.

The petition to make the application special is **GRANTED.**

The application is eligible for accelerated examination and the petition complies with the conditions for granting the application special status pursuant to the "Change to Practice for Petitions in Patent Applications to Make Special and for Accelerated Examination" published June 26, 2006, in the Federal Register. (71 Fed. Reg. 36323).

The prosecution of the instant application will be conducted expeditiously according to the following guidelines.

1. The application will be docketed to an examiner and taken up for action within two weeks of the date of this decision.

2. Restriction Practice:
   If the examiner determines that the claims are not directed to a single invention, a telephone request to elect one single invention will be made pursuant to MPEP 812.01. As a prerequisite to the grant of this petition, the applicant has agreed to make an oral election, by telephone, without traverse. If the applicant refuses to make an election without traverse, or the examiner cannot reach the applicant after a reasonable effort, the examiner will treat the first claimed invention (invention defined by claim 1) as having being constructively elected without traverse for examination.

3. Office action:
   If it is determined that, after appropriate consultation, there is a potential rejection or any other issue to be addressed, the examiner will telephone the applicant and arrange an interview to discuss and resolve the issue. An Office action, other than a Notice of Allowance and Fee(s) Due (Notice of Allowance), will not be issued unless either: 1) an interview was conducted but did not result in agreed to action that places the application in condition for allowance, or, 2) a determination is made that an interview would be unlikely to result in the application being placed in condition for allowance, and 3) an internal conference has been held to review any rejection of any claim.

4. Time for Reply:
   An Office action other than a Notice of Allowance or a final Office action will set a shortened statutory period of one month or thirty days, whichever is longer, for reply with no extension of time available under 37 CFR 1.136(a). Failure to timely file a reply within this non-extendible period for reply will result in the abandonment of the application.

5. Reply by Applicant:
   A timely reply to an Office action other than the Notice of Allowance must be submitted electronically via EFS or EFS-web and limited to addressing the rejections, objections and requirement made. Any amendment that attempts to: 1) add claims which would result in more than three pending independent claims or more than twenty pending total claims; 2) present claims not encompassed by the pre-examination search or an updated accelerated examination support document; or 3) present claims that are directed a non-elected invention or an invention other than that previously claimed and examined in the application, will be treated as not fully responsive and will not be entered.

   For any amendment to the claims (including any new claim) that is not encompassed by the accelerated examination support document, applicant must provide an updated accelerated examination support document that encompasses the amended or new claims at the time of filing of the amendment.

   To proceed expeditiously with the examination, it is recommended that a reply with amendments made to any claim or with any new claim being added be accompanied by an updated accelerated examination support document or a statement explaining how the amended or new claim is supported by the original accelerated examination support document.

6. Information Disclosure Statement (IDS):
   Any IDS filed during prosecution must be submitted electronically via EFS or EFS-web, accompanied by an updated accelerated examination support document, and be in compliance with 37 CFR 1.97 and 1.98.

7. Post-Allowance Processing:
   To expedite processing of the allowed application into a patent, the applicant must: 1) pay the required fees within one month of the date of the Notice of Allowance, and 2) not file any post allowance papers not required by the Office. In no event may the issue fee be paid and accepted later than three months from the date of the Notice of Allowance.

8. After-Final and Appeal Procedures:
   To expedite prosecution, after receiving the final Office action, applicant must: 1) promptly file a notice of appeal, an appeal brief and appeal fees; and 2) not request a pre-appeal brief conference.

   Any amendment, affidavit or other evidence filed after final Office action must comply with applicable rules and the requirements outlined in numbered paragraphs 5 and 6 above.

   On appeal, the application will proceed according to normal appeal procedures. After appeal, the application will again be treated special.

9. Proceedings Outside the Normal Examination Process:
   If the application becomes involved in a proceeding that is outside the normal examination process (e.g., a secrecy order, national security review, interference proceeding, petitions under 37 CFR 1.181, 182 or 183), the application will be treated special before and after such proceeding.

10. Final Disposition:
    The twelve month goal of this accelerated examination procedure ends with a final disposition. The mailing of a final Office action, a Notice of Allowance, the filing of a Notice of Appeal, or the filing of a Request for Continued Examination (RCE) is the final disposition.

If, during prosecution, a paper is not filed electronically using EFS-web, a reply is filed but is not fully responsive, the application is involved in an appeal, or a proceeding outside normal examination process, the application will still be examined expeditiously, however, the final disposition may occur more than twelve months from the filing of the application.

Any inquiry regarding this decision should be directed to Christine Tierney, Quality Assurance Specialist, at (571) 272-1055.

/Christine Tierney/

Christine Tierney
Quality Assurance Specialist
Technology Center 1700

UNITED STATES PATENT AND TRADEMARK OFFICE

Commissioner for Patents
United States Patent and Trademark Office
P.O. Box 1450
Alexandria, VA 22313-1450
www.uspto.gov

MAIL

JUN 07 2010

DIRECTOR'S OFFICE
TECHNOLOGY CENTER 2600

Stolowitz Ford Cowger LLP
621 SW Morrison St
Suite 600
Portland OR 97205

In re Application of:
MARTIN, FRANCISCO
Serial No.: 12/763,420
Filed: April 20, 2010

Title: **SPORTING EVENT IMAGE CAPTURE, PROCESSING AND PUBLICATION**

DECISION ON PETITION TO MAKE SPECIAL FOR NEW APPLICATION UNDER 37 C.F.R. § 1.102 & M.P.E.P. § 708.02

This is a decision on the petition filed on April 20, 2010 to make the above-identified application special for accelerated examination procedure under 37 C.F.R. § 1.102(d).

The petition to make the application special is **DISMISSED**.

REGULATION AND PRACTICE

A grantable petition to make special under 37 C.F.R. § 1.102(d) and pursuant to the "Change to Practice for Petitions in Patent Applications to Make Special and for Accelerated Examination" published in the Federal Register on June 26, 2006 (71 Fed. Reg. 36323), must satisfy the following conditions:

I. Conditions Regarding the Application:

1. the application must be a non-reissue utility or design application filed under 37 CFR 1.111(a);
2. the application, the petition and the required fees must be filed electronically using the USPTO's electronic filing system (EFS), or EFS-web; if not filed electronically, a statement asserting that EFS and EFS-web were not available during the normal business hours.
3. at the time of filing, the application must be complete under 37 CFR 1.51 and in condition for examination;
4. the application must contain three or fewer independent claims and twenty or fewer total claims and the claims must be directed to a single invention.

II. Conditions Regarding the Petition:

The petition must:

1. be filed with the application;

2. include a statement that applicant agrees not to separately argue the patentability of any independent claim during any appeal in the application;

3. include a statement that applicant agrees to make an election without traverse in a telephone interview.

4. include a statement that applicant agrees to conduct such an interview when requested by the examiner.

5. include a statement, made based on a good faith belief, that a preexamination search in compliance with the following requirements, was conducted, including an identification of the filed of search by United States class and subclass, where applicable, and for database searches, the search logic or chemical structure or sequence used as a query, the name of the file(s) searched and the database service, and the date of the search.

The preexamination search must:

5.1 involve U.S. patents and patent application publications, foreign patent documents, and non-patent literature, unless the applicant can justify with reasonable certainty that no references more pertinent than those already identified are likely to be found in the eliminated sources and includes such a justification with this statement;

5.2. be directed to the claimed invention and encompass all of the features of the claims, giving the claims the broadest reasonable interpretation;

5.3. encompass the disclosed features that may be claimed.

6. must provide in support of the petition an accelerated examination support document. An accelerated examination support document must include:

6.1. an information disclosure statement (IDS) in compliance with 37 CFR 1.98 citing each reference deemed most closely related to the subject matter of each of the claims;

6.2. an identification of all the limitations in the claims that are disclosed by the reference specifying where the limitation is disclosed in the cited reference;

6.3. a detailed explanation of how each of the claims are patentable over the references cited with particularity required by 37 CFR 1.111(b) and (c);

6.4. a concise statement of the utility of the invention as defined in each of the independent claims (unless the application is a design application);

6.5. a showing of where each limitation of the claims finds support under 35 USC 112, first paragraph, in the written description of the specification. If applicable, the showing must also identify: (1) each means- (or step) plus-function claim element that invokes consideration under 35 USC 112, sixth paragraph; and (2) the structure, material, or acts in the specification that corresponds to each means- (or step) plus-function claim element that invokes consideration under 35 USC 112, sixth paragraph; if the application claims the benefit of one or more applications under title 35, United States Code, the showing must also include where each limitation of the claims finds support under 35 USC 112, first paragraph, in each such application in which such supports exists;

6.6. an identification of any cited references that may be disqualified under 35 USC 103(c).

REVIEW OF FACTS

The conditions set forth under section I. above are considered to have been met. However, the petition fails to comply with conditions set forth under section II. item 6.5.

For these reasons cited above, the petition fails to meet the required conditions to be accorded special status under the accelerated examination procedure.

Regarding the requirement in item 6.5 above, the Accelerated Examination Support Document is deficient because it fails to provide a showing where each limitation of the claims finds support under 35 USC 112, first paragraph in the disclosure of benefit applications 12/646,868 and 61/140,810.

DECISION

For the above-stated reasons, the petition is **dismissed**. The application will therefore be taken up by the examiner for action in its regular turn.

Petitioner is given a single opportunity to perfect the petition. Any request for reconsideration of this decision must be submitted within 1 (one) month or 30 (thirty) days, whichever is longer, (no extension of time under 37 CFR 1.136(a)) from the date of this decision in order to be considered timely. Any request for reconsideration must address the deficiencies indicated above.

Petitioner is reminded that, upon granting of the special status of the application on request for reconsideration, the application will be processed expeditiously. However, due to the dismissal of the instant petition, examination may not be completed within twelve months of the filing date of the application.

Any inquiry regarding this decision should be directed to Ken Wieder, Quality Assurance Specialist, at (571) 272-2986.

Kenneth A. Wieder
Quality Assurance Specialist
Technology Center 2600
Communications

UNITED STATES PATENT AND TRADEMARK OFFICE

Commissioner for Patents
United States Patent and Trademark Office
P.O. Box 1450
Alexandria, VA 22313-1450
www.uspto.gov

MAIL

JUN 22 2010

DIRECTOR'S OFFICE
TECHNOLOGY CENTER 2600

Stolowitz Ford Cowger LLP
621 SW Morrison St
Suite 600
Portland OR 97205

In re Application of:
MARTIN, FRANCISCO
Serial No.: 12/763,420
Filed: April 20, 2010

Title: **SPORTING EVENT IMAGE CAPTURE, PROCESSING AND PUBLICATION**

DECISION ON PETITION TO MAKE SPECIAL FOR NEW APPLICATION UNDER 37 C.F.R. § 1.102 & M.P.E.P. § 708.02

The request for reconsideration on petition to make the application special filed June 11, 2010 is **GRANTED**.

The application is eligible for accelerated examination and the petition complies with the conditions for granting the application special status pursuant to the "Change to Practice for Petitions in Patent Applications to Make Special and for Accelerated Examination" published June 26, 2006, in the Federal Register. (71 Fed. Reg. 36323).

The prosecution of the instant application will be conducted expeditiously according to the following guidelines.

1. The application will be docketed to an examiner and taken up for action within two weeks of the date of this decision.

2. Restriction Practice:
   If the examiner determines that the claims are not directed to a single invention, a telephone request to elect one single invention will be made pursuant to MPEP 812.01. As a prerequisite to the grant of this petition, the applicant has agreed to make an oral election, by telephone, without traverse. If the applicant refuses to make an election without traverse, or the examiner cannot reach the applicant after a reasonable effort, the examiner will treat the first claimed invention (invention defined by claim 1) as having being constructively elected without traverse for examination.

3. Office action:
   If it is determined that, after appropriate consultation, there is a potential rejection or any other issue to be addressed, the examiner will telephone the applicant and arrange an interview to discuss and resolve the issue. An Office action, other than a Notice of Allowance and Fee(s) Due (Notice of Allowance), will not be issued unless either: 1) an interview was conducted but did not result in agreed to action that places the application in condition for allowance, or, 2) a determination is made that an interview would be unlikely to result in the application being placed in condition for allowance, and 3) an internal conference has been held to review any rejection of any claim.

4. Time for Reply:
   An Office action other than a Notice of Allowance or a final Office action will set a shortened statutory period of one month or thirty days, whichever is longer, for reply with no extension of time available under 37 CFR 1.136(a). Failure to timely file a reply within this non-extendible period for reply will result in the abandonment of the application.

5. Reply by Applicant:
   A timely reply to an Office action other than the Notice of Allowance must be submitted electronically via EFS or EFS-web and limited to addressing the rejections, objections and requirement made. Any amendment that attempts to: 1) add claims which would result in more than three pending independent claims or more than twenty pending total claims; 2) present claims not encompassed by the pre-examination search or an updated accelerated examination support document; or 3) present claims that are directed a non-elected invention or an invention other than that previously claimed and examined in the application, will be treated as not fully responsive and will not be entered.

   For any amendment to the claims (including any new claim) that is not encompassed by the accelerated examination support document, applicant must provide an updated accelerated examination support document that encompasses the amended or new claims at the time of filing of the amendment.

   To proceed expeditiously with the examination, it is recommended that a reply with amendments made to any claim or with any new claim being added be accompanied by an updated accelerated examination support document or a statement explaining how the amended or new claim is supported by the original accelerated examination support document.

6. Information Disclosure Statement (IDS):
   Any IDS filed during prosecution must be submitted electronically via EFS or EFS-web, accompanied by an updated accelerated examination support document, and be in compliance with 37 CFR 1.97 and 1.98.

7. Post-Allowance Processing:
   To expedite processing of the allowed application into a patent, the applicant must: 1) pay the required fees within one month of the date of the Notice of Allowance, and 2) not

file any post allowance papers not required by the Office. In no event may the issue fee be paid and accepted later than three months from the date of the Notice of Allowance.

8. After-Final and Appeal Procedures:
   To expedite prosecution, after receiving the final Office action, applicant must: 1) promptly file a notice of appeal, an appeal brief and appeal fees; and 2) not request a pre-appeal brief conference.

   Any amendment, affidavit or other evidence filed after final Office action must comply with applicable rules and the requirements outlined in numbered paragraphs 5 and 6 above.

   On appeal, the application will proceed according to normal appeal procedures. After appeal, the application will again be treated special.

9. Proceedings Outside the Normal Examination Process:
   If the application becomes involved in a proceeding that is outside the normal examination process (e.g., a secrecy order, national security review, interference proceeding, petitions under 37 CFR 1.181, 182 or 183), the application will be treated special before and after such proceeding.

10. Final Disposition:
    The twelve month goal of this accelerated examination procedure ends with a final disposition. The mailing of a final Office action, a Notice of Allowance, the filing of a Notice of Appeal, or the filing of a Request for Continued Examination (RCE) is the final disposition.

If, during prosecution, a paper is not filed electronically using EFS-web, a reply is filed but is not fully responsive, the application is involved in an appeal, or a proceeding outside normal examination process, the application will still be examined expeditiously, however, the final disposition may occur more than twelve months from the filing of the application.

Any inquiry regarding this decision should be directed to Ken Wieder, Quality Assurance Specialist, at (571) 272-2986.

Kenneth A. Wieder
Quality Assurance Specialist
Technology Center 2600
Communications

UNITED STATES PATENT AND TRADEMARK OFFICE

UNITED STATES DEPARTMENT OF COMMERCE
United States Patent and Trademark Office
Address: COMMISSIONER FOR PATENTS
P.O. Box 1450
Alexandria, Virginia 22313-1450
www.uspto.gov

APPLICATION NO.	FILING DATE	FIRST NAMED INVENTOR	ATTORNEY DOCKET NO.	CONFIRMATION NO.
12/764,071	04/20/2010	Nicholas ROUTHIER	P1013US03	6673

39500 7590 05/19/2010
Anglehart et al.
Suite 258
393 St-Jacques
Montreal, QC H2Y 1N9
CANADA

EXAMINER	
ART UNIT	PAPER NUMBER
2621	

NOTIFICATION DATE	DELIVERY MODE
05/19/2010	ELECTRONIC

Please find below and/or attached an Office communication concerning this application or proceeding.

The time period for reply, if any, is set in the attached communication.

Notice of the Office communication was sent electronically on above-indicated "Notification Date" to the following e-mail address(es):

james.anglehart@anglehart.et-al.ca
martine@anglehart.et-al.ca

UNITED STATES PATENT AND TRADEMARK OFFICE

Commissioner for Patents
United States Patent and Trademark Office
P.O. Box 1450
Alexandria, VA 22313-1450
www.uspto.gov

Anglehart et al.
Suite 258
393 St-Jacques
Montreal QC H2Y 1N9 CA CANADA

In re Application of: ROUTHIER, NICHOLAS et al. Serial No.: 12/764,071 Filed: April 20, 2010 Title: **PROCESS AND SYSTEM FOR ENCODING AND PLAYBACK OF STEREOSCOPIC VIDEO SEQUENCES**	DECISION ON PETITION TO MAKE SPECIAL FOR NEW APPLICATION UNDER 37 C.F.R. § 1.102 & M.P.E.P. § 708.02

This is a decision on the petition filed on April 20, 2010 to make the above-identified application special for accelerated examination procedure under 37 C.F.R. § 1.102(d).

The petition to make the application special is **DISMISSED**.

REGULATION AND PRACTICE

A grantable petition to make special under 37 C.F.R. § 1.102(d) and pursuant to the "Change to Practice for Petitions in Patent Applications to Make Special and for Accelerated Examination" published in the Federal Register on June 26, 2006 (71 Fed. Reg. 36323), must satisfy the following conditions:

I. Conditions Regarding the Application:

1. the application must be a non-reissue utility or design application filed under 37 CFR 1.111(a);
2. the application, the petition and the required fees must be filed electronically using the USPTO's electronic filing system (EFS), or EFS-web; if not filed electronically, a statement asserting that EFS and EFS-web were not available during the normal business hours.
3. at the time of filing, the application must be complete under 37 CFR 1.51 and in condition for examination;
4. the application must contain three or fewer independent claims and twenty or fewer total claims and the claims must be directed to a single invention.

II. Conditions Regarding the Petition:

The petition must:

1. be filed with the application;

2. include a statement that applicant agrees not to separately argue the patentability of any independent claim during any appeal in the application;

3. include a statement that applicant agrees to make an election without traverse in a telephone interview.

4. include a statement that applicant agrees to conduct such an interview when requested by the examiner.

5. include a statement, made based on a good faith belief, that a preexamination search in compliance with the following requirements, was conducted, including an identification of the filed of search by United States class and subclass, where applicable, and for database searches, the search logic or chemical structure or sequence used as a query, the name of the file(s) searched and the database service, and the date of the search.

The preexamination search must:

5.1 involve U.S. patents and patent application publications, foreign patent documents, and non-patent literature, unless the applicant can justify with reasonable certainty that no references more pertinent than those already identified are likely to be found in the eliminated sources and includes such a justification with this statement;

5.2. be directed to the claimed invention and encompass all of the features of the claims, giving the claims the broadest reasonable interpretation;

5.3. encompass the disclosed features that may be claimed.

6. must provide in support of the petition an accelerated examination support document. An accelerated examination support document must include:

6.1. an information disclosure statement (IDS) in compliance with 37 CFR 1.98 citing each reference deemed most closely related to the subject matter of each of the claims;

6.2. an identification of all the limitations in the claims that are disclosed by the reference specifying where the limitation is disclosed in the cited reference;

6.3. a detailed explanation of how each of the claims are patentable over the references cited with particularity required by 37 CFR 1.111(b) and (c);

6.4. a concise statement of the utility of the invention as defined in each of the independent claims (unless the application is a design application);

6.5. a showing of where each limitation of the claims finds support under 35 USC 112, first paragraph, in the written description of the specification. If applicable, the showing must also identify: (1) each means- (or step) plus-function claim element that invokes consideration under 35 USC 112, sixth paragraph; and (2) the structure, material, or acts in the specification that corresponds to each means- (or step) plus-function claim element that invokes consideration under 35 USC 112, sixth paragraph; if the application claims the benefit of one or more applications under title 35, United States Code, the showing must also include where each limitation of the claims finds support under 35 USC 112, first paragraph, in each such application in which such supports exists;

6.6. an identification of any cited references that may be disqualified under 35 USC 103(c).

REVIEW OF FACTS

The conditions set forth under section I. above are considered to have been met. However, the petition fails to comply with conditions set forth under section II Items 5 – 5.3, 6.2 and 6.5.

For these reasons cited above, the petition fails to meet the required conditions to be accorded special status under the accelerated examination procedure.

Regarding the requirement in item 5 - 5.3 above, the preexamination search document provided with the instant petition is deficient as follows: The search submitted by applicant is too narrow. A complete search should also include:

A search in Class/subclass: 348/44-50

If any request for reconsideration is filed, an updated preexamination search must be conducted as per item 5.1 above, and the Preexamination Search Document must be amended to indicate such; a new Information Disclosure Statement should be filed to cite any newly found prior art, and the Accelerated Examination Support Document must also be amended to include the necessary reference and discussion of any newly found and cited prior art in accordance with all of items 6 through 6.6 above.

Regarding the requirement in item 6.2 above, the Accelerated Examination Support Document is deficient because the section titled "Identification of Limitations Disclosed by References" provides only a broad general description of each reference cited. Petition identifies the limitations in the claims (by underlining the claimed limitations) of the application that are disclosed by each reference cited, but fails to specifying where each limitation is disclosed by each cited reference as required by item 6.2. Clarification is required.

Regarding the requirement in item 6.5 above, the "Accelerated Examination Support Document", is deficient because the section titled "Showing of Support under 35 USC 112, First Paragraph" fails to include a showing of where ***each limitation of each of the claims*** finds support under the first paragraph of 35 USC 112 in the written description of the instant specification and each benefit application. As set forth supra, "*if the application claims the benefit of one or more applications under title 35, United States Code, the showing must also include where each limitation of the claims finds support under 35 USC 112, first paragraph,* ***in each such application in which such supports exists***". For the instant application, Petitioner provides a broad general description and fails to show where each claim limitation finds support in the written description of the specification for the claims. For the benefit application, it is noted that the instant application also claims benefit to Canada 2,380,105 filed 4/9/2002. Petitioner has not provided a showing of support for this benefit application. Therefore, an updated accelerated examination support document must be provided which shows where each limitation of the claims finds support in the instant application and also in Canada 2,380,105 application as well. Clarification is required.

DECISION

For the above-stated reasons, the petition is **dismissed**. The application will therefore be taken up by the examiner for action in its regular turn.

Petitioner is given a single opportunity to perfect the petition. Any request for reconsideration of this decision must be submitted within 1 (one) month or 30 (thirty) days, whichever is longer, (no extension of time under 37 CFR 1.136(a)) from the date of this decision in order to be considered timely. Any request for reconsideration must address the deficiencies indicated above.

Petitioner is reminded that, upon granting of the special status of the application on request for reconsideration, the application will be processed expeditiously. However, due to the dismissal of the instant petition, examination may not be completed within twelve months of the filing date of the application.

Any inquiry regarding this decision should be directed to Doris To, Quality Assurance Specialist, at (571) 272-7629.

/Doris To/

Doris To
Quality Assurance Specialist
Technology Center 2600
Communications

0.24

UNITED STATES PATENT AND TRADEMARK OFFICE

UNITED STATES DEPARTMENT OF COMMERCE
United States Patent and Trademark Office
Address: COMMISSIONER FOR PATENTS
P.O. Box 1450
Alexandria, Virginia 22313-1450
www.uspto.gov

APPLICATION NO.	FILING DATE	FIRST NAMED INVENTOR	ATTORNEY DOCKET NO.	CONFIRMATION NO.
12/764,071	04/20/2010	Nicholas ROUTHIER	P1013US03	6673

39500 7590 06/09/2010
Anglehart et al.
Suite 258
393 St-Jacques
Montreal, QC H2Y 1N9
CANADA

EXAMINER

ART UNIT	PAPER NUMBER
2621	

NOTIFICATION DATE	DELIVERY MODE
06/09/2010	ELECTRONIC

Please find below and/or attached an Office communication concerning this application or proceeding.

The time period for reply, if any, is set in the attached communication.

Notice of the Office communication was sent electronically on above-indicated "Notification Date" to the following e-mail address(es):

james.anglehart@anglehart.et-al.ca
martine@anglehart.et-al.ca

United States Patent and Trademark Office

~~Commissioner for Patents~~
United States Patent and Trademark Office
P.O. Box 1450
Alexandria, VA 22313-1450
www.uspto.gov

Anglehart et al.
Suite 258
393 St-Jacques
Montreal QC H2Y 1N9 CA CANADA

In re Application of: ROUTHIER, NICHOLAS, et al. Serial No.: 12/764,071 Filed: April 20, 2010 Attorney Docket No: **P1013US03** Title: **PROCESS AND SYSTEM FOR ENCODING AND PLAYBACK OF STEREOSCOPIC VIDEO SEQUENCES**	DECISION ON PETITION TO MAKE SPECIAL FOR NEW APPLICATION UNDER 37 C.F.R. § 1.102 & M.P.E.P. § 708.02

This is a decision on the petition filed on June 8, 2010 requesting reconsideration to make the above-identified application special for accelerated examination procedure under 37 C.F.R. § 1.102(d).

All of the requirements to correct the deficiencies outlined in the petition decision mailed May 19, 2010 have been met.

The petition to make the application special is **GRANTED**.

The application is eligible for accelerated examination and the petition complies with the conditions for granting the application special status pursuant to the "Change to Practice for Petitions in Patent Applications to Make Special and for Accelerated Examination" published June 26, 2006, in the Federal Register. (71 Fed. Reg. 36323).

The prosecution of the instant application will be conducted expeditiously according to the following guidelines.

1. The application will be docketed to an examiner and taken up for action within two weeks of the date of this decision.

2. Restriction Practice:
   If the examiner determines that the claims are not directed to a single invention, a telephone request to elect one single invention will be made pursuant to MPEP 812.01. As a prerequisite to the grant of this petition, the applicant has agreed to make an oral election, by telephone, without traverse. If the applicant refuses to make an election

without traverse, or the examiner cannot reach the applicant after a reasonable effort, the examiner will treat the first claimed invention (invention defined by claim 1) as having being constructively elected without traverse for examination.

3. Office action:
If it is determined that, after appropriate consultation, there is a potential rejection or any other issue to be addressed, the examiner will telephone the applicant and arrange an interview to discuss and resolve the issue. An Office action, other than a Notice of Allowance and Fee(s) Due (Notice of Allowance), will not be issued unless either: 1) an interview was conducted but did not result in agreed to action that places the application in condition for allowance, or, 2) a determination is made that an interview would be unlikely to result in the application being placed in condition for allowance, and 3) an internal conference has been held to review any rejection of any claim.

4. Time for Reply:
An Office action other than a Notice of Allowance or a final Office action will set a shortened statutory period of one month or thirty days, whichever is longer, for reply with no extension of time available under 37 CFR 1.136(a). Failure to timely file a reply within this non-extendible period for reply will result in the abandonment of the application.

5. Reply by Applicant:
A timely reply to an Office action other than the Notice of Allowance must be submitted electronically via EFS or EFS-web and limited to addressing the rejections, objections and requirement made. Any amendment that attempts to: 1) add claims which would result in more than three pending independent claims or more than twenty pending total claims; 2) present claims not encompassed by the pre-examination search or an updated accelerated examination support document; or 3) present claims that are directed a non-elected invention or an invention other than that previously claimed and examined in the application, will be treated as not fully responsive and will not be entered.

   For any amendment to the claims (including any new claim) that is not encompassed by the accelerated examination support document, applicant must provide an updated accelerated examination support document that encompasses the amended or new claims at the time of filing of the amendment.

   To proceed expeditiously with the examination, it is recommended that a reply with amendments made to any claim or with any new claim being added be accompanied by an updated accelerated examination support document or a statement explaining how the amended or new claim is supported by the original accelerated examination support document.

6. Information Disclosure Statement (IDS):
Any IDS filed during prosecution must be submitted electronically via EFS or EFS-web, accompanied by an updated accelerated examination support document, and be in compliance with 37 CFR 1.97 and 1.98.

7. Post-Allowance Processing:

To expedite processing of the allowed application into a patent, the applicant must: 1) pay the required fees within one month of the date of the Notice of Allowance, and 2) not file any post allowance papers not required by the Office. In no event may the issue fee be paid and accepted later than three months from the date of the Notice of Allowance.

8. After-Final and Appeal Procedures:
   To expedite prosecution, after receiving the final Office action, applicant must: 1) promptly file a notice of appeal, an appeal brief and appeal fees; and 2) not request a pre-appeal brief conference.

   Any amendment, affidavit or other evidence filed after final Office action must comply with applicable rules and the requirements outlined in numbered paragraphs 5 and 6 above.

   On appeal, the application will proceed according to normal appeal procedures. After appeal, the application will again be treated special.

9. Proceedings Outside the Normal Examination Process:
   If the application becomes involved in a proceeding that is outside the normal examination process (e.g., a secrecy order, national security review, interference proceeding, petitions under 37 CFR 1.181, 182 or 183), the application will be treated special before and after such proceeding.

10. Final Disposition:
    The twelve month goal of this accelerated examination procedure ends with a final disposition. The mailing of a final Office action, a Notice of Allowance, the filing of a Notice of Appeal, or the filing of a Request for Continued Examination (RCE) is the final disposition.

If, during prosecution, a paper is not filed electronically using EFS-web, a reply is filed but is not fully responsive, the application is involved in an appeal or a proceeding outside normal examination process, the application will still be examined expeditiously, however, the final disposition may occur more than twelve months from the filing of the application.

Any inquiry regarding this decision should be directed to Doris To, Quality Assurance Specialist, at (571) 272-7629.

/Doris To/

Doris To
Quality Assurance Specialist
Technology Center 2600
Communications

02

UNITED STATES PATENT AND TRADEMARK OFFICE

UNITED STATES DEPARTMENT OF COMMERCE
United States Patent and Trademark Office
Address: COMMISSIONER FOR PATENTS
P.O. Box 1450
Alexandria, Virginia 22313-1450
www.uspto.gov

APPLICATION NO.	FILING DATE	FIRST NAMED INVENTOR	ATTORNEY DOCKET NO.	CONFIRMATION NO.
12/770,240	04/29/2010	Cheman Shaik	Shaik - 5	9327

27550 7590 05/18/2010
WALTER J. TENCZA JR.
100 Menlo Park
Suite 210
Edison, NJ 08837

EXAMINER

ART UNIT	PAPER NUMBER
2447	

MAIL DATE	DELIVERY MODE
05/18/2010	PAPER

Please find below and/or attached an Office communication concerning this application or proceeding.

The time period for reply, if any, is set in the attached communication.

UNITED STATES PATENT AND TRADEMARK OFFICE

Commissioner for Patents
United States Patent and Trademark Office
P.O. Box 1450
Alexandria, VA 22313-1450
okwww.uspto.gov

MAILED

MAY 18 2010

DIRECTOR OFFICE
TECHNOLOGY CENTER 2400

WALTER J. TENCZA JR.
100 Menlo Park
Suite 210
Edison NJ 08837

In re Application of: SHAIK, Cheman
Serial No.: **12/770,240**
Filed: April 29, 2010
Atty Docket No: Shaik - 5
Title: CODELESS DYNAMIC WEBSITES INCLUDING GENERAL FACILITIES

DECISION ON PETITION TO MAKE SPECIAL FOR NEW APPLICATION UNDER 37 C.F.R. § 1.102 & M.P.E.P. § 708.02

This is a decision on the petition filed on April 29, 2010 to make the above-identified application special for accelerated examination procedure under 37 C.F.R. § 1.102(d).

The petition to make the application special is **GRANTED.**

The application is eligible for accelerated examination and the renewed petition complies with the conditions for granting the application special status pursuant to the "Change to Practice for Petitions in Patent Applications to Make Special and for Accelerated Examination" published June 26, 2006, in the Federal Register. (71 Fed. Reg. 36323).

The prosecution of the instant application will be conducted expeditiously according to the following guidelines.

1. The application will be docketed to an examiner and taken up for action within two weeks of the date of this decision.

2. Restriction Practice:
If the examiner determines that the claims are not directed to a single invention, a telephone request to elect one single invention will be made pursuant to MPEP 812.01. As a prerequisite to the grant of this petition, the applicant has agreed to make an oral election, by telephone, without traverse. If the applicant refuses to make an election without traverse, or the examiner cannot reach the applicant after a reasonable effort, the examiner will treat the first claimed invention (invention defined by claim 1) as having being constructively elected without traverse for examination.

3. Office action:

If it is determined that, after appropriate consultation, there is a potential rejection or any other issue to be addressed, the examiner will telephone the applicant and arrange an interview to discuss and resolve the issue. An Office action, other than a Notice of Allowance and Fee(s) Due (Notice of Allowance), will not be issued unless either: 1) an interview was conducted but did not result in agreed to action that places the application in condition for allowance, or, 2) a determination is made that an interview would be unlikely to result in the application being placed in condition for allowance, and 3) an internal conference has been held to review any rejection of any claim.

4. Time for Reply:
An Office action other than a Notice of Allowance or a final Office action will set a shortened statutory period of one month or thirty days, whichever is longer, for reply with no extension of time available under 37 CFR 1.136(a). Failure to timely file a reply within this non-extendible period for reply will result in the abandonment of the application.

5. Reply by Applicant:
A timely reply to an Office action other than the Notice of Allowance must be submitted electronically via EFS or EFS-web and limited to addressing the rejections, objections and requirement made. Any amendment that attempts to: 1) add claims which would result in more than three pending independent claims or more than twenty pending total claims; 2) present claims not encompassed by the pre-examination search or an updated accelerated examination support document; or 3) present claims that are directed a non-elected invention or an invention other than that previously claimed and examined in the application, will be treated as not fully responsive and will not be entered.

For any amendment to the claims (including any new claim) that is not encompassed by the accelerated examination support document, applicant must provide an updated accelerated examination support document that encompasses the amended or new claims at the time of filing of the amendment.

To proceed expeditiously with the examination, it is recommended that a reply with amendments made to any claim or with any new claim being added be accompanied by an updated accelerated examination support document or a statement explaining how the amended or new claim is supported by the original accelerated examination support document.

6. Information Disclosure Statement (IDS):
Any IDS filed during prosecution must be submitted electronically via EFS or EFS-web, accompanied by an updated accelerated examination support document, and be in compliance with 37 CFR 1.97 and 1.98.

7. Post-Allowance Processing:
To expedite processing of the allowed application into a patent, the applicant must: 1) pay the required fees within one month of the date of the Notice of Allowance, and 2) not file any post allowance papers not required by the Office. In no event

may the issue fee be paid and accepted later than three months from the date of the Notice of Allowance.

8. After-Final and Appeal Procedures:
To expedite prosecution, after receiving the final Office action, applicant must: 1) promptly file a notice of appeal, an appeal brief and appeal fees; and 2) not request a pre-appeal brief conference. Any amendment, affidavit or other evidence filed after final Office action must comply with applicable rules and the requirements outlined in numbered paragraphs 5 and 6 above. On appeal, the application will proceed according to normal appeal procedures. After appeal, the application will again be treated special.

9. Proceedings Outside the Normal Examination Process:
If the application becomes involved in a proceeding that is outside the normal examination process (e.g., a secrecy order, national security review, interference proceeding, petitions under 37 CFR 1.181, 182 or 183), the application will be treated special before and after such proceeding.

10. Final Disposition:
The twelve month goal of this accelerated examination procedure ends with a final disposition. The mailing of a final Office action, a Notice of Allowance, the filing of a Notice of Appeal, or the filing of a Request for Continued Examination (RCE) is the final disposition. If, during prosecution, a paper is not filed electronically using EFS-web, a reply is filed but is not fully responsive, the application is involved in an appeal, or a proceeding outside normal examination process, the application will still be examined expeditiously, however, the final disposition may occur more than twelve months from the filing of the application.

Any inquiry regarding this decision should be directed to Beatriz Prieto, Quality Assurance Specialist, at (571) 272-3902. A second point of Contact is Kim Huynh at (571)-272-4147.

/Beatriz Prieto/

Beatriz Prieto, Quality Assurance Specialist
Technology Center 2400
Networking, Multiplexing, Cable and Security

UNITED STATES PATENT AND TRADEMARK OFFICE

Commissioner for Patents
United States Patent and Trademark Office
P.O. Box 1450
Alexandria, VA 22313-1450
www.uspto.gov

MERCHANT AND GOULD PC
P.O. BOX 2903
MINNEAPOLIS, MN 55402-0903

COPY MAILED

JUN 05 2007

OFFICE OF PETITIONS

In re Application of	:	
Victor Fuk-Pong Man, et al	:	
Application No. 11/029,235	:	DECISION ON PETITION
Filed: January 4, 2005	:	TO WITHDRAW
Attorney Docket No. 163.1878USI1	:	FROM RECORD

This is a decision on the Request to Withdraw as attorney or agent of record under 37 C.F.R. § 1.36(b), filed January 22, 2007.

The request is **APPROVED**.

A grantable request to withdraw as attorney/agent of record must be signed by every attorney/agent seeking to withdraw or contain a clear indication that one attorney is signing on behalf of another/others. A request to withdraw will not be approved unless at least 30 (thirty) days would remain between the date of approval and the later of the expiration date of a time to file a response or the expiration date of the maximum time period which can be extended under 37 C.F.R. § 1.136(a).

Sarah M. Monfeldt has been withdrawn as attorney of record; all other attorneys remain of record.

The correspondence address of record remains unchanged.

There are no pending Office actions at the present time.

Telephone inquiries concerning this decision should be directed to Diane Goodwyn at 571-272-6735.

April Wise
Petitions Examiner
Office of Petitions

UNITED STATES PATENT AND TRADEMARK OFFICE

COMMISSIONER FOR PATENTS
UNITED STATES PATENT AND TRADEMARK OFFICE
P.O. BOX 1450
ALEXANDRIA, VA 22313-1450
www.uspto.gov

DEC 11 2003

KENNETH S. WEITZMAN
MORGAN & FINNEGAN
345 PARK AVENUE
NEW YORK, NY 10154

#59

In re Application of:	:
Christiane Pandel	:
Serial No.: 29/054,674	: PETITION DECISION
Filed: May 20, 1996	:
Attorney Docket No.: 7788-4003US3	:

This is in response to applicant's Petition under 37 CFR 1.181, filed October 29, 2003, based on having not received the Office action.

This petition is **GRANTED.**

This application was held abandoned based on applicant's failure to timely respond to the Final rejection mailed October 22, 2002. As no response was received by January 22, 2003, the Office mailed a Notice of Abandonment on November 4, 2003.

Applicant has stated that a response was not filed, as the Office action was never received. A copy of applicant's docket records and the filing of a status letter were submitted to substantiate the claim. Therefore, the Notice of Abandonment is hereby rescinded.

The application will be forwarded to the examiner for prompt remailing of the Office action.

Should there be any questions with regard to this letter please contact Sandra Morris; by letter addressed to the Director, Technology Center 3700/2900, PO Box 1450, Alexandria VA 22313-1450; or by telephone at (703) 305-3102 or by facsimile transmission at (703) 305-5679.

John E. Kittle

John Kittle
Director, Technology Center 3700/2900

UNITED STATES PATENT AND TRADEMARK OFFICE

Commissioner for Patents
United States Patent and Trademark Office
P.O. Box 1450
Alexandria, VA 22313-1450
www.uspto.gov

BROUSE MCDOWELL LPA
388 SOUTH MAIN STREET
SUITE 500
AKRON OH 44311

Paper No. 10

COPY MAILED

DEC 15 2009

OFFICE OF PETITIONS

In re Application of
John Blazy
Application No. 29/059,760
Filed: September 16, 1996
Attorney Docket No. 30063.0003

DECISION ON PETITION
TO WITHDRAW
FROM RECORD

This is a decision on the Request to Withdraw as attorney or agent of record under 37 CFR § 1.36(b), filed October 9, 2009.

The request is **NOT APPROVED**.

A review of the file record indicates that John M. Skeriotis or any attorneys/agents associated with Customer Number 26781 does not have power of attorney or was ever given power of attorney in this patent application. Accordingly, the request to withdraw under 37 CFR § 1.36(b) is not applicable.

All future communications from the Office will continue to be directed to the address of record until otherwise properly notified by the applicant.

Telephone inquires concerning this decision should be directed to JoAnne Burke at 571-272-4584.

JoAnne Burke
Petitions Examiner
Office of Petitions

UNITED STATES PATENT AND TRADEMARK OFFICE

COMMISSIONER FOR PATENTS
UNITED STATES PATENT AND TRADEMARK OFFICE
P.O. BOX 1450
ALEXANDRIA, VA 22313-1450
www.uspto.gov

3M INNOVATIVE PROPERTIES
COMPANY
PO BOX 33427
ST. PAUL, MN 55133-3427

COPY MAILED
JUN 08 2006
OFFICE OF PETITIONS

In re Application of	:	
Curran et al.	:	
Application No. 29/062,787	:	
Filed: November 25, 1996	:	ON PETITION
Title of Invention: PERSONAL	:	
RESPIRATORY PROTECTION DEVICE	:	

This is a decision on the Petition to Director Under 37 CFR 1.181, filed April 8, 2005, requesting withdrawal of the holding of abandonment. The petition is properly treated under 37 CFR 1.181.

The petition is **granted.**

The above-identified application became abandoned for failure to timely and properly reply to the Notice of Allowance and issue Fee Due ("Notice"), mailed July 8, 1998. The Notice set a non-extendable three (3) month period for reply. No reply having been received, the application became abandoned on October 9, 1998. A Notice of Abandonment was mailed November 21, 2001.

Applicant's Assertion

Applicant asserts that a timely reply to the Notice was filed on October 8, 1998, in the form of a Continued Prosecution Application ("CPA"). In support of this assertion, Applicant provides copies of, *inter alia*, a return-receipt postcard, acknowledging receipt by this office of a CPA request Transmittal Letter and an Information Disclosure Statement ("IDS") on October 8, 1998; a copy of the CPA Transmittal Form which includes Express Mail Mailing Label No. EL134959205US, a copy of an Express Mail Mailing Label No. EL134959205US, which includes a "Date-In" of October 8, 1998; a copy of an Amendment which includes a Certificate of facsimile date October 18, 1998.

A review of the application file reveals that it includes a CPA Request Transmittal Form (Paper #13), with an indication thereon that the CPA fee of $330.00 was charged to deposit account 13-3723 (Office records confirm that the CPA filing fee was charged to Applicant).

In view of the foregoing, the holding of abandonment is hereby withdrawn.

No fee has been charged and none is due.

The application file is being referred to Technology Center Art Unit 2914 for continued examination in due course[1].

Telephone inquiries concerning this decision should be directed to the undersigned at 571-272-3232.

Derek L. Woods
Attorney
Office of Petitions

[1] Office records also indicate receipt of an IDS on October 18, 1998, and Supplemental IDS's on May 10, 1999 and March 30, 2001.

UNITED STATES PATENT AND TRADEMARK OFFICE

Commissioner for Patents
United States Patent and Trademark Office
P.O. Box 1450
Alexandria, VA 22313-1450
www.uspto.gov

December 31, 2007

Patent No. :D403,685
Inventor(s) :Shigeo Kobayashi
Issued :January 5, 1999
Title :WIRE SAW HOUSING
Doc./File No.:ONDAT-044US

Re: Request for Certificate of Correction

Consideration has been given your request for the issuance of a certificate of correction for the above identified patent.

Applicant's request to change the filing date from what appears on the printed patent is not warranted entry as filed per applicants' request. The information as provided by applicant failed to include proper documentation in support of applicants claim. Accordingly, in this matter, the patent as printed is considered in accordance with the records of the Patent and Trademark Office.

Further documentation to support applicants' claim should include a copy of applicants filing receipt and any other documentation that would justify a filing date of December 27, 1996.

In view of the forgoing applicants' request in this matter is hereby denied. Further correspondence concerning this matter should be directed to the certificate of correction Branch. Any Telephone inquiry concerning this communication should be directed to Ms. A. Green at (703) 308-9380 ext. 123.

Mary Diggs, Supervisor
Decisions & Certificates
of Correction Branch
(703) 308-9390 or (703) 308- 9380 ext. 123

Stetina, Brunda, Garred & Brucker
241221 Calle De La Louisa, Ste 400
Laguna Hills, CA 92653

CBN/arg

UNITED STATES DEPARTMENT OF COMMERCE
Patent and Trademark Office
ASSISTANT SECRETARY AND COMMISSIONER
OF PATENTS AND TRADEMARKS
Washington, D.C. 20231

JAMES W. CARSON
133 RICHMOND STREET WEST
TORONTO, ONTARIO CANADA
M5H 2L7

JUL 25 2000

In re Application of	:
Richard Boroviak	:
Serial No.: 29/067,042	: WITHDRAWAL OF ABANDONMENT
Filed: February 27, 1997	:
Attorney Docket No.: JWC-9670/US	:

This is in response to applicants' Petition for Withdrawal of Abandonment, which is being treated as a petition under 37 CFR 1.181, filed July 22, 1999, which was faxed again on November 17, 1999, based on having never having received the first Office action. The delay in responding to this petition is regretted.

A review of the file history shows that the Office mailed the first Office action to applicant on October 14, 1998, setting a three-month shortened statutory period for response. As no response was received, a Notice of abandonment was mailed on May 25, 1999. This petition followed.

Petitioner asserts that applicant did not receive a copy of the Office action, and provides as evidence a copies of the Petitioners docket records where the Office action would have been entered. This information, in addition to the status letter received by the Office on December 21, 1998 proves that applicant did not receive the Office action.

Applicants' request is **GRANTED**. The application is restored to a pending status with the mailing of this letter.

The application will be forwarded to the examiner, for prompt remailing of the Office action.

Should there be any questions with regard to this letter please contact Sandra Morris or William R. Dixon, Jr. by letter addressed to the Director, Technology Center 1600/2900, Washington, DC 20231, or by telephone at (703) 308-3824 or by facsimile transmission at (703) 308-7922.

John Kittle
Director, Technology Center 1600/2900

UNITED STATES PATENT AND TRADEMARK OFFICE

UNITED STATES DEPARTMENT OF COMMERCE
United States Patent and Trademark Office
Address: COMMISSIONER FOR PATENTS
P.O. Box 1450
Alexandria, Virginia 22313-1450
www.uspto.gov

APPLICATION NO.	FILING DATE	FIRST NAMED INVENTOR	ATTORNEY DOCKET NO.	CONFIRMATION NO.
29/067,042	02/27/1997	RICHARD BOROVIAK	JWC-9670/US	5036

7590 03/03/2004

LAWRENCE J CRAIN ESQ
GREER BURNS & CRAIN LTD
300 SOUTH WACKER DRIVE
SUITE 2500
CHICAGO, IL 60606

EXAMINER
BAYNHAM, HOLLY H

ART UNIT	PAPER NUMBER
2911	21

DATE MAILED: 03/03/2004

Please find below and/or attached an Office communication concerning this application or proceeding.

UNITED STATES PATENT AND TRADEMARK OFFICE

COMMISSIONER FOR PATENTS
UNITED STATES PATENT AND TRADEMARK OFFICE
P.O. BOX 1450
ALEXANDRIA, VA 22313-1450
www.uspto.gov

LAWRENCE J. CRAIN
GREER, BURNS & CRAIN, LTD.
300 SOUTH WACKER DRIVE
SUITE 2500
CHICAGO, ILLINOIS 60606

In re Application of Richard Boroviak Application No. 29/067,042 Filed: February 27, 1997 Attorney Docket No. 1652.68157	PETITION DECISION

This is a decision on the petition under 37 CFR 1.137(b), filed September 25, 2003, to revive an unintentionally abandoned application.

The petition is **DISMISSED**.

This application became abandoned for failure to respond to the Notice of Allowance and Issue Fee due, mailed October 2, 2001, which set a three-month statutory period for payment of the Issue Fee. Upon failure to submit the Issue Fee by January 2, 2002, the case was abandoned. This petition followed.

A grantable petition under 37 CFR 1.137(b), as revised December 1, 1997, requires four items: (1) a petition and petition fee; (2) a complete response if not earlier made; (3) a statement that the *entire* period of delay in prosecution was unintentional; and (4) a terminal disclaimer and disclaimer fee of $55.00. Applicant's petition lacks items (2), (3) and (4), a complete response, the complete statement and the terminal disclaimer and fee. For all design patent applications, a terminal disclaimer must be filed (37 CFR 1.137(c)). Since applicant's former counsel did not receive the Notice of Allowance and Issue fee due, mailed October 2, 2001, a new Notice is included with this decision. The new Notice and Issue Fee due must be returned with any renewed petition submitted. Furthermore, where a petition pursuant to 37 CFR 1.37 is not filed within 1 year of the date of abandonment of the application, as in the present case, applicant is required to submit information as to when applicant first became aware of the abandonment of the application, and a showing as to how the delay in discovering the abandoned status of the application occurred. MPEP 711.03(c).

Any renewed petition in order to be considered timely must be filed within **TWO MONTHS** of the date of mailing of this decision.

Should there be any questions with regard to this letter please contact James Gandy, by letter

addressed to the Director, Technology Center 3700/2900, P.O. Box 1450 Alexandria, VA 22313-1450, or by telephone at (703) 305-3264.

John Kittle
Director, Technology Center 3700/2900

UNITED STATES PATENT AND TRADEMARK OFFICE

AUG 3 1 2004

Commissioner for Patents
United States Patent and Trademark Office
P.O. Box 1450
Alexandria, VA 22313-1450
www.uspto.gov

#25

LAWRENCE J CRAIN ESQ
GREER BURNS & CRAIN LTD
300 SOUTH WACKER DRIVE
SUITE 2500
CHICAGO, IL 60606

In re Application of	:
Richard Boroviak	:
Serial No.: 29/067,042	: PETITION DECISION
Filed: February 27, 1997	:
Attorney Docket No.: JWC-9670/US	:

This is a decision on applicant's renewed Petition under 37 CFR 1.137(b) filed May 13, 2004, to revive an unintentionally abandoned application. The delay in acting upon this petition is regretted.

This application became abandoned for failure to respond to the Notice of Allowance mailed October 2, 2001, which set a three-month statutory period to pay the Issue fee. As no response was submitted by January 2, 2002, the application was abandoned. Applicant filed a petition on September 25, 2003, which was dismissed as it lacked the statement, Issue fee, and a terminal disclaimer. Furthermore, as the petition was filed over one year from the date of abandonment, applicant was required to submit information regarding the delay in filing the Petition.

Applicant has now filed a complete petition. Furthermore, the declarations from applicant, the attorney of record, and applicant's previous council satisfy the requirement regarding the lengthy delay in filing the petition.

Applicant's petition is **GRANTED.**

The application will be forwarded to Publications Branch to issue as a Patent in due course.

Should there be any questions with respect to this decision, please contact Sandra Morris; by mail addressed to: Director, Technology Center 3700/2900, P.O. Box 1450, Alexandria, VA 22313-1450; or by telephone at (571) 272-2622.

John Kittle
Director, Technology Center 3700/2900

UNITED STATES
PATENT AND
TRADEMARK OFFICE

OCT 17 2003

UNDER SECRETARY OF COMMERCE FOR INTELLECTUAL PROPERTY AND
DIRECTOR OF THE UNITED STATES PATENT AND TRADEMARK OFFICE
WASHINGTON, D.C. 20231
WWW.USPTO.GOV

ROBERT E. KREBS
THELEN REID & PRIEST LLP
P.O. BOX 640640
SAN JOSE, CA 95164-0640

#8

In re Application of	:
Jeffrey C. Herold	:
Serial No.: 29/068,989	: PETITION DECISION
Filed: April 24, 1997	:
Docket Number: 033905-005	

This letter is in response to the petition under 37 CFR 1.137(b) submitted June 19, 2003, seeking revival of an application unintentionally abandoned.

This application became abandoned for failure to timely respond to the rejection first mailed January 22, 1999, and again on August 25, 1999. As no response was received, a Notice of Abandonment was mailed April 11, 2000.

A grantable petition under 37 CFR 1.137(b) for revival of an application abandoned unintentionally requires four items: (1) a petition and petition fee; (2) a complete response if not earlier made; (3) a statement that the entire period of delay in prosecution was unintentional; and (4) a terminal disclaimer and disclaimer fee. The filing of a Continued Prosecution Application is considered a proper response. Applicant's petition meets these requirements.

However, where a petition pursuant to 37 CFR 1.137 is not filed within 1 year of the date of abandonment of the application, applicant is required to submit information as to when applicant first became aware of the abandonment of the application, and a showing as to how the delay in discovering the abandoned status of the application occurred. MPEP 711.03(c). As this petition was filed over three years from when the application was abandoned, it is unlikely that the petition would be granted, unless applicant can explain how such a period of time passed before discovering the abandonment.

Applicant's petition must be **DISMISSED** in view of the deficiency noted above. Any renewed petition should be filed within **TWO MONTHS** of the mailing date of this letter in order to be considered timely.

Should there be any questions with regard to this letter please contact Sandra Morris; by letter addressed to the Director, Technology Center 3700/2900, P.O. Box 1450, Alexandria VA 22313-1450; or by telephone at (703) 305-3102 or by facsimile transmission at (703) 305-5679.

John Kittle
Director, Technology Center 3700/2900

UNITED STATES PATENT AND TRADEMARK OFFICE

COMMISSIONER FOR PATENTS
UNITED STATES PATENT AND TRADEMARK OFFICE
P.O. BOX 1450
ALEXANDRIA, VA 22313-1450
www.uspto.gov

FEB 12 2004

ROBERT E. KREBS
THELEN REID & PRIEST LLP
P.O. BOX 640640
SAN JOSE, CA 95164-0640

#12

In re Application of
Jeffrey C. Herold
Serial No.: 29/068,989
Filed: April 24, 1997
Docket Number: 033905-005

: PETITION DECISION

This letter is in response to the renewed petition under 37 CFR 1.137(b) submitted December 17, 2003, seeking revival of an application unintentionally abandoned.

This application became abandoned for failure to timely respond to the rejection first mailed January 22, 1999, and again on August 25, 1999. As no response was received, a Notice of Abandonment was mailed April 11, 2000. A Petition to revive was filed June 19, 2003, which was dismissed, as the petition was not filed within one year of the date of abandonment of the application.

Applicant himself has stated in the enclosed declaration that he was unaware that his patent application had gone abandoned. However, a statement from his previous representative Joseph Page has not been submitted. An Office action and a Notice of Abandonment were both sent to Mr. Page, and no response was received by the Patent Office. As Mr. Page was responsible for replying, a statement from him should be submitted. Applicant may instead wish to consider refiling his application, as so much time has passed between the filing of his application, and as there are inherent deficiencies with the original drawing disclosure.

Applicant's petition must be **DISMISSED** in view of the deficiency noted above. Any renewed petition should be filed within **TWO MONTHS** of the mailing date of this letter in order to be considered timely.

Should there be any questions with regard to this letter please contact Sandra Morris; by letter addressed to the Director, Technology Center 3700/2900, P.O. Box 1450, Alexandria VA 22313-1450; or by telephone at (703) 305-3102 until February 11, or (571) 272-2622 thereafter.

John Kittle
Director, Technology Center 3700/2900

UNITED STATES PATENT AND TRADEMARK OFFICE

JUL 27 2004

COMMISSIONER FOR PATENTS
UNITED STATES PATENT AND TRADEMARK OFFICE
P.O. BOX 1450
ALEXANDRIA, VA 22313-1450
www.uspto.gov

#14

ROBERT E. KREBS
THELE REID & PRIEST LLP
P.O. BOX 640640
SAN JOSE, CA 95164-0640

In re Application of	
Jeffrey C. Herold	:
Serial No.: 29/068,989	:
Filed: April 24, 1997	: PETITION DECISION
Attorney Docket No.: 033905-005	:
	:

This is a decision on applicant's renewed petition to revive patent application under 37 CFR 1.137(b), filed on April 7, 2004, to revive an unintentionally abandoned application.

This application became abandoned for failure to submit a response to the Office action mailed January 22, 1999 and August 25, 1999. Applicant filed a petition on June 19, 2003, and again on December 17, 2003, which were dismissed.

Applicant was advised that as the petition was filed over one year from when the application was abandoned, that a statement from applicant's previous council Mr. Page should be submitted. However, applicant's new attorney has submitted a declaration, stating that Mr. Page has refused to provide a statement.

Applicant's petition is **GRANTED**.

The application will be forwarded to be processed as a CPA in due course.

Should there be any questions with respect to this decision, please contact Sandra Morris; by mail addressed to: Director, Technology Center 3700/2900, P.O. Box 1450, Alexandria, VA 22313-1450; or by telephone at (571) 272-2622.

John Kittle
Director, Technology Center 3700/2900

UNITED STATES PATENT AND TRADEMARK OFFICE

Commissioner for Patents
United States Patent and Trademark Office
P.O. Box 1450
Alexandria, VA22313-1450
www.uspto.gov

COPY MAILED

JUL 02 2007

OFFICE OF PETITIONS

BANNER & WITCOFF
1001 G STREET N W
ELEVENTH FLOOR
WASHINGTON DC 20001-4597

In re Patent No. D394,668	:	
Issue Date: May 26,1998	:	
Application No. 29/073,114	:	ON PETITION
Filed: June 30, 1997	:	
Attorney Docket Number: 1582.09332	:	

This is a decision on the petition, filed February 6, 2007, requesting the issuance of a duplicate Letters Patent for the above-identified application.

The petition is **GRANTED**.

Since it is U.S. Patent and Trademark Office practice to assure mailing of all papers on the date indicated, there is a strong presumption that papers duly addressed and indicated as mailed, such as the Letters Patent in this application, are timely delivered to the addressee. To overcome this presumption, a verified statement with supporting evidence, such as any records which would disclose the receipt of other correspondence mailed from the U.S. Patent and Trademark Office on or about May 26, 1998, but fail to disclose receipt of the Letters Patent mailed on that date, should be promptly submitted. Further, copies of records on which receipt of the Letters Patent would have been entered had it been received are required.

However, if the loss of the Letters Patent was not the fault of the U.S. Patent and Trademark Office or if petitioner simply wishes to avoid overcoming the above-noted presumption, a petition may be filed under 37 CFR 1.182 accompanied by a petition fee of $400.00 requesting a duplicate Letters Patent. Upon receipt of the petition and petition fee, the request for a duplicate Letters Patent will be granted.

Petitioners state that the Letters Patent was received from the USPTO and was subsequently lost. The petition fee in the amount of $400.00 has been charged to deposit account no. 19-0733 per the authorization but not in the amount of $130.00 as was indicated.

A copy of this decision is being forwarded to Publishing Division for issuance of a duplicate Letters Patent.

The Publishing Division is directed to issue a duplicate Letters Patent.

Telephone inquiries concerning this decision may be directed to the undersigned Senior Petitions Attorney at (571) 272-3212. Inquiries regarding the issuance of a duplicate Letters Patent may be directed to the Publishing Division at (703) 308-9250.

Patricia Faison-Ball

Patricia Faison-Ball
Senior Petitions Attorney
Office of Petitions

cc: Krystal Paige, South Tower, 8th Floor (Fax – (571) 270-9937)

UNITED STATES
PATENT AND
TRADEMARK OFFICE

AUG 16 2001

UNDER SECRETARY OF COMMERCE FOR INTELLECTUAL PROPERTY AND
DIRECTOR OF THE UNITED STATES PATENT AND TRADEMARK OFFICE
WASHINGTON, D.C. 20231
WWW.USPTO.GOV

#17

CARL L JOHNSON
JACOBSON AND JOHNSON
ONE WEST WATER STREET, SUITE 285
ST.PAUL, MI 55107-2080

In re Application of	:
Scott D. Landes	:
Serial No.: 29/082,541	: WITHDRAWAL OF ABANDONMENT
Filed: January 26, 1998	:
Attorney Docket No.: 5206	:

This is in response to applicant's petition to withdraw holding of abandonment, which is being treated as a request for withdrawal of abandonment under 37 CFR 1.181, filed April 27, 2001, based on failure to receive the second Defective Notice of Appeal or Brief.

This application was held abandoned based on applicant's failure to timely respond to the Notice, which was mailed to applicant on September 21, 2000. Applicant had one month to respond; as a new Appeal Brief was not filed, a Notice of Abandonment was mailed to applicant on December 18, 2000.

Applicant presents as evidence a declaration and a copy of the October docketing record, which state that there is no record of the Notice ever being received in the office.

In view that applicant never received the Notice of Defective Appeal Brief, the Notice of Abandonment is rescinded and the application is restored to a pending status with this letter.

Applicants' petition under 37 CFR 1.181 is **GRANTED**.

The application will be forwarded to the Examiner for consideration of the newly submitted Appeal Brief.

Should there be any questions with regard to this letter please contact Sandra Morris, by letter addressed to the Director, Technology Center 3700/2900, Washington, DC 20231, or by telephone at (703) 305-3102 or by facsimile transmission at (703) 305-5679.

John Kittle
Director, Technology Center 3700/2900

UNITED STATES PATENT AND TRADEMARK OFFICE

Commissioner for Patents
United States Patent and Trademark Office
P.O. Box 1450
Alexandria, VA 22313-1450
www.uspto.gov

#19

GLORIA GREMILLION
540 EUCALYPTUS STREET
PORT ALLEN LA 70767

In re Application of
Gloria Gremillion
Serial No.: 29/084,379
Filed: March 2, 2998
Attorney Docket No.:

: PETITION DECISION

This is a decision on the renewed petition under 37 CFR 1.137(b), filed March 31, 2003, to revive an unintentionally abandoned application.

The petition is **DISMISSED**.

A review of the file history shows that the Office mailed a Final rejection to applicant on April 16, 2001, giving applicant a three-month period of time to respond. As no response was received by July 16, 2001, a Notice of Abandonment was mailed to applicant November 19, 2001. Applicant sent a letter January 22, 2002 and faxed a communication on February 29, 2002. Neither of these letter was timely submitted, nor did they put the application in condition for allowance. Applicant was informed of this fact in a letter from Supervisory Patent Examiner Louis Zarfas on March 18, 2002. Applicant filed a letter on February 3, 2003, where applicant was advised that a petition under 37 CFR 1.137(b) could be filed, but that a response must be filed which places the application in condition for allowance, or a Notice of Appeal or continuing application must be filed.

A grantable petition under 37 CFR 1.137(b), as revised December 1, 1997, requires four items: (1) a petition and petition fee; (2) a complete response if not earlier made; (3) a statement that the entire period of delay in prosecution was unintentional; and (4) a terminal disclaimer and disclaimer fee. This petition again lacks item (2).

Applicant has still not overcome the Final rejection of the claim, because the drawings received with this petition still contain new matter. Please refer to the letter from Examiner Delehanty which is enclosed. The petition cannot be granted until the case is in condition for allowance, or a Notice of Appeal or continuing application is filed.

Therefore, the application is still abandoned.

Any renewed petition in order to be considered timely must be filed within TWO MONTHS of the date of mailing of this decision.

Should there be any questions with respect to this decision, please contact Sandra Morris; by mail addressed to: Director, Technology Center 3700/2900, P.O. Box 1450, Alexandria, VA 22313-1450; or by telephone at (703) 305-3102 or by facsimile transmission at (703) 305-5679.

John Kittle
Director, Technology Center 3700/2900

The Final rejection of the claim has NOT been withdrawn because the amended drawings received in paper #9 contain new matter. Specifically, the shape and appearance of the top surface as well as the placement of the circular article in the amended drawing differs from the appearance and placement in the originally filed drawings. Additionally, the legs of the chair shown in the amended drawings are reconfigured in shape and appearance compared to the configuration of the legs of the originally filed drawings. Therefore, the final rejection under 35 U.S.C. 112, first paragraph, for new matter (35 U.S.C. 132, 37, CFR 1.121) is not withdrawn.

Robert A. Delehanty
Design Patent Examiner
September 29, 2003

UNITED STATES PATENT AND TRADEMARK OFFICE

COMMISSIONER FOR PATENTS
UNITED STATES PATENT AND TRADEMARK OFFICE
P.O. BOX 1450
ALEXANDRIA, VA 22313-1450
www.uspto.gov

MAY 06 2004

GLORIA GREMILLION
540 EUCALYPTUS STREET
PORT ALLEN LA 70767

#21

In re Application of	:
Gloria Gremillion	:
Serial No.: 29/084,379	: PETITION DECISION
Filed: March 2, 2998	:
Attorney Docket No.:	:

This is a decision on the renewed petition under 37 CFR 1.137(b), filed December 4, 2003, to revive an unintentionally abandoned application.

The petition is **DISMISSED**.

A review of the file history shows that the Office mailed a Final rejection to applicant on April 16, 2001, giving applicant a three-month period of time to respond. As no response was received by July 16, 2001, a Notice of Abandonment was mailed to applicant November 19, 2001. Applicant sent a letter January 22, 2002 and faxed a communication on February 29, 2002. Neither of these letter was timely submitted, nor did they put the application in condition for allowance. Applicant was informed of this fact in a letter from Supervisory Patent Examiner Louis Zarfas on March 18, 2002. Applicant filed a letter on February 3, 2003, where applicant was advised that a petition under 37 CFR 1.137(b) could be filed, but that a response must be filed which places the application in condition for allowance, or a Notice of Appeal or continuing application must be filed. Applicant filed a Petition on March 31, 2003 which was dismissed, as the new drawings did not overcome the final rejection.

A grantable petition under 37 CFR 1.137(b), as revised December 1, 1997, requires four items: (1) a petition and petition fee; (2) a complete response if not earlier made; (3) a statement that the entire period of delay in prosecution was unintentional; and (4) a terminal disclaimer and disclaimer fee. This petition again lacks item (2).

Applicant has still not overcome the Final rejection of the claim, because the drawings received with this petition still contain new matter. As noted by Examiner Delehanty, the circular form on the top surface shown in Figs. 1 and 2 of the new drawings is not eclipsed by the sidewall as shown in the original drawings. Furthermore, the circular form shown in Fig. 1 of the new drawings shows a depth whereas the eclipsed circle in the original drawings did not show a depth. Moreover, Fig. 3 of the new drawings shows the underside of the tub chair in a cross-sectional fashion that was not disclosed in the original drawings. The petition cannot be granted until the case is in condition for allowance, or a Notice of Appeal or continuing application is filed.

Therefore, the application is still abandoned.

Any renewed petition in order to be considered timely must be filed within TWO MONTHS of the date of mailing of this decision.

Should there be any questions with respect to this decision, please contact Sandra Morris; by mail addressed to: Director, Technology Center 3700/2900, P.O. Box 1450, Alexandria, VA 22313-1450; or by telephone at (571) 272-2622.

John Kittle
Director, Technology Center 3700/2900

UNITED STATES PATENT AND TRADEMARK OFFICE

SEP 24 2004

Commissioner for Patents
United States Patent and Trademark Office
P.O. Box 1450
Alexandria, VA 22313-1450
www.uspto.gov

#23

GLORIA GREMILLION
540 EUCALYPTUS STREET
PORT ALLEN, LA 70767

In re Application of	:
Gloria Gremillion	:
Serial No.: 29/084,379	: PETITION DECISION
Filed: March 2, 1998	:
Attorney Docket No.:	:

This is a decision on applicant's renewed Petition under 37 CFR 1.137(b) received June 23, 2004, to revive an unintentionally abandoned application.

A grantable petition under 37 CFR 1.137(b), as revised December 1, 1997, requires four items: (1) a petition and petition fee; (2) a complete response if not earlier made; (3) a statement that the entire period of delay in prosecution was unintentional; and (4) a terminal disclaimer and disclaimer fee. Applicant's new drawings overcome the final rejection of the claim.

Applicant's petition is **GRANTED.**

The application will be forwarded to the Examiner for evaluation of applicant's response in due course.

Should there be any questions with respect to this decision, please contact Sandra Morris; by mail addressed to: Director, Technology Center 3700/2900, P.O. Box 1450, Alexandria, VA 22313-1450; or by telephone at (571) 272-2622.

John Kittle
Director, Technology Center 3700/2900

UNITED STATES PATENT AND TRADEMARK OFFICE

COMMISSIONER FOR PATENTS
UNITED STATES PATENT AND TRADEMARK OFFICE
P.O. BOX 1450
ALEXANDRIA, VA 22313-1450
www.uspto.gov

MARGER JOHNSON & MCCOLLOM, P.C.
210 SW MORRISON STREET, SUITE 400
PORTLAND, OR 97204

COPY MAILED
MAY 12 2006
OFFICE OF PETITIONS

In re Application of
Anderson et al. :
Application No. 29/097,014 :
Filed: November 25, 1998 : NOTICE
Patent No. D425873 :
Issued: May 30, 2000 :
Title of Invention: DATA ENTRY PAD :

This is a notice regarding your request to change your entity status to large.

The request requires a fee under 37 CFR 1.17(i) of $130.00.

Also, errors in small entity status are excused by payment of the deficiency owed. See 37 CFR 1.28(c). Applicant has failed to indicate the deficient fee amount or submit payment thereof.

Accordingly, the petition is dismissed.

Further correspondence with respect to this matter should be addressed as follows:

By mail: Commissioner for Patents
PO Box 1450
Alexandria, VA 22313-1450

By FAX: (571) 273-8300
Attn: Office of Petitions

By hand: Customer Service Window
Randolph Building
401 Dulany Street
Alexandria, VA 22314

Telephone inquiries concerning this matter should be directed to the undersigned at (571) 272-3232.

Derek L. Woods
Derek L. Woods
Attorney
Office of Petitions

UNITED STATES DEPARTMENT OF COMMERCE
Patent and Trademark Office
ASSISTANT SECRETARY AND COMMISSIONER
OF PATENTS AND TRADEMARKS
Washington, D.C. 20231

DAVID TOREN, ESQ.
INTELLECTUAL PROPERTY GROUP
BROWN & WOOD LLP
ONE WORLD TRADE CENTER
NEW YORK, NY 10048-0557

In re Application of	:
Gunther Bartholomai	:
Serial No.: 29/100,428	: WITHDRAWAL OF ABANDONMENT
Filed: February 11, 1999	:
Attorney Docket No.: DT-2930	:

This is in response to applicants' Petition under 37 CFR 1.181, filed August 17, 2000, based on having never having received the Notice to File Missing Parts of Application. The delay in acting upon this petition is regretted.

A review of the file history shows that the Office mailed the Notice to File Missing Parts of Application to applicant on March 12, 1999, setting a two month statutory period for response, to submit a signed Declaration and surcharge of $130.00. As no response was received, the case was abandoned on June 19, 2000. This petition followed.

Applicant states that a copy of the Notice was never received, and provides copies of the docket sheet showing the absence of a Notice having been received. In view of this it is concluded that applicant never received the Notice to Filing Missing Parts.

Applicants' request is **GRANTED**. The application is restored to a pending status with the mailing of this letter.

A new Notice to File Missing Parts of Application will be mailed to applicant.

Should there be any questions with regard to this letter please contact Sandra Morris, by letter addressed to the Director, Technology Center 3700/2900, Washington, DC 20231, or by telephone at (703) 305-3102 or by facsimile transmission at (703) 308-4242.

John Kittle
Director, Technology Center 3700/2900

UNITED STATES PATENT AND TRADEMARK OFFICE

COMMISSIONER FOR PATENTS
UNITED STATES PATENT AND TRADEMARK OFFICE
WASHINGTON, D.C. 20231
www.uspto.gov

Paper No. 5

COPY MAILED

APR 16 2003

OFFICE OF PETITIONS

JEFFREY N CUTLER
PITTS AND BRITTIAN
P O BOX 51295
KNOXVILLE TN 37950-1295

In re Application of
Peter Barile et al.
Application No. 29/100,647
Filed: February 16, 1999
Attorney Docket No. 25029

ON PETITION

This is a decision on the petition filed May 31, 2001, to revive the above identified application under 37 CFR 1.137(b).[1]

The petition is **GRANTED**.

This application became abandoned on May 2, 1999, for failure to file a timely response to the Notice to File Missing Parts "Notice" mailed March 1, 1999, which set a two (2) month shortened statutory period for reply. No extensions of the time for reply under 37 CFR 1.136(a) were obtained. Accordingly, a Notice of Abandonment was mailed June 19, 2000.

The Notice to File Missing Parts indicated that the signature of Joint Inventor Steinfeld was missing from the oath or declaration. Petitioner's contend that the original Declaration, Power of Attorney filed with the application was complete with the signatures of both inventors.

A review of the file reveals that page 2 of the declaration filed was missing and thus the signatures of neither of the inventors was included. Instead a page signed by Manfred Steinfeld and acknowledged by a Notary was included. That page found in the file does not bear the signature of Peter Barile and is clearly not page 2 as submitted by the petitioner with the petition of May 31, 2001.

Additionally, the Terminal Disclaimer filed on May 31, 2001 is unnecessary as a condition for revival pursuant to the provisions of 37 CFR 1.137 (b) under the current rules. 37 CFR 1.137 (c) specifically states that such disclaimers are only required where an application was filed on or before June 8, 1995. Therefore, the terminal disclaimer filed with the petition will not be processed and the $110.00 fee paid will be credited to Deposit Account No. 16-1910.

This application file is being forwarded to the Office of Initial Patent Examination for further processing.

Telephone inquiries concerning this matter may be directed to the undersigned Petitions Attorney at (703) 305-4497.

Patricia Faison-Ball

Patricia Faison-Ball
Senior Petitions Attorney
Office of Petitions

---

[1]Effective December 1, 1997, the provisions of 37 CFR 1.137(b) now provide that where the delay in reply was unintentional, a petition may be filed to revive an abandoned application or a lapsed patent pursuant to 37 CFR 1.137(b). A grantable petition filed under the provisions of 37 CFR 1.137(b) must be accompanied by:

(1) the required reply, unless previously filed. In a nonprovisional application abandoned for failure to prosecute, the required reply may be met by the filing of a continuing application. In a nonprovisional utility or plant application filed on or after June 8, 1995, and abandoned for failure to prosecute, the required reply may also be met by the filing of a request for continued examination in compliance with § 1.114. In an application or patent, abandoned or lapsed for failure to pay the issue fee or any portion thereof, the required reply must be the payment of the issue fee or any outstanding balance thereof.

(2) the petition fee as set forth in 37 CFR 1.17(m);

(3) a statement that the entire delay in filing the required reply from the due date for the reply until the filing of a grantable petition pursuant to 37 CFR 1.137(b) was unintentional. The Commissioner may require additional information where there is a question whether the delay was unintentional; and

(4) any terminal disclaimer (and fee as set forth in 37 CFR 1.20(d)) required pursuant to 37 CFR 1.137(c)).

UNITED STATES PATENT AND TRADEMARK OFFICE

Commissioner for Patents
United States Patent and Trademark Office
Washington, D.C. 20231
www.uspto.gov

JUL 5 2001

#5

NIXON & VANDERHYE, PC
8TH FLOOR
1100 N. GLEBE ROAD
ARLINGTON, VA 22201

In re Application of	:	
Akiyama, et al.	:	
Application No. 29/101,266	:	ON PETITION
Filed: March 1, 1999	:	
Attorney Docket No. 790-927	:	

This is a decision on the petition under 37 CFR 1.181, filed November 14, 2000 (originally filed June 29, 2000), to withdraw the holding of abandonment in the above-identified application.

The petition is **GRANTED**.

The above-identified application became abandoned for failure to reply in a timely manner to the Notice to File Missing Parts of Application (Notice) mailed March 17, 1999. The Notice set a period for reply of two (2) months from the mail date of the Notice. No extensions of time under the provisions of 37 CFR 1.136(a) were obtained. Accordingly, the above-identified application became abandoned on May 18, 1999. A Notice of Abandonment was mailed on June 19, 2000.

Petitioner asserts that the Notice was never received. The showing required to establish non-receipt of an Office communication must include a statement from the practitioner stating that the Office communication was not received by the practitioner and attesting to the fact that a search of the file jacket and docket records indicates that the Office communication was not received. A copy of the docket record where the non-received Office communication would have been entered had it been received and docketed must be attached to and referenced in practitioner's statement. See Withdrawing the Holding of Abandonment When Office Actions Are Not Received; Notice 1156 Off. Gaz. Pat. Office 53 (November 16, 1993).

Petitioner has provided the required statement and copy of the docket record for the above-identified file that indicates non-receipt of the Notice.

Accordingly, the petition is granted and the application is restored to a pending status with the mailing of this letter.

The file is being forwarded to the Office of Initial Patent Examination for remailing of the Notice.

Telephone inquiries should be directed to Petitions Attorney Edward Tannouse at (703) 306-9200.

John Kittle
Director, Technology Center 3700/2900

OIPE
JUN 22 2006
PATENT & TRADEMARK OFFICE

UNITED STATES PATENT AND TRADEMARK OFFICE

COMMISSIONER FOR PATENTS
UNITED STATES PATENT AND TRADEMARK OFFICE
P.O. BOX 1450
ALEXANDRIA, VA 22313-1450
www.uspto.gov

RYAN KROMHOLZ & MANION, S.C.
POST OFFICE BOX 26618
MILWAUKEE WI 53226

6/27/05

DOCKETED
DUE: 8/27/2005
CLERK:

In re Application of
Michael S. Kellogg
Serial No.: 29/102,936
Filed: April 5, 1999
Attorney Docket No.: 1156-16344

: PETITION DECISION

This is a decision on the Petition to Revive under 37 CFR 1.137(b), received April 28, 2005, to revive an unintentionally abandoned application.

The petition is **DISMISSED**.

This application became abandoned for failure to fully respond to the Office action mailed May 25, 2000. As no response was received by August 25, 2000, a Notice of Abandonment was mailed January 3, 2001. This petition followed.

A grantable petition under 37 CFR 1.137(b), as revised December 1, 1997, requires four items: (1) a petition and petition fee; (2) a complete response if not earlier made; (3) a statement that the entire period of delay in prosecution was unintentional; and (4) a terminal disclaimer and disclaimer fee. Applicant has not used to correct terminal disclaimer for a petition; a copy has been enclosed for applicant's use.

Furthermore, where a petition pursuant to 37 CFR 1.137 is not filed within 1 year of the date of abandonment of the application, applicant is required to submit information as to when applicant first became aware of the abandonment of the application, and a showing as to how the delay in discovering the abandoned status of the application occurred. MPEP 711.03(c). Applicant has done this; however, a showing as to how the delay in discovering the abandoned status of the application occurred despite the exercise of due care or diligence on the part of the applicant has not been presented. It is unclear why a Change of Address was submitted over two years after the Office action was mailed and not earlier, and why the status had not been checked prior to April 2005 for an application that was filed in 1999. More information from applicant is required.

Any renewed petition in order to be considered timely must be filed within TWO MONTHS of the date of mailing of this decision.

Should there be any questions with respect to this decision, please contact Sandra Morris; by mail addressed to: Director, Technology Center 1700/2900, P.O. Box 1450, Alexandria, VA 22313-1450; or by telephone at (571) 272-2622.

Jacqueline Stone
Director, Technology Center 1700/2900

JUL - 1 2005

OIPE IAP69
JUN 2 2 2006
PATENT & TRADEMARK OFFICE

PTO/SB/63 (10-00)
Approved for use through 10/31/2002. OMB 0651-0031
U.S. Patent and Trademark Office; U. S. DEPARTMENT OF COMMERCE
Under the Paperwork Reduction Act of 1995, no persons are required to respond to a collection of information unless it displays a valid OMB control number.

TERMINAL DISCLAIMER TO ACCOMPANY PETITION

Docket Number (Optional)

In re Application of:

Name:

Application Number:

Filed:

For:

The owner*, _____of _____percent interest in the above-identified application hereby disclaims a terminal part of the term of any patent granted the above-identified application equivalent to: (1) if the above-identified application is a design application, the period of abandonment of the above-identified application, and (2) if the above-identified application is a utility or plant application, the lesser of: (a) the period of abandonment of the application; or (b) the period extending beyond twenty years from the date on which the above-identified application was filed in the United States or, if the application contains a specific reference to an earlier filed application(s) under 35 U.S.C. 120, 121, or 365(c), from the date on which the earliest such application was filed. This disclaimer also applies to any patent granted on a utility or plant application filed before June 8, 1995, or a design application, that contains a specific reference under 35 U.S.C. 120, 121, or 365(c) to the above-identified application. This disclaimer is binding upon the grantee, and its successors or assigns.

Check either box 1 or 2 below, if appropriate.

1. ☐ For submissions on behalf of an organization (e.g., corporation, partnership, university, government agency, etc.), the undersigned is empowered to act on behalf of the organization.

2. ☐ The undersigned is an attorney or agent of record.

_____ Signature _____ Date

_____ Typed or printed name

☐ Terminal disclaimer fee under 37 CFR 1.20(d) included.

WARNING: Information on this form may become public. Credit card information should not be included on this form. Provide credit card information and authorization on PTO-2038.

* Statement under 37 CFR 3.73(b) is required if terminal disclaimer is signed by the assignee (owner). Form PTO/SB/96 may be used for making this certification. See MPEP § 324.

Burden Hour Statement: This form is estimated to take 0.2 hours to complete. Time will vary depending upon the needs of the individual case. Any comments on the amount of time you are required to complete this form should be sent to the Chief Information Officer, U.S. Patent and Trademark Office, Washington, DC 20231. DO NOT SEND FEES OR COMPLETED FORMS TO THIS ADDRESS. SEND TO: Assistant Commissioner for Patents, Washington, DC 20231.

UNITED STATES PATENT AND TRADEMARK OFFICE

COMMISSIONER FOR PATENTS
UNITED STATES PATENT AND TRADEMARK OFFICE
P.O. BOX 1450
ALEXANDRIA, VA 22313-1450
www.uspto.gov

RYAN KROMHOLZ & MANION, S.C.
POST OFFICE BOX 26618
MILWAUKEE WI 53226

6/27/05

In re Application of
Michael S. Kellogg
Serial No.: 29/102,936
Filed: April 5, 1999
Attorney Docket No.: 1156-16344

: PETITION DECISION

This is a decision on the Petition to Revive under 37 CFR 1.137(b), received April 28, 2005, to revive an unintentionally abandoned application.

The petition is **DISMISSED**.

This application became abandoned for failure to fully respond to the Office action mailed May 25, 2000. As no response was received by August 25, 2000, a Notice of Abandonment was mailed January 3, 2001. This petition followed.

A grantable petition under 37 CFR 1.137(b), as revised December 1, 1997, requires four items: (1) a petition and petition fee; (2) a complete response if not earlier made; (3) a statement that the entire period of delay in prosecution was unintentional; and (4) a terminal disclaimer and disclaimer fee. Applicant has not used to correct terminal disclaimer for a petition; a copy has been enclosed for applicant's use.

Furthermore, where a petition pursuant to 37 CFR 1.137 is not filed within 1 year of the date of abandonment of the application, applicant is required to submit information as to when applicant first became aware of the abandonment of the application, and a showing as to how the delay in discovering the abandoned status of the application occurred. MPEP 711.03(c). Applicant has done this; however, a showing as to how the delay in discovering the abandoned status of the application occurred despite the exercise of due care or diligence on the part of the applicant has not been presented. It is unclear why a Change of Address was submitted over two years after the Office action was mailed and not earlier, and why the status had not been checked prior to April 2005 for an application that was filed in 1999. More information from applicant is required.

Any renewed petition in order to be considered timely must be filed within TWO MONTHS of the date of mailing of this decision.

Should there be any questions with respect to this decision, please contact Sandra Morris; by mail addressed to: Director, Technology Center 1700/2900, P.O. Box 1450, Alexandria, VA 22313-1450; or by telephone at (571) 272-2622.

Jacqueline Stone
Director, Technology Center 1700/2900

Approved
Jacqueline M. Stone
Jacqueline M. Stone, Director
Technology Center 1700

UNITED STATES PATENT AND TRADEMARK OFFICE

COMMISSIONER FOR PATENTS
UNITED STATES PATENT AND TRADEMARK OFFICE
P.O. BOX 1450
ALEXANDRIA, VA 22313-1450
www.uspto.gov

#20

Ryan, Kromholz, & Manion, S.C.
Post Office Box 26618
Milwaukee WI 53226

In re Application of
Michael S. Kellogg et al.
Application No. 29/102,936
Filed: April 5, 1999
Attorney Docket No. 1156.16344-DES

DECISION ON PETITION

This is a decision on the petition filed August 18, 2005, entitled "Request for Reconsideration of the Dismissal of the Petition to Revive." The petition requests reconsideration of the decision dismissing the petition under 37 CFR 1.137(b) to revive an unintentionally abandoned application. This is also a decision on the copy of the August 18, 2005 petition filed on June 22, 2006.

This petition has been forwarded to the Acting Director of the Office of Patent Legal Administration for decision.

The petition under 37 CFR 1.137(b) filed on August 18, 2005 is **granted**. The petition under 37 CFR 1.137(b) filed on June 22, 2006 has been rendered **moot**.

REVIEW OF THE PERTINENT FACTS

- On April 5, 1999, the above-identified application was filed.
- On May 25, 2000, a first Office action was mailed.
- On January 3, 2001, a notice of abandonment, for failure to respond to the May 25, 2000 Office action, was mailed.
- On May 17, 2001, an information disclosure statement was filed.
- On April 15, 2002, an information disclosure statement was filed.
- On June 19, 2002, a notice by the Office that the correspondence address had been changed to that of customer number 26308, was placed in the file.
- On August 26, 2002, an information disclosure statement was filed.
- On April 5, 2005, a power to inspect was filed.

- On April 28, 2005, a petition under 37 CFR 1.137(b) to revive an unintentionally abandoned application was received. The petition was accompanied by a reply to the May 25, 2000 Office action in the form of an amendment and a terminal disclaimer under 37 CFR 1.321(c) to obviate a double patenting rejection, an information disclosure statement, and a paper entitled "Terminal Disclaimer In Compliance with a Petition for Revival of an Application for Patent Abandoned Unintentionally Under 37 CFR 1.137(b)."

- On June 27, 2005, a decision dismissing the petition for failure to submit a proper terminal disclaimer under 37 CFR 1.137(d), was mailed.

- On August 18, 2005, the present petition, entitled "Request for Reconsideration of the Dismissal of the Petition to Revive," was received. The petition is accompanied by a terminal disclaimer as required by 37 CFR 1.137(d), a declaration by Mrs. Judith M. Dunaway, and Exhibits entitled "JMD" Nos. 1, 2-53, 2-54, 2-55, 3, 4-4, 4-5, 4-6, 4-7, 5, and 6.

- On June 22, 2006, a copy of the August 18, 2005 petition, including a copy of the above-described attachments to the August 18, 2005 petition, was received.

- Also on June 22, 2006, a request for reconstruction of a lost file was received.

- On December 15, 2005, an information disclosure statement was filed.

- On February 15, 2007, a duplicate of the December 15, 2005 information disclosure statement was received by facsimile transmission. The February 15, 2007 information disclosure statement included a certificate of mailing dated December 13, 2005, and a postcard receipt stamped by the Office with the date of December 15, 2005.

STATUTES, RULES, AND PATENT EXAMINING PROCEDURES

37 CFR 1.137 provides, in pertinent part:

> "(b) *Unintentional.* If the delay in reply by applicant or patent owner was unintentional, a petition may be filed pursuant to this paragraph to revive an abandoned application . . . A grantable petition pursuant to this paragraph must be accompanied by:
>
> (1) The reply required to the outstanding Office action or notice, unless previously filed;
> (2) The petition fee as set forth in § 1.17(m);
> (3) A statement that the entire delay in filing the required reply from the due date for the reply until the filing of a grantable petition pursuant to this paragraph was unintentional. The Director may require additional information where there is a question whether the delay was unintentional; and
> (4) Any terminal disclaimer (and fee set forth in § 1.20(d)) required pursuant to paragraph (d) of this section."

"(d) *Terminal Disclaimer*

(1) Any petition to revive pursuant to this section in a design application must be accompanied by a terminal disclaimer and fee as set forth in § 1.321 dedicating to the public a terminal part of the term of any patent granted thereon equivalent to the period of abandonment."

DECISION

As required by 37 CFR 1.137(b)(1) and (b)(2), the petition filed on April 28, 2005, was accompanied by the required reply to the outstanding Office action of May 25, 2000 and the petition fee. The reply is in the form of an amendment, a terminal disclaimer under 37 CFR 1.321(c) to obviate a double patenting rejection, an information disclosure statement, and the appropriate fees for the terminal disclaimer under 37 CFR 1.321(c), as well as for a terminal disclaimer under 37 CFR 1.137(d.) The April 28, 2005 petition also included the statement required under 37 CFR 1.137(b)(3) that the entire delay in filing the required reply from the due date for the required reply until the filing of a grantable petition under 37 CFR 1.137(b) was unintentional.

As stated in the decision mailed June 27, 2005, however, the terminal disclaimer under 37 CFR 1.137(d) that accompanied with the April 28, 2005 petition was improper. The April 28, 2005 petition, therefore, failed to meet the requirements of 37 CFR 1.137(b)(4). The June 27, 2005 decision also required additional information regarding how the delay in discovering the abandoned status of the application occurred.

The present petition filed on August 18, 2005, is accompanied by a proper terminal disclaimer pursuant to 37 CFR 1.137(d), and a showing, in the form of a declaration by Mrs. Judith M. Dunaway and accompanying exhibits, explaining how the delay in discovering the abandoned status occurred. Petitioner's showing filed on August 18, 2005 is sufficient to indicate that the entire delay in filing the required reply from the due date for the reply until the August 18, 2005 filing of the instant petition was unintentional.

All of the requirements under 37 CFR 1.137(b) having been met, the present petition under 37 CFR 1.137(b) on August 18, 2005 has been **granted**. The petition under 37 CFR 1.137(b), filed on June 22, 2006, is a duplicate of the August 18, 2005 petition, and has been rendered **moot**.

The period disclaimed is equivalent to the period between November 27, 2000 (the due date for the reply) and August 18, 2005 (the filing date of the instant grantable petition under 37 CFR 1.137(b).)

This file will be forwarded to Technology Center Art Unit 2914 for processing of the amendment, the terminal disclaimer to obviate a double patenting rejection, and the information disclosure statements of May 17, 2001, April 15, 2002, August 26, 2002, April 28, 2005, and February 15, 2007.

Any questions concerning this matter may be directed to Cynthia L. Nessler, Senior Legal Advisor, Office of Patent Legal Administration, at (571) 272-7724.

Robert A. Clarke

Robert A. Clarke
Acting Director
Office of Patent Legal Administration
Office of the Deputy Commissioner
for Patent Examination Policy

UNITED STATES PATENT AND TRADEMARK OFFICE

Commissioner for Patents
United States Patent and Trademark Office
P.O. Box 1450
Alexandria, VA 22313-1450
www.uspto.gov

SUGHRUE MION PLLC
2100 PENNSYLVANIA AVENUE, N.W.
WASHINGTON, DC 20037

COPY MAILED
NOV 21 2006
OFFICE OF PETITIONS

In re Patent No. D426,292	:	
Issued: June 6, 2000	:	
Application No. 29/107,935	:	ON PETITION
Filed: July 19, 1999	:	
Attorney Docket No. Q54309	:	

This is a decision on the petition under 37 CFR 1.182, filed November 7, 2006, requesting issuance of a duplicate Letters Patent for the above-identified application.

The petition is **GRANTED**.

The Publishing Division is directed to issue a duplicate Letters Patent.

Petitioner submitted $130.00 towards payment of the petition fee. However, the petition fee is $400.00. Accordingly, an additional $270.00 has been charged to petitioner's deposit account as authorized.

Any questions concerning this matter may be directed to the undersigned at (571) 272-3206. Any questions concerning issuance of the duplicate Letters Patent should be directed to Krystal Paige at (703) 308-9250.

A copy of this decision is being forwarded to Publishing Division for issuance of a duplicate Letters Patent.

Liana Walsh
Petitions Examiner
Office of Petitions

cc: Krystal Paige, P/OPPD, South Tower 8C41 (FAX 571-270-9937)

UNITED STATES PATENT AND TRADEMARK OFFICE

Commissioner for Patents
United States Patent and Trademark Office
P.O. Box 1450
Alexandria, VA 22313-1450
www.uspto.gov

SUGHRUE MION PLLC
2100 PENNSYLVANIA AVENUE, N.W.
WASHINGTON, DC 20037

COPY MAILED
NOV 21 2006
OFFICE OF PETITIONS

In re Patent No. D428,481	:	
Issued: July 18, 2000	:	
Application No. 29/108,534	:	ON PETITION
Filed: July 30, 1999	:	
Attorney Docket No. Q55051	:	

This is a decision on the petition under 37 CFR 1.182, filed November 7, 2006, requesting issuance of a duplicate Letters Patent for the above-identified application.

The petition is **GRANTED**.

The Publishing Division is directed to issue a duplicate Letters Patent.

Petitioner submitted $130.00 towards payment of the petition fee. However, the petition fee is $400.00. Accordingly, an additional $270.00 has been charged to petitioner's deposit account as authorized.

Any questions concerning this matter may be directed to the undersigned at (571) 272-3206. Any questions concerning issuance of the duplicate Letters Patent should be directed to Krystal Paige at (703) 308-9250.

A copy of this decision is being forwarded to Publishing Division for issuance of a duplicate Letters Patent.

Liana Walsh
Petitions Examiner
Office of Petitions

cc: Krystal Paige, P/OPPD, South Tower 8C41 (FAX 571-270-9937)

UNITED STATES
PATENT AND
TRADEMARK OFFICE

FEB 22 2002

UNDER SECRETARY OF COMMERCE FOR INTELLECTUAL PROPERTY AND
DIRECTOR OF THE UNITED STATES PATENT AND TRADEMARK OFFICE
WASHINGTON, D.C. 20231
WWW.USPTO.GOV

#7

JAMES S MACPHERSON
2138 W GRACE
SPOKANE WA 99205

In re Application of
James S. MacPherson et al.
Serial No.: 29/111,798
Filed: October 5, 1999
Attorney Docket No:

: PETITION DECISION

This is a decision on applicants' Petition under 37 CFR 1.137(b), which is being treated as a Petition under 37 CFR 1.137(a) filed November 27, 2000, to revive the above identified abandoned application based on unavoidable circumstances. The delay in responding to this petition is regretted.

A review of the file history shows that the examiner mailed a Notice to Filing Missing Parts of Application, Filing Date Granted on October 25, 1999, setting a two month period to respond and submit an oath or declaration, and a fee. Applicant responded on December 20, 1999, by submitting a new specification and the fee. However, as no declaration was received, the case was abandoned on August 22, 2000.

A petition under 37 CFR 1.137(a), as revised December 1, 1997, requires (1) a petition and petition fee of $55.00 (for a small entity), (2) the proposed response, (3) a terminal disclaimer and disclaimer fee of $55.00 (for a small entity) in any design application, and (4) an adequate showing of the cause of unavoidable delay.

Applicants' reply of the specification on December 20, 1999 is seen as unavoidable, due to an error with the Patent Office web site. Applicant has sense submitted a proper declaration.

However, applicant's petition lacks item (3). A terminal disclaimer is required; a copy of a terminal disclaimer has been included with this decision. Applicant did not need to submit and additional $65.00 for submitting the declaration late; therefore, this will pay for the terminal disclaimer.

Applicants petition under 37 CFR 1.137(a) is **DISMISSED**. Applicant may file a renewed petition under either 37 CFR 1.137(a). Any renewed petition must be filed within TWO MONTHS in order to be considered timely.

Should there be any questions with respect to this decision, please contact Sandra Morris, by mail addressed to: Director, Technology Center 3700/2900, Washington, D.C. 20231, or by telephone at (703) 305-3102 or by facsimile transmission at (703) 305-5679.

John Kittle
Director, Technology Center 3700/2900

UNITED STATES
PATENT AND
TRADEMARK OFFICE

UNDER SECRETARY OF COMMERCE FOR INTELLECTUAL PROPERTY AND
DIRECTOR OF THE UNITED STATES PATENT AND TRADEMARK OFFICE
WASHINGTON, D.C. 20231
WWW.USPTO.GOV

#19

JAMES S MACPHERSON
2138 W GRACE
SPOKANE WA 99205

In re Application of	:
James S. MacPherson et al.	:
Serial No.: 29/111,798	: PETITION DECISION
Filed: October 5, 1999	:
Attorney Docket No.:	:

This is a decision on the renewed petition filed under 37 CFR 1.137(a), filed April 18, 2003, to revive an unintentionally abandoned application.

A review of the file history shows that applicant has satisfied all of the requirements of a petition under 37 CFR 1.137(a) with the filing of the terminal disclaimer.

Applicant's petition is **GRANTED**.

The application will be forwarded to an Examiner for initial examination in due course.

Should there be any questions with respect to this decision, please contact Sandra Morris; by mail addressed to: Director, Technology Center 3700/2900, P.O. Box 1450, Alexandria VA 22313-1450; or by telephone at (703) 305-3102 or by facsimile transmission at (703) 305-5679.

John Kittle
Director, Technology Center 3700/2900

UNITED STATES
PATENT AND
TRADEMARK OFFICE

APR 9 2003

UNDER SECRETARY OF COMMERCE FOR INTELLECTUAL PROPERTY AND
DIRECTOR OF THE UNITED STATES PATENT AND TRADEMARK OFFICE
WASHINGTON, D.C. 20231
WWW.USPTO.GOV

#12

STEVEN G KIBBY
CATERPILLAR INC
PATENT DEPARTMENT AB6490
100 NE ADAMS STREET
PEORIA IL 61629-6490

In re Application of	:
Bruno G. Bauve et al.	:
Serial No.: 29/112,089	: WITHDRAWAL OF ABANDONMENT
Filed: October 8, 1999	:
Attorney Docket No.: 99-307P	:

This is in response to applicants' filing of a Continued Prosecution Application on February 19, 2002, and a Request for Withdrawal of Notice of Abandonment filed on December 18, 2002.

This application was held abandoned by Notice of Abandonment mailed May 17, 2002. A review of the file history shows that the examiner mailed a Final rejection to applicants on September 13, 2001, setting a three month shortened statutory period for response. Applicant responded on January 9, 2002 by submitting new drawings and an extension of time, which did not overcome the Final rejection. An Advisory action was mailed on January 29, 2002, advising applicant of the fact. Applicant responded by filing a request for a Continuation Prosecution Application (CPA) under 37 CFR 1.53(d) and paying the fee therefore, as well as an extension of time. The CPA was unfortunately not immediately matched with the application, and the application was abandoned. In view of the filing of a CPA, the Notice of Abandonment was mailed in error and is hereby rescinded.

Applicants' request is **GRANTED**. The application is restored to a pending status with the mailing of this letter.

The application will be forwarded for processing as a CPA under 37 CFR 1.53(d).

Should there be any questions with regard to this letter please contact Sandra Morris; by letter addressed to the Director, Technology Center 3700/2900, Washington, DC 20231; or by telephone at (703) 305-3102 or by facsimile transmission at (703) 305-5679.

John Kittle
Director, Technology Center 3700/2900

SPE RESPONSE FOR CERTIFICATE OF CORRECTION

Paper No.: _____

DATE : December 7, 2007

TO SPE OF : ART UNIT 2911

SUBJECT : Request for Certificate of Correction on Patent No.: D440344 29/112531

A response is requested with respect to the accompanying request for a certificate of correction.

Please complete this form and return with file, within **7** days to:
Palm location **7580, Certificates of Correction Branch – South Tower – 9A22**
If response is for an IFW, **return to employee (named below) via PUBSCofC Team in MADRAS.**
With respect to the change(s) requested, correcting Office and/or Applicant's errors, should the patent read as shown in the certificate of correction (COCIN)? No new matter should be introduced, nor should the scope or meaning of the claims be changed.

PLEASE FORWARD CASE BACK CERTITICATE OF CORRECTION BRANCH, AS SOON AS POSSIBLE!!!

Eva James

Thank You For Your Assistance

Certificates of Correction Branch
Tel. No. 703-308-9390 ext. 124

The request for issuing the above-identified correction(s) is hereby:
Note your decision on the appropriate box.

- ☑ **Approved** — **All** changes apply.
- ☐ **Approved in Part** — Specify below which changes **do not** apply.
- ☐ **Denied** — State the reasons for denial below.

Comments:

CATHRON C. BROOKS
SUPERVISORY PATENT EXAMINER

SPE

2911
Art Unit

UNITED STATES
PATENT AND
TRADEMARK OFFICE

JUL 29 2002

UNDER SECRETARY OF COMMERCE FOR INTELLECTUAL PROPERTY AND
DIRECTOR OF THE UNITED STATES PATENT AND TRADEMARK OFFICE
WASHINGTON, D.C. 20231
WWW.USPTO.GOV

#5

GREGORY SMITH & ASSOCIATES
3900 NEWPARK MALL ROAD, SUITE 317
NEWARK CA 94560

In re Application of	:
Jessie Li-Kuo Wang	:
Serial No.: 29/113,082	: PETITION DECISION
Filed: November 1, 1999	:
Attorney Docket No.: 185-003	:

This is a decision on applicants Petition to Revive under 37 CFR 1.137(a), filed April 13, 2001, and then faxed on July 11, 2002, to revive the above identified abandoned application based on unavoidable circumstances. The delay in acting upon this petition is regretted; however, as applicant's petition was labeled with an incorrect serial number, the papers and fee were not matched with the correct application. Applicant is advised that the serial number for this application is 29/113,082.

A review of the file history shows that the Office mailed an Office action to applicant on May 9, 2000, giving a two month shortened statutory period of time to respond. As no response was received by July 10, 2000, the application was abandoned. This petition followed.

A petition under 37 CFR 1.137(a), as revised December 1, 1997, requires (1) a petition and petition fee of $55.00 (for a small entity), (2) the proposed response, (3) a terminal disclaimer and disclaimer fee of $55.00 (for a small entity) in any design application, and (4) an adequate showing of the cause of unavoidable delay. Applicant's petition lacks item (3). For all design applications, a terminal disclaimer and fee must be filed (37 CFR 1.137(c)).

Applicants petition under 37 CFR 1.137(a) is **DISMISSED**. Applicant may file a renewed petition; any renewed petition must be filed within **TWO MONTHS** in order to be considered timely.

Should there be any questions with respect to this decision, please contact Sandra Morris, by mail addressed to: Director, Technology Center 3700/2900, Washington, D.C. 20231, or by telephone at (703) 305-3102 or by facsimile transmission at (703) 305-5679.

John Kittle
Director, Technology Center 3700/2900

UNITED STATES
PATENT AND
TRADEMARK OFFICE

JUN 11 2003

UNDER SECRETARY OF COMMERCE FOR INTELLECTUAL PROPERTY AND
DIRECTOR OF THE UNITED STATES PATENT AND TRADEMARK OFFICE
WASHINGTON, D.C. 20231
WWW.USPTO.GOV

#7

GREGORY SMITH & ASSOCIATES
3900 NEWPARK MALL ROAD, SUITE 317
NEWARK CA 94560

In re Application of	:
Jessie Li-Kuo Wang	:
Serial No.: 29/113,082	: PETITION DECISION
Filed: November 1, 1999	:
Attorney Docket No.: 185-003	:

This is a decision on the renewed Petition under 37 CFR 1.137(a), submitted by facsimile on August 22, 2002 to revive the above identified abandoned application based on unavoidable circumstances. The delay in acting upon this petition is regretted.

A review of the file history shows that applicant has now satisfied all of the requirements of a petition under 37 CFR 1.137(a).

Applicants' petition is **GRANTED**.

The terminal disclaimer fee of $55.00 will be charged to applicant's credit card account, as directed.

The application will be forwarded to the Examiner for consideration of applicant's response.

Should there be any questions with respect to this decision, please contact Sandra Morris, by mail addressed to: Director, Technology Center 3700/2900, Washington, D.C. 20231, or by telephone at (703) 305-3102 or by facsimile transmission at (703) 305-5679.

John Kittle
Director, Technology Center 3700/2900

UNITED STATES PATENT AND TRADEMARK OFFICE

Commissioner for Patents
United States Patent and Trademark Office
P.O. Box 1450
Alexandria, VA 22313-1450
www.uspto.gov

Paper No. 14

OBLON, SPIVAK, MCCLELLAND, MAIER & NEUSTADT, P.C.
1940 DUKE STREET
ALEXANDRIA VA 22314

COPY MAILED

JUN 1 6 2004

OFFICE OF PETITIONS

In re Application of
Chou et al.
Application No. 09/170,083
Filed: 13 October, 1998
Attorney's Docket No. 0083-0081-0X

DECISION ON PETITION

This is a decision on the petition filed May 19, 2004, under 37 CFR 1.181, to invoke the supervisory authority of the commissioner for matters not otherwise provided for.

The petition is **DISMISSED** as involving moot issues.

Petitioners state that a copy of a Notice to Appeal, Appeal Brief and one month extension of time request were filed June 20, 2002, in response to a Final Office Action mailed February 20, 2002.

A review of the Official file reveals that in fact, those documents, Notice to Appeal, Appeal Brief and one month extension of time request (paper 11), were timely filed and have been docketed as a part of the file.

No petition fee is due for the instant petition and none has been charged. The application file will be forwarded to Technology Center 2914 for a review of the Notice of Appeal and the Appeal Brief filed June 20, 2002 and for the rendering of an Examiner's answer in response thereof.

Telephone inquiries concerning this matter may be directed to the undersigned Petitions Attorney at (703) 305-4497.

Patricia Faison-Ball

Patricia Faison-Ball
Senior Petitions Attorney
Office of Petitions

UNITED STATES PATENT AND TRADEMARK OFFICE

Commissioner for Patents
United States Patent and Trademark Office
P.O. Box 1450
Alexandria, VA 22313-1450
www.uspto.gov

Paper No. 15

OBLON, SPIVAK, MCCLELLAND, MAIER & NEUSTADT, P.C.
1940 DUKE STREET
ALEXANDRIA VA 22314

COPY MAILED

JUN 2 9 2004

OFFICE OF PETITIONS

In re Application of
Steven George Kieffer
Application No. 29/113,106
Filed: November 1, 1999
Attorney Docket No. 10550-0002-1

DECISION ON PETITION

CORRECTED DECISON[1]

This is a decision on the petition filed May 19, 2004, under 37 CFR 1.181, to invoke the supervisory authority of the commissioner for matters not otherwise provided for.

The petition is **DISMISSED** as involving moot issues.

Petitioners state that a copy of a Notice to Appeal, Appeal Brief and one month extension of time request were filed June 20, 2002, in response to a Final Office Action mailed February 20, 2002.

A review of the Official file reveals that in fact, those documents, Notice to Appeal, Appeal Brief and one month extension of time request (paper 11), were timely filed and have been docketed as a part of the file.

No petition fee is due for the instant petition and none has been charged. The application file will be forwarded to Technology Center 2914 for a review of the Notice of Appeal and the Appeal Brief filed June 20, 2002 and for the rendering of an Examiner's answer in response thereof.

Telephone inquiries concerning this matter may be directed to the undersigned Petitions Attorney at (703) 305-4497.

Patricia Faison-Ball
Senior Petitions Attorney
Office of Petitions

[1]A decision mailed June 16, 2004 incorrectly identified the application number, inventor, date the application was filed and the attorney docket number. This is a corrected decision.

UNITED STATES PATENT AND TRADEMARK OFFICE

Commissioner for Patents
United States Patent and Trademark Office
P.O. Box 1450
Alexandria, VA 22313-1450
www.uspto.go

STEPHEN E FELDMAN PC
12 EAST 41ST STREET
NEW YORK, NY 10017

In re Application of	
Danny S. Lai	:
Serial No.: 29/114,325	:
Filed: November 23, 1999	: PETITION DECISION
Attorney Docket No.:	:
	:

This is a decision on applicant's letter submitted January 12, 2004, and again on March 31, 2004, which is being treated as a Petition for Withdrawal of Notice of Abandonment under 37 CFR 1.181, to revive an unavoidably abandoned application. The delay in acting upon this petition is regretted.

This application became abandoned for failure to respond to the Office action mailed March 19, 2003, which set a three-month shortened statutory period to respond. As no response was received by June 19, 2003, a Notice of Abandonment was mailed December 31, 2003. Applicant then filed this petition.

Applicant has submitted that the response and extension of time were timely filed on July 17, 2003, and has submitted copies of the response with a Certificate of Mailing and a Post Card receipt that show that the response was timely filed. As applicant inadvertently labeled the response with the incorrect serial number, the response was never associated with the application. However, as applicant did timely respond, the application will be returned to pending status.

Applicant's petition is **GRANTED.**

The application will be promptly forwarded to the Examiner for evaluation of applicant's response in due course.

Should there be any questions with respect to this decision, please contact Sandra Morris; by mail addressed to: Director, Technology Center 3700/2900, P.O. Box 1450, Alexandria, VA 22313-1450; or by telephone at (571) 272-2622.

John Kittle
Director, Technology Center 3700/2900

Best Available Copy

UNITED STATES PATENT AND TRADEMARK OFFICE

Commissioner for Patents
United States Patent and Trademark Office
P.O. Box 1450
Alexandria, VA 22313-1450
www.uspto.gov

Date : March 2, 2007

Patent No. : D,534,095 S
Inventor(s) : Lai
Application No. : 29/114325
Issued : Dec. 26, 2006
Title : **JEWELRY SETTING**
Docket No. :

Re: Request for Certificate of Correction

Consideration has been given your request for the issuance of a certificate of correction for the above-identified patent under the provisions of 37 CFR 1.322 and/or 1.323.

Assignees' names and addresses (assignment data) printed in a patent are based *solely* on information supplied in the appropriate space for identifying the assignment data, i.e., item 3 of the Fee(s) Transmittal Form PTOL-85B. After payment of the issue fee, correction of assignment data submitted on the PTOL-85B can only be done by Certificate of Correction under 37 CFR 1.323, with a request under 37 CFR 3.81(b).

A request for a patent to be corrected to state the name of the assignee must:

A. state that the assignment was submitted for recordation as set forth in 37 CFR 3.11 before issuance of the patent;
B. include a request for a certificate of correction under 37 CFR 1.323 along with the fee set forth in 37 CFR 1.20(a); and
C. include the processing fee set forth in 37 CFR 1.17(i).

If the request is granted, Certificates of Correction Branch will be notified that a Certificate of Correction may be issued.

See Manual of Patent Examining Procedure, Section 1481.01 (Rev. 3) (Oct. 2005).

Applicant has not included items A and or C above, accordingly, the request for Certificate of Correction to add or change the assignee data is denied.

Any request under 37 CFR 3.81(b) should be directed to the following address or facsimile number:

By mail:	Mail Stop PETITIONS Commissioner for Patents Post Office Box 1450 Alexandria, VA 22313-1450
By hand:	Customer Service Window Mail Stop Petitions Randolph Building 401 Dulany Street Alexandria, VA 22314
By fax:	571-273-8300 ATTN: Office of Petitions

If a fee (currently $100) was previously submitted for consideration of a Request for Certificate of Correction, under CFR 1.323, to correct assignment data, no additional fee is required.

Elisha Evans
For Cecelia Newman
Decisions & Certificates
of Correction Branch
(703) 308-9390 ext. 110

STEPHEN E FELDMAN PC
12 EAST 41ST STREET
NEW YORK NY 10017

CBN/eme

UNITED STATES
PATENT AND
TRADEMARK OFFICE

JAN 17 2003

UNDER SECRETARY OF COMMERCE FOR INTELLECTUAL PROPERTY AND

DIRECTOR OF THE UNITED STATES PATENT AND TRADEMARK OFFICE
WASHINGTON, D.C. 20231
WWW.USPTO.GOV

#22

REGINA ANN LOUGHRAN
201 W. 70TH STREET, APT. 9A
NEW YORK NY 10023

In re Application of	:
David Rowland et al.	:
Serial No.: 29/114,468	: PETITION DECISION
Filed: November 23, 1999	:
Attorney Docket No.: UD-051363-9	:

This is a decision on the petition under 37 CFR 1.137(b), filed on November 13, 2002, to revive an unintentionally abandoned application.

This application became abandoned for failure to overcome the Final Rejection, mailed February 27, 2002, which set a three month shortened statutory period to respond. Applicant submitted a response on May 28, 2002; however, an Advisory Action was mailed September 18, 2002, as the response did not overcome the Final rejection. Applicant then filed this petition.

A review of the file history shows that applicant has satisfied all of the requirements of a petition under 37 CFR 1.137(b).

Applicants' petition is **GRANTED**.

Applicants' Appeal Brief is due TWO MONTHS from the date of mailing of this decision. Extensions of time may be requested under 37 CFR 1.136(a).

Should there be any questions with respect to this decision, please contact Sandra Morris, by mail addressed to: Director, Technology Center 3700/2900, Washington, D.C. 20231, or by telephone at (703) 305-3102 or by facsimile transmission at (703) 305-5679.

John Kittle
Director, Technology Center 3700/2900

UNITED STATES PATENT AND TRADEMARK OFFICE

COMMISSIONER FOR PATENTS
UNITED STATES PATENT AND TRADEMARK OFFICE
WASHINGTON, D.C. 20231
www.uspto.gov

Paper No. 22

BURNS DOANE SWECKER & MATHIS LLP
POST OFFICE BOX 1404
ALEXANDRIA, VA 22313-1404

COPY MAILED

DEC 27 2002

OFFICE OF PETITIONS

In re Application of	:	
Bas Ording	:	
Application No. 29/116,433	:	ON PETITION
Filed: January 4, 2000	:	
Attorney Docket No. 001580-536	:	

This is a decision on the petition under 37 CFR 1.313(c)(3), filed December 26, 2002, to withdraw the above-identified application from issue after payment of the issue fee.

The petition is **GRANTED**.

The above-identified application is hereby withdrawn from issue in favor of a continued prosecution application (CPA) under 37 CFR 1.53(d).

Petitioner is advised that the issue fee paid on October 8, 2002 in the parent application is not refundable nor can it be applied towards any new Notice of Allowance which may issue on the CPA filed December 26, 2002.

Telephone inquiries should be directed to the undersigned at (703) 305-8680.

The application is being forwarded to Technology Center AU 2911 for processing of the CPA.

Frances Hicks

Frances Hicks
Petitions Examiner
Office of Petitions
Office of the Deputy Commissioner
for Patent Examination Policy

UNITED STATES
PATENT AND
TRADEMARK OFFICE

#8

UNDER SECRETARY OF COMMERCE FOR INTELLECTUAL PROPERTY AND
DIRECTOR OF THE UNITED STATES PATENT AND TRADEMARK OFFICE
WASHINGTON, D.C. 20231
WWW.USPTO.GOV

FEB 9 2002

DAVID A UNDERWOOD
ANISSIMOFF & ASSOCIAES
235 NORTH CENTRE ROAD
SUITE 201
LONDON ON N5X 4E7 CA CANADA

In re Application of	:
David Underwood	:
Serial No.: 29/117,401	: PETITION DECISION
Filed: January 24, 2000	:
Attorney Docket No.: 7501	:

This is a decision on the Petition under 37 CFR 1.137(a), filed September 26, 2001, to revive the above identified abandoned application based on unavoidable circumstances.

A review of the file history shows that the examiner mailed an Office action to applicant October 23, 2000, setting a three month statutory period for response. Applicant responded with an Extension of time on February 22, 2001; however, the response was filed by an attorney not on the Roster of Attorneys registered to practice before the USPTO. Therefore, a Notice of Abandonment was mailed on July 18, 2001.

A petition under 37 CFR 1.137(a), as revised December 1, 1997, requires (1) a petition and petition fee of $55.00 (for a small entity), (2) the proposed response or Issue Fee, (3) a terminal disclaimer and disclaimer fee of $55.00 (for a small entity) in any design application, and (4) an adequate showing of the cause of unavoidable delay.

Attorney Joseph Day has submitted an affidavit, stating that he was unaware that he had been removed from the Roster, and has submitted proof that he has been reinstated. Therefore, applicant has shown that the delay in payment of the issue fee was unavoidable.

Applicant's petition under 37 CFR 1.137(a) is **GRANTED**.

The application will be forwarded to the Examiner for further examination of applicant's response.

Should there be any questions with respect to this decision, please contact Sandra Morris, by mail addressed to: Director, Technology Center 3700/2900, Washington, D.C. 20231, or by telephone

at (703) 305-3102 or by facsimile transmission at (703) 305-5679.

John Kittle
Director, Technology Center 3700/2900

UNITED STATES
PATENT AND
TRADEMARK OFFICE

UNDER SECRETARY OF COMMERCE FOR INTELLECTUAL PROPERTY AND
DIRECTOR OF THE UNITED STATES PATENT AND TRADEMARK OFFICE
WASHINGTON, D.C. 20231
WWW.USPTO.GOV

#8

EZRA SUTTON PA
PLAZA 9, 900 ROUTE 9
WOODBRIDGE, NJ 07095

In re Application of	:
Charles Mizrahi	:
Serial No.: 29/117,514	: WITHDRAWAL OF ABANDONMENT
Filed: January 24, 2000	:
Attorney Docket No.: 3.1-002	:

This is in response to applicant's Petition to Revive under 37 CFR 1.181, filed August 15, 2003.

A review of the file history shows that the Office mailed an Office action to applicant on August 14, 2001, setting a two month shortened statutory period for response. As no response was received by October 15, 2001, a Notice of Abandonment was mailed April 23, 2002. This petition followed.

Applicant has submitted a declaration from the person who mailed the response, as well as a copy of the response, which includes a Certificate of Mailing date of October 15, 2001. It is therefore concluded that the response was timely submitted, and the abandonment of the application was in error.

Applicant's request is **GRANTED**. The application is restored to a pending status with the mailing of this letter.

The application will be forwarded to the Examiner for consideration of applicant's response.

Should there be any questions with regard to this letter please contact Sandra Morris; by letter addressed to the Director, Technology Center 3700/2900, P.O. Box 1450, Alexandria VA 22313-1450; or by telephone at (703) 305-3102 or by facsimile transmission at (703) 305-5679.

John Kittle
Director, Technology Center 3700/2900

UNITED STATES PATENT AND TRADEMARK OFFICE

Commissioner for Patents
United States Patent and Trademark Office
P.O. Box 1450
Alexandria, VA 22313-1450
www.uspto.gov

Date Mailed : 9-7-06

Patent No.: D 451,132
Patent Issued : November 27, 2001
Inventor(s) : Leonard M. Fernandes
Title: PORTION OF A BOOK WITH TAMBOURINE IMPLANTED THEREIN
Docket No.: 800-094-16

Re: Request for Certificate of Correction

Consideration has been given your request for the issuance of a certificate of correction for the above-identified patent under the provisions of Rule 1.322.

The alleged errors to your request is what is printed on the patent is correct. The examiner amended the specification so the title would be consistent and corrected the figure descriptions to make them proper.

In view of the foregoing, your request is hereby denied. However, further consideration will be given upon receipt of a request for reconsideration directed to Decisions & Certificates of Correction Branch.

Eva James
For Cecelia B. Newman
Certificate of Correction Branch
(703) 308-9390 ext. 124 or ext. 102

K. Bradford Adolphson
Ware, Fressola, Van der Sluys & Adolphson LLP
755 Main Street
P.O. box 224
Monroe, CT 06468

ej

UNITED STATES PATENT AND TRADEMARK OFFICE

Commissioner for Patents
United States Patent and Trademark Office
P.O. Box 1450
Alexandria, VA 22313-1450
www.uspto.gov

MORRISS O'BRYANT COMPAGNI, P.C.
136 SOUTH MAIN STREET
SUITE 700
SALT LAKE CITY, UT 84101

COPY MAILED

NOV 19 2004

OFFICE OF PETITIONS

In re Application of	:	
Abbas Ben Afshari	:	DECISION GRANTING
Application No. 29/119,574	:	PETITION
Filed: May 3, 2004	:	
Attorney Docket No. 2912.VBG.DS	:	

This is a decision on the papers styled, "Petition For Application Never Received," which has been treated as a petition under 37 CFR 1.10(e), filed October 25, 2004.

Please note, the papers submitted October 25, 2004, have been assigned application number 29/119,574. Please direct all future correspondence to this application number.

Petitioners allege that the application was deposited in Express Mail service on May 3, 2004. In support, the petition is accompanied by a copy of Express Mail Receipt No. EV478758050US (the same Express Mail number found on the original application papers located in the official file) showing a "date in" of May 3, 2004. Petitioner requests that the application be accorded a filing date of May 3, 2004.

The Office considers the date the paper or fee is shown to have been deposited as "Express Mail" to be the "Date In" on the Express Mail label, MPEP 515. That is the date that verifies that the package was actually mailed. In view of the above, the evidence is convincing that the application was deposited as "Express Mail" with the US Postal Service on May 3, 2004.

The petition is **GRANTED**.

Accordingly, the application is entitled to a filing date of May 3, 2004.

Since the instant petition has been granted, no petition fee is required.

The application is being returned to the Office of Initial Patent Examination for processing with a filing date of May 3, 2004 and issuance of a filing receipt.

Telephone inquiries concerning this matter may be directed to the undersigned at (571)272-3228.

Edward J. Tannouse
Petitions Attorney
Office of Petitions
United States Patent and Trademark Office

UNITED STATES
PATENT AND
TRADEMARK OFFICE

UNDER SECRETARY OF COMMERCE FOR INTELLECTUAL PROPERTY AND
DIRECTOR OF THE UNITED STATES PATENT AND TRADEMARK OFFICE
WASHINGTON, D.C. 20231
WWW.USPTO.GOV

#5

FITCH EVEN TABIN AND FLANNERY
120 SOUTH LA SALLE STREET
SUITE 1600
CHICAGO IL 60603-3406

In re Application of	:
Daniel Eugene Doucette et al.	:
Serial No.: 29/122,029	: WITHDRAWAL OF ABANDONMENT
Filed: April 18, 2000	:
Attorney Docket No.: 68174	:

This is in response to applicants' Petition under 37 CFR 1.181, filed December 5, 2001, and faxed again on May 16, 2002, based on having completely responded to the Notice to File Missing Parts of Application. The delay in acting upon this petition is regretted.

A review of the file history shows that the Office mailed the Notice to File Missing Parts of Application to applicant on May 18, 2000, setting a two month statutory period for response, to submit a signed Declaration, Filing fee, and surcharge for a total of $440.00. As no response was received, a Notice of Abandonment was mailed April 4, 2002.

Applicant has submitted docket records, which show that applicant did not receive the Notice. In view of this it is concluded that applicant never received the Notice to Filing Missing Parts.

Applicants' request is **GRANTED**. The application is restored to a pending status with the mailing of this letter.

The application will be forwarded to an Examiner after initial processing of the application.

Should there be any questions with regard to this letter please contact Sandra Morris, by letter addressed to the Director, Technology Center 3700/2900, Washington, DC 20231, or by telephone at (703) 305-3102 or by facsimile transmission at (703) 305-5679.

John Kittle
Director, Technology Center 3700/2900

UNITED STATES PATENT AND TRADEMARK OFFICE

COMMISSIONER FOR PATENTS
UNITED STATES PATENT AND TRADEMARK OFFICE
P.O. BOX 1450
ALEXANDRIA, VA 22313-1450
www.uspto.gov
DIW 06-03

Paper No. 14

PEARSON & PEARSON
JOHN H PEARSON JR
10 GEORGE STREET
LOWELL MA 01852

COPY MAILED

JUN 0 4 2003

OFFICE OF PETITIONS

In re Application of	:	
Yoshirou Hoshino	:	
Application No. 29/122,773	:	DECISION DISMISSING PETITION
Filed: 12 June, 2000	:	
Attorney Docket No. 32376	:	

This is a decision on the petition filed on 23 October, 2002, requesting that the above-identified application be accorded a filing date of 3 May, 2000 with one claim as a part of the original disclosure.

The petition is **DISMISSED.**

The application was deposited 3 May, 2000. On 2 June, 2000, Initial Patent Examination Division mailed a Notice to File Missing Parts of Nonprovisional Application, stating that the oath or declaration and a surcharge for its late filing was required. The declaration and surcharge for its late filing were filed on 12 June, 2000. Petitioner states that the Examiner informed counsel by telephone on 16 August, 2001, that the application did not include at least one claim, and that the filing date would be the date a claim was received. On 7 September, 2001, petitioner filed a reply including one claim.[1]

In the present petition, petitioner asserts that the application as filed is entitled to a filing date of 3 May, 2000, because the application claims priority to two Japanese applications filed prior to 3 May, 2000.

The arguments have been considered, but are not persuasive. The U.S. Patent and Trademark Office (Office) file is the official

[1]Although the reply containing the claim was filed on 7 September, 2001, a review of Office PALM records reveals that the application was inadvertantly accorded a filing date of 24 August, 2001.

record of the papers originally filed in this application. A review of the papers originally filed reveals that no claim was filed on 3 May, 2000. An applicant alleging that a paper was filed in the Office and later misplaced has the burden of proving the allegation by a preponderance of the evidence.
Where the records of the Office (e.g. the file of the application) contain any document(s) or fee(s) corresponding to the contents of the correspondence at issue, the Office will rely upon its official record of the contents of such correspondence in the absence of convincing evidence (e.g. a postcard receipt under MPEP 503 containing specific itemization of the document(s) or fee(s) purported to have been filed with the correspondence at issue) that the Office received and misplaced any document(s) or fee(s) that is not among the official records of the Office. If a new application is being filed, all parts of the application being submitted should be separately listed on the postcard, *e.g.,* the number of pages of specification (including written description, claims and abstract) number of claims, number of sheets of drawings, number of pages of oath/declaration. The postcard receipt will not serve as *prima facie* evidence of receipt of any item which is not adequately itemized on the postcard.[2]

At the outset, it is noted that had petitioner utilized an itemized return postcard in accordance with Section 503 of the Manual of Patent Examining Procedure (MPEP), petitioner could have avoided the predicament that has now occurred. A postcard receipt which itemizes and properly identifies the items which are being filed serves as *prima facie* evidence of receipt in the USPTO of all of the items listed thereon on the date stamped thereon by the USPTO. Where the records of the Office (e.g. the file of the application) contain any document(s) or fee(s) corresponding to the contents of the correspondence at issue, the Office will rely upon its official record of the contents of such correspondence in the absence of convincing evidence (e.g. a postcard receipt under MPEP 503 containing specific itemization of the document(s) or fee(s) purported to have been filed with the correspondence at issue) that the Office received and misplaced any document(s) or fee(s) that is not among the official records of the Office. If a new application is being filed, all parts of the application being submitted should be separately listed on the postcard (e.g. the number of pages of specification (including written description, claims and abstract) number of claims, number of sheets of drawings, number

[2] MPEP 503.

of pages of oath/declaration. The postcard receipt will not serve as *prima facie* evidence of receipt of any item which is not adequately itemized on the postcard.[3]

Further, petitioners' assertion that this application claims priority to an earlier-filed foreign application is not persuasive. A review of the record reveals that no claim was received on 3 May, 2000. Clearly a claim, was intended to be a part of this application. Whether the claim was a part of a copending application is not an issue here since the copending application was not specifically incorporated by reference into the disclosure of this application.[4] The mere reference to another application is not an incorporation of anything therein into the application containing the reference.[5] To allow one to retroactively incorporate by reference a second application into a first application would allow the addition of matter into an application that was not present on filing which would be contrary to our statutes and rules. Still further, the question of new matter is not an issue here. A claims was simply not filed in the present application in the USPTO on 3 May, 2000. It is further noted that copies of the foreign priority documents were not filed in the USPTO until 26 June, 2000.

With regards to petitioner's claim that he relied on the Filing Receipt and the Notice to File Missing Parts in not stating that the application did not include a claim, the Office regrets the delay. However, although the USPTO attempts to notify parties as to defective papers in order to permit timely refiling, it has no obligation to do so.[6] Rather, it is the applicants who are ultimately responsible for filing proper documents.[7]

The requirement for a claim in a design application is a requirement of the statute. Section 171 of title 35 of the United States Code makes § 112 applicable to design applications. Section 112 requires that the " specification shall conclude with one or more claims particularly pointing out and distinctly

---

[3] MPEP 503.

[4] See MPEP 608.01(p).

[5] See In re de Seversky, 177 USPQ 144, 146 (C.C.P.A. 1973); Dart Industries v. Banner, 207 USPQ 273, 276 (D.C. Cir. 1980).

[6] See In re Colombo Inc., 33 USPQ2d 1530, 1532. (Comm'r Pat. 1994).

[7] Id.

claiming the subject matter which the applicant regards as his invention." Thus, the requirement for a claim in a design application is not *pro forma*, but is a necessary part of a complete design application.

However, the form of a claim in a design application s fixed by rule, and in that way, is different from the claims of other applications. Section 1.153 specifically provides that:

> The title of the design must designate the particular article. No description, other than a reference to the drawing, is ordinarily required. The claim shall be in formal terms to the ornamental design for the article (specifying name) as shown, or as shown and described. More than one claim is neither required nor permitted.

A review of the record reveals that the papers filed on 3 May, 2000, omitted both the language "we claim" and "an ornamental design for". The application as filed did not conclude with a formal claim.

However, on 12 June, 2000, petitioners filed a declaration stating that the inventor believed himself to be

> the original, first and sole inventor of the subject matter which is claimed and for which a patent is sought on the invention entitled: High-Frequency Signal Distributor

Since this is a <u>design</u> application, this language in the declaration can be construed as the claim required by 35 U.S.C. § 112, second paragraph, insofar as this application is concerned. Accordingly, since this is a <u>design</u> application and since the claim language quoted above does appear at the conclusion or end of the specification, there is no statutory prohibition against construing this language as the claim required by statute. It is also clear that there has been, and is, no doubt as to the form of, and what is to be claimed herein since this a <u>design</u> application for which the form of the claim is set by 37 CFR 1.153. Under the circumstances, it is appropriate that the language from the declaration be construed as the claim for filing date purposes and applicant be allowed to amend the application under § 1.182.

Accordingly, the petition is DISMISSED to the extent that the application is entitled to a filing date of 3 May, 2000. A petition fee of $130.00 is due and will be charged to counsel's

deposit account, No. 16-0875 as authorized in the petition, as the petition was necessitated by an error on the part of the petitioner. Moreover, consideration of a preliminary amendment is required to correct the error. The application is entitled to a filing date of 12 June, 2000, and consideration of such a preliminary amendment.

The amendment filed on 7 September, 2001 will be entered in due course (if it has not been already). It must be considered by the examiner for entry of new matter not described in the application filed on 12 June, 2000.[8]

The application is being forwarded to the Office of Initial Patent Examination for further processing as a design application with a filing date of 12 June, 2000, using the application papers filed on 12 June, 2000. Thereafter, the application will be forwarded to Technology Center 2911 for further processing.

Telephone inquiries concerning this matter may be directed to the undersigned at (703)308-6918.

DIWood

Douglas I. Wood
Senior Petitions Attorney
Office of Petitions

[8] 35 U.S.C. § 112, first paragraph; 35 U.S.C. § 132. The issue of the filing date to be accorded this application came before the Office of Petitions after a first Office action had been mailed.

UNITED STATES PATENT AND TRADEMARK OFFICE

COMMISSIONER FOR PATENTS
UNITED STATES PATENT AND TRADEMARK OFFICE
P.O. BOX 1450
ALEXANDRIA, VA 22313-1450
www.uspto.gov

Paper No. 19

PEARSON & PEARSON
JOHN H PEARSON JR
10 GEORGE STREET
LOWELL MA 01852

COPY MAILED

DEC 2 4 2003

OFFICE OF PETITIONS

In re Application of	:
Yoshirou Hoshino	: DECISION DISMISSING PETITION
Application No. 29/122,773	: AS MOOT
Filed: 12 June, 2000	:
Attorney Docket No. 32376	:

This is a decision on the renewed petition under 37 CFR 1.182, filed on 14 November, 2003, requesting that the application be accorded a filing date of 12 June, 2000, and requesting entry of the amendment filed on 14 November, 2003.

The petition is **DISMISSED AS MOOT.**

The application was deposited 3 May, 2000. On 2 June, 2000, Initial Patent Examination Division mailed a Notice to File Missing Parts of Nonprovisional Application, stating that the oath or declaration and a surcharge for its late filing was required. The declaration and surcharge for its late filing were filed on 12 June, 2000. Petitioner states that the Examiner informed counsel by telephone on 16 August, 2001, that the application did not include at least one claim, and that the filing date would be the date a claim was received. On 7 September, 2001, petitioner filed a reply including one claim.[1] The petition filed on 23 October, 2002, was dismissed on 4 June, 2003, and the application was accorded a filing date of 12 June, 2000.

Petitioner now requests consideration of the preliminary amendment filed on 14 November, 2003, and that the application be accorded a filing date of 12 June, 2000.

---

[1]Although the reply containing the claim was filed on 7 September, 2001, a review of Office PALM records reveals that the application was inadvertently accorded a filing date of 24 August, 2001.

The filing date of 12 June, 2000, was previously granted in the decision mailed on 4 June, 2003, and no petition is necessary for consideration of the preliminary amendment filed on 14 November, 2003. Therefore the petition is dismissed as involving a moot issue.

It is noted, however, that the filing date has not yet been corrected in Office PALM records. Therefore, the application is being forwarded to the Office of Initial Patent Examination for correction of the filing date to 12 June, 2000, and issuance of a corrected filing receipt. Thereafter, the application will be forwarded to Technology Center 2900 for consideration for the amendment filed on 14 November, 2003.

The petition fee of $130.00 will be credited to counsel's deposit account, No. 16-0875.

The application is being forwarded to the Office of Initial Patent Examination for correction of the filing date to 12 June, 2000, using the application papers filed on that date, and for issuance of a corrected Filing Receipt.

Telephone inquiries concerning this matter may be directed to the undersigned at (703)308-6918.

D Wood

Douglas I. Wood
Senior Petitions Attorney
Office of Petitions

UNITED STATES PATENT AND TRADEMARK OFFICE

UNITED STATES DEPARTMENT OF COMMERCE
United States Patent and Trademark Office
Address: COMMISSIONER FOR PATENTS
P.O. Box 1450
Alexandria, Virginia 22313-1450
www.uspto.gov

APPLICATION NO.	FILING DATE	FIRST NAMED INVENTOR	ATTORNEY DOCKET NO.	CONFIRMATION NO.
29/122,988	05/09/2000	Michael Redwood	20004.0012	3856

23517 7590 09/12/2003

SWIDLER BERLIN SHEREFF FRIEDMAN, LLP
3000 K STREET, NW
BOX IP
WASHINGTON, DC 20007

EXAMINER

ART UNIT	PAPER NUMBER
2900	9

DATE MAILED: 09/12/2003

Please find below and/or attached an Office communication concerning this application or proceeding.

UNITED STATES PATENT AND TRADEMARK OFFICE

COMMISSIONER FOR PATENTS
UNITED STATES PATENT AND TRADEMARK OFFICE
WASHINGTON, D.C. 20231
www.uspto.gov

JOHN P. MULGREW
SWIDLER BERLIN SHEREFF FRIEDMAN, LLP
3000 K STREET, NW, SUITE 300
WASHINGTON, D.C. 20007

In re Application of	:	
Michael Redwood et al.	:	
Application No. 29/122,988	:	PETITION DECISION
Filed: May 9, 2000	:	
Attorney Docket No. 20004.0012	:	

This is a decision on the petition under 37 CFR 1.181 received April 19, 2002, to withdraw holding of abandonment. The delay in deciding this petition is regretted.

The petition is **GRANTED**.

A review of the application file reveals that a notice to file missing parts of nonprovisional application was mailed on June 2, 2000 setting a two month time period for response. Upon failure to submit a signed oath or declaration and the required surcharge of $130 within the time period specified or the extension of time period ending January 2, 2001, the case was abandoned. This petition followed.

Petitioner has provided evidence in the form of a copy of a stamped postcard having a received date at the Patent & Trademark Office of August 2, 2002. The postcard indicates that the papers being submitted are a response to the notice to file missing parts and a copy of the notice along with an executed declaration and fee by deposit account. Copies of these papers accompany this petition. It's noted that the serial number identified on the copy of the postcard and the response paper does not correspond to that of the present application. However, the serial number identified in the signed declaration does correspond to this application. Therefore, since the correct serial number was identified in at least one of the papers submitted, the response to the notice to file missing parts is considered timely filed.

Accordingly, the application is not abandoned in fact because a response was received within the time period set. The Notice of Abandonment is hereby vacated and the holding of abandonment withdrawn.

The surcharge fee of $130 required in the notice to file missing parts has been charged to Deposit Account No. 195127 since it had not been previously collected.

The application will be forwarded for processing as a new application in due course.

Should there be any questions with regard to this letter please contact James Gandy, by letter addressed to the Director, Technology Center 3700/2900, P.O. Box 1450 Alexandria, VA 22313-1450, or by telephone at (703) 305-3264.

John Kittle
Director, Technology Center 3700/2900

UNITED STATES PATENT AND TRADEMARK OFFICE

UNITED STATES DEPARTMENT OF COMMERCE
United States Patent and Trademark Office
Address: COMMISSIONER OF PATENTS AND TRADEMARKS
Washington, D.C. 20231
www.uspto.gov

APPLICATION NO.	FILING DATE	FIRST NAMED INVENTOR	ATTORNEY DOCKET NO.	CONFIRMATION NO.
29/123,319	05/15/2000	Wayne Cohen	A33211-072708.0154	2936

21003 7590 10/10/2002

BAKER & BOTTS
30 ROCKEFELLER PLAZA
NEW YORK, NY 10112

EXAMINER
SEIFERT, RALF T

ART UNIT	PAPER NUMBER
2914	13

DATE MAILED: 10/10/2002

Please find below and/or attached an Office communication concerning this application or proceeding.

TO-90C (Rev. 07-01)

UNITED STATES
PATENT AND
TRADEMARK OFFICE

UNDER SECRETARY OF COMMERCE FOR INTELLECTUAL PROPERTY AND
DIRECTOR OF THE UNITED STATES PATENT AND TRADEMARK OFFICE
WASHINGTON, D.C. 20231
WWW.USPTO.GOV

BAKER & BOTTS
30 ROCKEFELLER PLAZA
NEW YORK NY 10112

In re Application of	:
Wayne Cohen	:
Serial No.: 29/123,319	: PETITION DECISION
Filed: May 15, 2000	:
Attorney Docket No.: A33211-072708.0154	:

This is a decision on the petition to revive patent application under 37 CFR 1.137(b), filed on February 26, 2002, to revive an unintentionally abandoned application.

This application became abandoned for failure to overcome the Final Rejection, mailed July 27, 2001, which set a three month shortened statutory period to respond. Applicant submitted a response and a one month extension of time on November 15, 2001; however, an Advisory Action was mailed January 17, 2002, as the response did not overcome the Final rejection. No response to the Advisory Action was received; therefore, the application was abandoned. Applicant then filed this petition.

A review of the file history shows that applicant has satisfied all of the requirements of a petition under 37 CFR 1.137(b).

Applicant's petition is **GRANTED**.

Should there be any questions with regard to this letter please contact Sandra Morris, by letter addressed to the Director, Technology Center 3700/2900, Washington, DC 20231, or by telephone at (703) 305-3102 or by facsimile transmission at (703) 305-5679.

Sandra for
John Kittle
Director, Technology Center 3700/2900

UNITED STATES PATENT AND TRADEMARK OFFICE

Commissioner for Patents
United States Patent and Trademark Office
P.O. Box 1450
Alexandria, VA 22313-1450
www.uspto.gov

DORSEY & WHITNEY LLP
INTELLECTUAL PROPERTY DEPARTMENT
250 PARK AVENUE
NEW YORK NY 10177

COPY MAILED

AUG 28 2007

OFFICE OF PETITIONS

In re Application of	
Wayne Cohen	
Application No. 29/123,319	DECISION ON PETITION
Filed: May 15, 2000	TO WITHDRAW
Attorney Docket No. 033211/US-475494-00134	FROM RECORD

This is a decision on the Request to Withdraw as attorney or agent of record under 37 C.F.R. § 1.36(b), filed July 5, 2006.

The request is **APPROVED**.

A grantable request to withdraw as attorney/agent of record must be signed by every attorney/agent seeking to withdraw or contain a clear indication that one attorney is signing on behalf of another/others. A request to withdraw will not be approved unless at least 30 (thirty) days would remain between the date of approval and the later of the expiration date of a time to file a response or the expiration date of the maximum time period which can be extended under 37 C.F.R. § 1.136(a).

The request was signed by Gary Abelev on behalf of all attorneys of record. Applicant is reminded that there is no attorney of record at this time.

The correspondence address of record has been changed and the new correspondence address is the address indicated below.

Applicant is advised that a Notice of Allowance and Fee(s) Due was mailed on August 20, 2007, which requires the submission of the $400 issue fee to be paid on or before November 20, 2007 in order to avoid the abandonment of this application.

Telephone inquiries concerning this decision should be directed to the undersigned at (571) 272-3228.

Frances Hicks
Petitions Examiner
Office of Petitions

cc:

Wayne Cohen
Managing Director
Bongo Logic Co., Ltd.
44 Convent Road
Silom Bangrak, Bangkok
Thailand 10500

UNITED STATES PATENT AND TRADEMARK OFFICE

UNITED STATES DEPARTMENT OF COMMERCE
United States Patent and Trademark Office
Address: COMMISSIONER FOR PATENTS
P.O. Box 1450
Alexandria, Virginia 22313-1450
www.uspto.gov

APPLICATION NUMBER	FILING OR 371 (c) DATE	FIRST NAMED APPLICANT	ATTY. DOCKET NO./TITLE
29/123,319	05/15/2000	Wayne Cohen	033211/US - 475494 -134

CONFIRMATION NO. 2936

OC000000025577893

30873
DORSEY & WHITNEY LLP
INTELLECTUAL PROPERTY DEPARTMENT
250 PARK AVENUE
NEW YORK, NY 10177

Date Mailed: 08/28/2007

NOTICE REGARDING CHANGE OF POWER OF ATTORNEY

This is in response to the Power of Attorney filed 07/05/2006.

- The withdrawal as attorney in this application has been accepted. Future correspondence will be mailed to the new address of record. 37 CFR 1.33.

Frances Hicks

Office of Initial Patent Examination (571) 272-4000, or 1-800-PTO-9199

FORMER ATTORNEY/AGENT COPY

SPE RESPONSE FOR CERTIFICATE OF CORRECTION

Paper No.: X

DATE : March 24,2008

TO SPE OF : ART UNIT 2914

SUBJECT : Request for Certificate of Correction for Appl. No.: 29/127,383 Patent No.: D441083 S

A response is requested with respect to a request for a certificate of correction.

With respect to the change(s) requested to correct Office and/or Applicant's errors, should the patent read as shown in the certificate of correction attached herewith or the COCIN document(s), in IFW images for the above-identified patented application? No new matter should be introduced, nor should the scope or meaning of the claims be changed.

If the response is for an IFW, within 7 days, please complete and forward the response, to the employee (named below) via scanning into application images, using document code **COCX**.

DO NOT SENT TO ATTORNEY

If the response is for a paper file wrapper, please complete the response and forward the response with the paper file wrapper, to the employee (named below), within **7** days, to:

Certificates of Correction Branch (CofC)
South Tower - 9A22
Palm Location 7580

You can fax the Directors/SPE response to 571-270-9990

LAMONTE NEWSOME
Certificates of Correction Branch
703-308-9390 ext. 112

Thank You For Your Assistance

The request for issuing the above-identified correction(s) is hereby:
Note your decision on the appropriate box.

- ☑ **Approved** — **All** changes apply.
- ☐ **Approved in Part** — Specify below which changes **do not** apply.
- ☐ **Denied** — State the reasons for denial below.

Comments: _____

STELLA M. REID
SUPERVISORY PATENT EXAMINER
SPE

2912
Art Unit

UNITED STATES PATENT AND TRADEMARK OFFICE

JAN 21 2004

Commissioner for Patents
United States Patent and Trademark Office
P.O. Box 1450
Alexandria, VA 22313-1450
www.uspto.gov

KAM C LOUIE
LADAS & PARRY
5670 WILSHIRE BOULEVARD
SUITE 2100
LOS ANGELES, CA 90036-5679

#10

In re Application of	:
Meang Chia et al.	:
Serial No.: 29/127,622	: PETITION DECISION
Filed: August 8, 2000	:
Attorney Docket No.: 618069-6	:

This is in response to applicant's Petition under 37 CFR 1.181, filed November 18, 2003, based on not having responded to the Office action.

Applicants' petition is **GRANTED**.

A review of this application shows that a Restriction requirement was mailed February 14, 2003, setting a one month statutory time period to respond. As no response was received by March 14, 2003, a Notice of Abandonment was mailed October 1, 2003.

Applicant has submitted a copy of the response, along with a Certificate of Mailing date of April 14, 2003 and extension of time. However, applicant used the incorrect serial number on all of the correspondence; therefore, it was not associated with the correct application.

The application will be forwarded to the examiner for evaluation of applicants' response, after the mailing of this letter.

Should there be any questions with respect to this decision, please contact Sandra Morris; by mail addressed to: Director, Technology Center 3700/2900, P.O. Box 1450, Alexandria, VA 22313-1450; or by telephone at (703) 305-3102 or by facsimile transmission at (703) 305-5679.

John Kittle
Director, Technology Center 3700/2900

UNITED STATES
PATENT AND
TRADEMARK OFFICE

JUN 11 2003

UNDER SECRETARY OF COMMERCE FOR INTELLECTUAL PROPERTY AND
DIRECTOR OF THE UNITED STATES PATENT AND TRADEMARK OFFICE
WASHINGTON, D.C. 20231
WWW.USPTO.GOV

#5

DOUGLAS M EVELEIGH
MAYER BROWN & PLATT
P.O. BOX 2828
CHICAGO, IL 60690-2828

In re Application of
Jim LaHood
Serial No.: 29/127,833
Filed: August 11, 2000
Attorney Docket No.:

: WITHDRAWAL OF ABANDONMENT

This is in response to applicants' Petition to Revive Unavoidably Abandoned Application under 37 CFR 1.137(a), which is being treated as a Petition to Withdraw Abandonment under 37 CFR 1.181, filed October 30, 2002 based on failure to receive the office action mailed October 2, 2000. The delay in acting upon this petition is regretted.

A review of the file history shows that the Office mailed a Notice to File Missing Parts of Application, setting a two-month period for response. As no response was received, a Notice of Abandonment was mailed on July 24, 2002. This petition followed.

> M.P.E.P. 711.03(c) gives appropriate guidance as to how to proceed when an Office action is not received. To establish nonreceipt of an Office action, applicant must include a statement, attesting to the fact that applicant did not receive the communication, the showing required to establish nonreceipt of an Office communication must include a statement from the practitioner stating that the Office communication was not received by the practitioner and attesting to the fact that a search of the file jacket and docket records indicates that the Office communication was not received. A copy of the docket record where the nonreceived Office communication would have been entered had it been received and docketed must be attached to and referenced in practitioner's statement. See Notice entitled "Withdrawing the Holding of Abandonment When Office Actions Are Not Received," 1156 O.G. 53 (November 16, 1993).
>
> The showing outlined above may not be sufficient if there are circumstances that point to a conclusion that the Office action may have been lost after receipt rather than a conclusion that the Office action was lost in the mail (e.g., if the practitioner has a history of not receiving Office actions). Evidence of nonreceipt of an Office communication or action (e.g., Notice of Abandonment or an advisory action) other than that action to which reply was required to avoid abandonment would not warrant withdrawal of the holding of abandonment. Applicant's statement that the correspondence from the Office was not received is not enough evidence to prove that the response was not received.

Applicant should therefore present a copy of the docket record, as required by MPEP 711.03(c).

If applicant cannot provide this information, then the Petition under 37 CFR 1.137(a) is acceptable. The period of time to be disclaimed by applicant is that period of time equivalent to the period of time, in months, between the date of abandonment and the filing of a grantable petition. The period of time will be determined by the Office and applicant will be informed thereof.

Applicant's petition is **DISMISSED** without prejudice to the filing of a renewed petition. Any renewed petition must be filed within TWO MONTHS of the mailing date of this decision in order to be considered timely.

The $110.00 petition fee and $110.00 terminal disclaimer fee will be refunded if the petition is granted under 37 CFR 1.181, as no fees would be required.

Should there be any questions with regard to this letter please contact Sandra Morris; by letter addressed to the Director, Technology Center 3700/2900, PO Box 1450, Alexandria VA 22313-1450 or by telephone at (703) 305-3102 or by facsimile transmission at (703) 305-5679.

John Kittle
Director, Technology Center 3700/2900

UNITED STATES PATENT AND TRADEMARK OFFICE

Commissioner for Patents
United States Patent and Trademark Office
P.O. Box 1450
Alexandria, VA 22313-1450
www.uspto.gov

MAR 25 2004

DOUGLAS M EVELEIGH
MAYER BROWN & PLATT
P.O. BOX 2828
CHICAGO, IL 60690-2828

In re Application of
Jim LaHood
Serial No.: 29/127,833
Filed: August 11, 2000
Attorney Docket No.:

: WITHDRAWAL OF ABANDONMENT #7

This is in response to applicant's renewed Petition to Withdraw Abandonment under 37 CFR 1.181, filed August 11, 2003, based on failure to receive the office action mailed October 30, 2003. The delay in acting upon this petition is regretted.

A review of the file history shows that the Office mailed a Notice to File Missing Parts of Application, setting a two-month period for response. As no response was received, a Notice of Abandonment was mailed on July 24, 2002. Applicant filed a petition October 30, 2002, which was dismissed June 11, 2003, as no docket records were submitted.

Applicant's renewed petition includes proper evidence, showing that applicant never received the Notice.

Applicant's petition is **GRANTED.**

The $110.00 Petition fee and $110.00 terminal disclaimer fee will be refunded to applicant's Deposit Account 13-0019, as directed.

The application will be forwarded to an Examiner for initial examination of the application in due course.

Should there be any questions with respect to this decision, please contact Sandra Morris; by mail addressed to: Director, Technology Center 3700/2900, P.O. Box 1450, Alexandria, VA 22313-1450; or by telephone at (571) 272-2622.

John Kittle
Director, Technology Center 3700/2900

UNITED STATES PATENT AND TRADEMARK OFFICE

NOV 22 2004

COMMISSIONER FOR PATENTS
UNITED STATES PATENT AND TRADEMARK OFFICE
P.O. BOX 1450
ALEXANDRIA, VA 22313-1450
www.uspto.gov

#5

Christopher C Campbell Esq.
Hunton & Williams
1900 K Street NW
Suite 1200
Washington DC 20006

In re Application of	
Sunita Pargass	:
Serial No.: 29/128,260	:
Filed: June 14, 2000	: PETITION DECISION
Attorney Docket No.: 53394.000432	:
	:

This is in response to applicant's Petition to Withhold Abandonment under 37 CFR 1.181, filed April 18, 2002, and applicant's Petition to Withhold Abandonment under 37 CFR 1.137(b), filed October 12, 2004, due to non-receipt of the Office action. The extreme delay in acting upon this petition is regretted.

A review of the file history shows that a Notice to File Missing Parts was mailed November 15, 2000, setting a two month period to respond. As no response was submitted by December 15, 2000, a Notice of Abandonment was mailed on February 27, 2002. Applicant filed a Petition April 18, 2002, which was not immediately associated with the application.

Applicant has stated that he never received a copy of the Notice, and has submitted docket records that confirm this. Therefore, the application was abandoned in error, and the case will be returned to a pending status.

Applicant's petition is **GRANTED.**

The application will be promptly forwarded to an Examiner for initial examination in due course.

As there are no fees associated with Petitions granted under 37 CFR 1.181, the $1370.00 Petition fee will be refunded to applicant's Deposit Account 50-0206, as directed.

Should there be any questions with respect to this decision, please contact Sandra Morris; by mail addressed to: Director, Technology Center 3700/2900, P.O. Box 1450, Alexandria, VA 22313-1450; or by telephone at (571) 272-2622.

John Kittle
Director, Technology Center 3700/2900

UNITED STATES PATENT AND TRADEMARK OFFICE

JUN 10 2004

Commissioner for Patents
United States Patent and Trademark Office
P.O. Box 1450
Alexandria, VA 22313-1450
www.uspto.gov

KENYON & KENYON
ONE BROADWAY
NEW YORK, NY 10004

In re Application of	:
Thomas Bluemel	:
Serial No.: 29/129,213	: PETITION DECISION
Filed: September 8, 2000	:
Attorney Docket No.: 671910/00M3137	:

This is a decision on applicant's Petition for Withdrawal of Notice of Abandonment under 37 CFR 1.181, filed on August 18, 2003, to revive an unintentionally abandoned application. The extreme delay in acting upon this petition is regretted.

The petition is **DISMISSED**.

A review of the file history shows that the Office mailed a Final rejection to applicant on April 19, 2002. Applicant filed a response with an Extension of Time on October 1, 2002, which did not overcome the rejection. Therefore, an Advisory action was mailed October 28, 2002. Applicant filed a Notice of Appeal on October 25, 2002, and a Request for Continued Examination on December 2, 2002. Applicant was mailed a Notice of Improper RCE December 9, 2002, and a Notice of Abandonment was mailed July 15, 2003. This petition followed.

Applicant has stated that the application was abandoned in error, as applicant did not receive the December 9, 2002 communication. Regardless, the application was abandoned because RCE's do not apply to design patents under 37 CFR 1.114. Applicant may instead wish to file a Continued Prosecution Application (CPA) instead, along with a Petition to Revive under 37 CFR 1.137(b).

Any renewed petition in order to be considered timely must be filed within TWO MONTHS of the date of mailing of this decision.

Should there be any questions with respect to this decision, please contact Sandra Morris; by mail addressed to: Director, Technology Center 3700/2900, P.O. Box 1450, Alexandria, VA 22313-1450; or by telephone at (571) 272-2622.

John Kittle
Director, Technology Center 3700/2900

UNITED STATES PATENT AND TRADEMARK OFFICE

COMMISSIONER FOR PATENTS
UNITED STATES PATENT AND TRADEMARK OFFICE
P.O. BOX 1450
ALEXANDRIA, VA 22313-1450
www.uspto.gov

AUG 3 1 2004

KENYON & KENYON
ONE BROADWAY
NEW YORK, NY 10004

In re Application of
Thomas Bluemel
Serial No.: 29/129,213
Filed: September 8, 2000
Attorney Docket No.: 671910/00M3137

: PETITION DECISION

This is a decision on applicant's renewed petition to revive patent application under 37 CFR 1.137(b), filed on July 8, 2004, to revive an unintentionally abandoned application.

A review of the file history shows that the Office mailed a Final rejection to applicant on April 19, 2002. Applicant filed a response with an Extension of Time on October 1, 2002, which did not overcome the rejection. Therefore, an Advisory action was mailed October 28, 2002. Applicant filed a Notice of Appeal on October 25, 2002, and a Request for Continued Examination on December 2, 2002. Applicant was mailed a Notice of Improper RCE December 9, 2002, and a Notice of Abandonment was mailed July 15, 2003. Applicant submitted a petition under 37 CFR 1.181 on August 18, 2003, which was dismissed; this petition followed.

Applicant's petition is **GRANTED**.

The application will be forwarded to be processed as a CPA in due course.

Should there be any questions with respect to this decision, please contact Sandra Morris; by mail addressed to: Director, Technology Center 3700/2900, P.O. Box 1450, Alexandria, VA 22313-1450; or by telephone at (571) 272-2622.

John Kittle
Director, Technology Center 3700/2900

UNITED STATES PATENT AND TRADEMARK OFFICE

Commissioner for Patents
United States Patent and Trademark Office
P.O. Box 1450
Alexandria, VA 22313-1450
www.uspto.gov

Sughrue Mion Zinn Macpeak & Seas PLLC
2100 Pennsylvania Avenue N W
Washington, DC 20037-3202

COPY MAILED

JAN 0 8 2007

OFFICE OF PETITIONS

In re Application of

Sugiyama, et al.

Application No. 29/129,869

Filed: September 25, 2000

Attorney Docket No. Q-60949

DECISION ON PETITION

This is a decision on the petition to withdraw the holding of abandonment under 37 CFR 1.181(a), filed November 14, 2006.

The petition is **granted**.

This application was held abandoned May 1, 2001, after no reply was received to the Notice of Allowance and Issue Fee Due, mailed January 31, 2001. The notice set forth a statutory period of reply of three-months from its mailing date. No response was received within the allowable period and the application became abandoned on May 1, 2001. A Notice of Abandonment was mailed July 28, 2001. Petitioner maintains that the Notice of Allowance and Issue Fee Sue was never received and provides a copy of the relevant docketing calendar as proof of the same.

Section 711.03(c)(II) of the *Manual of Patent Examining Procedure* ("MPEP") provides that in order to establish non-receipt of an Office action so as prove that the imposition of a holding of abandonment is improper, petitioner must: 1) provide a statement to the Office indicating that the Office action was not received by petitioner; 2) include in the statement an attestation to the fact that a review of the file jacket and docket records maintained by petitioner indicates that the Office action was not received; and 3) provide a copy of the docket record where the non-received Office communication would have been entered had it been received and docketed.

Petitioner has met the burden of proof as established by Section 711.03(c)(II) of the MPEP. The holding of abandonment is, therefore, withdrawn.

The terminal disclaimer filed November 14, 2006, is noted and made of record.

The application file is being forwarded to the Office of Patent Publications for further processing including re-mailing of Notice of Allowance and Issue Fee Due and resetting of the time period for reply thereto.

Questions concerning this decision should be directed to the undersigned at (571) 272-3222.

Kenya A. McLaughlin
Petitions Attorney
Office of Petitions

UNITED STATES
PATENT AND
TRADEMARK OFFICE

JUN 11 2003

UNDER SECRETARY OF COMMERCE FOR INTELLECTUAL PROPERTY AND
DIRECTOR OF THE UNITED STATES PATENT AND TRADEMARK OFFICE
WASHINGTON, D.C. 20231
WWW.USPTO.GOV

#6

PORTER, WRIGHT, MORRIS & ARTHUR LLP
ATTN: INTELLECTUAL PROPERTY DEPT.
41 SOUTH HIGH STREET
COLUMBUS OH 43215-6194

In re Application of	:
Cher Esque	:
Serial No.: 29/131,063	: PETITION DECISION
Filed: October 13, 2000	:
Docket No.: 3994563-138859	:

This is a decision on applicant's Petition under 37 CFR 1.137(b) to withdraw abandonment filed March 26, 2002. The extreme delay in acting upon this petition is regretted; applicant's status letter received April 7, 2003 alerted the Office to the fact that the petition had not been correctly entered into the application.

The petition is **GRANTED**.

This application became abandoned for failure to respond to the Notice to File Missing Parts of Nonprovisional Application, filing date granted mailed November 9, 2000, which set a two-month statutory period for response. Upon failure to respond by January 9, 2001, the case was abandoned. This petition followed.

A grantable petition under 37 CFR 1.137(b), as revised December 1, 1997, requires four items: (1) a petition and petition fee; (2) a complete response if not earlier made; (3) a statement that the entire period of delay in prosecution was unintentional; and (4) a terminal disclaimer and disclaimer fee. A review of the file history shows that applicant has satisfied all of the requirements of a petition under 37 CFR 1.137(b).

The application will be forwarded to an Examiner after initial processing of the application.

Should there be any questions with regard to this letter please contact Sandra Morris; by letter addressed to Director, Technology Center 3700/2900, P.O. Box 1450, Alexandria, VA 22313-1450; or by telephone at (703) 305-3102 or by facsimile transmission at (703) 305-5679.

John Kittle
Director, Technology Center 3700/2900

UNITED STATES
PATENT AND
TRADEMARK OFFICE

FEB 21 2003

UNDER SECRETARY OF COMMERCE FOR INTELLECTUAL PROPERTY AND

DIRECTOR OF THE UNITED STATES PATENT AND TRADEMARK OFFICE
WASHINGTON, D.C. 20231
WWW.USPTO.GOV

JIANHUA FAN
5800 MAUDINA AVENUE
APT C-2
NASHVILLE TN 37209-3121

#12

In re Application of	:
Jianhua Fan	:
Serial No.: 29/132,203	: PETITION DECISION
Filed: November 3, 2000	:
Attorney Docket No.:	:

This is a decision on the renewed petition under 37 CFR 1.137(b), filed December 17, 2002, to revive an unintentionally abandoned application.

The petition is **DISMISSED**.

This application became abandoned for failure to respond to the Notice of Allowance and Issue Fee due, mailed April 19, 2002, which set a three month statutory period for payment of the Issue Fee. Upon failure to timely pay the Issue fee by July 19, 2002, a Notice of Abandonment was mailed October 22, 2002. This petition followed

A grantable petition under 37 CFR 1.137(b), as revised December 1, 1997, requires four items: (1) a petition and petition fee; (2) a complete response if not earlier made; (3) a statement that the entire period of delay in prosecution was unintentional; and (4) a terminal disclaimer and disclaimer fee. This petition lacks item (4), as no terminal disclaimer and fee therefor has been filed. For all design applications a terminal disclaimer must be filed (37 CFR 1.137(c)).

Any renewed petition in order to be considered timely must be filed within TWO MONTHS of the date of mailing of this decision. A copy of a Terminal Disclaimer has been included with this decision.

Should there be any questions with regard to this letter please contact Sandra Morris; by letter addressed to the Director, Technology Center 3700/2900, Washington, DC 20231, or by telephone at (703) 305-3102 or by facsimile transmission at (703) 305-5679.

John Kittle
Director, Technology Center 3700/2900

UNITED STATES PATENT AND TRADEMARK OFFICE

NOV 6 2003

Commissioner for Patents
United States Patent and Trademark Office
P.O. Box 1450
Alexandria, VA 22313-1450
www.uspto.gov

#14

JIANHUA FAN
5800 MAUDINA AVENUE
APT C-2
NASHVILLE TN 37209-3121

In re Application of	:
Jianhua Fan	:
Serial No.: 29/132,203	: PETITION DECISION
Filed: November 30 2000	:
Attorney Docket No.:	:

This is a decision on the renewed petition under 37 CFR 1.137(b), filed March 13, 2003, to revive an unintentionally abandoned application. The delay in acting upon this petition is regretted.

The Petition is **DISMISSED.**

Applicant is advised he did not complete the terminal disclaimer form; applicant must state whom the owner and of what interest he has in the application, and he must also check box (1), that he is submitting the terminal disclaimer on behalf of the company. Applicant may wish to submit this renewed terminal disclaimer by facsimile to Sandra Morris at 703-305-5679 to expedite the application.

Should there be any questions with regard to this letter please contact Sandra Morris; by letter addressed to the Director, Technology Center 3700/2900, P.O. Box 1450, Alexandria VA 22313-1450, or by telephone at (703) 305-3102 or by facsimile transmission at (703) 305-5679.

John Kittle
Director, Technology Center 3700/2900

UNITED STATES PATENT AND TRADEMARK OFFICE

Commissioner for Patents
United States Patent and Trademark Office
P.O. Box 1450
Alexandria, VA 22313-1450
www.uspto.gov

DEC 18 2003

#16

JIANHUA FAN
5800 MAUDINA AVENUE
APT C-2
NASHVILLE TN 37209-3121

In re Application of:	:
Jianhua Fan	:
Serial No.: 29/132,203	: PETITION DECISION
Filed: November 30, 2000	:
Attorney Docket No.:	:

This is a decision on the renewed Petition to Revive under 37 CFR 1.137(b), submitted by facsimile on November 19, 2003, to revive an unintentionally abandoned application.

This petition is **GRANTED**.

A review of the file history shows that applicant has now satisfied all of the requirements of a petition under 37 CFR 1.137(b).

The application will be forwarded to the Publication Division for printing as a patent in due course.

Should there be any questions with regard to this letter please contact Sandra Morris; by letter addressed to the Director, Technology Center 3700/2900, PO Box 1450, Alexandria VA 22313-1450; or by telephone at (703) 305-3102 or by facsimile transmission at (703) 305-5679.

John Kittle
Director, Technology Center 3700/2900

UNITED STATES PATENT AND TRADEMARK OFFICE

COMMISSIONER FOR PATENTS
UNITED STATES PATENT AND TRADEMARK OFFICE
P.O. BOX 1450
ALEXANDRIA, VA 22313-1450
www.uspto.gov

5/18/05

THE PROCTER & GAMBLE COMPANY
PATENT DIVISION
IVORYDALE TECHNICAL CENTER – BOX 474
5299 SPRING GROVE AVENUE
CINCINNATI, OH 45217

In re Application of
David William Schuller
Serial No.: 29/133,178
Filed: November 22, 2000
Attorney Docket No.: D-724

: PETITION DECISION

This is a decision on applicant's petition to revive patent application under 37 CFR 1.137(b), submitted April 17, 2002, to revive an unintentionally abandoned application. The extreme delay in acting upon this petition is regretted.

This application became abandoned for failure to respond to the Notice to File Missing Parts mailed December 18, 2000, which set a two-month statutory period to submit a signed Oath or Declaration and surcharge. As no response was received, a Notice of Abandonment was mailed March 12, 2002. Applicant then filed this petition.

A grantable petition for a design application under 37 CFR 1.137(b), as revised December 1, 1997, requires four items: (1) a petition and petition fee; (2) a complete response if not earlier made; (3) a statement that the entire period of delay in prosecution was unintentional; and (4) a terminal disclaimer and disclaimer fee. The requirement for a terminal disclaimer has been waived, as the petition was filed within two months of the mailing of the Notice of Abandonment.

Applicant's petition is **GRANTED**.

The application will be forwarded to an Examiner for initial examination in due course.

Should there be any questions with respect to this decision, please contact Sandra Morris; by mail addressed to: Director, Technology Center 1700/2900, P.O. Box 1450, Alexandria, VA 22313-1450; or by telephone at (571) 272-2622.

Jacqueline Stone
Director, Technology Center 1700/2900

UNITED STATES
PATENT AND
TRADEMARK OFFICE

UNDER SECRETARY OF COMMERCE FOR INTELLECTUAL PROPERTY AND
DIRECTOR OF THE UNITED STATES PATENT AND TRADEMARK OFFICE
WASHINGTON, D.C. 20231
WWW.USPTO.GOV

JAMES M. SINGER
PEPPER HAMILTON LLP
ONE MELLON CENTER, 50TH FLOOR
500 GRANT STREET
PITTSBURGH PA 15219

#9

In re Application of	:	
Catherine Creighton	:	
Serial No.: 29/133,707	:	WITHDRAWAL OF ABANDONMENT
Filed: December 5, 2000	:	
Attorney Docket No.: 104712.14D1	:	

This is in response to applicant's petition to Petition to Withdraw the Holding of Abandonment under 37 CFR 1.181, filed August 6, 2003.

A review of the file history shows that the Office mailed a Notice to File Missing Parts of Application to applicant on January 9, 2001, setting a two month period for response. As no response was received, a Notice of Abandonment was mailed on July 30, 2003. This petition followed.

Applicant has submitted a copy of the declaration, fees, and extension of time, as well as a copy of the response with a Certificate of Mailing date of May 24, 2001. A Post Card receipt showing that the Office received the response on May 24, 2001 was also submitted. In view of this it is concluded that the office erred in abandoning the application, as applicant timely responded to the Notice.

Applicant's request is **GRANTED**. The application is restored to a pending status with the mailing of this letter.

The application will be forwarded to an Examiner for initial examination after final processing of the application.

Should there be any questions with regard to this letter please contact Sandra Morris; by letter addressed to the Director, Technology Center 3700/2900, PO Box 1450, Alexandria VA 22313-1450; or by telephone at (703) 305-3102 or by facsimile transmission at (703) 305-5679.

John Kittle
Director, Technology Center 3700/2900

DONMENT WORKSHE

Application No.: 29/133717
Attorney or Applicant Name: Robert A Kouns
Telephone Number: 215 981-4406

- ☐ Date of 1st call 2-10-02
- ☐ Left Message
- ☐ No answer: call back
- ☐ Date of 2nd Call

****

- ☐ Express Abandonment. Forward to 0220 immediately.
- ☐ Retention. Forward to 0220 immediately.
- ☐ Applicant does not have an attorney
- ☐ Applicant has an attorney
- ☐ If there is no attorney – Call Applicant

- ☐ Telephone service is disconnected. A new number was not available.
- ☐ Telephone number has changed.
- ☐ New telephone number is _____
- ☐ Called the new telephone number

- ☐ Attorney no longer represents the applicant
- ☐ New Attorney has been assigned to this application.
- ☐ Contacted New Attorney
- ☐ New Attorney: Name: _____
  Telephone: _____

Abandon this Application (A copy of the RAM fee sheet must be enclosed)

- ☐ Sent for Abandonment _____
- ☐ Application should be abandoned as instructed by Attorney or Applicant
- ☐ _____
  Name of person who requested PTO to abandon the application

Do Not Abandon this Application (A copy of the RAM fee sheet must be enclosed)

- ☐ Petition to revive. Forward to 0220 immediately.
- ☐ Attorney did not receive Missing Parts Notice. Attorney will fax copy of docketing information.
- ☐ Response received on _____ (See PTO mail stamp.) Response is in the application.
- ☐ Application is being forwarded to JCWS formalities review for processing.
- ☐ Check RAM. RAM inquiry indicates a response was received. Requested applicant/attorney to fax response to me. Response enclosed.
- ☐ Awaiting call from Attorney
- ☒ Review of this application was completed by _____ Print your name.

UNITED STATES PATENT AND TRADEMARK OFFICE

COMMISSIONER FOR PATENTS
UNITED STATES PATENT AND TRADEMARK OFFICE
P.O. BOX 1450
ALEXANDRIA, VA 22313-1450
www.uspto.gov

6/24/05

Jeffrey M. Karmilovich
Dority & Manning, P.A.
P. O. Box 1449
Greenville SC 29602-1449

In re Application of
Randall C. Hansen
Serial No.: 29/134,618
Filed: December 22, 2000
Attorney Docket No.: VLM-33-D-CON

: PETITION DECISION

This is in response to applicant's Petition to Withdraw Holding of Abandonment filed under 37 CFR 1.181, received March 21, 2005, based on having responded to the Office action.

A review of the file history shows that a Notice of Allowance was mailed August 10, 2004, setting a three month statutory period to pay the Issue fee and submit formal drawings. The Issue fee was submitted November 10, 2004; however, upon failure to file formal drawings, a Notice of Abandonment was mailed on January 20, 2005.

Applicant has stated that formal drawings were filed November 10, 2004, and has submitted copies of the response which included a Certificate of Mailing. Therefore, as the formal drawings were timely submitted, the application will be returned to pending status.

Applicant's petition is **GRANTED.**

The application will be promptly forwarded to Publications to be printed as a patent in due course.

Should there be any questions with respect to this decision, please contact Sandra Morris; by mail addressed to: Director, Technology Center 1700/2900, P.O. Box 1450, Alexandria, VA 22313-1450; or by telephone at (571) 272-2622.

Jacqueline M. Stone

Jacqueline Stone
Director, Technology Center 1700/2900

UNITED STATES PATENT AND TRADEMARK OFFICE

DEC 18 2003

Commissioner for Patents
United States Patent and Trademark Office
P.O. Box 1450
Alexandria, VA 22313-1450
www.uspto.gov

#13

THOMAS A. O'ROURKE
BODNER & O'ROURKE, LLP
425 BROADHOLLOW ROAD
MELVILLE, NY 11747

In re Application of	:
Moses Richard Schultz	:
Serial No.: 29/135,955	: PETITION DECISION
Filed: January 21, 2001	:
Attorney Docket No.:	:

This is a decision on the Petition to Revive under 37 CFR 1.137(b), filed October 29, 2003, to revive an unintentionally abandoned application.

The petition is **DISMISSED**.

This application became abandoned for failure to respond to the Office action mailed June 12, 2002, which set a two month shortened statutory period to respond. Applicant filed an extension of time and a response on November 12, 2002; an Advisory action was mailed January 29, 2003, as the response did not overcome the final quayle action. Upon failure to respond by April 29, 2003, the application was abandoned. This petition followed.

A grantable petition under 37 CFR 1.137(b), as revised December 1, 1997, requires four items: (1) a petition and petition fee; (2) a complete response if not earlier made; (3) a statement that the entire period of delay in prosecution was unintentional; and (4) a terminal disclaimer and disclaimer fee. This petition lacks item (4), as no terminal disclaimer and fee therefor has been filed. For all design applications a terminal disclaimer must be filed (37 CFR 1.137(c)).

The Petition also lacks item (2), as a Notice of Appeal is not an acceptable response to a final quayle. As the claim has not been rejected, there are no grounds for filing an appeal.

Any renewed petition in order to be considered timely must be filed within TWO MONTHS of the date of mailing of this decision.

Should there be any questions with respect to this decision, please contact Sandra Morris; by mail addressed to: Director, Technology Center 3700/2900, P.O. Box 1450, Alexandria, VA 22313-1450; or by telephone at (703) 305-3102 or by facsimile transmission at (703) 305-5679.

John Kittle
Director, Technology Center 3700/2900

UNITED STATES PATENT AND TRADEMARK OFFICE

JUN 10 2004

Commissioner for Patents
United States Patent and Trademark Office
P.O. Box 1450
Alexandria, VA 22313-1450
www.uspto.gov

THOMAS A. O'ROURKE
BODNER & O'ROURKE, LLP
425 BROADHOLLOW ROAD
MELVILLE, NY 11747

In re Application of	:
Moses Richard Schultz	:
Serial No.: 29/135,955	: PETITION DECISION
Filed: January 21, 2001	:
Attorney Docket No.:	:

This is a decision on the renewed Petition to Revive under 37 CFR 1.137(b), originally filed February 5, 2004, and again on April 20, 2004, to revive an unintentionally abandoned application.

The petition is **DISMISSED**.

This application became abandoned for failure to respond to the Office action mailed June 12, 2002, which set a two month shortened statutory period to respond. Applicant filed an extension of time and a response on November 12, 2002; an Advisory action was mailed January 29, 2003, as the response did not overcome the final quayle action. Upon failure to respond by April 29, 2003, the application was abandoned. Applicant filed a Petition on October 29, 2003 that was dismissed, as it lacked a terminal disclaimer and a complete response.

A grantable petition under 37 CFR 1.137(b), as revised December 1, 1997, requires four items: (1) a petition and petition fee; (2) a complete response if not earlier made; (3) a statement that the entire period of delay in prosecution was unintentional; and (4) a terminal disclaimer and disclaimer fee.

This petition still lacks a complete response, as applicant has still not overcome the final drawing objection made by the examiner. There is still new matter in Figure 3, as there is no center seam on the backrest, and the rear legs must extend out from the edge of the seat, and then taper rearward. In Figure 4, there is no center hole at the rear of the V groove in the seat, nor a center seam on the back.

Any renewed petition in order to be considered timely must be filed within TWO MONTHS of the date of mailing of this decision.

Should there be any questions with respect to this decision, please contact Sandra Morris; by mail addressed to: Director, Technology Center 3700/2900, P.O. Box 1450, Alexandria, VA 22313-1450; or by telephone at (571) 272-2622.

John Kittle
Director, Technology Center 3700/2900

UNITED STATES PATENT AND TRADEMARK OFFICE

SEP 24 2004

COMMISSIONER FOR PATENTS
UNITED STATES PATENT AND TRADEMARK OFFICE
P.O. BOX 1450
ALEXANDRIA, VA 22313-1450
www.uspto.gov

THOMAS A. O'ROURKE
BODNER & O'ROURKE, LLP
425 BROADHOLLOW ROAD
MELVILLE, NY 11747

In re Application of
Moses Richard Schultz
Serial No.: 29/135,955
Filed: January 21, 2001
Attorney Docket No.:

: PETITION DECISION

This is a decision on the renewed Petition to Revive under 37 CFR 1.137(b) submitted July 5, 2004, to revive an unintentionally abandoned application.

This application became abandoned for failure to respond to the Office action mailed June 12, 2002, which set a two month shortened statutory period to respond. Applicant filed an extension of time and a response on November 12, 2002; an Advisory action was mailed January 29, 2003, as the response did not overcome the final quayle action. Upon failure to respond by April 29, 2003, the application was abandoned. Applicant filed a Petition on October 29, 2003 that was dismissed, as it lacked a terminal disclaimer and a complete response. Applicant submitted a renewed petition February 5, 2004, which was dismissed, again because it lacked a complete response.

Applicant's new drawings constitute a complete response.

Applicant's petition is **GRANTED.**

The application will be forwarded to the Examiner for evaluation of applicant's response in due course.

Should there be any questions with respect to this decision, please contact Sandra Morris; by mail addressed to: Director, Technology Center 3700/2900, P.O. Box 1450, Alexandria, VA 22313-1450; or by telephone at (571) 272-2622.

John Kittle
Director, Technology Center 3700/2900

UNITED STATES PATENT AND TRADEMARK OFFICE

SEP 24 2004

COPY FOR YOUR INFORMATION

COMMISSIONER FOR PATENTS
UNITED STATES PATENT AND TRADEMARK OFFICE
P.O. BOX 1450
ALEXANDRIA, VA 22313-1450
www.uspto.gov

THOMAS A. O'ROURKE
BODNER & O'ROURKE, LLP
425 BROADHOLLOW ROAD
MELVILLE, NY 11747

In re Application of
Moses Richard Schultz
Serial No.: 29/135,955
Filed: January 21, 2001
Attorney Docket No.:

: PETITION DECISION

This is a decision on the renewed Petition to Revive under 37 CFR 1.137(b) submitted July 5, 2004, to revive an unintentionally abandoned application.

This application became abandoned for failure to respond to the Office action mailed June 12, 2002, which set a two month shortened statutory period to respond. Applicant filed an extension of time and a response on November 12, 2002; an Advisory action was mailed January 29, 2003, as the response did not overcome the final quayle action. Upon failure to respond by April 29, 2003, the application was abandoned. Applicant filed a Petition on October 29, 2003 that was dismissed, as it lacked a terminal disclaimer and a complete response. Applicant submitted a renewed petition February 5, 2004, which was dismissed, again because it lacked a complete response.

Applicant's new drawings constitute a complete response.

Applicant's petition is **GRANTED.**

The application will be forwarded to the Examiner for evaluation of applicant's response in due course.

Should there be any questions with respect to this decision, please contact Sandra Morris; by mail addressed to: Director, Technology Center 3700/2900, P.O. Box 1450, Alexandria, VA 22313-1450; or by telephone at (571) 272-2622.

John Kittle
Director, Technology Center 3700/2900

UNITED STATES
PATENT AND
TRADEMARK OFFICE

UNDER SECRETARY OF COMMERCE FOR INTELLECTUAL PROPERTY AND
DIRECTOR OF THE UNITED STATES PATENT AND TRADEMARK OFFICE
WASHINGTON, D.C. 20231
WWW.USPTO.GOV

#9

SIEMENS CORPORATION
INTELLECTUAL PROPERTY DEPARTMENT
186 WOOD AVENUE SOUTH
ISELIN, NJ 08830

In re Application of	:	
Axel Platz	:	NOTICE OF WITHDRAWAL
Serial No.: 29/136,723	:	FROM ISSUE
Filed: February, 6, 2001	:	UNDER 37 CFR 1.313(b)
For: Icon for a Portion of a Computer	:	
Screen	:	

The above-identified application is withdrawn from issue after payment of the issue fee to continue prosecution under Exparte Quayle, to address the issue of correspondence between a claim for priority under 35 USC 119, and documents supporting such claim.

The above-identified application is hereby withdrawn from issue.

The issue fee is refundable upon written request. If, however, the application is again found allowable, the issue fee can be applied toward payment of the issue fee in the amount identified on the new Notice of Allowance and Issue Fee Due upon written request. This request and any balance due must be received on or before the due date noted in the new Notice of Allowance in order to prevent abandonment of the application.

Telephone inquiries should be directed to John E. Kittle at (703)308-0873.

The above-identified application is being forwarded to the examiner for prompt appropriate action, including notifying applicant of the new status of this application.

John E. Kittle
Director
Technology Center 3700/2900

UNITED STATES PATENT AND TRADEMARK OFFICE

UNITED STATES DEPARTMENT OF COMMERCE
United States Patent and Trademark Office
Address: COMMISSIONER OF PATENTS AND TRADEMARKS
Washington, D.C. 20231
www.uspto.gov

APPLICATION NO.	FILING DATE	FIRST NAMED INVENTOR	ATTORNEY DOCKET NO.	CONFIRMATION NO.
29/137,023	02/12/2001	Julian S. Taylor	3545	2071

7590 02/28/2003

RANDALL K. MCCARTHY
FELLERS SNIDER BLANKENSHIP BAILEY & TIPPENS, P.C.
BANK ONE TOWER
100 NORTH BROADWAY, SUITE 1700
OKLAHOMA CITY, OK 73102-8820

EXAMINER
TAYLOR, ROBIN V

ART UNIT	PAPER NUMBER
2911	12

DATE MAILED: 02/28/2003

Please find below ~~and/or~~ attached an Office communication concerning this application or proceeding.

UNITED STATES
PATENT AND
TRADEMARK OFFICE

UNDER SECRETARY OF COMMERCE FOR INTELLECTUAL PROPERTY AND

DIRECTOR OF THE UNITED STATES PATENT AND TRADEMARK OFFICE
WASHINGTON, D.C. 20231
WWW.USPTO.GOV

RANDALL K. MCCARTHY
FELLERS, SNIDER BLANKENSHIP, BAILEY
& TIPPENS, P.C.
BANK ONE TOWER
100 N. BROADWAY, SUITE 1700
OKLAHOMA CITY, OK 73102-8820

In re Application of	:
Julian S. Taylor	:
Serial No.: 29/137,023	: PETITION DECISION
Filed: February 12, 2001	:
Attorney Docket No.: 3545	:

This is a decision on the petition filed under 37 CFR 1.137(b), received October 22, 2002, to revive an unintentionally abandoned application.

The petition is **DISMISSED**.

This application became abandoned for failure to respond to the Notice of Allowability mailed September 27, 2001, which set a three-month statutory period for submitting new formal drawings. Upon failure to submit new formal drawings by December 27, 2001, the case was abandoned. This petition followed.

A grantable petition under 37 CFR 1.137(b), requires four items: (1) a petition and petition fee; (2) a complete response if not earlier made; (3) a statement that the *entire* period of delay in prosecution was unintentional; and (4) a terminal disclaimer and disclaimer fee. The present petition lacks item (2) since the new drawings submitted therewith are not considered a complete response inasmuch as they introduce new matter not supported by the original disclosure in the application.

Specifically, there's no support in the original drawing disclosure for the following changes to the configuration of the claimed design, (see attached annotated print of the new and original drawings):

1) The circled structure,1, shown in Figs. 1, 2, 3, 5 and 6 of the new drawing does not conform to the configuration of the corresponding structure shown in the original drawings;
2) The member,2, shown in Figs. 1, 2, 3 and 6 of the original drawing is not shown in the corresponding views of the new drawing and is incorrectly shown in Fig. 4 of the new drawing;

3) The concave edge,3, shown in Fig. 3 of the new drawing is not shown in Fig. 3 of the original drawing;
4) The cylindrical member,4, shown in Fig. 4 of the original drawing is not shown in Fig. 4 of the new drawing;
5) The lines,5, shown in Fig. 4 of the new drawing do not conform to the positioning of the lines,5, in the original drawing; and
6) The structure,6, shown in Fig. 5 of the new drawing is not located on the same side as in Fig. 5 of the original drawing.

The new drawings must be corrected so as to conform to the claimed design shown in the original drawings in order to be considered a complete response.

Any renewed petition in order to be considered timely must be filed within **TWO MONTHS** of the date of mailing of this decision.

Should there be any questions with regard to this letter please contact James Gandy, by letter addressed to the Director, Technology Center 3700/2900, Washington, DC 20231, or by telephone at (703) 305-3264.

James Gandy for
John Kittle
Director, Technology Center 3700/2900

OIPE JC95
OCT 2 2 2002
PATENT & TRADEMARK OFFICE

Title: RIGHT ANGLE THROTTLE VALVE HO
Inventors: Julian S. Taylor
Dkt. No.: 3545
S.N.: 29/137,
Filed: February 12, 2001

NEW DRAWING

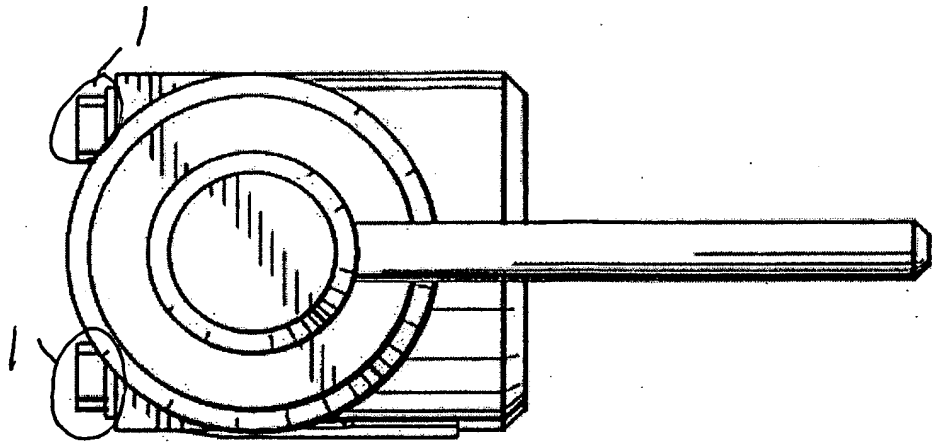

FIG. 2

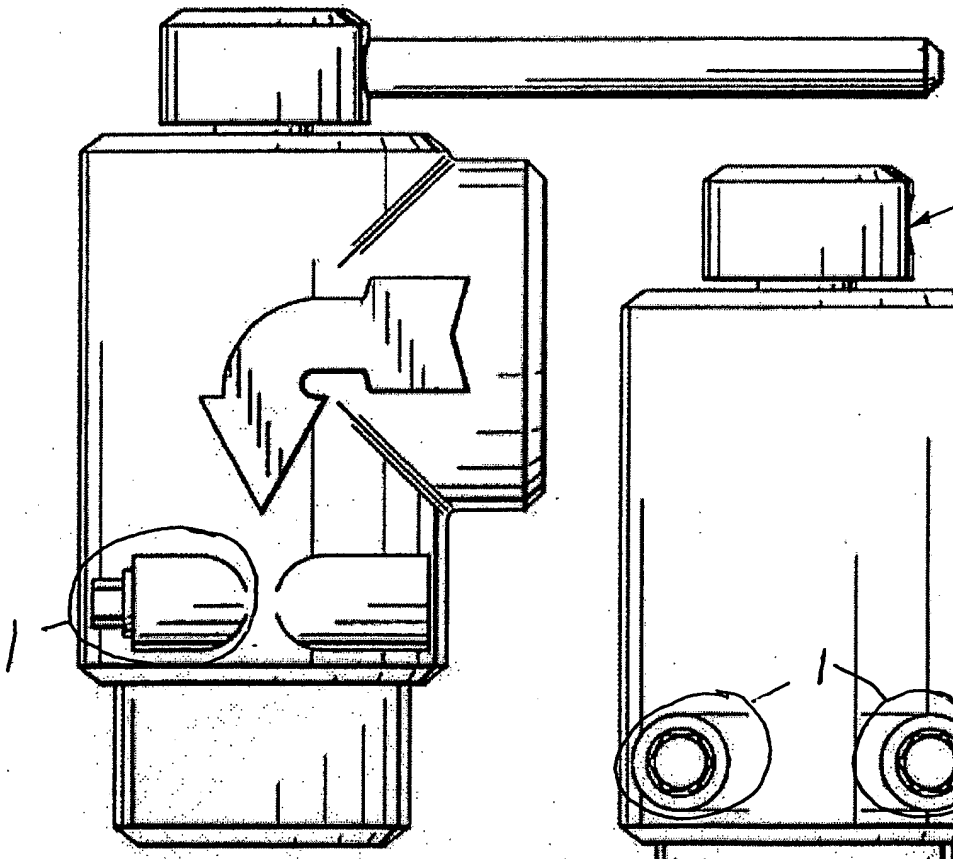

FIG. 1

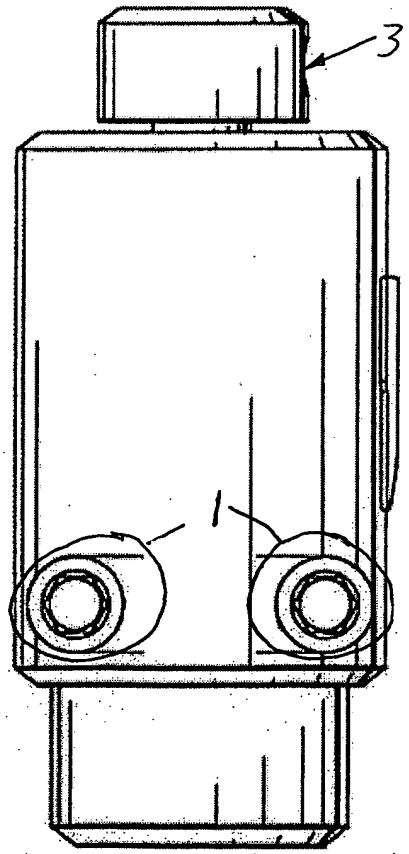

FIG. 3

Tit GHT ANGLE THROTTLE VALVE HOUSING
Inventors: Julian S. Taylor
Dkt. No.: 3545

S.N.: 29/137,023
Filed: February 12, 2001

NEW DRAWING

OIPE JC95
OCT 2 2 2002
PATENT & TRADEMARK OFFICE

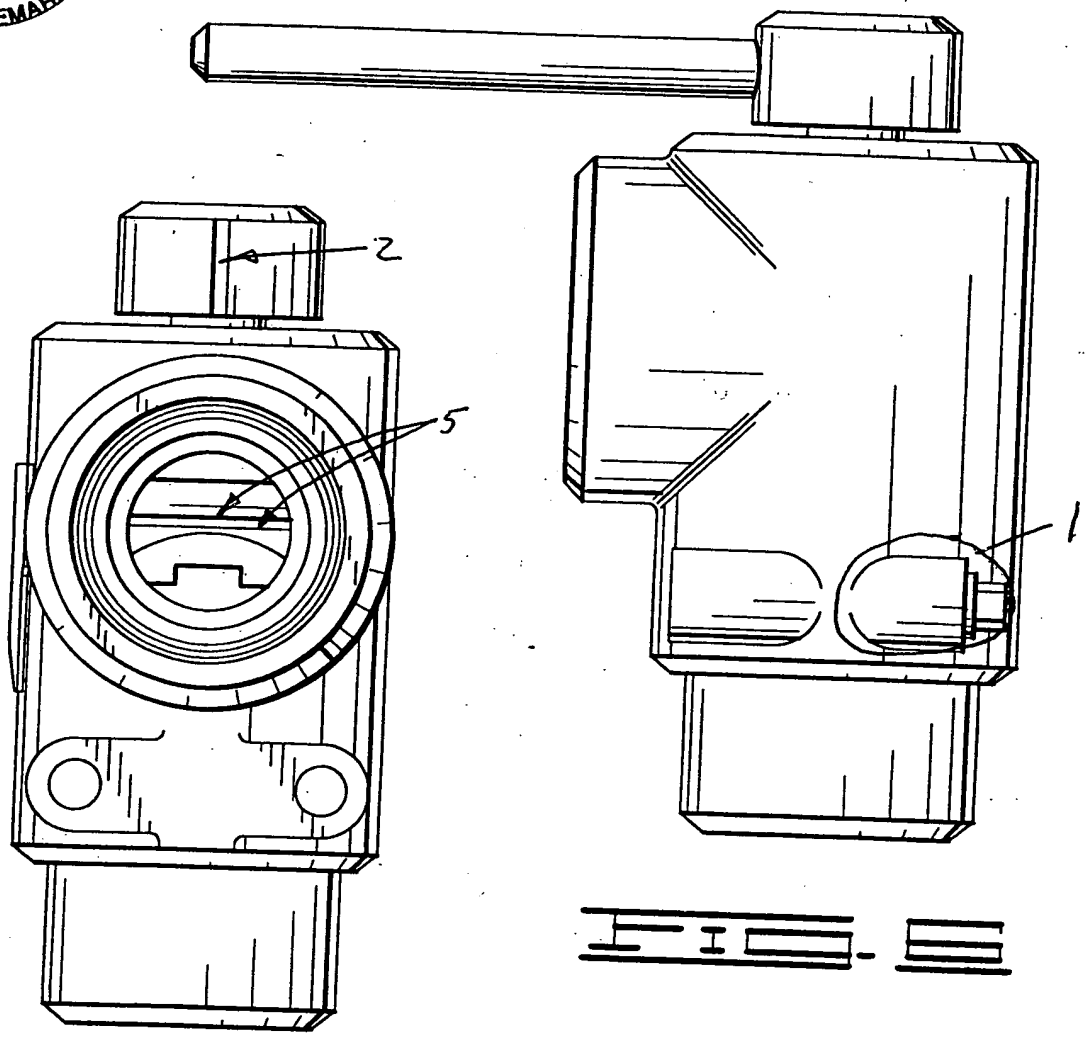

FIG. 5

FIG. 4

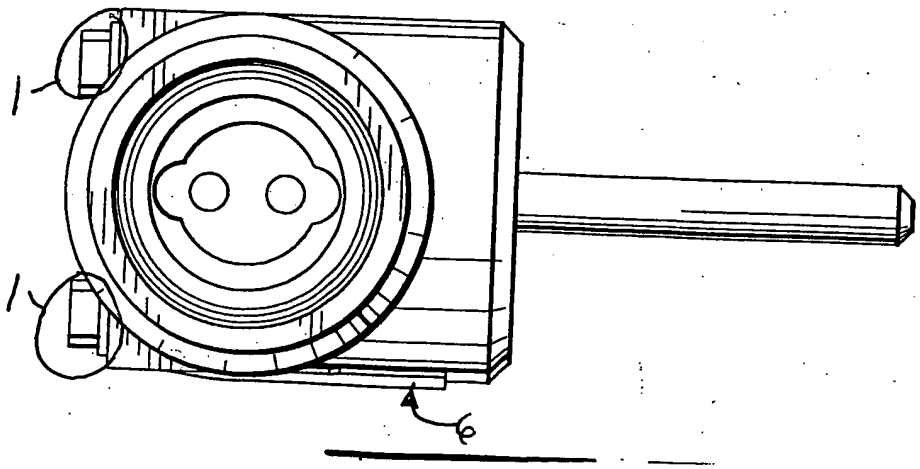

ORIGINAL DRAWING

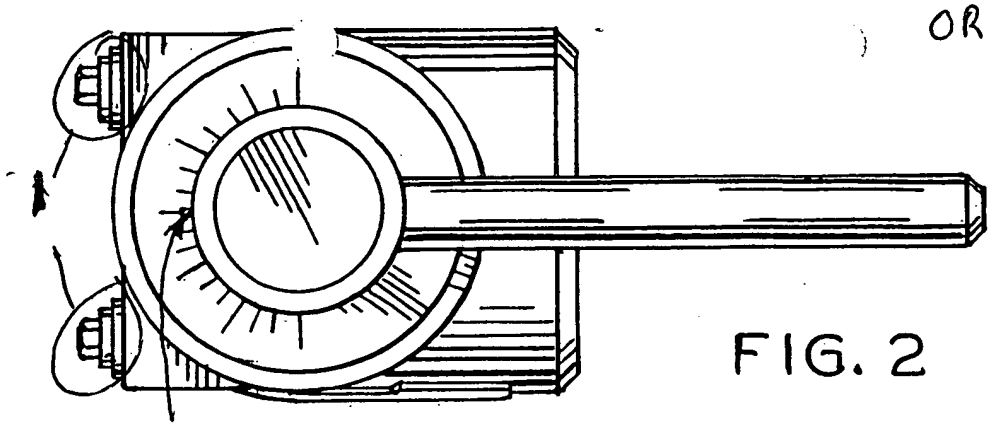

FIG. 2

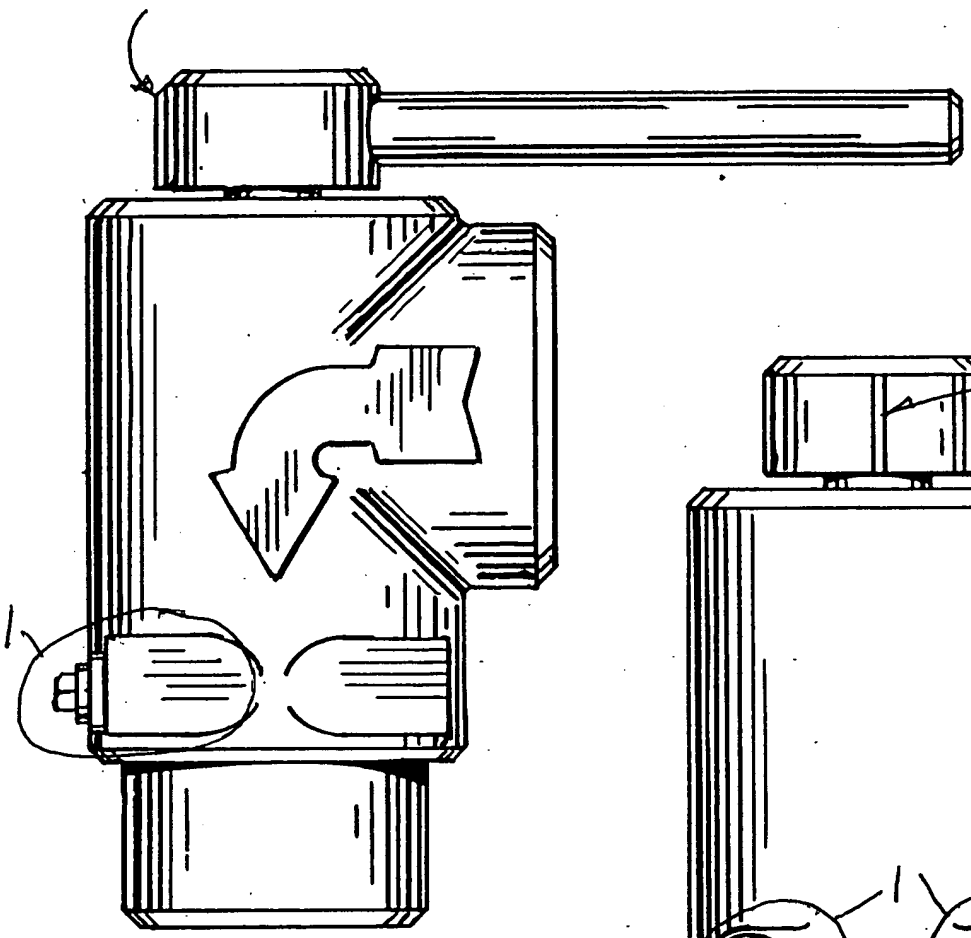

FIG. 1

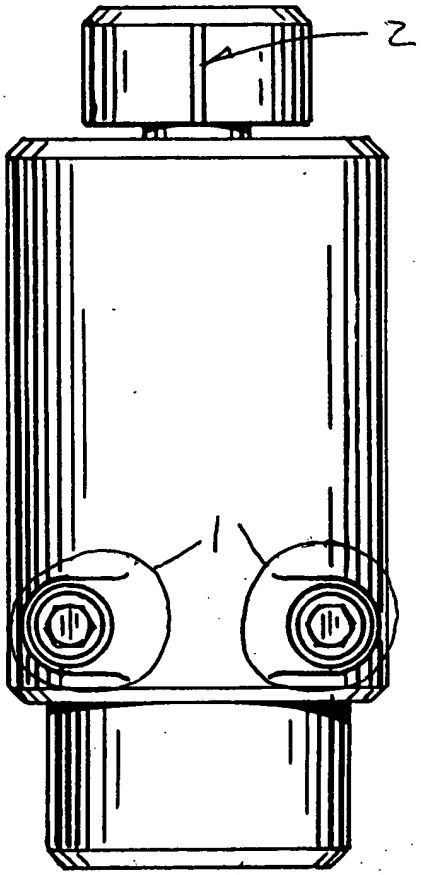

FIG. 3

ORIGINAL DRAWING

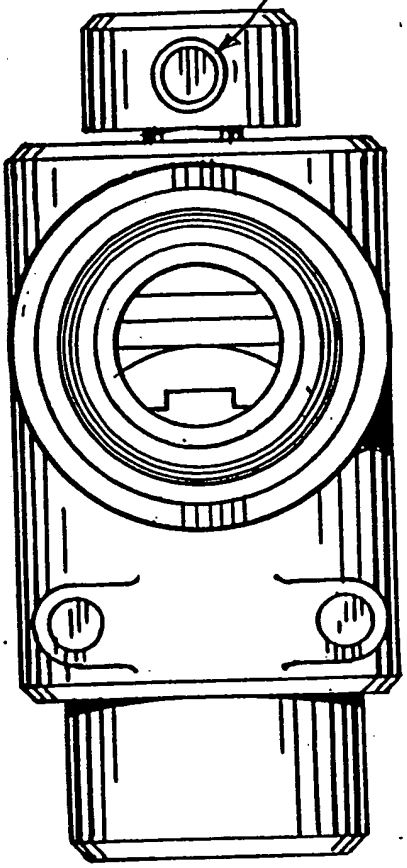

FIG. 4

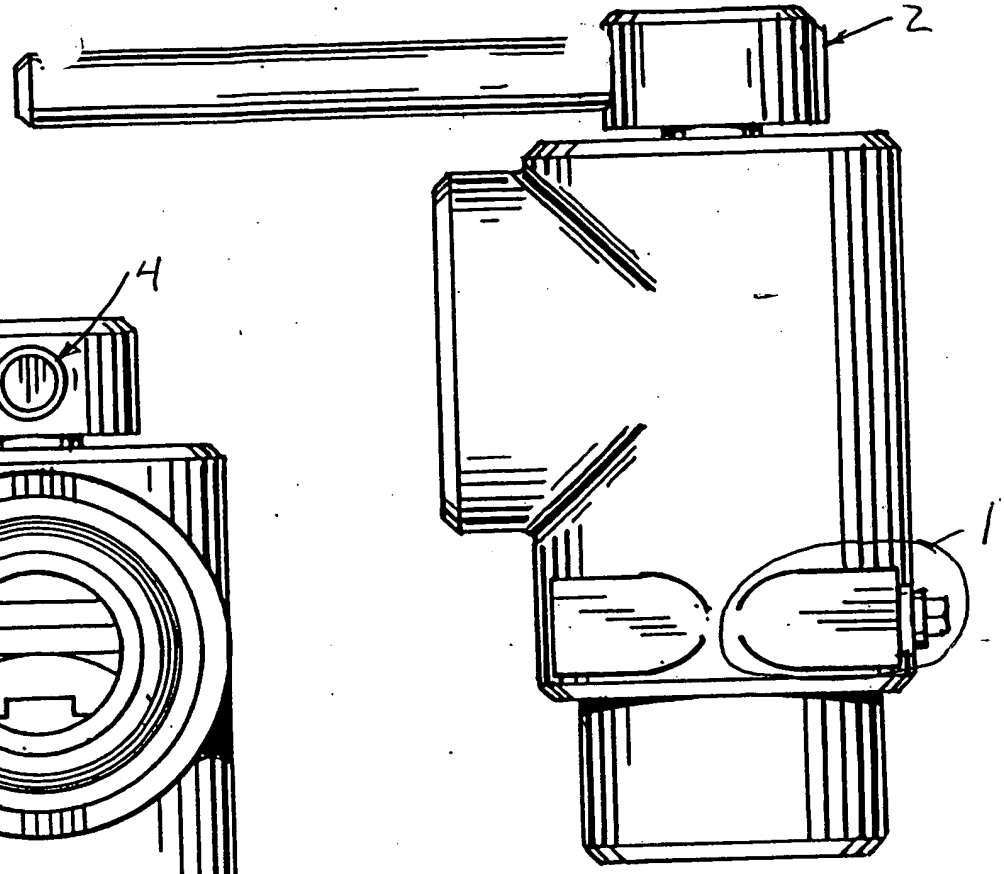

FIG. 6

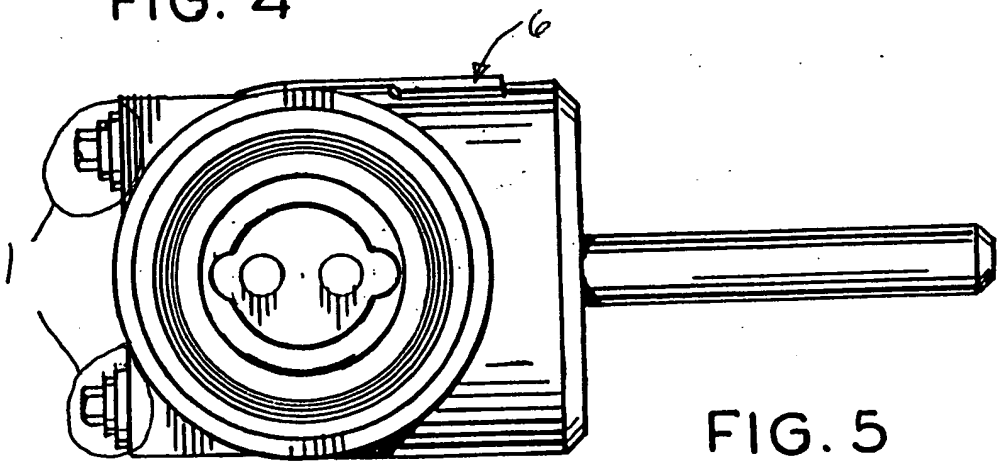

FIG. 5

UNITED STATES PATENT AND TRADEMARK OFFICE

UNITED STATES DEPARTMENT OF COMMERCE
United States Patent and Trademark Office
Address: COMMISSIONER OF PATENTS AND TRADEMARKS
Washington, D.C. 20231
www.uspto.gov

APPLICATION NO.	FILING DATE	FIRST NAMED INVENTOR	ATTORNEY DOCKET NO.	CONFIRMATION NO.
29/137,023	02/12/2001	Julian S. Taylor	3545	2071

7590 04/16/2003

RANDALL K. MCCARTHY
FELLERS SNIDER BLANKENSHIP BAILEY & TIPPENS, P.C.
BANK ONE TOWER
100 NORTH BROADWAY, SUITE 1700
OKLAHOMA CITY, OK 73102-8820

EXAMINER
TAYLOR, ROBIN V

ART UNIT	PAPER NUMBER
2911	15

DATE MAILED: 04/16/2003

Please find below and/or attached an Office communication concerning this application or proceeding.

UNITED STATES
PATENT AND
TRADEMARK OFFICE

UNDER SECRETARY OF COMMERCE FOR INTELLECTUAL PROPERTY AND

DIRECTOR OF THE UNITED STATES PATENT AND TRADEMARK OFFICE
WASHINGTON, D.C. 20231
WWW.USPTO.GOV

RANDALL K. MCCARTHY
FELLERS, SNIDER, BLANKENSHIP, BAILEY
& TIPPENS, P.C.
BANK ONE TOWER
100 N. BROADWAY, SUITE 1700
OKLAHOMA CITY, OK 73102-8820

In re Application of	:
Julian S. Taylor	:
Serial No.: 29/137,023	: PETITION DECISION
Filed: February 12, 2001	:
Attorney Docket No.: 3545	:

This is a decision on the renewed petition filed under 37 CFR 1.137(b), received March 12, 2003, to revive an unintentionally abandoned application.

This application became abandoned for failure to submit new formal drawings in response to the Notice of Allowance within three months from the mailing date of September 27, 2001. A petition to revive was filed on October 22, 2002, which was dismissed for deficiencies. This renewed petition followed.

A review of the file history shows that applicant has now satisfied all of the requirements of a petition under 37 CFR 1.137(b).

Applicants' petition is **GRANTED**.

The application will be forwarded to the Publication Division for printing as a patent in due course.

Should there be any questions with regard to this letter please contact James Gandy, by letter addressed to the Director, Technology Center 3700/2900, Washington, DC 20231, or by telephone at (703) 305-3264.

James Gandy for
John Kittle
Director, Technology Center 3700/2900

UNITED STATES
PATENT AND
TRADEMARK OFFICE

UNDER SECRETARY OF COMMERCE FOR INTELLECTUAL PROPERTY AND
DIRECTOR OF THE UNITED STATES PATENT AND TRADEMARK OFFICE
WASHINGTON, D.C. 20231
WWW.USPTO.GOV

JUN 19 2001

#4

KOLISCH, HARTWELL, DICKSON,
McCORMACK & HEUSER
520 S.W. YAMHILL STREET
SUITE 200
PORTLAND, OR 97204

In re Application of	:	
Andrew Wolf	:	
Serial No.: 29/137,466	:	DECISION ON PETITION
Filed: February 20, 2001	:	
For: Snow-gliding apparatus (Design)	:	

This is in response to applicants' petition filed May 23, 2001, to make the above-identified application special under the provisions of 37 CFR 1.102(d), based on infringement.

Applicant has satisfied the provisions set forth in M.P.E.P. 708.02, II. Therefore the petition is **GRANTED**. .

The application will be forwarded to the examiner for action on the merits commensurate with this decision.

Should there be any questions with regard to this letter please contact John Kittle by letter addressed to the Director, Technology Center 3700/2900, Washington, DC 20231, or by telephone at (703) 308-0873 or by facsimile transmission at (703) 308-3139.

John E. Kittle
Director
Technology Center 3700/2900

UNITED STATES
PATENT AND
TRADEMARK OFFICE

UNDER SECRETARY OF COMMERCE FOR INTELLECTUAL PROPERTY
AND DIRECTOR OF THE UNITED STATES PATENT AND TRADEMARK OFFICE
WASHINGTON, D.C. 20231
WWW.USPTO.GOV

CYNTHIA R. MILLER
LADAS & PARRY
26 WEST 61ST STREET
NEW YORK, NEW YORK 10023

RECEIVED
OCT 3 0 2002
L.&P.

In re Application of
Maurizio Miglietta et al.
Serial No.: 29/137,669
Filed: January 12, 2001
Attorney Docket No.: UD 051431-8

PETITION DECISION

This is a decision on the petition filed August 12, 2002 pursuant to 37 CFR 1.144, from the final restriction requirement made by the examiner on May 8, 2002.

A review of the record reveals that petitioners have presented first and second families of a design invention directed to icons for a vehicle display unit shown in figures 1 through 68 of the drawing. In the first Office action mailed January 4, 2002 the examiner identified 68 separate embodiments and required restriction under 35 U.S.C. 121 setting forth XXVI patentably distinct groups of designs. In the response dated January 29, 2002 applicant elected Group I and canceled Groups II - XXVI with traverse, arguing that the embodiments shown in Figs 1-32 are "the same invention". In the Office action of May 8, 2002, the examiner maintained the restriction requirement and made it final.

Applicants now petition the Commissioner to withdraw the restriction requirement with regards to the embodiments shown in figures 1-32 of the drawing, but concede that the embodiments shown in figures 33-68 "represent a different design concept". In support of their request to withdraw the restriction requirement, petitioners assert that the embodiments shown in figures 1-32 "do not represent overall appearances that are distinct from one another but are considered obvious variations of one another comprising a single inventive concept". Further, petitioners assert that the sole or dominant element of the design of the embodiments shown in figures 1-32 is a trapezoidal element with a car positioned centrally thereon. The other element or elements shown in the embodiments of Groups II through XXII petitioners assert are not only de minimis and unrelated to the overall aesthetic appearance of the design, but would be obvious to the ordinary designer of vehicular visual displays.

The basic consideration in making a restriction requirement is that the inventions be independent and distinct and be able to support separate design patents, MPEP 802.01, MPEP 1504.05 and 37 CFR 1.142. Inasmuch as a design patent deals with appearance only, the test of patentable

distinction relates to identity or obvious variations in appearance as between the identified groups. Visual comparisons are essential and controlling factors.

The obviousness standard under 35 U.S.C. 103(a) must be applied in determining whether multiple embodiments may be retained in a single application. That is, each of the embodiments must be considered a proper basic reference against the other. In order to be considered a proper basic reference each of the embodiments must have an overall appearance basically the same as the others. *In re Rosen*, 673 F.2d 388, 213 USPQ 347 (CCPA 1982). If embodiments are considered to have overall appearances that are basically the same then the differences between the embodiments must be identified. Those differences between embodiments must then be determined to be either de minimis and unrelated to the overall aesthetic appearance, or must be obvious to a designer of ordinary skill in view of analogous prior art in order for the embodiments to be retained in a single application. MPEP 1504.05

The issue to be decided on Petition is whether the embodiments set forth in Groups I through XII, figures 1-32, are properly restricted under 35 U.S.C. 121.

The Examiner contends that the appearance of the embodiments in Groups I through XII are patentably distinct each from the other because the inclusion of other elements does change the overall appearance of the embodiments of Groups II through XXII over the embodiments shown in Group I. Furthermore, the examiner contends that these other elements cannot be discounted as minor and that the trapezoidal shape cannot be considered in a vacuum.

A study of the embodiments in Groups I through XII reveals that they all have a common fundamental characteristic, i.e. a trapezoidal element with a car positioned centrally thereon, the overall appearance of which is basically the same. Hence, the embodiments in each group could be considered a proper basic reference against the embodiments in the other groups. Therefore, it must now be determined whether the differences between the embodiments in each of the groups is either de minimis and unrelated to the overall aesthetic appearance, or obvious to a designer of ordinary skill in view of analogous prior art. A review of the embodiments in Groups II through XXII reveals that they include other elements in the form of an arrow or arrows, box-like element, extension at the short end of the trapezoidal body and a line defining a rectangular frame around the trapezoidal body. The inclusion of one or more of these elements in the embodiments of Groups II through XXII is seen to have a distinct impact on the overall appearance of these embodiments that cannot be dismissed as de minimis and unrelated to their overall aesthetic appearance. Therefore, in order for the embodiments in Group II through XXII to be considered patentably indistinct from the embodiments of Group I the above identified elements must be shown to be obvious to a designer of ordinary skill in view of analogous prior art. While petitioners assert that the inclusion of an arrow or arrows, box-like element and extension at the short end of the trapezoidal body in the embodiments of Groups II through XXII would be obvious to a designer of ordinary skill they provide no factual evidence to support their assertion. As stated in the last paragraph on page 4 of the first Office action "[S]hould applicant traverse this requirement on the grounds that the embodiments comprise a single inventive concept or are not patentably distinct, applicant should present evidence or identify evidence now of record showing the embodiments to be obvious variations of one another". Since petitioners have not provided or identified any such evidence the embodiments of Groups I through XXII are not

considered obvious or patentably indistinct from each other.

For the reasons set forth above the requirement for restriction is considered proper.

The Petition is DENIED.

Should there be any questions with regard to this letter please contact James Gandy by letter addressed to the Director, Technology Center 3700/2900, Washington, DC 20231, or by telephone at (703) 305-3264 or by facsimile transmission at (703) 308-2742.

John Kittle
Director, Technology Center 3700/2900

UNITED STATES PATENT AND TRADEMARK OFFICE

COMMISSIONER FOR PATENTS
UNITED STATES PATENT AND TRADEMARK OFFICE
P.O. BOX 1450
ALEXANDRIA, VA 22313-1450
WWW.USPTO.GOV

Paper No. 5

WARNER-LAMBERT COMPANY
201 TABOR RD
MORRIS PLAINS NJ 07950

COPY MAILED

JUN 0 6 2003

OFFICE OF PETITIONS

In re Application of
Carley, et al.
Application No. 29/137,936
Filed: March 1, 2001
Title: AQUARIUM FILTER

ON PETITION

This is a decision on the paper titled "Reply for Petition for Revival of an Abandoned Application for Patent Abandoned Unintentionally Under 1.137(b)", filed March 12, 2002 (Certificate of Mailing dated March 1, 2002), which is being treated as a petition to withdraw the holding of abandonment under 37 CFR 1.181 (no fee). The Office apologizes for the delay.

The petition under 37 CFR 1.181 is **GRANTED**.

The above-identified application was filed on March 1, 2001, without an executed oath or declaration. However, the Office was not able to mail a "Notice to File Missing Parts" because there was no record of a transmittal letter containing a correspondence address. As there was no record of a correspondence address, and no executed oath or declaration was supplied on filing, the application became abandoned on May 2, 2002.[1] Applicant states that he learned the application became abandoned during a telephone call to the Office of March 1, 2002. Accordingly, the instant petition is considered to be timely filed.

However, on petition, applicant has supplied a copy of a three page "Design Patent Application Transmittal", together with a USPTO date stamped postcard receipt evidencing receipt of a "Design Patent Application Transmittal (3 pgs)".

---

[1] If an application which has been accorded a filing date pursuant to paragraph (b) of this section does not include the basic filing fee or an oath or declaration by the applicant pursuant to §§ 1.63, 1.162 or § 1.175, and applicant has not provided a correspondence address (§ 1.33(a)), applicant has two months from the filing date of the application within which to pay the basic filing fee, file an oath or declaration, and pay the surcharge required by § 1.16(e) to avoid abandonment. 37 CFR 1.53(f)(2).

A postcard receipt which itemizes and properly identifies the items which are being filed serves as *prima facie* evidence of receipt in the Office of all items listed thereon on the date stamped thereon by the Office.[2]

Accordingly, it is concluded that the "Design Patent Application Transmittal" was present on filing, but was lost by the Office.

In view of the above, the holding of abandonment is **WITHDRAWN**.

Given the basis for granting this petition, no petition fee was required. In addition, the terminal disclaimer was not required.[3] Accordingly, the $1,280 petition fee and the $110 terminal disclaimer fee have been refunded to Deposit Account No. 23-0450.

However, it is noted that applicant supplied a copy of an executed declaration via facsimile on February 10, 2003, but did not submit the required $130 surcharge for late filing of the declaration. Therefore, the $130 surcharge will be charged to Deposit Account No. 23-0450, as authorized.

The application file is being forwarded to Technology Center 2900, Group Art Unit 2911, for examination.

Telephone inquiries related to this decision should be directed to the undersigned at (703) 305-0272.

Cliff Congo
Petitions Attorney
Office of Petitions

---

[2] See MPEP 503.

[3] The terminal disclaimer will not be entered, although it will remain in the application file.

UNITED STATES
PATENT AND
TRADEMARK OFFICE

UNDER SECRETARY OF COMMERCE FOR INTELLECTUAL PROPERTY AND

DIRECTOR OF THE UNITED STATES PATENT AND TRADEMARK OFFICE
WASHINGTON, D.C. 20231
WWW.USPTO.GOV

JUL 16 2004

JOHN DODDS
1707 N ST., NW
WASHINGTON DC 20036

#6

In re Application of	:	
William Bowman Jr.	:	
Serial No.: 29/138,400	:	WITHDRAWAL OF ABANDONMENT
Filed: February 20, 2001	:	
Attorney Docket No.:	:	

This is in response to applicant's Petition to Withdraw Holding of Abandonment, which is being treated as a request for withdrawal of abandonment under 37 CFR 1.181, filed November 26, 2002.

A review of the file history shows that the Office mailed an Office action to applicant on March 5, 2002, and again on April 3, 2002, setting a one month shortened statutory period for response. As no response was received, a Notice of Abandonment was mailed November 14, 2002. This petition followed.

Applicant has stated and submitted docket records, which show that applicant did respond to the Office action by submitting an election requirement, as well as a Divisional application on May 2, 2002. While the paper was never matched with the application, in view of this evidence it is clear that applicant timely responded to the Office action.

Applicant's request is **GRANTED**. The application is restored to a pending status with the mailing of this letter.

The application will be forwarded to the Examiner for further examination of the application.

Should there be any questions with regard to this letter please contact Sandra Morris, by letter addressed to the Director, Technology Center 3700/2900, Washington, DC 20231, or by telephone at (~~703~~) ~~305-3102~~ or by facsimile transmission at (~~703~~) ~~305-5679~~.
571-273-2622 571-273-2622

John Kittle
Director, Technology Center 3700/2900

UNITED STATES PATENT AND TRADEMARK OFFICE

COMMISSIONER FOR PATENTS
UNITED STATES PATENT AND TRADEMARK OFFICE
WASHINGTON, D.C. 20231
www.uspto.gov

Paper No. 13

FULBRIGHT & JAWORSKI, LLP
666 FIFTH AVE.
NEW YORK, NY 10103-3198

COPY MAILED

DEC 27 2002

OFFICE OF PETITIONS

In re Application of :
Dong-Hwan Ko :
Application No. 29/138,569 :
Filed: June 1, 2001 :
Attorney Docket No. TECHVIL-205D :

ON PETITION

This is a decision on the papers styled "Petition To Accord Filing Date," filed on October 22, 2001, which is being treated as a petition under 37 CFR 1.53, requesting that the above-identified application be accorded a filing date of March 16, 2001.

On March 16, 2001, the application was deposited. The filing included, inter alia, a specification and four (4) sheets of drawings.

On October 17, 2001, the Office of Initial Patent Examination (OIPE) mailed a "Notice Of Incomplete Nonprovisional Application" that stated the application had not been accorded a filing date, and that the specification did not include at least one claim in compliance with 35 USC 112.

In response, on October 22, 2001, the instant petition was submitted. Petitioner contends that a claim was present in the application and set forth at the end of the specification under the heading: "Main Point of the Subject Matter Design." Petitioner states that, "the language is based on an English translation that provided the claim but did not specifically include "it is claimed" or other such similar language and is obviously based on the English translation of a foreign document." Furthermore, Petitioner submitted a preliminary amendment on October 22, 2001, to amend the specification with the correct claim language.

A review of the record reveals that no formal claim was included with the application papers deposited March 16, 2001. However, it is noted that the declaration submitted June 1, 2001 includes a statement that the inventor believes himself to be

> "the original, first and sole inventor ... of the subject matter which is claimed and for which a patent is sought on the invention entitled "WARM CURRENT UNITS FOR HEAT EXCHANGER", the specification of which was filed 3/16/2001 as Application Serial Number 29/138,569."

A formal claim was not included with the application when it was deposited. However since this is a design application, the above-quoted language in the declaration can be construed as the claim required by 35 USC 112 insofar as this design application is concerned. The form of a claim in a design application is fixed by rule and is accordingly different from the claims of other applications. Accordingly, since this is a design application and since the claim language quoted above does come at the conclusion, or end, of the specification, there is no statutory prohibition against construing this language as the required statutory claim. It is also clear that there has been, and is, no doubt as to the form of, and what is to be claimed herein since this is a design application for which the form of the claim is set by 37 CFR 1.153. Under the circumstances, it is appropriate that the language quoted above form the declaration be construed as the claim for purposes of according this application a filing date. However, since the declaration in the instant application was filed after the original filing of the application papers, the filing date of the instant application is the date of filing of the declaration, June 1, 2001.

Petitioner is reminded that errors such as occurred herein can result in loss of rights and care must be taken to avoid such.

Accordingly, the petition is dismissed regarding the request for a March 16, 2001 filing date. However, in view of the above, the application will be accorded with a filing date of June 1, 2001.

This application will be returned to OIPE for further processing with a filing date of June 1, 2001. The application will then be forwarded to Technology Center 2900.

Telephone inquiries concerning this matter may be directed to Petitions Attorney Edward Tannouse at (703) 306-9200.

Beverly M. Flanagan
Supervisory Petitions Examiner
Office of Petitions
Office of the Deputy Commissioner
for Patent Examination Policy

UNITED STATES PATENT AND TRADEMARK OFFICE

COMMISSIONER FOR PATENTS
UNITED STATES PATENT AND TRADEMARK OFFICE
P.O. BOX 1450
ALEXANDRIA, VA 22313-1450
www.uspto.gov

Paper No. 18

FULBRIGHT & JAWORSKI, LLP
666 FIFTH AVE.
NEW YORK, NY 10103-3198

COPY MAILED

DEC 3 0 2003

OFFICE OF PETITIONS

In re Application of	:	
Dong-Hwan Ko	:	
Application No. 29/138,569	:	ON PETITION
Filed: June 1, 2001	:	
Attorney Docket No. TECHVIL-205D	:	

This is a decision on the request for reconsideration of petition under 37 CFR 1.53, filed on June 6, 2003, requesting that the above-identified application be accorded a filing date of March 16, 2001.

On March 16, 2001, the application was deposited. The filing included, inter alia, a specification and four (4) sheets of drawings.

On October 17, 2001, the Office of Initial Patent Examination (OIPE) mailed a "Notice Of Incomplete Nonprovisional Application" that stated the application had not been accorded a filing date, and that the specification did not include at least one claim in compliance with 35 USC 112.

In response, on October 22, 2001, the instant petition was submitted. Petitioner contends that a claim was present in the application and set forth at the end of the specification under the heading: "Main Point of the Subject Matter Design." Petitioner states that, "the language is based on an English translation that provided the claim but did not specifically include "it is claimed" or other such similar language and is obviously based on the English translation of a foreign document." Furthermore, Petitioner submitted a preliminary amendment on October 22, 2001, to amend the specification with the correct claim language.

The paper filed March 16, 2001, may be accorded a filing date provided that it complies with the requirements of 35 USC §§ 111 and 112. At issue, here is the requirement of 112 for a claim. The requirement for a claim in a design application is a requirement of the statute. Section 171 of title 35 of the United States Code makes section 112 applicable to design applications. Section 112 requires that the "specification shall conclude with one or more claims..." Thus, the requirement for a claim in a design application is a necessary part of a complete design application.

However since this is a design application, the above-quoted language in the specification can be construed as the claim required by 35 USC 112, second paragraph, insofar as this design application is concerned. The form of a claim in a design application is fixed by rule and is accordingly different from the claims of other applications. Accordingly, since this is a design application and since the claim language quoted above does come at the conclusion, or end, of the specification, there is no statutory prohibition against construing this language as the claim required by statute. It is also clear that there has been, and is, no doubt as to the form of, and what is to be claimed herein since this is a design application for which the form of the claim is set by 37 CFR 1.153. Under the circumstances, it is appropriate that the language quoted above from the specification be construed as the claim for filing date purposes.

Petitioner is reminded that errors such as occurred herein can result in loss of rights and care must be taken to avoid such.

The petition is **granted** to the extent that the language cited in the specification will be construed as a claim.

This application is being forwarded to the Office of Initial Patent Examination for further processing **with a filing date of March 16, 2001**, and for an indication in Office records that the application-as-filed included one (1) claim. The application will then be forwarded to Technology Center 2900.

Telephone inquiries concerning this matter may be directed to Petitions Attorney Edward Tannouse at (703) 306-9200.

Edward J. Tannouse
Petitions Attorney
Office of Petitions
United States Patent and Trademark Office

UNITED STATES PATENT AND TRADEMARK OFFICE

NOV 20 2003

Commissioner for Patents
United States Patent and Trademark Office
P.O. Box 1450
Alexandria, VA 22313-1450
www.uspto.gov

#10

ANDREW G ROZYCKI ESQ
7000 CARDINAL PLACE
DUBLIN, OH 43017

In re Application of	:
John Ewonce	:
Serial No.: 29/138,608	: PETITION DECISION
Filed: March 15, 2001	:
Attorney Docket No.: ALL9043-D	:

This is a decision on applicant's Petition under 37 CFR 1.137(b) to withdraw abandonment filed September 30, 2003.

The petition is **GRANTED**.

This application became abandoned for failure to respond to the Notice to File Missing Parts of Nonprovisional Application, mailed April 10, 2001, which set a two-month shortened statutory period to respond. Upon failure to respond by June 10, 2001, a Notice of Abandonment was mailed July 14, 2003. This petition followed.

A grantable petition under 37 CFR 1.137(b), as revised December 1, 1997, requires four items: (1) a petition and petition fee; (2) a complete response if not earlier made; (3) a statement that the entire period of delay in prosecution was unintentional; and (4) a terminal disclaimer and disclaimer fee. A proper Terminal Disclaimer was submitted by facsimile on November 4, 2003.

The Petition fee of $1300.00 and the terminal disclaimer fee of $110.00 will be charged to applicant's Deposit Account 01-0485, as directed.

The application will be forwarded to an Examiner for initial examination in due course.

Should there be any questions with regard to this letter please contact Sandra Morris; by letter addressed to the Director, Technology Center 3700/2900, PO Box 1450, Alexandria VA 22313-1450; or by telephone at (703) 305-3102 or by facsimile transmission at (703) 305-5679.

John Kittle
Director, Technology Center 3700/2900

UNITED STATES
PATENT AND
TRADEMARK OFFICE

JUL 2 0 2002

UNDER SECRETARY OF COMMERCE FOR INTELLECTUAL PROPERTY AND
DIRECTOR OF THE UNITED STATES PATENT AND TRADEMARK OFFICE
WASHINGTON, D.C. 20231
WWW.USPTO.GOV

#6

ZOOEY C CHU
POST OFFICE BOX 10-69
CHONG HO, TAIPEI 235 TW
TAIWAN

In re Application of	:
Zooey C Chu	:
Serial No.: 29/139,196	: WITHDRAWAL OF ABANDONMENT
Filed: March 23, 2001	:
Attorney Docket No.: 924AAF	:

This is in response to applicant's Petition under 37 CFR 1.181, filed May 7, 2002, based on not having responded to the Office action.

This application was held abandoned based on applicant's failure to timely respond to the Notice of Allowance and Issue Fee Due dated August 23, 2001. As no response was received by November 23, 2001, the application was abandoned. This petition followed.

Applicant has noted that the Patent Office did not use the correct address, which probably caused the Notice of Allowance to not be received. Therefore the Notice of Abandonment is rescinded, and the application is restored to a pending status with this letter. The address has now been corrected.

Applicant's petition under 37 CFR 1.181 is **GRANTED**.

The application will be forwarded to Publication Division for printing as a patent.

Should there be any questions with regard to this letter please contact Sandra Morris by letter addressed to the Director, Technology Center 3700/2900, Washington, DC 20231, or by telephone at (703) 305-3102 or by facsimile transmission at (703) 305-5679.

John Kittle
Director, Technology Center 3700/2900

UNITED STATES PATENT AND TRADEMARK OFFICE

COMMISSIONER FOR PATENTS
UNITED STATES PATENT AND TRADEMARK OFFICE
WASHINGTON, D.C. 20231
www.uspto.gov

Paper No. 9

R. Gale Rhodes, Jr.
c/o Thomason, Moser & Patterson LLP
595 Shrewsbury Avenue
Shrewsbury, NJ 07702

COPY MAILED

SEP 03 2002

OFFICE OF PETITIONS

In re Application of	:	
Britten et al.	:	
Application No. 29/139,413	:	ON PETITION
Filed: March 29, 2001	:	
Attorney Docket No. 15247Des	:	

This is a decision on the petition under 37 CFR 1.137(a), filed August 5, 2002, to revive the above-identified application. The petition is also being treated under 37 CFR 1.181 (no fee) as a petition to withdraw the holding of abandonment.

The petition is **granted.**

The above-identified application became abandoned for failure to submit the issue fee in a timely manner in reply to the Notice of Allowance mailed January 28, 2002, which set a statutory period for reply of three (3) months. Accordingly, the above-identified application became abandoned on April 29, 2002.

Petitioner contends the issue fee was mailed on February 8, 2002. Petitioner has submitted a showing in compliance with 37 CFR 1.8(b).

The Notice of Abandonment is hereby vacated and the holding of abandonment withdrawn.

Since the petition has been granted under 37 C.F.R. § 1.181, the petitioner's request to have the petition considered under 37 C.F.R. §1.137(a) is dismissed as moot. No petition fee is required for a petition to withdraw holding of abandonment under 37 C.F.R. §1.181. Therefore, the petition fee and the terminal disclaimer fee will be scheduled for a refund. The terminal disclaimer will not be entered.

The file is being forwarded to Publications Division for processing into a patent.

Telephone inquiries should be directed to Petitions Attorney Steven Brantley at (703) 306-5683.

Charles Steven Brantley
Petitions Attorney
Office of Petitions
Office of the Deputy Commissioner
for Patent Examination Policy

UNITED STATES
PATENT AND
TRADEMARK OFFICE

NOV 15 2002

UNDER SECRETARY OF COMMERCE FOR INTELLECTUAL PROPERTY AND

DIRECTOR OF THE UNITED STATES PATENT AND TRADEMARK OFFICE
WASHINGTON, D.C. 20231
WWW.USPTO.GOV

#5

RAY K. SHAHANI, ESQ.
ATTORNEY AT LAW
TWIN OAKS OFFICE PLAZA
477 NINTH AVENUE, SUITE 112
SAN MATEO CA 94402-1854

In re Application of	:
Michael J. Hall, et al.	:
Serial No.: 29/140,102	: PETITION DECISION
Filed: April 11, 2001	:
Docket No.: CLX-10X-D2	:

This is a decision on applicant's Petition under 37 CFR 1.137(b) to withdraw abandonment filed August 23, 2002.

The petition is **GRANTED**.

This application became abandoned for failure to respond to the Notice to File Missing Parts of Nonprovisional Application, filing date granted mailed May 23, 2001, which set a two-month statutory period for response. Upon failure to respond by July 23, 2001, the case was abandoned. This petition followed.

A grantable petition under 37 CFR 1.137(b), as revised December 1, 1997, requires four items: (1) a petition and petition fee; (2) a complete response if not earlier made; (3) a statement that the entire period of delay in prosecution was unintentional; and (4) a terminal disclaimer and disclaimer fee. A terminal disclaimer was received by facsimile on November 4, 2002. A review of the file history shows that applicant has satisfied all of the requirements of a petition under 37 CFR 1.137(b).

The application will be forwarded to an Examiner after initial processing of the application.

The Terminal Disclaimer fee of $110.00 will be charged to applicant's Deposit Account 03-2270, as directed.

Should there be any questions with regard to this letter please contact Sandra Morris, by letter addressed to the Director, Technology Center 3700/2900, Washington, DC 20231, or by telephone at (703) 305-3102 or by facsimile transmission at (703) 305-5679.

John Kittle
Director, Technology Center 3700/2900

UNITED STATES PATENT AND TRADEMARK OFFICE

COMMISSIONER FOR PATENTS
UNITED STATES PATENT AND TRADEMARK OFFICE
WASHINGTON, D.C. 20231
www.uspto.gov

Paper No. 11

PATENT ADMINSTRATOR
KATTEN MUCHIN ZAVIS ROSENMAN
525 WEST MONROE STREET
SUITE 1600
CHICAGO, IL 60661-3693

COPY MAILED

OCT 0 2 2002

OFFICE OF PETITIONS

In re Application of :
Landry :
Application No. 29/140,664 : DECISION GRANTING PETITION
Filed: April 23, 2001 :
Attorney Docket No. 213202.00291 :

This is a decision on the "Request for Corrected Official Filing Receipt" filed June 12, 2001, which is being treated as a petition under 37 CFR 1.182 to establish the application was deposited on April 23, 2001. This is also a decision on the petition under 37 CFR 1.53 filed September 3, 2002, to withdraw the Notice of Incomplete Application and to accord the above-identified application a filing date of April 23, 2001.

The petition under 37 CFR 1.182 is **granted**.

The petition under 37 CFR 1.53 is **granted**.

Petitioner has submitted a postcard receipt stamped April 23, 2001. Therefore, petitioner has established the application was deposited on April 23, 2001, rather than April 24, 2001.

The requirement for a claim in a design application is a statutory requirement. Section 171 of title 35 of the United States Code makes section 112 applicable to design applications. Section 112 requires that the "specification shall conclude with one or more claims..." Thus, the requirement for a claim in a design application is not pro forma, but is a necessary part of a complete design application.

A review of the record reveals that the specification concludes with the sentences,

> The design comprises the features of ornament and pattern of the sheet material shown in the drawings in which Fig. 1 depicts a first embodiment of the design; Fig. 2 depicts a second embodiment of the design; and Figure 3 depicts a third embodiment of the design. The dashed lines in the drawings form no part of the claimed design, but represent the boundaries of the claimed design and indicate that the design repeats indefinitely in the horizontal and/or vertical directions.

A formal claim in compliance with Office rules was not included with the application when it was deposited. The claim includes improper punctuation (two periods), does not commence on a separate page, and does not follow the form set by 37 CFR 1.153. The Office will construe the "claim" as including both sentences. If the second sentence were not construed to be part of a claim, then the specification would not <u>conclude</u> with one or more claims. There is no statutory form for claims, and the Office may accept the claim as presented and quoted above for purposes

of assigning a filing date to the application.[1]

Since the petition was necessitated by petitioner's failure to comply with 37 CFR 1.153, a petition fee of $130 will be charged to petitioner's deposit account.

The Application is being returned to the Office of Initial Patent Examination to accord the application a filing date of April 23, 2001, and for further processing using the application papers filed on April 23, 2001.

Telephone inquiries should be directed to Petitions Attorney Steven Brantley at (703) 306-5683.

Charles Steven Brantley
Senior Petitions Attorney
Office of Petitions
Office of the Deputy Commissioner
for Patent Examination Policy

[1] It should be noted that the form of a claim in a design application is fixed by rule and is accordingly different from the claims of other applications. It is clear that there has been, and is, no doubt as to the form of, and what is to be claimed herein since this is a design application for which the form of the claim is set by 37 CFR 1.153. Under the circumstances, it is appropriate that the language cited be construed as the claim for filing date purposes.

UNITED STATES PATENT AND TRADEMARK OFFICE

COMMISSIONER FOR PATENTS
UNITED STATES PATENT AND TRADEMARK OFFICE
P.O. BOX 1450
ALEXANDRIA, VA 22313-1450
www.uspto.gov

Paper No. 9

BURNS DOANE SWECKER & MATHIS L L P
POST OFFICE BOX 1404
ALEXANDRIA VA 22313-1404

COPY MAILED

NOV 1 8 2003

OFFICE OF PETITIONS

In re Application of
Chow, et al.
Application No. 29/142,503
Filed: May 24, 2001
Attorney Docket No. 007198-406
For: CD RACK

DECISION
ON PETITION

This is a decision on the reconsideration petition under 37 CFR 1.137(b), filed May 13, 2003, to revive the above-identified application. The petition will also be treated as a petition under 37 CFR 1.183 to waive 37 CFR 1.137(d), insofar as it requires the terminal disclaimer period to be the entire period of abandonment.

This application became abandoned for failure to timely reply to the Notice to File Missing Parts of Nonprovisional Application mailed June 13, 2001, which set a two month shortened statutory period for reply. No extensions of time having been obtained pursuant to 37 CFR 1.136(a), this application became abandoned on August 14, 2001 for failing to submit an executed declaration and surcharge. A Notice of Abandonment was mailed on July 30, 2002.

Petitioners have submitted a reply in the form of the surcharge and a declaration, an acceptable statement of the unintentional nature of the delay in responding to the June 13, 2001 Notice, an acceptable terminal disclaimer and fee, and the petition fee.

The petition under 37 CFR 1.137(b) is **GRANTED**.

Petitioners request that the length of the period disclaimed be adjusted to take into consideration the delay in addressing the first petition to revive, filed June 26, 2002. While it was petitioners' responsibility to file a complete petition to revive, including a terminal disclaimer, on June 26, 2002, the Office delayed dismissing the petition until April 8, 2003. The Office should have mailed a dismissal within three months of receiving the original petition, instead of mailing a dismissal 10 months after receiving the original petition. It is noted that petitioners promptly filed a grantable petition on May 13, 2003 after receiving the April 8, 2003 dismissal.

In the interests of justice, a portion of the total period of abandonment has been rescinded due to Patent and Trademark Office delay. The period disclaimed will be the period from the initial abandonment, August 14, 2001, through the date the grantable petition was filed, May 13, 2003 minus 7 months (which is the 10 months the Office took to mail the April 8, 2003 dismissal minus the three months it should have taken). In other words, the total period disclaimed is 14 months.

The petition under 37 CFR 1.183 to partially waive 37 CFR 1.137(d) is **GRANTED**.

Regarding finances, pursuant to petitioners' authorization, deposit account no. 02-4800 will be charged a $130 fee for the petition under 37 CFR 1.183.

After the mailing of this decision the application will be forwarded to the Office of Initial Patent Examination for further processing.

Telephone inquiries concerning this decision should be directed to the undersigned at (703) 308-6712.

E. Shirene Willis

E. Shirene Willis
Senior Petitions Attorney
Office of Petitions

UNITED STATES PATENT AND TRADEMARK OFFICE

COMMISSIONER FOR PATENTS
UNITED STATES PATENT AND TRADEMARK OFFICE
WASHINGTON, D.C. 20231
www.uspto.gov

Paper No. 6

BURNS DOANE SWECKER & MATHIS L L P
POST OFFICE BOX 1404
ALEXANDRIA VA 22313-1404

COPY MAILED

APR 0 8 2003

OFFICE OF PETITIONS

In re Application of
Chow, et al.
Application No. 29/142,503
Filed: May 24, 2001
Attorney Docket No. 007198-406
For: CD RACK

DECISION ON PETITION

This is a decision on the petition under 37 CFR 1.137(b), filed June 26, 2002, to revive the above-identified application.

The petition is **dismissed**.

Any request for reconsideration of this decision must be submitted within TWO (2) MONTHS from the mail date of this decision. Extensions of time under 37 CFR 1.136(a) are permitted. The reconsideration request should include a cover letter entitled "Renewed Petition under 37 CFR 1.137(b)." Petitioners are advised that this is not a final agency decision.

This application became abandoned for failure to timely reply to the Notice to File Missing Parts of Nonprovisional Application mailed June 13, 2001, which set a two month shortened statutory period for reply. No extensions of time having been obtained pursuant to 37 CFR 1.136(a), this application became abandoned on August 14, 2001 for failing to submit an executed declaration and surcharge. A Notice of Abandonment was mailed on July 30, 2002.

A grantable petition pursuant to 37 CFR 1.137(b) must be accompanied by:

(1) the required reply, unless previously filed. In a nonprovisional application abandoned for failure to prosecute, the required reply may be met by the filing of a continuing application. In an application or patent, abandoned or lapsed for failure to pay the issue fee or any portion thereof, the required reply must be the payment of the issue fee or any outstanding balance thereof;

(2) the petition fee as set forth in 37 CFR 1.17(m);

(3) a statement that the **entire** delay in filing the required reply from the due date for the reply until the filing of a grantable petition pursuant to 37 CFR 1.137(b) was unintentional. The Commissioner may require additional information where there is a question whether the delay was unintentional; and

(4) any terminal disclaimer (and fee set forth in 37 CFR 1.20(d)) required pursuant to 37 CFR 1.137(d).

The instant petition does not satisfy requirement (4) above.

37 CFR 1.137(d) requires that a petition under 37 CFR 1.137(b) be accompanied by a terminal disclaimer and fee regardless of the period of abandonment in a design application. This application is a design application. Thus, petitioners are required to submit a terminal disclaimer. A blank terminal disclaimer form is enclosed for petitioners' convenience.

Telephone inquiries concerning this decision should be directed to the undersigned at (703) 308-6712.

Further correspondence with respect to this matter should be addressed as follows:

By mail until 05/01/03: Commissioner for Patents
Box DAC
Washington, D.C. 20231

By mail on or after 05/01/03: Mail Stop PETITION
Commissioner for Patents
P.O. Box 1450
Alexandria, VA 22313-1450

By facsimile: (703) 308-6916
Attn: Office of Petitions

By hand: Office of Petitions
2201 South Clark Place
Crystal Plaza 4, Suite 3C23
Arlington, VA 22202

E. Shirene Willis

E. Shirene Willis
Senior Petitions Attorney
Office of Petitions

enclosures: blank Terminal Disclaimer to Accompany Petition -- PTO/SB/63

Privacy Act Statement

UNITED STATES PATENT AND TRADEMARK OFFICE

Commissioner for Patents
United States Patent and Trademark Office
P.O. Box 1450
Alexandria, VA 22313-1450
www.uspto.gov

JUN 17 2004

MARK WISNER
WISNER & ASSOCIATES
1177 WEST LOOP SOUTH, SUITE 400
HOUSTON, TX 77027

#5

In re Application of	:
Ian Stuart Smith et al.	:
Serial No.: 29/142,834	: PETITION DECISION
Filed: June 1, 2001	:
Attorney Docket No.: FORA,021	:

This is in response to applicants' Petition to Revive Unintentionally Abandoned Application under 37 CFR 1.137(b), which is being treated as a Petition to Withdraw Abandonment under 37 CFR 1.181, filed April 8, 2004 based on failure to receive the office action mailed July 2, 2001.

A review of the file history shows that the Office mailed a Notice to File Missing Parts on July 2, 2001, setting a two-month period to submit a signed declaration and a fee. As no response was received, a Notice of Abandonment was mailed on March 11, 2003. This petition followed.

Applicant has stated that he did respond to the Notice on July 30, 2001; however, this copy has never been associated with the application. Applicant should submit a copy of said response with the Certificate of Mailing, along with the change of address, for this petition to be granted. If applicant cannot produce a copy of the response, a Petition under 37 CFR 1.137(b) would be appropriate.

A petition under 37 CFR 1.137(b) for revival of an application abandoned unintentionally must be filed promptly after applicant becomes aware of the abandonment of the application. The petition must be accompanied by (1) a verified statement that the application was abandoned unintentionally for the entire period of abandonment, (2) by the petition fee of $1300.00 for a small entity, (3) by a full and complete response to the last Office action and (4) by a terminal disclaimer and fee therefor of $110.00. Applicant's response lacks items (3) and (4). A signed declaration with the surcharge must be submitted, as well as a terminal disclaimer.

Applicants' petition is **DISMISSED** without prejudice to the filing of a renewed petition. Any renewed petition must be filed within TWO MONTHS of the mailing date of this decision in order to be considered timely.

Should there be any questions with respect to this decision, please contact Sandra Morris; by mail addressed to: Director, Technology Center 3700/2900, P.O. Box 1450, Alexandria, VA 22313-1450; or by telephone at (571) 272-2622.

John Kittle
Director, Technology Center 3700/2900

UNITED STATES PATENT AND TRADEMARK OFFICE

SEP 24 2004

Commissioner for Patents
United States Patent and Trademark Office
P.O. Box 1450
Alexandria, VA 22313-1450
www.uspto.gov

MARK WISNER
WISNER & ASSOCIATES
1177 WEST LOOP SOUTH, SUITE 400
HOUSTON, TX 77027

#7

In re Application of	:
Ian Stuart Smith et al.	:
Serial No.: 29/142,834	: PETITION DECISION
Filed: June 1, 2001	:
Attorney Docket No.: FORA,021	:

This is a decision on applicant's renewed Petition for Withdrawal of Notice of Abandonment under 37 CFR 1.181 submitted August 17, 2004, to revive an unavoidably abandoned application. Again, applicant should file a Change of Address for future correspondence to be mailed to the "West Loop" address.

This application became abandoned for failure to respond to the Notice to File Missing Parts mailed July 2, 2001, which set a two-month statutory period to respond. As no response was received, a Notice of Abandonment was mailed March 11, 2003. Applicant filed a Petition under 37 CFR 1.137(b) which was dismissed; this petition followed.

Applicant has submitted a copy of the Response to the Notice to File Missing Parts, which includes a Certificate of Mailing date of July 30, 2001. Even though this paper was not associated with the application, it is clear that applicant timely responded, and the case will be returned to pending status.

Applicant's petition is **GRANTED.**

The application will be forwarded to an Examiner after initial processing of the application in due course.

Should there be any questions with respect to this decision, please contact Sandra Morris; by mail addressed to: Director, Technology Center 3700/2900, P.O. Box 1450, Alexandria, VA 22313-1450; or by telephone at (571) 272-2622.

John Kittle
Director, Technology Center 3700/2900

UNITED STATES PATENT AND TRADEMARK OFFICE

AUG 10 2004

Commissioner for Patents
United States Patent and Trademark Office
P.O. Box 1450
Alexandria, VA 22313-1450
www.uspto.gov

#5

MARK WISNER
WISNER & ASSOCIATES
1177 WEST LOOP SOUTH, SUITE 400
HOUSTON, TX 77027

In re Application of	:
Ian Stuart Smith et al.	:
Serial No.: 29/142,836	: PETITION DECISION
Filed: June 1, 2001	:
Attorney Docket No.: FORA,022	:

This is in response to applicants' Petition to Revive Unintentionally Abandoned Application under 37 CFR 1.137(b), which is being treated as a Petition to Withdraw Abandonment under 37 CFR 1.181, filed April 8, 2004 based on failure to receive the office action mailed July 2, 2001.

A review of the file history shows that the Office mailed a Notice to File Missing Parts on July 2, 2001, setting a two-month period to submit a signed declaration and a fee. As no response was received, a Notice of Abandonment was mailed on March 11, 2003. This petition followed.

Applicant has stated that he did respond to the Notice on July 30, 2001; however, this copy has never been associated with the application. Applicant should submit a copy of said response with the Certificate of Mailing, along with the change of address, for this petition to be granted. If applicant cannot produce a copy of the response, a Petition under 37 CFR 1.137(b) would be appropriate.

A petition under 37 CFR 1.137(b) for revival of an application abandoned unintentionally must be filed promptly after applicant becomes aware of the abandonment of the application. The petition must be accompanied by (1) a verified statement that the application was abandoned unintentionally for the entire period of abandonment, (2) by the petition fee of $1300.00 for a small entity, (3) by a full and complete response to the last Office action and (4) by a terminal disclaimer and fee therefor of $110.00. Applicant's response lacks items (3) and (4). A signed declaration with the surcharge must be submitted, as well as a terminal disclaimer.

Applicants' petition is **DISMISSED** without prejudice to the filing of a renewed petition. Any renewed petition must be filed within TWO MONTHS of the mailing date of this decision in order to be considered timely.

Should there be any questions with respect to this decision, please contact Sandra Morris; by mail addressed to: Director, Technology Center 3700/2900, P.O. Box 1450, Alexandria, VA 22313-1450; or by telephone at (571) 272-2622.

John Kittle
Director, Technology Center 3700/2900

UNITED STATES PATENT AND TRADEMARK OFFICE

NOV 22 2004

Commissioner for Patents
United States Patent and Trademark Office
P.O. Box 1450
Alexandria, VA 22313-1450
www.uspto.gov

MARK WISNER
WISNER & ASSOCIATES
1177 WEST LOOP SOUTH, SUITE 400
HOUSTON, TX 77027

In re Application of	:
Ian Stuart Smith et al.	:
Serial No.: 29/142,836	: PETITION DECISION
Filed: June 1, 2001	:
Attorney Docket No.: FORA,022	:

This is in response to applicants' renewed Petition to Withdraw Abandonment under 37 CFR 1.181, filed September 17, 2004 based on failure to receive the office action mailed July 2, 2001.

A review of the file history shows that the Office mailed a Notice to File Missing Parts on July 2, 2001, setting a two-month period to submit a signed declaration and a fee. As no response was received, a Notice of Abandonment was mailed on March 11, 2003. Applicant filed a petition April 8, 2004 which was dismissed, as applicant did not provide proof that the response was submitted.

Applicant has provided a copy of the response, which included a Certificate of Mailing date of July 30, 2001; therefore, the response was timely filed.

Applicants' petition is **GRANTED.**

The application will be promptly forwarded to be processed as an application in due course.

The $130.00 surcharge for filing a late declaration will be charged to applicants' Deposit Account 50-0965 (FORA,021), as directed.

Should there be any questions with respect to this decision, please contact Sandra Morris; by mail addressed to: Director, Technology Center 3700/2900, P.O. Box 1450, Alexandria, VA 22313-1450; or by telephone at (571) 272-2622.

John Kittle
Director, Technology Center 3700/2900

UNITED STATES PATENT AND TRADEMARK OFFICE

COMMISSIONER FOR PATENTS
UNITED STATES PATENT AND TRADEMARK OFFICE
P.O. BOX 1450
ALEXANDRIA, VA 22313-1450
www.uspto.gov

JAMES A. LARSON
MERCHANT & GOULD P.C.
P.O. BOX 2903
MINNEAPOLIS, MN 55402-0903

NOV 13 2003

#18

In re Application of	:
Ronald J. Scherer et al.	:
Application No. 29/143748	: PETITION DECISION
Filed: June 19, 2001	:
Attorney Docket No. 3616.209US01	:

This is a decision on the petition under 37 CFR 1.144, filed May 6, 2003, requesting withdrawal of the examiner's restriction requirement with respect to Figures 1 through 18.

The petition is **Dismissed**.

A review of the file reveals that restriction under 35 U.S.C. 121 was required between six groups of embodiments of the design for a front portion for a retaining wall block in the first Office action mailed January 23, 2002. In the amendment and response filed July 23, 2002, applicant elected the embodiment of Group I with traverse stating that the embodiments illustrated in Figures 1 through 18, Groups I, II and III, constitute different embodiments of a single design invention, and the embodiments are not patentably distinct from each other. Applicant cited the decision of *In re Kelly,* 200 USPQ 560 (Comm'r 1978) in support of their position that the restriction is improper and requested withdrawal of the requirement. The response also requested cancellation of Figures 19 through 36 directed to the embodiments in Groups IV, V and VI. In the second Office action mailed September 26, 2002, the examiner acknowledged the election of Group I with traverse, but treated such election without traverse holding that applicant did not distinctly and specifically point out the supposed errors in the restriction requirement. The action also stated that a complete reply must include cancellation of nonelected Groups II and III, directed to figures 7 through 18. Subsequently, an amendment and response was filed on December 11, 2002, canceling Figures 7 through 18 directed to Groups II and III. The response did not address or contest the examiner's holding of the election without traverse set forth in the second Office action. A Notice of Allowability was mailed on February 6, 2003. This petition followed.

The petition states that the restriction is improper since applicant admitted on the record that the embodiments of Figures 1 through 18 are not patentably distinct from each other and relies on the decision of *In re Kelly, supra* in support thereof. Further, the petition states that applicants did request reconsideration of the restriction requirement, as required by 37 CFR 1.144. In addition, the petition states that the examiner's treatment of applicants' election as being without traverse was improper.

37 CFR 1.144 states that "After a final requirement for restriction, the applicant, ... may petition the Commissioner to review the requirement." Since the requirement for restriction was never made "final" as required by § 1.144 the present petition is seen to be premature. Furthermore, the cancellation of Figures 7 through 18 and failure to address or contest the examiner's holding of the election without traverse in the response filed December 11, 2002, is considered an acquiescence to the examiner's holding and a loss of right to petition under 37 CFR 1.144. While § 1.144 does allow for a petition to be filed after allowance of claims to the invention elected, this provision does not relieve applicants of their responsibility to address and traverse the examiner's holding of the election without traverse in the response filed December 11, 2002.

Since applicants did not preserve their right to petition under 37 CFR 1.144 due to their failure to address and traverse the examiner's holding of the election without traverse in the response filed December 11, 2002, it is unnecessary to determine whether the restriction is improper in view of applicants' admission on the record that the embodiments of Figures 1 through 18 are not patentably distinct from each other.

However, since Figures 7 through 18 have been reinstated by way of preliminary amendment accompanying the request for continued prosecution application, the examiner must reevaluate the restriction requirement in view of applicants' admission on the record.

The application will be forwarded to the examiner for further examination per the request for continued prosecution application.

Should there be any questions with regard to this letter please contact James Gandy, by letter addressed to the Director, Technology Center 3700/2900, P.O. Box 1450 Alexandria, VA 22313-1450, or by telephone at (703) 305-3264.

John Kittle
Director, Technology Center 3700/2900

UNITED STATES PATENT AND TRADEMARK OFFICE

OCT 24 2003

Commissioner for Patents
United States Patent and Trademark Office
P.O. Box 1450
Alexandria, VA 22313-1450
www.uspto.gov

JACK V MUSGROVE
2911 BRIONA WOOD LANE
CEDAR PARK, TX 78613

In re Application of	:
Joe T. Minarovic	:
Serial No.: 29/144,001	: PETITION DECISION
Filed: June 22, 2001	:
Attorney Docket No.: DM-174 US	:

This is a decision on applicant's petition to revive patent application under 37 CFR 1.137(a), which is being treated as a Petition under 37 CFR 1.181 filed on September 15, 2003, to revive an unavoidably abandoned application.

This application became abandoned for failure to respond to the Notice of Allowance, mailed December 18, 2001, which set a three-month statutory period to submit the Issue Fee. As no received by March 18, 2003, the application was abandoned. A change of address was received January 29, 2002, and a Notice of Abandonment was mailed July 31, 2002. Applicant then filed this petition.

The Notice of Allowance and Issue Fee Due were mailed to applicant's previous address; as a Certificate of Mailing was enclosed with a date of November 7, 2001, the Patent Office should have remailed the Notice immediately. Therefore, as the Change of Address was timely filed, and the application was abandoned in error, a Petition under 37 CFR 1.181 would be appropriate.

As there are no fees associated with Petitions granted under 37 CFR 1.181, the petition fee will not be charged to Applicant's Deposit Account.

Applicant's petition is **GRANTED.**

The application will be forwarded to Publication Division for printing as a patent in due course.

Should there be any questions with respect to this decision, please contact Sandra Morris; by mail addressed to: Director, Technology Center 3700/2900, P.O. Box 1450, Alexandria, VA 22313-1450; or by telephone at (703) 305-3102 or by facsimile transmission at (703) 305-5679.

John Kittle
Director, Technology Center 3700/2900

UNITED STATES PATENT AND TRADEMARK OFFICE

Commissioner for Patents
United States Patent and Trademark Office
P.O. Box 1450
Alexandria, VA 22313-1450
www.uspto.gov

MAILED

APR 2 0 2010

OFFICE OF PETITIONS

PATZIK, FRANK & SAMOTNY LTD.
150 SOUTH WACKER DRIVE
SUITE 1500
CHICAGO IL 60606

In re Application of	:	
NEWPORT, Colin	:	
Application No. 29/144,276	:	DECISION ON PETITION
Filed: June 28, 2001	:	TO WITHDRAW
Attorney Docket No. **408091-005**	:	FROM RECORD
	:	

This is a decision on the Request to Withdraw as attorney or agent of record under 37 C.F.R. § 1.36(b), filed February 23, 2010.

The request is **APPROVED**.

A grantable request to withdraw as attorney/agent of record must be signed by every attorney/agent seeking to withdraw or contain a clear indication that one attorney is signing on behalf of another/others. The Office requires the practitioner(s) requesting withdrawal to certify that he, she, or they have: (1) given reasonable notice to the client, prior to the expiration of the response period, that the practitioner(s) intends to withdraw from employment; (2) delivered to the client or a duly authorized representative of the client all papers and property (including funds) to which the client is entitled; and (3) notified the client of any responses that may be due and the time frame within which the client must respond, pursuant 37 CFR 10.40(c).

The request was signed by Max Shaftal on behalf of all attorneys of record who are associated with customer No. 51500. All attorneys/agents associated with the Customer Number 51500 have been withdrawn. Applicant is reminded that there is no attorney of record at this time.

The correspondence address of record remains unchanged.

Telephone inquiries concerning this decision should be directed to Tredelle Jackson at 571-272-2783.

/Tredelle D. Jackson/
Paralegal Specialist
Office of Petitions

UNITED STATES PATENT AND TRADEMARK OFFICE

Commissioner for Patents
United States Patent and Trademark Office
P.O. Box 1450
Alexandria, VA 22313-1450
www.uspto.gov

BLUMENFELD, KAPLAN &
SANDWEISS, P.C.
168 NORTH MERAMEC
4TH FLOOR
CLAYTON, MO 63105-3763

COPY MAILED
OCT 0 2 2006
OFFICE OF PETITIONS

In re Application of

James P. Kemp

Application No. 29/144,509

Filed: July 2, 2001

Attorney Docket No. 13546-1

DECISION ON PETITION

This is a decision on the petition under 37 CFR 1.137(b), filed July 14, 2006, to revive the above-identified application.

The petition under 37 CFR 1.137(b) is **GRANTED**.

The above-cited application became abandoned for failure to reply in a timely manner to the Notice of Allowance and Issue Fee Due mailed June 24, 2002, which set a statutory period for reply of three (3) months from its mailing date. Accordingly, the application became abandoned on September 24, 2002. A Notice of Abandonment was mailed on July 29,2 003.

The terminal disclaimer, filed July 14, 2006, is noted.

The issue fee payment is noted as being received on July 14, 2006.

The above-identified application has been abandoned for an extended period of time. The Patent and Trademark Office is relying on petitioner's duty of candor and good faith and accepting the statement that the entire delay in filing the required reply form the due date for the reply until the filing of a grantable petition pursuant to 37 CFR 1.137(b) was unintentional. See Changes to Patent Practice and Procedure, 62 Fed. Reg. at 53160 and 53178; 1203 Off. Gaz. Pat. Office at 88 and 103 (responses to comments 64 and 109) (applicant obligated under 37 CFR 10.18 to inquire into the underlying facts and circumstances when providing the statement required by 37 CFR 1.137(b) to the Patent and Trademark Office.

It is not apparent whether the person signing the statement of unintentional delay was in a position to have firsthand or direct knowledge of the facts and circumstances of the delay at issue. Nevertheless, such statement is being treated as having been made as the result of a reasonable inquiry into the facts and circumstances of such delay. See 37 CFR 10.18(b) and Changes to Patent Practice and Procedure; Final Rule Notice, 62 Fed. Reg. 53131, 53178 (October 10, 1997), 1203 Off. Gaz. Pat. Office 63, 103 (October 21, 1997). In the event that

such an inquiry has not been made, petitioner must make such an inquiry. If such inquiry results in the discovery that it is not correct that the entire delay in filing the required reply from the due date for the reply until the filing of a grantable petition pursuant to 37 CFR 1.137(b) was unintentional, petitioner must notify the Office.

There is no indication that the person signing the instant petition was ever given a power of attorney or authorization of agent to prosecute the above-identified application. If the person signing the instant petition desires to receive future correspondence regarding this application, the appropriate power of attorney or authorization of agent must be submitted. While a courtesy copy of this decision is being mailed to the person signing the instant petition, all future correspondence will be directed to the address of currently of record until such time as appropriate instructions are received to the contrary.

The application is being forwarded to the Office of Patent Publications for further processing.

Telephone inquiries concerning this decision should be directed to the undersigned at (571) 272-3222.

Kenya A. McLaughlin
Petitions Attorney
Office of Petitions

cc:

Matthew A. Rosenberg
One US Bank Plaza, 35th Floor
St. Louis, MO 63101

#17

UNITED STATES PATENT AND TRADEMARK OFFICE

Commissioner for Patents
United States Patent and Trademark Office
P.O. Box 1450
Alexandria, VA 22313-1450
www.uspto.gov

BLUMENFELD, KAPLAN &
SANDWEISS, P.C.
168 NORTH MERAMEC
4TH FLOOR
CLAYTON, MO 63105-3763

COPY MAILED
OCT 0 2 2006
OFFICE OF PETITIONS

In re Application of

James P. Kemp

Application No. 29/144,509

Filed: July 2, 2001

Attorney Docket No. 13546-1

DECISION ON PETITION

This is a decision on the petition under 37 CFR 1.137(b), filed July 14, 2006, to revive the above-identified application.

The petition under 37 CFR 1.137(b) is **GRANTED**.

The above-cited application became abandoned for failure to reply in a timely manner to the Notice of Allowance and Issue Fee Due mailed June 24, 2002, which set a statutory period for reply of three (3) months from its mailing date. Accordingly, the application became abandoned on September 24, 2002. A Notice of Abandonment was mailed on July 29,2 003.

The terminal disclaimer, filed July 14, 2006, is noted.

The issue fee payment is noted as being received on July 14, 2006.

The above-identified application has been abandoned for an extended period of time. The Patent and Trademark Office is relying on petitioner's duty of candor and good faith and accepting the statement that the entire delay in filing the required reply form the due date for the reply until the filing of a grantable petition pursuant to 37 CFR 1.137(b) was unintentional. See Changes to Patent Practice and Procedure, 62 Fed. Reg. at 53160 and 53178; 1203 Off. Gaz. Pat. Office at 88 and 103 (responses to comments 64 and 109) (applicant obligated under 37 CFR 10.18 to inquire into the underlying facts and circumstances when providing the statement required by 37 CFR 1.137(b) to the Patent and Trademark Office.

It is not apparent whether the person signing the statement of unintentional delay was in a position to have firsthand or direct knowledge of the facts and circumstances of the delay at issue. Nevertheless, such statement is being treated as having been made as the result of a reasonable inquiry into the facts and circumstances of such delay. See 37 CFR 10.18(b) and Changes to Patent Practice and Procedure; Final Rule Notice, 62 Fed. Reg. 53131, 53178 (October 10, 1997), 1203 Off. Gaz. Pat. Office 63, 103 (October 21, 1997). In the event that

such an inquiry has not been made, petitioner must make such an inquiry. If such inquiry results in the discovery that it is not correct that the entire delay in filing the required reply from the due date for the reply until the filing of a grantable petition pursuant to 37 CFR 1.137(b) was unintentional, petitioner must notify the Office.

There is no indication that the person signing the instant petition was ever given a power of attorney or authorization of agent to prosecute the above-identified application. If the person signing the instant petition desires to receive future correspondence regarding this application, the appropriate power of attorney or authorization of agent must be submitted. While a courtesy copy of this decision is being mailed to the person signing the instant petition, all future correspondence will be directed to the address of currently of record until such time as appropriate instructions are received to the contrary.

The application is being forwarded to the Office of Patent Publications for further processing.

Telephone inquiries concerning this decision should be directed to the undersigned at (571) 272-3222.

Kenya A. McLaughlin

Kenya A. McLaughlin
Petitions Attorney
Office of Petitions

cc:

Matthew A. Rosenberg
One US Bank Plaza, 35th Floor
St. Louis, MO 63101

UNITED STATES PATENT AND TRADEMARK OFFICE

JAN 12 2005

COMMISSIONER FOR PATENTS
UNITED STATES PATENT AND TRADEMARK OFFICE
P.O. BOX 1450
ALEXANDRIA, VA 22313-1450
www.uspto.gov

William A. Webb
BRINKS HOFER GILSON & LIONE
P.O. BOX 10395
CHICAGO IL 60610

In re Application of	
Hanspeter Leins	:
Serial No.: 29/145,015	:
Filed: July 13, 2001	: PETITION DECISION
Attorney Docket No.: 8338/19	:
	:

This is in response to applicant's letter, which is being treated as a Petition to Withdraw Abandonment under 37 CFR 1.181, received August 30, 2004, based on having responded to the Office action. The extreme delay in acting upon this petition is regretted.

A review of the file history shows that an Office action was mailed November 7, 2001, setting a three month shortened statutory period to respond. As no response was received by February 7, 2001, the application was abandoned.

Applicant has provided a copy of the response, which included a Certificate of Mailing date of March 11, 2002 and a two month extension of time. Therefore, the response was timely filed, and the Office in error abandoned the application.

Applicant's petition is **GRANTED.**

The application will be promptly forwarded to the Examiner for evaluation of applicant's response in due course.

Should there be any questions with respect to this decision, please contact Sandra Morris; by mail addressed to: Director, Technology Center 3700/2900, P.O. Box 1450, Alexandria, VA 22313-1450; or by telephone at (571) 272-2622.

John Kittle
Director, Technology Center 3700/2900

UNITED STATES PATENT AND TRADEMARK OFFICE

Commissioner for Patents
United States Patent and Trademark Office
P.O. Box 1450
Alexandria, VA 22313-1450
www.uspto.gov

Paper No. 10

Rabin & Champagne, PC
1101 14th Street, NW
Suite 500
Washington, DC 20005

COPY MAILED

SEP 16 2003

OFFICE OF PETITIONS

In re Application of Tanaka et al. Application No. 29/145,271 Filed: July 20, 2001 Attorney Docket No. NAKA 105	DECISION GRANTING PETITION

This is a decision on the petition filed June 28, 2003, requesting that the above-identified application be accorded a filing date of July 20, 2001, instead of the current filing date of March 15, 2002.

On July 20, 2001, applicants deposited the above-identified application. However, on January 16, 2002, the Office of Initial Patent Examination mailed a "Notice Of Incomplete Application," requiring a specification of applicants' invention and stating that the filing date would be the date of receipt of the omitted specification.

In response, on March 15, 2002, applicants resubmitted one page of specification. Thereafter, the Office accorded the above-identified application a filing date of March 15, 2002, the date of deposit of the specification.

In the present petition, applicants argue that applicants submitted one page of specification on the original filing date of July 20, 2001. Additionally, applicants' included a copy of the date stamped postcard receipt acknowledging receipt of "Specification, Claims, Abstract (1 page)" on July 20, 2001.

Upon review of the record, the evidence is convincing that the application papers deposited on July 20, 2001, included a specification, which was subsequently misplaced in the United States

Patent and Trademark Office. Therefore, the application was complete on filing and will be granted a filing date of July 20, 2001.

The petition is granted.

The Office notes that the application issued as U.S. Patent Application No. D472889 on April 8, 2003. Accordingly, the application file will be forwarded to the Certificate of Correction Branch for issuance of a Certificate of Correction.

The application file is being forwarded to the Office of Initial Patent Examination for correction of the filing date to July 20, 2001.

Thereafter, the application file will be forwarded to the Certificate of Correction Branch to issue a Certificate of Correction.

Any inquiries related to this decision should be directed to the undersigned at (703) 306-5589.

Christina Tartera Donnell

Christina Tartera Donnell
Senior Petitions Attorney
Office of Petitions

SPE RESPONSE FOR CERTIFICATE OF CORRECTION

Paper No.: _____

DATE : 5-3-07

TO SPE OF : ART UNIT 2914

SUBJECT : Request for Certificate of Correction on Patent No.: D535406 S (29/145-908

A response is requested with respect to the accompanying request for a certificate of correction.

Please complete this form and return with file, within 7 days to:
Palm location **7580, Certificates of Correction Branch – South Tower – 9A22**
If response is for an IFW, **return to employee (named below) via PUBSCofC Team in MADRAS.**
With respect to the change(s) requested, correcting Office and/or Applicant's errors, should the patent read as shown in the certificate of correction (COCIN)? No new matter should be introduced, nor should the scope or meaning of the claims be changed.

Eva James

Second Rep. for drawings

Thank You For Your Assistance

Certificates of Correction Branch
Tel. No. 703-305-8309

The request for issuing the above-identified correction(s) is hereby:
Note your decision on the appropriate box.

- ☑ **Approved** — **All** changes apply.
- ☐ **Approved in Part** — Specify below which changes **do not** apply.
- ☐ **Denied** — State the reasons for denial below.

Comments:

_____ SPE _____ Art Unit

SPE RESPONSE FOR CERTIFICATE OF CORRECTION

Paper No.: 8/7/07

DATE : 7-20-07

TO SPE OF : ART UNIT 2914

SUBJECT : Request for Certificate of Correction for Appl. No. D535406S (29/145908)

Please respond to this request for a certificate of correction within 7 days.

Please review the requested changes/corrections as shown in the **COCIN** document(s) in the IFW application image. No new matter should be introduced, nor should the scope or meaning of the claims be changed.

Please complete the response (see below) and forward the completed response to scanning using document code **COCX**.

~~[illegible]~~ time

Please response A/S/A/P.

Drawing: (Fig 2)

Thanks

E M James

Certificates of Correction Branch

703-308-9390 ext. 116

Thank You For Your Assistance

The request for issuing the above-identified correction(s) is hereby:

Note your decision on the appropriate box.

- ☒ **Approved** — **All** changes apply.
- ☐ **Approved in Part** — Specify below which changes **do not** apply.
- ☐ **Denied** — State the reasons for denial below.

Comments: responded to this paper on 7/18/07

For Lou Zarfas

IAN SIMMONS
SUPERVISORY PATENT EXAMINER 2916

SPE **Art Unit** 2914

UNITED STATES PATENT AND TRADEMARK OFFICE

21 2004

Commissioner for Patents
United States Patent and Trademark Office
P.O. Box 1450
Alexandria, VA 22313-1450
www.uspto.gov

CHRISTIE, PARKER & HALE, LLP
350 WEST COLORDAO BOULEVARD
SUITE 500
PASADENA, CA 91105

#7

In re Application of	:
George N. Alvarado	:
Serial No.: 29/146,562	: PETITION DECISION
Filed: August 10, 2001	:
Attorney Docket No.: 46892/DRK/S1050	:

This is in response to applicant's Petition to Withdraw Abandonment of the Application, which is being treated as a Petition under 37 CFR 1.181, filed November 14 2003, based on not having responded to the Office action.

Applicant's petition is **GRANTED**.

A review of this application shows that a Notice of Allowance was mailed December 17, 2002, setting a three month statutory time period to pay the issue fee. As no response was received by March 17, 2003, a Notice of Abandonment was mailed September 14, 2003.

Applicant has submitted a copy of the docket records, showing that applicant did not receive a Notice of Allowance and Issue Fee due; therefore, the application was abandoned in error.

The application will be forwarded to Issue Branch for printing as a patent in due course. A copy of the Notice of Allowance has also been included for applicant's records.

Should there be any questions with respect to this decision, please contact Sandra Morris; by mail addressed to: Director, Technology Center 3700/2900, P.O. Box 1450, Alexandria, VA 22313-1450; or by telephone at (703) 305-3102 or by facsimile transmission at (703) 305-5679.

John Kittle
Director, Technology Center 3700/2900

UNITED STATES
PATENT AND
TRADEMARK OFFICE

JUL 31 2003

UNDER SECRETARY OF COMMERCE FOR INTELLECTUAL PROPERTY AND
DIRECTOR OF THE UNITED STATES PATENT AND TRADEMARK OFFICE
WASHINGTON, D.C. 20231
WWW.USPTO.GOV

#10

LERNER AND GREENBERG, P.A.
P.O. BOX 2480
HOLLYWOOD, FL 33022-2480

In re Application of	:
Jorg Schroter	:
Serial No.: 29/146,645	: PETITION DECISION
Filed: August 13, 2001	:
Docket No.: ZTP01M5108	:

This is a decision on applicant's Petition under 37 CFR 1.137(b) to withdraw abandonment filed May 30, 2003.

The petition is **GRANTED**.

This application became abandoned for failure to respond to the Office action, mailed April 30, 2002, which set a three-month shortened statutory period for response. Upon failure to respond by July 30, 2002, a Notice of Abandonment was mailed December 5, 2002. This petition followed.

A grantable petition under 37 CFR 1.137(b), as revised December 1, 1997, requires four items: (1) a petition and petition fee; (2) a complete response if not earlier made; (3) a statement that the entire period of delay in prosecution was unintentional; and (4) a terminal disclaimer and disclaimer fee. Applicant's petition has met these requirements.

The application will be forwarded to the Examiner for consideration of applicant's response.

Should there be any questions with regard to this letter please contact Sandra Morris; by letter addressed to the Director, Technology Center 3700/2900, P.O. Box 1450, Alexandria VA 22313-1450; or by telephone at (703) 305-3102 or by facsimile transmission at (703) 305-5679.

John Kittle
Director, Technology Center 3700/2900

UNITED STATES
PATENT AND
TRADEMARK OFFICE

JUL 31 2003

UNDER SECRETARY OF COMMERCE FOR INTELLECTUAL PROPERTY AND
DIRECTOR OF THE UNITED STATES PATENT AND TRADEMARK OFFICE
WASHINGTON, D.C. 20231
WWW.USPTO.GOV

LERNER AND GREENBERG, P.A.
P.O. BOX 2480
HOLLYWOOD, FL 33022-2480

In re Application of	:
Jorg Schroter	:
Serial No.: 29/146,646	: PETITION DECISION
Filed: August 13, 2001	:
Docket No.: ZTP01M5107	:

This is a decision on applicant's Petition under 37 CFR 1.137(b) to withdraw abandonment filed May 30, 2003.

The petition is **GRANTED**.

This application became abandoned for failure to respond to the Office action, mailed April 30, 2002, which set a three-month shortened statutory period for response. Upon failure to respond by July 30, 2002, a Notice of Abandonment was mailed December 5, 2002. This petition followed.

A grantable petition under 37 CFR 1.137(b), as revised December 1, 1997, requires four items: (1) a petition and petition fee; (2) a complete response if not earlier made; (3) a statement that the entire period of delay in prosecution was unintentional; and (4) a terminal disclaimer and disclaimer fee. Applicant's petition has met these requirements.

The application will be forwarded to the Examiner for consideration of applicant's response.

Should there be any questions with regard to this letter please contact Sandra Morris; by letter addressed to the Director, Technology Center 3700/2900, P.O. Box 1450, Alexandria VA 22313-1450, or by telephone at (703) 305-3102 or by facsimile transmission at (703) 305-5679.

John Kittle
Director, Technology Center 3700/2900

UNITED STATES
PATENT AND
TRADEMARK OFFICE

JUL 31 2003

UNDER SECRETARY OF COMMERCE FOR INTELLECTUAL PROPERTY AND
DIRECTOR OF THE UNITED STATES PATENT AND TRADEMARK OFFICE
WASHINGTON, D.C. 20231
WWW.USPTO.GOV

THOMAS C. FEIX, ESQ.
THE CLOROX COMPANY
P.O. BOX 24305
OAKLAND, CA 94623-1305

#5

In re Application of	:
Edward Tucker et al.	:
Serial No.: 29/146,677	: PETITION DECISION
Filed: August 14, 2001	:
Attorney Docket No.: 493.72	:

This is a decision on the petition under 37 CFR 1.137(b), filed June 11, 2003 to revive an unintentionally abandoned application.

The petition is **DISMISSED**.

This application became abandoned for failure to respond to the Notice to File Missing Parts of Nonprovisional Application, mailed September 4, 2001, which set a two month statutory period for submission of a signed declaration, and the $130.00 surcharge. Upon failure to timely respond by November 4, 2001, a Notice of Abandonment was mailed March 24, 2003. This petition followed.

A grantable petition under 37 CFR 1.137(b), as revised December 1, 1997, requires four items: (1) a petition and petition fee; (2) a complete response if not earlier made; (3) a statement that the entire period of delay in prosecution was unintentional; and (4) a terminal disclaimer and disclaimer fee. This petition lacks item (4), as no terminal disclaimer and fee therefor has been filed. For all design applications a terminal disclaimer must be filed (37 CFR 1.137(c)).

Applicant has stated that the Notice to File Missing Parts was not received. Applicant may instead choose to file a Petition under 37 CFR 1.181, if applicant can provide evidence that the Notice was not received. No fees or terminal disclaimer would be required for a petition granted under 37 CFR 1.181.

Any renewed petition in order to be considered timely must be filed within TWO MONTHS of the date of mailing of this decision. A copy of a Terminal Disclaimer has been included with this decision.

Should there be any questions with regard to this letter please contact Sandra Morris; by letter addressed to the Director, Technology Center 3700/2900, P.O. Box 1450, Alexandria VA 22313-1450; or by telephone at (703) 305-3102 or by facsimile transmission at (703) 305-5679.

John Kittle
Director, Technology Center 3700/2900

UNITED STATES
PATENT AND
TRADEMARK OFFICE

UNDER SECRETARY OF COMMERCE FOR INTELLECTUAL PROPERTY AND

DIRECTOR OF THE UNITED STATES PATENT AND TRADEMARK OFFICE
WASHINGTON, D.C. 20231
WWW.USPTO.GOV

#7

THOMAS C. FEIX, ESQ.
THE CLOROX COMPANY
P.O. BOX 24305
OAKLAND, CA 94623-1305

AUG 20 2003

In re Application of	:
Edward Tucker et al.	:
Serial No.: 29/146,677	: PETITION DECISION
Filed: August 14, 2001	:
Attorney Docket No.: 493.72	:

This is a decision on the renewed petition filed under 37 CFR 1.137(b), filed August 5, 2003, to revive an unintentionally abandoned application.

A review of the file history shows that applicant has satisfied all of the requirements of a petition under 37 CFR 1.137(b) with the filing of the terminal disclaimer.

Applicant's petition is **GRANTED**.

The terminal disclaimer fee of $110.00 will be charged to applicants' Deposit Account 03-2270, as directed.

The application will be forwarded to an Examiner for examination after final processing of the application.

Should there be any questions with respect to this decision, please contact Sandra Morris; by mail addressed to: Director, Technology Center 3700/2900, P.O. Box 1450, Alexandria VA 22313-1450; or by telephone at (703) 305-3102 or facsimile transmission at (703) 305-5679.

John Kittle
Director, Technology Center 3700/2900

UNITED STATES PATENT AND TRADEMARK OFFICE

duplicate

COMMISSIONER FOR PATENTS
UNITED STATES PATENT AND TRADEMARK OFFICE
P.O. BOX 1450
ALEXANDRIA, VA 22313-1450
www.uspto.gov

Paper No. 6

COPY MAILED

JAN 07 2004

OFFICE OF PETITIONS

Judd C. Smith
150.5 Broad St.
Lake Geneva, WI 53147

In re Application of
Judd C. Smith
Application No. 29/146,926
Filed: NONE ACCORDED
Attorney Docket No.

: ON PETITION

This is a decision on the petition filed May 27, 2003, to accord the above-identified application a filing date of June 27, 2002.

The petition is **dismissed**.

Any request for reconsideration of this decision must be submitted within two (2) months from the mail date of this decision. Extensions of time under 37 CFR 1.136(a) are permitted. The reconsideration request should include a cover letter entitled "Renewed Petition under 37 CFR 1.182." This is not a final agency decision.

On August 20, 2001, papers were filed with the Patent and Trademark Office and give the application serial number 29/146,926. On September 28, 2001, the Office of Initial Patent Examination mailed a Notice of Incomplete Application indicated that a filing date had not been accorded the application because the specification did not contain at least one claim. The notice allowed a two month period for reply. No response was received within the allowable period. On July 2, 2003, a Notice of Termination of Proceedings was mailed advising that the application had been terminated. On May 27, 2003, petitioner filed the instant petition and argues, in part, that a response to the September 28, 2001, notice was mailed on November 21, 2001.

Petitioner is advised that the application file as maintained by the Patent and Trademark Office is the official record of the application proceedings. A review of the application file did not reveal a response to the September 28, 2001 notice, therefore, unless proven otherwise by petitioner, it is presumed that a response was not file. Petitioner could have established that a timely response was filed by providing an Office date stamped postcard acknowledging receipt of the response. Petitioner did not provide any documentary evidence to support petitioner's claim that the response to the September 28, 2001, notice was filed. A filing date as of the date the response was allegedly filed cannot be accorded the subject application without such proof.

At this juncture, the following options are available to petitioner: 1) petitioner can filed a renewed petition under 37 CFR 1.182 to accord the application a filing date as of the date the response was allegedly filed provided that petitioner provides sufficient evidence that the response was received by the Office, the response is deemed to be proper, and the $130.00 petition fee is remitted; 2) petitioner can file a proper

response to the September 28, 2001, notice and receive a filing date as of the date the response is filed (if petitioner is not able to establish that a proper response was filed to the notice in November 2001, or 3) petitioner may file a new application. Petitioner is cautioned, however, that if petitioner chooses to file a new application the invention claimed cannot be patented if it was made public more than a year before the filing date of application in which the invention is encompassed.

The address as cited on the instant petition differs from the address of record. Although a courtesy copy of this decision is being mailed to the address as cited on the petition, petitioner is advised that all future correspondence will be mailed solely to the address of record until appropriate written instructions to the contrary are received.

Further correspondence with respect to this matter should be addressed as follows:

By mail: Mail Stop Petitions
Commissioner for Patents
Box 1450
Alexandria, VA 22313-1450

By FAX: (703) 872-9306
Attn: Office of Petitions

By Hand: Office of Petitions
Crystal Plaza 4, 3C23
2201 South Clark Place
Arlington, VA 22202

Telephone inquiries should be directed to the undersigned at (703) 305-0010.

Kenya A. McLaughlin
Petitions Attorney
Office of Petitions

cc:
Judd C. Smith
6319 HWY 50
Lake Geneva, WI 53147

UNITED STATES PATENT AND TRADEMARK OFFICE

COMMISSIONER FOR PATENTS
UNITED STATES PATENT AND TRADEMARK OFFICE
P.O. BOX 1450
ALEXANDRIA, VA 22313-1450
www.uspto.gov

Paper No. 8

COPY MAILED
MAR 2 9 2004
OFFICE OF PETITIONS

Judd C. Smith
150.5 Broad St.
Lake Geneva, WI 53147

In re Application of
Judd C. Smith
Application No. 29/146,926
Filed: August 20, 2001
Attorney Docket No.

ON PETITION

This is a decision on the renewed petition filed March 5, 2004, to accord the above-identified application a filing date of November 21, 2001.

The renewed petition is **dismissed, in part. The application is accorded a filing date of August 20, 2001**.

On August 20, 2001, the application was deposited. The filing included, inter alia, a specification, a declaration, five sheets of drawings, and monies for the application filing fee.

On September 28, 2001, the Office of Initial Patent Examination mailed a "Notice of Incomplete Application" stating that the specification did not include at least one claim in compliance with 35 USC 112 and that the filing date of the application would be the date of receipt of a claim in compliance with 35 USC 112.

On May 27, 2003, a petition was filed requesting a filing date. The petition was dismissed by a decision mailed January 7, 2004. The instant renewed petition was filed on March 5, 2004, and requests a filing date of November 21, 2004, or, in the alternative, a filing date of January 14, 2004.

Petitioner argued that a filing date of November 21, 2001, should be accorded the application because a presumably proper response was allegedly mailed on that date. Petitioner concedes that procedures under 37 CFR 1.10 were not used. A review of the application file did not reveal a response filed on November 21, 2001, and petitioner has not filed proper corroborative evidence that supports the argument the response was filed on that date, therefore; the filing date of November 21, 2001, cannot be accorded.

As to the request for the filing date of January 14, 2002, petitioner argued the response that was allegedly mailed on November 21, 2001, was received on January 14, 2002. Petitioner provided a copy of an illegible receipt showing something was mailed on November 21, 2001, and an Office date-stamped postcard of January 14, 2002, that does not list the items that were sent on that date. The filing date of January 14, 2002, cannot be accorded because the evidence provided is inadequate. Again, petitioner failed to send the response by United States Postal Service, Express Mail Service pursuant 37 CFR 1.10, and, although a postcard was filed, the postcard did not properly itemize the papers filed. Section 503 of the *Manual of Patent Examining Procedure* provides, in pertinent part, that:

> [a] postcard receipt which itemizes and properly identifies the items which are being filed serves as prima facie evidence of receipt in the USPTO of all the items listed thereon on the date stamped thereon by the USPTO.
>
> The identifying data on the postcard should be so complete as to clearly identify the item for which receipt is requested . . . The postcard should also identify the type of paper being filed, e.g., new application, affidavit, amendment, notice of appeal, appeal brief, drawings, fees, motions, supplemental oath or declaration, petition, etc., and the number of pages being submitted. If a new application is being filed, all parts of the application being submitted should be separately listed on the postcard, e.g., the number of pages of specification (including written description, claims and abstract), number of claims, number of sheets of drawings, number of pages of oath/declaration, number of pages of cover sheet (provisional application). The postcard receipt will not serve as *prima facie* evidence of receipt of any item which is not adequately itemized on the postcard. For example, merely listing on the postcard "a complete application" or "patent application" will not serve as a proper receipt for each of the required components of an application (e.g., specification (including claims), drawings (if necessary), oath or declaration and the application filing fee) or missing portions (e.g., pages, sheets of drawings) of an application if one of the components or portion of a component is found to be missing by the USPTO. Each separate component should be specifically and properly itemized on the postcard.

Based on the aforementioned, no evidence was provided that would support according the application a filing date of January 14, 2002.

Notwithstanding the aforementioned conclusions, a filing date of August 20, 2001, may be accorded the application. A review of the record reveals that no formal claim was included with the application papers deposited on August 20, 2001. It is noted, however, that the application papers deposited on August 20, 2001, included a declaration stating that the inventor believes himself to be:

> . . . the original, first, and sole inventor . . . of the subject matter which is claimed and for which a patent is sought on the invention entitled the "Collector Clocks INT Time is Money All Collectables Inside of Clocks", the specification of which is attached.

A formal claim was not included with the application when it was deposited. However, since this is a design application, the above-quoted language in the declaration can be construed as the claim required by 35 USC 112 insofar as this design application is concerned. The form of a

claim in a design application is fixed by rule and is accordingly different from the claims of other applications. Accordingly, since this is a design application and since the claim language quoted above does appear at the conclusion, or end, of the specification, there is no statutory prohibition against construing this language as the statutory required claim.

It is also clear that there has been, and is, no doubt as to the form of, and what is to be claimed herein since this a design application for which the form of the claim is set by 37 CFR 1.153. Under the circumstances, it is appropriate that the language quoted above from the declaration be construed as the claim for purposes of according this application a filing date of August 20, 2001.

Accordingly, petitioner is given **TWO MONTHS** from the date of this decision to file an amendment adding a formal claim to the specification filed August 20, 2001. Failure to file the required necessary amendment will result in the abandonment of the application. The time period may be extended pursuant to 37 CFR 1.136(a). The amendment should be directed to the attention of Office of Initial Patent Examination.

The application is being forwarded to the Office of Initial Patent Examination for further processing with a filing date of August 20, 2001, using the application papers filed August 2001.

The address as cited on the instant petition differs from the address of record. Although a courtesy copy of this decision is being mailed to the address as cited on the petition, petitioner is advised that all future correspondence will be mailed solely to the address of record until appropriate written instructions to the contrary are received.

Further correspondence with respect to this matter should be addressed as follows:

By mail: Mail Stop Non-Fee Amendments
Commissioner for Patents
Box 1450
Alexandria, VA 22313-1450

By FAX: (703) 872-9306
Attn: Office of Initial Patent Examination

Telephone inquiries should be directed to the undersigned at (703) 305-0010.

Kenya A. McLaughlin

Kenya A. McLaughlin
Petitions Attorney
Office of Petitions

cc:
Mary E. Eberle
Boyle, Fredrickson Newholm, Stein & Gratz, S.C.
250 Plaza, Suite 1030
250 East Wisconsin Avenue
Milwaukee, WI 53202

UNITED STATES PATENT AND TRADEMARK OFFICE

COMMISSIONER FOR PATENTS
UNITED STATES PATENT AND TRADEMARK OFFICE
P.O. BOX 1450
ALEXANDRIA, VA 22313-1450
www.uspto.gov

Paper No. 7

FULBRIGHT & JAWORSKI L.L.P.
BILLY A. ROBBINS
TWENTY-NINTH FLOOR
865 SOUTH FIGUEROA
LOS ANGELES CA 90017-2571

COPY MAILED

AUG 26 2003

OFFICE OF PETITIONS

ON PETITION

In re Application of :
Dennis K. Swanson :
Application No. 29/147,490 :
Filed: 27 December, 1996 :
Atty Docket No. 3599-333-D1 :

This is a decision on the petition filed on 11 July, 2003, requesting that the above-identified application be accorded a filing date of 27 December, 1996.

The petition is **granted**.

On 27 December, 1996, the application was deposited under former 37 CFR 1.60 as a divisional application of Application No. 29/049,794, filed on 31 January, 1996 (issued as U.S. Patent No. D396,123 on 14 July, 1998). The original application papers consisted of a Rule 60 cover sheet, three (3) sheets of drawings containing six (6) figures a fee transmittal sheet, as well as a preliminary amendment.

Effective 27 February, 1983, an applicant must provide the copy of the prior application, including a true copy of the drawings, for a 37 CFR 1.60 application. Therefore, on 15 October, 2001, the Office of Initial Patent Examination (OIPE), mailed a Notice of Incomplete Nonprovisional Application was mailed, stating that the application had not been accorded a filing date because the specification and at least one claim was missing, and that the filing date would be the date that a specification and claim were received. A declaration in compliance with 37 CFR 1.63 and the statutory basic filing fee were also required.

It is noted that prior Application No. 29/049,794, issued as Patent No. D396,123 on 14 July, 1998. Therefore, the earlier filing date is necessary to establish copendency between the prior application and the above-identified application in order for the above-identified application to be considered a proper filing under 37 CFR 1.60.

In response, on 20 December, 2001 (certificate of mailing date 17 December, 2001), petitioner filed a specification and declaration. However, as petitioner filed a new design application cover sheet with the specification and declaration and did not identify the present application number, or that the papers were in response to the Notice mailed on 15 November, 2001, on the cover sheet, the Office treated the papers received on 20 December, 2001, as a new application, accorded them a filing date of 20 December, 2001, and assigned them Application No. 29/152,317.

On 10 October, 2002, a Notice of Termination of Proceedings Under 37 CFR 1.52(e) was mailed, stating that the proceedings on this application were terminated, as the application did not meet the requirements for according the application a filing date.

Petitioner now requests that the present application be accorded a filing date of 27 December, 1996, and assert that a complete application under former 37 CFR 1.60, including a true copy of the prior application was filed on 27 December, 1996. Petitioner asserts that a proper response to the Notice mailed on 15 October, 2001, was timely filed. In support, petitioners have provided a copy of a postcard bearing Application No. 29/147,490 itemizing the filing of, *inter alia*, a copy of the Notice of Incomplete Application, four pages of specification and a declaration. The postcard also contains an Office-date stamp dated 12/20/01 and listing Application No. 29/152,317.

37 CFR 1.60(b) states, in part, that if a true copy of the prior application as filed is not filed with the application or if the statement that the application papers are a true copy is omitted, the application will not be given a filing date earlier than the date upon which the copy and statement are filed, unless a petition with the fee as set forth in 37 CFR 1.17(i)(1) is filed which satisfactorily explains the delay in filing these items.

In view of the evidence presented with the present petition, while the papers filed on 20 December, 2001, were intended to be a reply to the Notice mailed on 15 October, 2001, they were not filed as a proper reply, but as a new application.

In this application, the failure to file a true copy of the specification and at least one claim has been deemed to be an inadvertant error.

The petition is **GRANTED**.

The application still lacks a clean copy of the application papers originally filed in the parent application. In order to avoid any further processing delays, on petition, a copy of the application papers as originally filed in application No. 29/049,794 will be prepared by the U.S. Patent and Trademark Office (USPTO) for insertion into the file of the above-identified application.

The Notice mailed on 10 October, 2002, is hereby **vacated**.

The petition fee of $130.00, late filing fee or oath or declaration surcharge of $130.00,[1] and design statutory basic filing fee of $330.00, less the handling fee retained of $130.00, will be charged to counsel's deposit account, No. 50-0337.

Thereafter, the application will be forwarded to OIPE for further processing with a filing date of 27 December, 1996, using the application papers and drawings present on filing and the copy prepared by the USPTO on 19 July, 2003.

Telephone inquiries concerning this matter may be directed to the undersigned at 703.308.6918.

DWood

Douglas I. Wood
Senior Petitions Attorney
Office of Petitions

[1]Although the petition lists the late filing surcharge as $65.00, since the application has not been filed with small entity status the correct surcharge amount is $130.00.

UNITED STATES PATENT AND TRADEMARK OFFICE

COMMISSIONER FOR PATENTS
UNITED STATES PATENT AND TRADEMARK OFFICE
P.O. BOX 1450
ALEXANDRIA, VA 22313-1450
www.uspto.go

AUG 3 1 2004

BILLY A. ROBBINS
FULBRIGHT & JAWORSKI L.L.P.
865 SOUTH FIGUEROA
TWENTY-NINTH FLOOR
LOS ANGELES, CA 90017-2571

In re Application of	
Dennis K. Swanson	:
Serial No.: 29/147,490	:
Filed: December 27, 1996	: PETITION DECISION
Attorney Docket No.: 3599-333-D1	:
	:

This is a decision on applicant's Petition under 37 CFR 1.137(b) submitted July 7, 2004, to revive an unintentionally abandoned application.

This application became abandoned for failure to respond to the Notice of Allowance mailed December 3, 2003, which set a three-month statutory period to pay the issue fee and submit formal drawings. As no response was received by March 3, 2004, a Notice of Abandonment was mailed May 7, 2004. Applicant then filed this petition.

A grantable petition under 37 CFR 1.137(b), as revised December 1, 1997, requires four items: (1) a petition and petition fee; (2) a complete response if not earlier made; (3) a statement that the entire period of delay in prosecution was unintentional; and (4) a terminal disclaimer and disclaimer fee.

Applicant's petition is **GRANTED.**

The application will be forwarded to Issue Branch to be processed as a patent in due course.

Should there be any questions with respect to this decision, please contact Sandra Morris; by mail addressed to: Director, Technology Center 3700/2900, P.O. Box 1450, Alexandria, VA 22313-1450; or by telephone at (571) 272-2622.

John Kittle
Director, Technology Center 3700/2900

UNITED STATES PATENT AND TRADEMARK OFFICE

Commissioner for Patents
United States Patent and Trademark Office
P.O. Box 1450
Alexandria, VA 22313-1450
www.uspto.gov

LEYDIG VOIT & MAYER, LTD
TWO PRUDENTIAL PLAZA, SUITE 4900
180 NORTH STETSON AVENUE
CHICAGO, IL 60601-6780

#61

In re Application of	:
Daniele Venturini et al.	:
Serial No.: 29/147,757	: PETITION DECISION
Filed: September 5, 2001	:
Attorney Docket No.: 213446	:

This is a decision on applicants' petition to revive patent application under 37 CFR 1.137(b), filed on October 29, 2003, to revive an unintentionally abandoned application.

This application became abandoned for failure to fully respond to the Notice of Allowance mailed July 2, 2002, which set a three-month statutory period to submit the Issue Fee and formal drawings. The Issue fee was submitted October 1, 2002; however, as formal drawings not received by October 2, 2002, the application was abandoned. Applicant then filed this petition.

A grantable petition for a design application under 37 CFR 1.137(b), as revised December 1, 1997, requires four items: (1) a petition and petition fee; (2) a complete response if not earlier made; (3) a statement that the entire period of delay in prosecution was unintentional; and (4) a terminal disclaimer and disclaimer fee. The requirement for a terminal disclaimer has been waived as the petition was filed one month of the mailing date of the Notice of Abandonment.

Applicants' petition is **GRANTED**.

The application will be forwarded to Publication Division for printing as a patent in due course.

Should there be any questions with respect to this decision, please contact Sandra Morris; by mail addressed to: Director, Technology Center 3700/2900, P.O. Box 1450, Alexandria, VA 22313-1450; or by telephone at (703) 305-3102 or by facsimile transmission at (703) 305-5679.

John Kittle
Director, Technology Center 3700/2900

UNITED STATES PATENT AND TRADEMARK OFFICE

COMMISSIONER FOR PATENTS
UNITED STATES PATENT AND TRADEMARK OFFICE
P.O. BOX 1450
ALEXANDRIA, VA 22313-1450
www.uspto.gov

Paper No. 14

PEARSON & PEARSON
JOHN H PEARSON JR
10 GEORGE STREET
LOWELL MA 01852

COPY MAILED

JUN 0 4 2003

OFFICE OF PETITIONS

In re Application of	:	
Yoshirou Hoshino	:	
Application No. 29/122,773	:	DECISION DISMISSING PETITION
Filed: 12 June, 2000	:	
Attorney Docket No. 32376	:	

This is a decision on the petition filed on 23 October, 2002, requesting that the above-identified application be accorded a filing date of 3 May, 2000 with one claim as a part of the original disclosure.

The petition is **DISMISSED**.

The application was deposited 3 May, 2000. On 2 June, 2000, Initial Patent Examination Division mailed a Notice to File Missing Parts of Nonprovisional Application, stating that the oath or declaration and a surcharge for its late filing was required. The declaration and surcharge for its late filing were filed on 12 June, 2000. Petitioner states that the Examiner informed counsel by telephone on 16 August, 2001, that the application did not include at least one claim, and that the filing date would be the date a claim was received. On 7 September, 2001, petitioner filed a reply including one claim.[1]

In the present petition, petitioner asserts that the application as filed is entitled to a filing date of 3 May, 2000, because the application claims priority to two Japanese applications filed prior to 3 May, 2000.

The arguments have been considered, but are not persuasive. The U.S. Patent and Trademark Office (Office) file is the official

[1]Although the reply containing the claim was filed on 7 September, 2001, a review of Office PALM records reveals that the application was inadvertantly accorded a filing date of 24 August, 2001.

record of the papers originally filed in this application. A review of the papers originally filed reveals that no claim was filed on 3 May, 2000. An applicant alleging that a paper was filed in the Office and later misplaced has the burden of proving the allegation by a preponderance of the evidence.
Where the records of the Office (e.g. the file of the application) contain any document(s) or fee(s) corresponding to the contents of the correspondence at issue, the Office will rely upon its official record of the contents of such correspondence in the absence of convincing evidence (e.g. a postcard receipt under MPEP 503 containing specific itemization of the document(s) or fee(s) purported to have been filed with the correspondence at issue) that the Office received and misplaced any document(s) or fee(s) that is not among the official records of the Office. If a new application is being filed, all parts of the application being submitted should be separately listed on the postcard, *e.g.,* the number of pages of specification (including written description, claims and abstract) number of claims, number of sheets of drawings, number of pages of oath/declaration. The postcard receipt will not serve as *prima facie* evidence of receipt of any item which is not adequately itemized on the postcard.[2]

At the outset, it is noted that had petitioner utilized an itemized return postcard in accordance with Section 503 of the Manual of Patent Examining Procedure (MPEP), petitioner could have avoided the predicament that has now occurred. A postcard receipt which itemizes and properly identifies the items which are being filed serves as *prima facie* evidence of receipt in the USPTO of all of the items listed thereon on the date stamped thereon by the USPTO. Where the records of the Office (e.g. the file of the application) contain any document(s) or fee(s) corresponding to the contents of the correspondence at issue, the Office will rely upon its official record of the contents of such correspondence in the absence of convincing evidence (e.g. a postcard receipt under MPEP 503 containing specific itemization of the document(s) or fee(s) purported to have been filed with the correspondence at issue) that the Office received and misplaced any document(s) or fee(s) that is not among the official records of the Office. If a new application is being filed, all parts of the application being submitted should be separately listed on the postcard (e.g. the number of pages of specification (including written description, claims and abstract) number of claims, number of sheets of drawings, number

[2] MPEP 503.

of pages of oath/declaration. The postcard receipt will not serve as *prima facie* evidence of receipt of any item which is not adequately itemized on the postcard.[3]

Further, petitioners' assertion that this application claims priority to an earlier-filed foreign application is not persuasive. A review of the record reveals that no claim was received on 3 May, 2000. Clearly a claim, was intended to be a part of this application. Whether the claim was a part of a copending application is not an issue here since the copending application was not specifically incorporated by reference into the disclosure of this application.[4] The mere reference to another application is not an incorporation of anything therein into the application containing the reference.[5] To allow one to retroactively incorporate by reference a second application into a first application would allow the addition of matter into an application that was not present on filing which would be contrary to our statutes and rules. Still further, the question of new matter is not an issue here. A claims was simply not filed in the present application in the USPTO on 3 May, 2000. It is further noted that copies of the foreign priority documents were not filed in the USPTO until 26 June, 2000.

With regards to petitioner's claim that he relied on the Filing Receipt and the Notice to File Missing Parts in not stating that the application did not include a claim, the Office regrets the delay. However, although the USPTO attempts to notify parties as to defective papers in order to permit timely refiling, it has no obligation to do so.[6] Rather, it is the applicants who are ultimately responsible for filing proper documents.[7]

The requirement for a claim in a design application is a requirement of the statute. Section 171 of title 35 of the United States Code makes § 112 applicable to design applications. Section 112 requires that the " specification shall conclude with one or more claims particularly pointing out and distinctly

---

[3] MPEP 503.

[4] See MPEP 608.01(p).

[5] See In re de Seversky, 177 USPQ 144, 146 (C.C.P.A. 1973); Dart Industries v. Banner, 207 USPQ 273, 276 (D.C. Cir. 1980).

[6] See In re Colombo Inc., 33 USPQ2d 1530, 1532. (Comm'r Pat. 1994).

[7] Id..

claiming the subject matter which the applicant regards as his invention." Thus, the requirement for a claim in a design application is not *pro forma*, but is a necessary part of a complete design application.

However, the form of a claim in a design application s fixed by rule, and in that way, is different from the claims of other applications. Section 1.153 specifically provides that:

> The title of the design must designate the particular article. No description, other than a reference to the drawing, is ordinarily required. The claim shall be in formal terms to the ornamental design for the article (specifying name) as shown, or as shown and described. More than one claim is neither required nor permitted.

A review of the record reveals that the papers filed on 3 May, 2000, omitted both the language "we claim" and "an ornamental design for". The application as filed did not conclude with a formal claim.

However, on 12 June, 2000, petitioners filed a declaration stating that the inventor believed himself to be

> the original, first and sole inventor of the subject matter which is claimed and for which a patent is sought on the invention entitled: High-Frequency Signal Distributor

Since this is a <u>design</u> application, this language in the declaration can be construed as the claim required by 35 U.S.C. § 112, second paragraph, insofar as this application is concerned. Accordingly, since this is a <u>design</u> application and since the claim language quoted above does appear at the conclusion or end of the specification, there is no statutory prohibition against construing this language as the claim required by statute. It is also clear that there has been, and is, no doubt as to the form of, and what is to be claimed herein since this a <u>design</u> application for which the form of the claim is set by 37 CFR 1.153. Under the circumstances, it is appropriate that the language from the declaration be construed as the claim for filing date purposes and applicant be allowed to amend the application under § 1.182.

Accordingly, the petition is DISMISSED to the extent that the application is entitled to a filing date of 3 May, 2000. A petition fee of $130.00 is due and will be charged to counsel's

deposit account, No. 16-0875 as authorized in the petition, as the petition was necessitated by an error on the part of the petitioner. Moreover, consideration of a preliminary amendment is required to correct the error. The application is entitled to a filing date of 12 June, 2000, and consideration of such a preliminary amendment.

The amendment filed on 7 September, 2001 will be entered in due course (if it has not been already). It must be considered by the examiner for entry of new matter not described in the application filed on 12 June, 2000.[8]

The application is being forwarded to the Office of Initial Patent Examination ~~for~~ further processing as a design application with a filing date of 12 June, 2000, using the application papers filed on 12 June, 2000. Thereafter, the application will be forwarded to Technology Center 2911 for further processing.

Telephone inquiries concerning this matter may be directed to the undersigned at (703)308-6918.

DIWood

Douglas I. Wood
Senior Petitions Attorney
Office of Petitions

The case file is in control for his waiting for his 1.182 petition and preliminary amendment.

[8] 35 U.S.C. § 112, first paragraph; 35 U.S.C. § 132. The issue of the filing date to be accorded this application came before the Office of Petitions after a first Office action had been mailed.

UNITED STATES
PATENT AND
TRADEMARK OFFICE

MAR 13 2003

UNDER SECRETARY OF COMMERCE FOR INTELLECTUAL PROPERTY AND
DIRECTOR OF THE UNITED STATES PATENT AND TRADEMARK OFFICE
WASHINGTON, D.C. 20231
WWW.USPTO.GOV

#6

NORMAN M. CAMERON
SUITE 1401 - 1166 ALBERNI STREET
VANCOUVER BC V6E 3Z3 CA CANADA

In re Application of	:
Mark Obedzsinski	:
Serial No.: 29/148,539	: PETITION DECISION
Filed: September 24, 2001	:
Attorney Docket No.: 1507D01US	:

This is a decision on the petition under 37 CFR 1.137(b), received January 22, 2003, to revive an unintentionally abandoned application.

The petition is **DISMISSED**.

This application became abandoned for failure to respond to the Office action mailed March 12, 2002, which set a two month shortened statutory period for response. Upon failure to respond by May 13, 2002, a Notice of Abandonment was mailed October 22, 2002.

A grantable petition under 37 CFR 1.137(b), as revised December 1, 1997, requires four items: (1) a petition and petition fee; (2) a complete response if not earlier made; (3) a statement that the entire period of delay in prosecution was unintentional; and (4) a terminal disclaimer and disclaimer fee of $55.00. This petition lacks items (3) and (4). Applicant does not state that the *entire* delay was unintentional, and no terminal disclaimer and fee therefor has been filed. For all design applications a terminal disclaimer must be filed (37 CFR 1.137(c)).

Any renewed petition in order to be considered timely must be filed within TWO MONTHS of the date of mailing of this decision. A copy of a Petition has been included for applicant's use.

Should there be any questions with regard to this letter please contact Sandra Morris; by letter addressed to the Director, Technology Center 3700/2900, Washington, DC 20231, or by telephone at (703) 305-3102 or by facsimile transmission at (703) 305-5679.

John Kittle
Director, Technology Center 3700/2900

UNITED STATES
PATENT AND
TRADEMARK OFFICE

JUL 24 2003

UNDER SECRETARY OF COMMERCE FOR INTELLECTUAL PROPERTY AND

DIRECTOR OF THE UNITED STATES PATENT AND TRADEMARK OFFICE
WASHINGTON, D.C. 20231
WWW.USPTO.GOV

#8

NORMAN M. CAMERON
SUITE 1401 – 1166 ALBERNI STREET
VANCOUVER BC V6E 3Z3 CA
CANADA

In re Application of	:
Mark Obedzsinski	:
Serial No.: 29/148,539	: PETITION DECISION
Filed: September 24, 2001	:
Attorney Docket No.: 1507D01US	:

This is a decision on the renewed petition filed under 37 CFR 1.137(b), filed April 24, 2003, to revive an unintentionally abandoned application.

A review of the file history shows that applicant has satisfied all of the requirements of a petition under 37 CFR 1.137(b) with the filing of the terminal disclaimer.

Applicant's petition is **GRANTED**.

The application will be forwarded to the Examiner for review of applicant's response.

Should there be any questions with respect to this decision, please contact Sandra Morris; by mail addressed to: Director, Technology Center 3700/2900, P.O. Box 1450, Alexandria VA 22313-1450; or by telephone at (703) 305-3102 or by facsimile transmission at (703) 305-5679.

John Kittle
Director, Technology Center 3700/2900

UNITED STATES
PATENT AND
TRADEMARK OFFICE

UNDER SECRETARY OF COMMERCE FOR INTELLECTUAL PROPERTY AND

DIRECTOR OF THE UNITED STATES PATENT AND TRADEMARK OFFICE
WASHINGTON, D.C. 20231
WWW.USPTO.GOV

DONALD N. LARSON, ESQ.
SQUIRE, SANDERS & DEMPSEY LLP
801 S. FIGUEROA STREET, 14TH FLOOR
LOS ANGELES, CA 90017

#5

AUG 29 2003

In re Application of	:	
Jennifer Lynn Dean	:	
Serial No.: 29/148,672	:	PETITION DECISION
Filed: September 24, 2001	:	
Docket No.: 310048-565	:	

This is a decision on applicant's Petition under 37 CFR 1.137(b) to withdraw abandonment filed April 11, 2003.

The petition is **GRANTED**.

This application became abandoned for failure to respond to the Notice to File Missing Parts of Nonprovisional Application, filing date granted mailed October 12, 2001, which set a two-month statutory period for response. Upon failure to respond by December 12, 2001, the case was abandoned. This petition followed.

A grantable petition under 37 CFR 1.137(b), as revised December 1, 1997, requires four items: (1) a petition and petition fee; (2) a complete response if not earlier made; (3) a statement that the entire period of delay in prosecution was unintentional; and (4) a terminal disclaimer and disclaimer fee. A review of the file history shows that applicant has satisfied all of the requirements of a petition under 37 CFR 1.137(b), after a terminal disclaimer was submitted by facsimile on August 14, 2003.

The application will be forwarded to an Examiner after initial processing of the application.

The terminal disclaimer fee of $110.00, the filing fee of $320.00, and the $130.00 surcharge for the Notice to file missing parts will be charged to applicant's Deposit Account 07-1853, as directed.

Should there be any questions with regard to this letter please contact Sandra Morris; by letter addressed to Director, Technology Center 3700/2900, P.O. Box 1450, Alexandria, VA 22313-1450; or by telephone at (703) 305-3102 or facsimile transmission at (703) 305-5679.

John Kittle
Director, Technology Center 3700/2900

UNITED STATES PATENT AND TRADEMARK OFFICE

COMMISSIONER FOR PATENTS
UNITED STATES PATENT AND TRADEMARK OFFICE
P.O. BOX 1450
ALEXANDRIA, VA 22313-1450
www.uspto.gov

Paper No. 6

WELSH & FLAXMAN LLC
2431 JEFFERSON DAVIS HIGHWAY
SUITE 112
ARLINGTON, VA 22202

COPY MAILED

OCT 21 2003

OFFICE OF PETITIONS

In re Application of:	:	
Diego Della Valle	:	
Application No. 29/148,942	:	
Filed: September 28, 2001	:	
Attorney Docket Number: SMO-03.01 (MS/983)	:	DECISION ON PETITION

This is a decision on the Petition Regarding Notice of Incomplete Nonprovisional Application, filed August 27, 2003, requesting that the above-identified application be accorded a filing date of September 28, 2001, including a specification and one claim as part of the original disclosure.

The petition is dismissed.

The application was filed on September 28, 2001. However, on July 21, 2003, the Office of Initial Patent Examination (OIPE) mailed a Notice of Incomplete Nonprovisional Application (hereinafter "Notice"), stating that a filing date had not been accorded the application because the application had been filed without a specification. That same day, July 21, 2003, the Office mailed a Withdrawal of Previously sent Notice, withdrawing the Notice of Incomplete Nonprovisional Application. In response to the Notices, Applicant reviewed the file for the above-identified application and found that the claim page was missing from the file.

Applicant files the instant petition seeking to include that claim page among the original application papers filed on September 28, 2001. In support of this request, Applicant files a copy of the return-receipt postcard. The postcard evinces receipt of a Petition, Declaration & Power of Attorney, an Assignment and Cover Letter for Assignment, 2 sheets of drawings and a Certificate of Mailing. Applicant avers that the Petition is the specification.

The best evidence of what was filed on September 28, 2001, is applicant's postcard receipt. In this case, applicant's postcard receipt fails to demonstrate that a claim page was filed with the application.

Applicant's Return Receipt Postcard

Evidence of receipt of any correspondence filed in the Patent and Trademark Office can be obtained by submitting a self-addressed postcard properly itemizing and identifying the paper or papers being filed. Upon receipt of the correspondence, the Patent and Trademark Office will check the listing on the post card against the papers submitted, making sure that all items listed are present and will then stamp the postcard with an Official date stamp and place the postcard in the outgoing mail. "A postcard receipt which itemizes and properly identifies the papers which are being filed serves as *prima facie* evidence of receipt in the PTO of all items listed thereon by the PTO." MPEP § 503.

In this instance, Petitioner's postcard receipt does not identify any claims as having been filed with the application, but notes only that a Petition was filed. Thus, Applicant's postcard receipt fails to demonstrate that any claims were present upon filing the instant application.

The MPEP provides that

> If a new application is being filed, all parts of the application being submitted should be separately listed on the post card, e.g. the number of pages of specification (including written description, claims and abstract), number of claims, number of sheets of drawings, number of pages of oath/declaration, number of pages of cover sheet (provisional application).
>
> The postcard receipt will not serve as prima facie evidence of receipt of any item which is not adequately itemized on the postcard. For example, merely listing on the postcard 'a complete application' or 'patent application' will not serve as a proper receipt for each of the required components of an application (e.g., specification (including claims), drawings (if necessary), oath or declaration and the application filing fee[ ] or missing portions (e.g., pages, sheets of drawings) of an application if one of the components or portions of a component is found to be missing by the USPTO. Each separate

> component should be specifically and properly itemized on the postcard.

MPEP § 503

If a claim page was not present on the September 28, 2001 filing date, it cannot be considered a part of the original disclosure of the application. Petitioner has failed to satisfactorily demonstrate that a claim page was present in the Office on September 28, 2001.

Construction of a Claim in a Design Application

It is noted, however, that the application papers deposited September 28, 2001, included a declaration stating that the inventor believes himself to be

> the original, first and sole inventor . . . of the subject matter which is claimed and for which a patent is sought on the invention entitled "Sole for Footwear", the specification of which is attached hereto.

A formal claim was not included with the application when it was deposited. However, since this a design application, the above-quoted language in the declaration can be construed as the claim required by 35 USC 112 insofar as this design application is concerned. The form of a claim in a design application is fixed by rule and is accordingly different from the claims of other applications. Accordingly, since this a design application, and since the claim language quoted above does appear at the conclusion, or end, of the specification, there is no statutory prohibition against construing this language as the statutory required claim. It is also clear that there has been, and is, no doubt as to the form of, and what is to be claimed herein since this is a design application for which the form of the claim is set by 37 CFR 1.153. Under the circumstances, it is appropriate that the language quoted above from the declaration be construed as the claim for purposes of according this application a filing date of September 28, 2001.

A Preliminary Amendment is Required

A further review of the record reveals that the papers filed with the instant petition on August 27, 2003, include a formal claim for a design application. However, the papers appear to be an amended version of the papers submitted on filing, since

no formal claim was submitted on filing. Therefore, no formal claim for this application has been presented. A preliminary amendment adding a formal claim comprising the following language "The ornamental design for a Sole for Footwear as shown and described," is required.

Applicant is advised that a new preliminary amendment is required before the first Office action on the merits. The claim page filed August 27, 2003, was incorporated into the petition under §1.53. This is improper. The preliminary amendment must be set forth in a separate paper. See 37 CFR 1.4(c).

Accordingly, applicant is given TWO MONTHS from the date of this decision to file an amendment adding a formal claim to the specification filed September 28, 2001. The application file will be retained in the Office of Petitions to await the required reply for a period of TWO MONTHS. Failure to file the required necessary amendment will result in the abandonment of the application. The time period may be extended pursuant to 37 CFR 1.136(a).

Further correspondence with respect to this matter should be addressed as follows:

By mail: Mail Stop Petitions
Commissioner for Patents
PO Box 1450
Alexandria, VA 22313-1450

By FAX: (703) 308-6916
Attn: Office of Petitions

By hand: Crystal Plaza Four, Suite 3C23
2201 S. Clark Place
Arlington, VA 22202-3513

Telephone inquiries concerning this matter should be directed to the undersigned at (703) 305-0014.

Derek L. Woods
Petitions Attorney
Office of Petitions

UNITED STATES PATENT AND TRADEMARK OFFICE

COMMISSIONER FOR PATENTS
UNITED STATES PATENT AND TRADEMARK OFFICE
P.O. BOX 1450
ALEXANDRIA, VA 22313-1450
www.uspto.go

Paper No. 8

WELSH & FLAXMAN LLC
2431 JEFFERSON DAVIS HIGHWAY
SUITE 112
ARLINGTON, VA 22202

COPY MAILED
MAR 17 2004
OFFICE OF PETITIONS

In re Application of:
Diego Della Valle
Application No. 29/148,942
Filed: September 28, 2001
Attorney Docket Number: SMO-03.01 (MS/983)

DECISION ON PETITION

This is a decision on the Request for Entry of Amendment, which is being treated as a Request for Reconsideration of Petition Regarding Notice of Incomplete Nonprovisional Application, filed February 17, 2004, requesting that the above-identified application be accorded a filing date of September 28, 2001, including a specification and one claim as part of the original disclosure.

The petition is granted.

Background

The application was filed on September 28, 2001. However, on July 21, 2003, the Office of Initial Patent Examination (OIPE) mailed a Notice of Incomplete Nonprovisional Application (hereinafter "Notice"), stating that a filing date had not been accorded the application because the application had been filed without a specification. That same day, July 21, 2003, the Office mailed a Withdrawal of Previously sent Notice, withdrawing the Notice of Incomplete Nonprovisional Application. In response to the Notices, Applicant reviewed the file for the above-identified application and found that the claim page was missing from the file.

Applicant filed a petition on August 27, 2003, and a claim page, seeking to include the claim page among the original application papers filed on September 28, 2001. That petition was dismissed in a decision mailed October 21, 2003. The Decision dismissing the petition concluded that if the claim page was not present on filing, then it could not be considered a part of the original disclosure of the application.

In response to the Decision dismissing the petition, Applicant files the instant Request for Entry of Amendment, requesting entry of a Preliminary Amendment adding the claim page.

Decision

A review of the record reveals that no formal claim was included with the application papers deposited September 28, 2001. However, it is noted that the application papers deposited September 28, 2001, included a declaration stating that the inventor believes himself to be "the original, first, and sole inventor . . . of the subject matter which is claimed and for which a patent is sought on the invention entitled: Sole for Footwear, the specification of which is attached hereto.

A formal claim was not included with the application when it was deposited. However, since this a design application, the above-quoted language in the declaration can be construed as the claim required by 35 USC 112 insofar as this design application is concerned. The form of a claim in a design application is fixed by rule and is accordingly different from the claims of other applications. Accordingly, since this is a design application, and since the claim language quoted above does appear at the conclusion, or end, of the specification, there is no statutory prohibition against construing this language as the statutorily required claim. It is also clear that there has been, and is, no doubt as to the form of, and what is to be claimed herein since this is a design application for which the form of the claim is set by 37 CFR 1.153. Under the circumstances, it is appropriate that the language quoted above from the declaration be construed as the claim for purposes of according this application a filing date of September 28, 2001.

Petitioner is reminded that errors such as occurred herein can result in loss of rights and care must be taken to avoid such.

The petition is granted.

Receipt is acknowledged of Preliminary Amendment filed November 19, 2003.

The preliminary amendment filed November 19, 2003, will be entered in due course and must be considered by the examiner for entry of new matter not described in the application as filed. 35 USC 112, first paragraph; 35 USC 132.

The application is being returned to OIPE for further processing with a filing date of September 28, 2001, using the application papers filed September 28, 2001.

Telephone inquiries concerning this matter should be directed to Petitions Attorney Derek L. Woods at (703) 305-0014.

Derek L. Woods
Petitions Attorney
Office of Petitions

UNITED STATES PATENT AND TRADEMARK OFFICE

Commissioner for Patents
United States Patent and Trademark Office
P.O. Box 1450
Alexandria, VA 22313-1450
www.uspto.gov

NOV 13 2003

#5

MICHAEL BERNS
MALONEY, PARKINSON AND BERNS
135 W MAIN STREET
URBANA, IL 61801

In re Application of	:
Jodie Smith	:
Serial No.: 29/149,127	: PETITION DECISION
Filed: October 4, 2001	:
Attorney Docket No.: SMITHJODIE	:

This is in response to applicant's Petition to Revive Unavoidably Abandoned Application under 37 CFR 1.137(a), which is being treated as a Petition to Withdraw Abandonment under 37 CFR 1.181, filed September 10, 2003 based on failure to receive the Notice to File Missing Parts.

A review of the file history shows that the Office mailed a Notice to File Missing Parts of Application on October 22, 2001, setting a two-month period for response. As no response was received, a Notice of Abandonment was mailed on July 1, 2003. This petition followed.

> M.P.E.P. 711.03(c) gives appropriate guidance as to how to proceed when an Office action is not received. To establish nonreceipt of an Office action, applicant must include a statement, attesting to the fact that applicant did not receive the communication, the showing required to establish nonreceipt of an Office communication must include a statement from the practitioner stating that the Office communication was not received by the practitioner and attesting to the fact that a search of the file jacket and docket records indicates that the Office communication was not received. A copy of the docket record where the nonreceived Office communication would have been entered had it been received and docketed must be attached to and referenced in practitioner's statement. See Notice entitled "Withdrawing the Holding of Abandonment When Office Actions Are Not Received," 1156 O.G. 53 (November 16, 1993).
>
> The showing outlined above may not be sufficient if there are circumstances that point to a conclusion that the Office action may have been lost after receipt rather than a conclusion that the Office action was lost in the mail (e.g., if the practitioner has a history of not receiving Office actions). Evidence of nonreceipt of an Office communication or action (e.g., Notice of Abandonment or an advisory action) other than that action to which reply was required to avoid abandonment would not warrant withdrawal of the holding of abandonment. Applicant's statement that the correspondence from the Office was not received is not enough evidence to prove that the response was not received.

Applicant should therefore submit evidence that the Notice was never received by applicant, as required by MPEP 711.03(c).

If applicant cannot provide this information, then the Petition under 37 CFR 1.137(a) is not acceptable, as a terminal disclaimer and fee is required with the Petition. The period of time to be disclaimed by applicant is that period of time equivalent to the period of time, in months, between the date of abandonment and the filing of a grantable petition. The period of time will be determined by the Office and applicant will be informed thereof.

Applicant's petition is **DISMISSED** without prejudice to the filing of a renewed petition. Any renewed petition must be filed within TWO MONTHS of the mailing date of this decision in order to be considered timely.

The $55.00 petition fee will be refunded if the petition is granted under 37 CFR 1.181, as no fees would be required.

Should there be any questions with regard to this letter please contact Sandra Morris; by letter addressed to the Director, Technology Center 3700/2900, PO Box 1450, Alexandria VA 22313-1450 or by telephone at (703) 305-3102 or by facsimile transmission at (703) 305-5679.

John Kittle
Director, Technology Center 3700/2900

UNITED STATES PATENT AND TRADEMARK OFFICE

JAN 14 2004

Commissioner for Patents
United States Patent and Trademark Office
P.O. Box 1450
Alexandria, VA 22313-1450
www.uspto.gov

#1

MICHAEL BERNS
MALONEY, PARKINSON AND BERNS
135 W MAIN STREET
URBANA, IL 61801

In re Application of	:
Jodie Smith	:
Serial No.: 29/149,127	: PETITION DECISION
Filed: October 4, 2001	:
Attorney Docket No.: SMITHJODIE	:

This is a decision on applicant's renewed Petition under 37 CFR 1.181 to withdraw abandonment filed November 26, 2003.

The petition is **GRANTED**.

Applicant has submitted a statement, attesting that the Notice to File Missing Parts was not received. A copy of the docket record had not been created for this application; therefore, this has not been submitted to provide additional evidence.

The application will be forwarded to an Examiner for initial examination in due course.

The Petition Fee of $55.00 will be refunded to applicant by Treasury Check in due course.

Should there be any questions with regard to this letter please contact Sandra Morris; by letter addressed to the Director, Technology Center 3700/2900, PO Box 1450, Alexandria VA 22313-1450; or by telephone at (703) 305-3102 or by facsimile transmission at (703) 305-5679.

John Kittle
Director, Technology Center 3700/2900

UNITED STATES PATENT AND TRADEMARK OFFICE

COMMISSIONER FOR PATENTS
UNITED STATES PATENT AND TRADEMARK OFFICE
P.O. BOX 1450
ALEXANDRIA, VA 22313-1450
www.uspto.gov

JAMES E. BRADLEY
BRACEWELL & PATTERSON
P.O. BOX 61389
HOUSTON, TX 77208-1389

COPY MAILED

MAR 1 1 2004

OFFICE OF PETITIONS

In re Application of :
Alan R. Goodwin :
Application No. 29/149,450 : ON PETITION
Filed: October 9, 2001 :
Attorney Docket No. 033946.000003 :

This is a decision on the petition under 37 CFR 1.137(b), filed February 9, 2004, to revive the above-identified application.

The petition is **GRANTED**.

The above-identified application became abandoned for failure to reply in a timely manner to the Office action under Ex parte Quayle, 1935 Dec. Comm'r Pat. 11 (1935), mailed March 21, 2003, which set a shortened statutory period for reply of two (2) months. No extensions of time under the provisions of 37 CFR 1.136(a) were obtained. Accordingly, the above-identified application became abandoned on May 22, 2003.

The filing of a terminal disclaimer is unnecessary as a condition for revival pursuant to the provisions of 37 CFR 1.137(b) under the current rules. Therefore, the terminal disclaimer filed with the petition will not be processed and the fee of $55.00 is being credited to petitioner's Deposit Account No. 50-0259.

Telephone inquiries concerning this decision should be directed to Wan Laymon at (703) 305-9282.

The application file is being referred to Technology Center AU 2911.

Wan Laymon
Wan Laymon
Petitions Examiner
Office of Petitions
Office of the Deputy Commissioner
for Patent Examination Policy

UNITED STATES PATENT AND TRADEMARK OFFICE

MAY 12 2004

Commissioner for Patents
United States Patent and Trademark Office
P.O. Box 1450
Alexandria, VA 22313-1450
www.uspto.gov

FISH & RICHARDSON P.C.
225 FRANKLIN STREET
BOSTON, MA 02110-2804

#8

In re Application of	:
Patrizio Vinciarelli et al.	:
Serial No.: 29/150,921	: PETITION DECISION
Filed: November 1, 2001	:
Attorney Docket No.: 00614-123001	:

This is a decision on applicants' petition to revive patent application under 37 CFR 1.137(b), filed on January 26, 2004, to revive an unintentionally abandoned application.

This application became abandoned for failure to timely respond to the Notice of Allowance mailed October 6, 2003. Applicant filed a Request for Continued Examination of January 6, 2004; however, as RCE's do not apply to design applications under 37 CFR 1.114, and a proper reply was not received by January 6, 2004, the application was abandoned. This petition followed.

A grantable petition under 37 CFR 1.137(b), as revised December 1, 1997, requires four items: (1) a petition and petition fee; (2) a complete response if not earlier made; (3) a statement that the entire period of delay in prosecution was unintentional; and (4) a terminal disclaimer and disclaimer fee. As the response was filed within one month of abandonment, the requirement for a terminal disclaimer and fee have been waived. The filing of a Continued Prosecution Application (CPA) is considered a proper response.

Applicants' petition is **GRANTED**.

The application will be forwarded to be processed as a CPA in due course.

Should there be any questions with respect to this decision, please contact Sandra Morris; by mail addressed to: Director, Technology Center 3700/2900, P.O. Box 1450, Alexandria, VA 22313-1450; or by telephone at (571) 272-2622.

John Kittle
Director, Technology Center 3700/2900

UNITED STATES PATENT AND TRADEMARK OFFICE

Commissioner for Patents
United States Patent and Trademark Office
P.O. Box 1450
Alexandria, VA 22313-1450
www.uspto.gov

8/23/05

FISH & RICHARDSON PC
225 FRANKLIN ST
BOSTON, MA 02210

In re Application of
Patrizio Vinciarelli et al.
Serial No.: 29/150,921
Filed: November 1, 2001
Attorney Docket No.: 00614-123001

: PETITION DECISION

This is in response to applicant's Petition to Withdraw Holding of Abandonment under 37 CFR 1.181, filed July 21, 2005, based on having responded to the Office action.

This petition is **GRANTED.**

This application was held abandoned based on applicant's failure to respond to the Notice of Allowance mailed December 2, 2004. As no response was received by March 2, 2005, the application was abandoned; this petition followed.

Applicant has stated that a response was timely filed, and has submitted a copy of the Issue Fee transmittal with a Certificate of Mailing date of February 2, 2005, a copy of the returned check, and Post Card receipt. Therefore, the application was abandoned in error

The application will be forwarded to Publication Division for printing as a patent in due course.

Should there be any questions with respect to this decision, please contact Sandra Morris; by mail addressed to: Director, Technology Center 1700/2900, P.O. Box 1450, Alexandria, VA 22313-1450; or by telephone at (571) 272-2622 or by facsimile transmission at (571) 273-2622.

Jacqueline M. Stone

Jacqueline Stone
Director, Technology Center 1700/2900

UNITED STATES PATENT AND TRADEMARK OFFICE

MAY 12 2004

Commissioner for Patents
United States Patent and Trademark Office
P.O. Box 1450
Alexandria, VA 22313-1450
www.uspto.gov

FISH & RICHARDSON P.C.
225 FRANKLIN STREET
BOSTON, MA 02110-2804

#10

In re Application of	:
Patrizio Vinciarelli et al.	:
Serial No.: 29/150,954	: PETITION DECISION
Filed: November 1, 2001	:
Attorney Docket No.: 00614-113001	:

This is a decision on applicants' petition to revive patent application under 37 CFR 1.137(b), filed on January 26, 2004, to revive an unintentionally abandoned application.

This application became abandoned for failure to timely respond to the Notice of Allowance mailed September 30, 2003. As no response was received by December 30, 2003, a Notice of Abandonment was mailed January 20, 2004.This petition followed.

A grantable petition under 37 CFR 1.137(b), as revised December 1, 1997, requires four items: (1) a petition and petition fee; (2) a complete response if not earlier made; (3) a statement that the entire period of delay in prosecution was unintentional; and (4) a terminal disclaimer and disclaimer fee. As the response was filed within one month of receiving the Notice of Abandonment, the requirement for a terminal disclaimer and fee have been waived. The filing of a Continued Prosecution Application (CPA) is considered a proper response.

Applicants' petition is **GRANTED**.

The application will be forwarded to be processed as a CPA in due course.

Should there be any questions with respect to this decision, please contact Sandra Morris; by mail addressed to: Director, Technology Center 3700/2900, P.O. Box 1450, Alexandria, VA 22313-1450; or by telephone at (571) 272-2622.

John Kittle
Director, Technology Center 3700/2900

UNITED STATES PATENT AND TRADEMARK OFFICE

JUL 16 2004

Commissioner for Patents
United States Patent and Trademark Office
P.O. Box 1450
Alexandria, VA 22313-1450
www.uspto.go

OFFICE OF INTELLETUAL PROPERTY COUNSEL
3M INNOVATIVE PROPERTIES COMPANY
P.O. BOX 33427
ST. PAUL, MN 55133-3427

In re Application of	:
Perry S. Dotterman	:
Serial No.: 29/151,008	: PETITION DECISION
Filed: November 15, 2001	:
Attorney Docket No.: 57308US002	:

This is a decision on applicant's Petition under 37 CFR 1.137(b) submitted April 12, 2004, to revive an unintentionally abandoned application.

This application became abandoned for failure to respond to the Final Office action mailed October 7, 2003, which set a three-month statutory period to respond. As no response was received by January 7, 2004, the application was abandoned; applicant then filed this petition.

A grantable petition under 37 CFR 1.137(b), as revised December 1, 1997, requires four items: (1) a petition and petition fee; (2) a complete response if not earlier made; (3) a statement that the entire period of delay in prosecution was unintentional; and (4) a terminal disclaimer and disclaimer fee. Because this petition was filed before the mailing of a Notice of Abandonment, the requirement for a terminal disclaimer has been waived.

Applicant's petition is **GRANTED.**

The application will be forwarded to the Examiner for evaluation of applicant's response in due course.

Should there be any questions with respect to this decision, please contact Sandra Morris; by mail addressed to: Director, Technology Center 3700/2900, P.O. Box 1450, Alexandria, VA 22313-1450; or by telephone at (571) 272-2622.

John Kittle
Director, Technology Center 3700/2900

UNITED STATES PATENT AND TRADEMARK OFFICE

Commissioner for Patents
United States Patent and Trademark Office
P.O. Box 1450
Alexandria, VA 22313-1450
www.uspto.gov

NOV

MICHAEL STRIKER
103 EAST NECK ROAD
HUNTINGTON, NY 11743

#16

In re Application of	:
Joaquin Aubert Capella	:
Serial No.: 29/151,108	: PETITION DECISION
Filed: November 1, 2001	:
Attorney Docket No.: 1860	:

This is a decision on applicant's petition to revive patent application under 37 CFR 1.181, filed on October 1, 2004, to revive an unintentionally abandoned application.

This application became abandoned for failure to timely respond to the Notice of Allowance and Issue fee due mailed October 3, 2003. As no response was received by January 5, 2004, a Notice of Abandonment was mailed August 3, 2004; this petition followed.

Applicant has responded that a response was timely filed, as a Request for Continued Prosecution (RCE) was filed December 31, 2003, as evidenced by the Certificate of Mailing and the copy of the response. However, Applicant is advised that RCE's do not apply to design patent applications under 37 CFR 1.114. Therefore, the application is still abandoned.

Applicant should file a petition to revive under 37 CFR 1.137(b) and a CPA if he wishes to revive the application. A grantable petition under 37 CFR 1.137(b), as revised December 1, 1997, requires four items: (1) a petition and petition fee; (2) a complete response if not earlier made; (3) a statement that the entire period of delay in prosecution was unintentional; and (4) a terminal disclaimer and disclaimer fee. The filing of a Continued Prosecution Application (CPA) would be considered a proper response.

Any renewed petition in order to be considered timely must be filed within TWO MONTHS of the date of mailing of this decision.

Applicant's petition is **DISMISSED.**

Should there be any questions with respect to this decision, please contact Sandra Morris; by mail addressed to: Director, Technology Center 3700/2900, P.O. Box 1450, Alexandria, VA 22313-1450; or by telephone at (571) 272-2622.

John Kittle
Director, Technology Center 3700/2900

UNITED STATES PATENT AND TRADEMARK OFFICE

COMMISSIONER FOR PATENTS
UNITED STATES PATENT AND TRADEMARK OFFICE
P.O. BOX 1450
ALEXANDRIA, VA 22313-1450
www.uspto.gov

MICHAEL STRIKER
103 EAST NECK ROAD
HUNTINGTON, NY 11743

5/18/05

In re Application of
Joaquin Aubert Capella
Serial No.: 29/151,108
Filed: November 1, 2001
Attorney Docket No.: 1860

: PETITION DECISION

This is a decision on applicant's renewed petition to revive patent application under 37 CFR 1.137(b), filed on February 16, 2005, to revive an unintentionally abandoned application.

This application became abandoned for failure to timely respond to the Notice of Allowance and Issue fee due mailed October 3, 2003. As no response was received by January 5, 2004, a Notice of Abandonment was mailed August 3, 2004. Applicant filed a Petition to Revive under 37 CFR 1.181 which was dismissed; this petition followed.

A grantable petition under 37 CFR 1.137(b), as revised December 1, 1997, requires four items: (1) a petition and petition fee; (2) a complete response if not earlier made; (3) a statement that the entire period of delay in prosecution was unintentional; and (4) a terminal disclaimer and disclaimer fee. The filing of a Continued Prosecution Application (CPA) is considered a proper response.

Applicant's petition is **GRANTED**.

The application will be forwarded to be processed as a CPA in due course.

Should there be any questions with respect to this decision, please contact Sandra Morris; by mail addressed to: Director, Technology Center 1700/2900, P.O. Box 1450, Alexandria, VA 22313-1450; or by telephone at (571) 272-2622.

JMStone

Jacqueline Stone
Director, Technology Center 1700/2900

FEB 2 6 2004

Image

AC 2900

I hereby certify that this correspondence is being deposited with the U.S. Postal Service with sufficient postage as First Class Mail, in an envelope addressed to: John Kittle, Director, Technology Center 3700/2900, Commissioner for Patents, P.O. Box 1450, Alexandria, VA 22313-1450, on the date shown below.

Dated: February 24, 2004 Signature: Richard H. Anderson
(Richard H. Anderson)

120

Docket No.: 19036/37845
(PATENT)

IN THE UNITED STATES PATENT AND TRADEMARK OFFICE

In re Design Application of:
Takumi Uemoto

Application No.: 29/151,324 | Confirmation No.: 8923

Filed: December 4, 2001 | Art Unit: 2911

For: MOTORCYCLE | Examiner: L. G. Brooks

REQUEST FOR RECONSIDERATION OF PETITION DECISION

John Kittle
Director, Technology Center 3700/2900
Commissioner for Patents
P.O. Box 1450
Alexandria, VA 22313-1450

Dear Sir:

Applicants request reconsideration of the Petition Decision in the above-identified motorcycle design application.

MPEP 1503.02 V. Photographs And Color Drawings states as follows:

> "If the photographs are not of sufficient quality so that all details in the photographs are reproducible, this will form the basis of subsequent objection to the quality of the photographic disclosure" . . .
>
> "If the details, appearance and shape of all the features and portions of the design are not clearly disclosed in the photographs, this would form the basis of a rejection of the claim under 35 U.S.C. §112, first paragraph, as nonenabling."

The decision (copy attached) dismissing applicant's Petition in the above-identified application clearly states that the photographs themselves comply with 35 U.S.C. §112 and, therefore, are acceptable.

The Petition was dismissed on the basis that the photographs are not of sufficient quality so that all details in the photographs are reproducible.

Attached to applicant's Petition was a diskette from which the acceptable photographs were reproduced to provide the photos of the application, for the purpose of reproducing the photographs (see first paragraph of Petition). Therefore, using the diskette, it is clear that acceptable photographs can be (and were) reproduced, since these produced from the diskette, as filed in this application, comply with 35 U.S.C. §112. To dismiss applicant's Petition on the basis that the quality of photographs reproduced from the photographs themselves is of insufficient quality, as opposed to acceptable reproductions being capable of being made (as applicants have) from the diskette filed in the application, is too literal of an interpretation of MPEP §1503.02V, particularly since the US Patent Office now is encouraging electronic filing of documents.

It is submitted that the decision on applicant's Petition should be reversed and the Petition should be granted since reproductions made from the filed diskette have been expressly ruled to comply with 35 U.S.C. §112.

Dated: February 24, 2004

Respectfully submitted,

By Richard H. Anderson

Richard H. Anderson
Registration No.: 26,526
MARSHALL, GERSTEIN & BORUN LLP
233 S. Wacker Drive, Suite 6300
Sears Tower
Chicago, Illinois 60606-6357
(312) 474-6300
Attorney for Applicant

UNITED STATES PATENT AND TRADEMARK OFFICE

COMMISSIONER FOR PATENTS
UNITED STATES PATENT AND TRADEMARK OFFICE
P.O. BOX 1450
ALEXANDRIA, VA 22313-1450
www.uspto.gov

RICHARD H. ANDERSON
MARSHALL, GERSTEIN & BORUN LLP
233 S. WACKER DRIVE, SUITE 6300
SEARS TOWER
CHICAGO, ILLINOIS 60606-6357

In re Application of Takumi Uemoto Application No. 29/151,324 Filed: December 4, 2001 Attorney Docket No. 19036/37845	PETITION DECISION

This is a decision on the petition under 37 CFR 1.181 received November 10, 2003, requesting withdraw of the examiner's objection to the formal photographs received June 27, 2003, copy machine reproductions of which are attached.

The petition is **Dismissed**.

REVIEW OF THE RECORD

A review of the file reveals that an Office action was mailed on July 23, 2003 objecting to the photographs received June 27, 2003, as not being of sufficient clarity to enable reproduction of the design in the printed patent. The Office action specifically identified various parts of the design as being black and therefore too dark to be reproducible in the printed patent. While not specifically cited in this Office action, the objection to the photographs was based on the criteria set forth in the last sentence of 37 CFR 1.84(b)(1) which was cited in support of the initial objection to the photographs in the Office action mailed March 25, 2003. The objection to the photographs having been twice made was indicated as FINAL in the Office action mailed July 23, 2003. This petition followed.

ISSUE FOR REVIEW

The issue that petitioner requests review of is the examiner's objection to the photographs received June 27, 2003, not being of sufficient clarity to enable reproduction of the design in the printed patent. Petitioner seeks supervisory intervention for withdrawal of the examiner's objection to the photographs received June 27, 2003 since they comply with "35 U.S.C. 112, 37 CFR and the MPEP". In addition, petitioner relies on MPEP 1503.02 V., which states that photographs are accepted "where the invention is shown more clearly in a photograph". Furthermore, petitioner contends that the exact shape and appearance of all surfaces of the design

can be adequately understood from the photographs received June 27, 2003. Finally, petitioner cites 2 recently issued design patents in which photographs were accepted showing articles having solid black portions.

DECISION

The last sentence of 37 CFR 1.84(b)(1) states "[T]he photographs must be of sufficient quality so that all details in the photographs are reproducible in the printed patent." Furthermore, in section 1503.02 V. of the MPEP it is stated that "[I]f the photographs are not of sufficient quality so that all details in the photographs are reproducible, this will form the basis of subsequent objection to the quality of the photographic disclosure." The examiner's action in the present application is seen to comply with the above criteria. That is, the examiner's objection to the photographs received June 27, 2003, as not being of sufficient clarity so as to enable reproduction of the design in the printed patent is considered proper. Specifically, due to the solid black surfaces of the radiator, frame elements, engine components, foot pegs, handle grips, tires and license plate bracket the exact appearance and details of these parts of the design are not clearly or adequately depicted in the referenced photographs so as to permit there reproduction in the printed patent. While it is agreed that photographs are acceptable where the invention is shown more clearly, such is not the case with the photographs presently of record in this application for the reasons specified above.

Petitioner's statement that the photographs received June 27, 2003, comply with 35 U.S.C. 112, is of no relevance with respect to this decision since no rejection of the claim under this section of the statute is currently outstanding in this application.

With regards to the 2 recently issued design patents identified by petitioner, be advised that MPEP 1701 precludes an employee of the United States Patent and Trademark Office from commenting on issued patents. However, petitioner is reminded that each application must stand on its own facts and its own merits.

CONCLUSION

1. The petition is **dismissed.**

2. Any questions with regard to this decision should be directed to John Kittle, by letter addressed to the Director, Technology Center 3700/2900, P.O. Box 1450 Alexandria, VA 22313-1450, or by telephone at (703) 308-0873.

John Kittle
Director, Technology Center 3700/2900

UNITED STATES PATENT AND TRADEMARK OFFICE

UNITED STATES DEPARTMENT OF COMMERCE
United States Patent and Trademark Office
Address: COMMISSIONER FOR PATENTS
P.O. Box 1450
Alexandria, Virginia 22313-1450
www.uspto.gov

APPLICATION NO.	FILING DATE	FIRST NAMED INVENTOR	ATTORNEY DOCKET NO.	CONFIRMATION NO.
29/151,324	12/04/2001	Takumi Uemoto	19036/37845	8923

7590 03/02/2004

MARSHALL, GERSTEIN & BORUN
6300 Sears Tower
233 South Wacker Drive
Chicago, IL 60606-6357

EXAMINER
BROOKS, LINDA G

ART UNIT	PAPER NUMBER
2911	

DATE MAILED: 03/02/2004

Please find below and/or attached an Office communication concerning this application or proceeding.

UNITED STATES PATENT AND TRADEMARK OFFICE

COMMISSIONER FOR PATENTS
UNITED STATES PATENT AND TRADEMARK OFFICE
P.O. BOX 1450
ALEXANDRIA, VA 22313-1450
www.uspto.gov

RICHARD H. ANDERSON
MARSHALL, GERSTEIN & BORUN LLP
233 S. WACKER DRIVE, SUITE 6300
SEARS TOWER
CHICAGO, ILLINOIS 60606-6357

In re Application of	:
Takumi Uemoto	:
Application No. 29/151,324	: PETITION DECISION
Filed: December 4, 2001	:
Attorney Docket No. 19036/37845	:

This is a decision on the petition under 37 CFR 1.181 received November 10, 2003, requesting withdraw of the examiner's objection to the formal photographs received June 27, 2003, copy machine reproductions of which are attached.

The petition is **Dismissed**.

REVIEW OF THE RECORD

A review of the file reveals that an Office action was mailed on July 23, 2003 objecting to the photographs received June 27, 2003, as not being of sufficient clarity to enable reproduction of the design in the printed patent. The Office action specifically identified various parts of the design as being black and therefore too dark to be reproducible in the printed patent. While not specifically cited in this Office action, the objection to the photographs was based on the criteria set forth in the last sentence of 37 CFR 1.84(b)(1) which was cited in support of the initial objection to the photographs in the Office action mailed March 25, 2003. The objection to the photographs having been twice made was indicated as FINAL in the Office action mailed July 23, 2003. This petition followed.

ISSUE FOR REVIEW

The issue that petitioner requests review of is the examiner's objection to the photographs received June 27, 2003, not being of sufficient clarity to enable reproduction of the design in the printed patent. Petitioner seeks supervisory intervention for withdrawal of the examiner's objection to the photographs received June 27, 2003 since they comply with "35 U.S.C. 112, 37 CFR and the MPEP". In addition, petitioner relies on MPEP 1503.02 V., which states that photographs are accepted "where the invention is shown more clearly in a photograph". Furthermore, petitioner contends that the exact shape and appearance of all surfaces of the design

can be adequately understood from the photographs received June 27, 2003. Finally, petitioner cites 2 recently issued design patents in which photographs were accepted showing articles having solid black portions.

DECISION

The last sentence of 37 CFR 1.84(b)(1) states "[T]he photographs must be of sufficient quality so that all details in the photographs are reproducible in the printed patent." Furthermore, in section 1503.02 V. of the MPEP it is stated that "[I]f the photographs are not of sufficient quality so that all details in the photographs are reproducible, this will form the basis of subsequent objection to the quality of the photographic disclosure." The examiner's action in the present application is seen to comply with the above criteria. That is, the examiner's objection to the photographs received June 27, 2003, as not being of sufficient clarity so as to enable reproduction of the design in the printed patent is considered proper. Specifically, due to the solid black surfaces of the radiator, frame elements, engine components, foot pegs, handle grips, tires and license plate bracket the exact appearance and details of these parts of the design are not clearly or adequately depicted in the referenced photographs so as to permit there reproduction in the printed patent. While it is agreed that photographs are acceptable where the invention is shown more clearly, such is not the case with the photographs presently of record in this application for the reasons specified above.

Petitioner's statement that the photographs received June 27, 2003, comply with 35 U.S.C. 112, is of no relevance with respect to this decision since no rejection of the claim under this section of the statute is currently outstanding in this application.

With regards to the 2 recently issued design patents identified by petitioner, be advised that MPEP 1701 precludes an employee of the United States Patent and Trademark Office from commenting on issued patents. However, petitioner is reminded that each application must stand on its own facts and its own merits.

CONCLUSION

1. The petition is **dismissed.**

2. Any questions with regard to this decision should be directed to John Kittle, by letter addressed to the Director, Technology Center 3700/2900, P.O. Box 1450 Alexandria, VA 22313-1450, or by telephone at (703) 308-0873.

John Kittle
Director, Technology Center 3700/2900

UNITED STATES PATENT AND TRADEMARK OFFICE

COMMISSIONER FOR PATENTS
UNITED STATES PATENT AND TRADEMARK OFFICE
P.O. BOX 1450
ALEXANDRIA, VA 22313-1450
www.uspto.gov

JUL 16 2004

RICHARD H. ANDERSON
MARSHALL, GERSTEIN & BORUN LLP
233 S. WACKER DRIVE, SUITE 6300
SEARS TOWER
CHICAGO, ILLINOIS 60606-6357

In re Application of	:
Takumi Uemoto	:
Application No. 29/151,324	: PETITION DECISION
Filed: December 4, 2001	:
Attorney Docket No. 19036/37845	:

This is a decision on the petition under 37 CFR 1.137(a) to withdraw holding of abandonment and re-start time period for response under 37 CFR 1.134 and 1.135(c) and alternatively under 37 CFR 1.137(b) to revive an unintentionally abandoned application received February 26, 2004.

The petition is **Dismissed**.

This application became abandoned for failure to overcome the objection to the photographs set forth in the Office action mailed July 23, 2003. As no response was submitted overcoming the above objection within the full six month statutory period from the mailing of the referenced Office action the application is abandoned. This petition followed.

Petitioner submits that the non-recognition of the Final Office Action of July 23, 2003 as a Final Objection rather than a Final Rejection, together with the U.S. Patent Office not notifying applicants that the Notice of Appeal, filed November 5, 2003, was improperly filed and would not extend the time for response, together with applicants not receiving the decision on the Petition until February 23, 2003 establish facts that show that the delay was unavoidable (37 C.F.R. 1.137(a)) and call for withdrawal of the holding of abandonment in this application. However, section 711.03(c)2 of the MPEP states that "a delay caused by an applicant's lack of knowledge or improper application of the patent statute, rules of practice or the MPEP is not rendered "unavoidable" due to: (A) the applicant's reliance upon oral advice from USPTO employees; or (B) the USPTO's failure to advise the applicant of any deficiency in sufficient time to permit the applicant to take corrective action. See In re Sivertz, 227 USPQ 255, 256 (Comm'r Pat. 1985).

Inasmuch as the facts set forth by petitioner are not appropriate to establish "unavoidable" delay as indicated in section 711.03(c)2 of the MPEP the request under 37 CFR 1.137(a) to withdraw the holding of abandonment and re-start time period for response is denied.

Since the facts set forth in the petition do not establish "unavoidable" delay under 37 CFR 1.137(a) the petition will now be alternatively considered under 37 CFR 1.137(b) to revive an unintentionally abandoned application as requested therein.

A grantable petition under 37 CFR 1.137(b), as revised December 1, 1997, requires four items: (1) a petition and petition fee; (2) a complete response if not earlier made; (3) a statement that the *entire* period of delay in prosecution was unintentional; and (4) a terminal disclaimer and disclaimer fee of $55.00. Applicant's petition lacks items (3) and (4), the statement that the *entire* period of delay in prosecution was unintentional and a terminal disclaimer and disclaimer fee of $55.00. However, because the Petition was filed within one month of abandonment, the requirement for a terminal disclaimer and fee has been waived.

Any renewed petition in order to be considered timely must be filed within **TWO MONTHS** of the date of mailing of this decision.

Should there be any questions with regard to this letter please contact James Gandy, by letter addressed to the Director, Technology Center 3700/2900, P.O. Box 1450 Alexandria, VA 22313-1450, or by telephone at (571) 272-2579.

John Kittle
Director, Technology Center 3700/2900

UNITED STATES PATENT AND TRADEMARK OFFICE

COMMISSIONER FOR PATENTS
UNITED STATES PATENT AND TRADEMARK OFFICE
P.O. BOX 1450
ALEXANDRIA, VA 22313-1450
www.uspto.gov

Paper No. 13

Marguerite Del Valle
Trademark and Patent
Counselors of America, P.C.
19th Floor
915 Broadway
New York, NY 10010-7108

COPY MAILED
JAN 20 2004
OFFICE OF PETITIONS

In re Application of :
Fawaz Gruosi :
Application No. 29/151,689 :
Filed: November 29, 2001 :
Attorney Docket No. :
819.0111 :

This is a decision on the Petition Pursuant to 37 CFR 1.10© For Corrected Filing Date, which is properly treated under 37 CFR § 1.10(d), filed November 3, 2003, requesting that the above-identified application be accorded a filing date of November 29, 2001, rather than the presently accorded filing date of December 4, 2001.

Petitioner alleges that the application was deposited in Express Mail service on November 29, 2001. Petitioner has filed the appropriate documentary and corroborating evidence from the USPS demonstrating that November 29, 2001 was the date the correspondence was deposited Express Mail Post Office to Addressee.

In view of the above, the petition is **granted**. No fee is necessary.

This application file will be forwarded to the Office of Initial Patent Examination for correction of the filing date to November 29, 2001.

Telephone inquiries concerning this matter should be directed to the undersigned at (703) 305-0014.

Derek L. Woods
Petitions Attorney
Office of Petitions

UNITED STATES PATENT AND TRADEMARK OFFICE

DEC 06 2004

Commissioner for Patents
United States Patent and Trademark Office
P.O. Box 1450
Alexandria, VA 22313-1450
www.uspto.gov

CHARLES J. RUGGIERO
OHLANDT, GREELEY, RUGGIERO
& PERLE, L.L.P.
ONE LANDMARK SQUARE, 10TH FLOOR
STAMFORD, CT 06901-2682

In re Application of	:
David Carpenter	:
Serial No.: 29/151,726	: PETITION DECISION
Filed: November 13, 2001	:
Attorney Docket No.: 2185.003USD	:

This is a decision on applicant's petition to revive patent application under 37 CFR 1.137(b), filed on October 4, 2004, to revive an unintentionally abandoned application.

This application became abandoned for failure to timely respond to the Office action mailed November 17, 2003. Applicant submitted an amendment with an Extension of Time on February 19, 2004, which did not overcome the Final rejection, as noted in the Advisory action mailed April 30, 2004. Applicant filed a Request for Continued Prosecution (RCE) on May 17, 2004. However, applicant was advised that RCE's do not apply to design patent applications under 37 CFR 1.114 on June 25, 2004. Therefore, the case is still abandoned.

A grantable petition under 37 CFR 1.137(b), as revised December 1, 1997, requires four items: (1) a petition and petition fee; (2) a complete response if not earlier made; (3) a statement that the entire period of delay in prosecution was unintentional; and (4) a terminal disclaimer and disclaimer fee. Applicant's petition lacks items (2) and (4). A Continued Prosecution Application (CPA) and fee (2) must still be filed, as well as a terminal disclaimer (4) and fee.

Any renewed petition in order to be considered timely must be filed within TWO MONTHS of the date of mailing of this decision.

Applicant's petition is **DISMISSED.**

Should there be any questions with respect to this decision, please contact Sandra Morris; by mail addressed to: Director, Technology Center 3700/2900, P.O. Box 1450, Alexandria, VA 22313-1450; or by telephone at (571) 272-2622.

John Kittle
Director, Technology Center 3700/2900

UNITED STATES PATENT AND TRADEMARK OFFICE

COMMISSIONER FOR PATENTS
UNITED STATES PATENT AND TRADEMARK OFFICE
P.O. BOX 1450
ALEXANDRIA, VA 22313-1450
www.uspto.gov

APR 18 2005

WHYTE HIRSCHBOECK DUDEK
555 EAST WELLS STREET
SUITE 1900
MILWAUKEE, WI 53202-3819

In re Application of
David Carpenter
Serial No.: 29/151,726
Filed: November 13, 2001
Attorney Docket No.: AUC-32813

: PETITION DECISION

This is a decision on applicant's renewed petition to revive patent application under 37 CFR 1.137(b), filed on February 4, 2005, to revive an unintentionally abandoned application.

This application became abandoned for failure to timely respond to the Office action mailed November 17, 2003. Applicant submitted an amendment with an Extension of Time on February 19, 2004, which did not overcome the Final rejection, as noted in the Advisory action mailed April 30, 2004. Applicant filed a Request for Continued Prosecution (RCE) on May 17, 2004. However, applicant was advised that RCE's do not apply to design patent applications under 37 CFR 1.114 on June 25, 2004. Applicant filed a Petition October 4, 2004, which was dismissed, as it did not contain a Continued Prosecution Application and fee, nor a Terminal disclaimer and fee.

Applicant's petition is now **GRANTED.**

The $130.00 Terminal disclaimer fee and $200.00 CPA fee will be charged to applicant's Deposit Account 23-2053, as directed.

The application will be forwarded to processed as a CPA in due course.

Should there be any questions with respect to this decision, please contact Sandra Morris; by mail addressed to: Director, Technology Center 1700/2900, P.O. Box 1450, Alexandria, VA 22313-1450; or by telephone at (571) 272-2622.

JMStone

Jacqueline Stone
Director, Technology Center 1700/2900

UNITED STATES PATENT AND TRADEMARK OFFICE

Commissioner for Patents
United States Patent and Trademark Office
P.O. Box 1450
Alexandria, VA 22313-1450
www.uspto.gov

Paper No. 13

BEVER HOFFMAN & HARMS LLP
TRI-VALLEY OFFICE
1432 CONCANNON BLVD BLDG G
LIVERMORE CA 94550

COPY MAILED
JUN 2 9 2004
OFFICE OF PETITIONS

In re Application of	:	
Cook, et al.	:	
Application No. 29/152,434	:	DECISION ON PETITION
Filed: December 14, 2001	:	
Attorney Docket No. ULT-008	:	

This is a decision on the petition filed on January 27, 2004[1], pursuant to 37 CFR 1.137(b), to revive the above-identified application.

The petition is **GRANTED**.

The above-identified application became abandoned for failure to timely file a response to the non-final Office action, mailed August 23, 2002, which set a shortened statutory period for reply of one (1) month. No extensions of time for reply under the provisions of 37 CFR 1.136(a) were obtained. No response having been received, the above-identified application became abandoned on September 24, 2002. A courtesy Notice of Abandonment was mailed on May 19, 2003.

---

[1] Petitioner resupplied a copy of the petition on June 7, 2004, together with an itemized postcard receipt evidencing that the petition was previously filed on January 27, 2004.

With the instant petition, petitioner paid the petition fee, made the proper statement of unintentional delay, and submitted the required reply in the form of an amendment and response to the restriction requirement.

The application file is being forwarded to Group Art Unit 2913 for consideration of the amendment/response, and for entry of the terminal disclaimer, both filed January 27, 2004.

Telephone inquiries regarding this decision should be directed to the undersigned at (703) 305-0272.

Cliff Congo
Petitions Attorney
Office of Petitions

UNITED STATES PATENT AND TRADEMARK OFFICE

Commissioner for Patents
United States Patent and Trademark Office
Washington, D.C. 20231
www.uspto.gov

Paper No. 6

Reese Taylor, Esq.
Renner, Kenner, Greive, Bobak, Taylor & Weber
First National Tower, Fourth Floor
Akron, OH 44308-1456

COPY MAILED

JUL 0 3 2002

OFFICE OF PETITIONS

ON PETITION

In re Application of :
Yeager :
Application No. 29/152,784 :
Filed: January 2, 2002 :
Attorney Docket No. 01200 :

This is a decision on the petition under 37 CFR 1.183, filed March 5, 2002 and supplemented April 2, 2002, requesting waiver of the rules and requesting a filing date no later than October 24, 2001.

The petition is **DISMISSED**.

Any request for reconsideration must be submitted within TWO (2) MONTHS from the mail date of this decision. Extensions of time under 37 CFR 1.136(a) are NOT permitted. The reconsideration request should include a cover letter entitled "Renewed Petition under 37 CFR 1.183." This is **not** a final agency action within the meaning of 5 U.S.C. § 704.

In order for a petition under 37 CFR 1.183 to be granted, petitioner must demonstrate the existence of an extraordinary situation where justice requires waiver of one or more federal regulations. It is the responsibility of the Commissioner to determine the definitions of the terms "extraordinary" and "as justice requires" as the terms are used in 37 CFR 1.183.[1] The Commissioner drafted the federal regulations which may be waived including 37 CFR 1.183. The Commissioner is the party responsible for determining when a party has demonstrated that an "extraordinary" situation exists such that "justice requires" waiver of a federal regulation.

---

[1] See Bowles, Price Administrator v. Seminole Rock & Sand Co., 325 U.S. 410, 413-414, 89 L. Ed. 1700, 1702, 65 S. Ct. 1215, 1217 (1945) ("Since this involves the interpretation of an administrative regulation a court must necessarily look to the administrative construction of the regulation if the meaning of the words used is in doubt. . . . [T]he ultimate criterion is the administrative interpretation, which becomes of controlling weight unless it is plainly erroneous or inconsistent with the regulation.")

"In the specialized field of patent law, ... the Commissioner of Patent and Trademarks is primarily responsible for the application and enforcement of the various narrow and technical statutory and regulatory provisions. His interpretation of those provisions is entitled to considerable deference." Rydeen v. Quigg, 748 F.Supp. 900, 904, 16 U.S.P.Q.2d (BNA)1876 (D.D.C. 1990), aff'd without opinion (Rule 36), 937 F.2d 623 (Fed. Cir. 1991) (citing Morganroth v. Quigg, 885 F.2d 843, 848, 12 U.S.P.Q.2d (BNA) 1125 (Fed. Cir. 1989); Ethicon, Inc. v. Quigg, 849 F.2d 1422, 1425, 7 U.S.P.Q.2d (BNA) 1152 (Fed. Cir. 1988) ("an agency' interpretation of a statute it administers is entitled to deference"); see also Chevron U.S.A. Inc. v. Natural Resources Defense Council, Inc., 467 U.S. 837, 844, 81 L. Ed. 694, 104 S. Ct. 2778 (1984) ("if the statute is silent or ambiguous with respect to the specific issue, the question for the court is whether the agency's answer is based on a permissible construction of the statute.")).

Petitioner has failed to establish that the instant situation is an extraordinary situation where justice requires waiver of the rules.

In determining when waiver is appropriate, the Office *may* consider the circumstances when courts have exercised their equitable powers to waive requirements of a statute or regulation on behalf of a party. Courts are permitted to waive certain statutory requirements such as statutory time limits.[2] Courts, in determining when waiver is proper, have required due diligence and have required more than a "garden variety claim of excusable neglect."[3] The Federal Circuit has stated, "Equitable powers . . . should not be invoked to excuse the performance of a condition by a party that has not acted with reasonable due care and diligence."[4] Factors which may not justify tolling include: pro se status, illiteracy, deafness, lack of legal training, lack of knowledge of the law, lack of knowledge of a legal process, and lack of legal representation.[5] An attorney's lack of knowledge, misinterpretation of a law, miscalculation of a time period, and failure to exercise due care and diligence will not justify waiver.[6]

---

[2] See Wood-Ivey Sys. Corp. v United States, 4 F.3d 961, 964 (Fed. Cir. 1993) (Plager, J., concurring) ("Since Irwin [v. Department of Veterans Affairs, 498 U.S. 89, 112 L. Ed. 2d 435, 111 S. Ct. 453, (1990)], compliance with statutory time limits is no longer jurisdictional, in the old sense that when a Congressionally specified time limit had expired a court had no power to entertain the case. The presumption is now to the contrary. The court has jurisdiction to entertain the suit and to determine on the merits if equitable relief from the time bar is warranted.")

[3] See Wiggins v. State Farm Fire and Casualty Co., 153 F. Supp. 2d 16, 21 (D. D.C. 2001) ("A court can equitably toll the statute of limitations . . . plaintiff will not be allowed extra time to file unless he has exercised due diligence, and the plaintiff's excuse must be more than a 'garden variety claim of excusable neglect.'") (citations omitted).

[4] U.S. v. Lockheed Petroleum Services, 709 F.2d 1472, 1475 (Fed. Cir. 1983) (citations omitted) ("Lockheed had several means at its disposal which it could have employed to guarantee compliance with the regulation, yet it neglected to use any of them. Equitable powers . . . should not be invoked to excuse the performance of a condition by a party that has not acted with reasonable due care and diligence."); See also: Grymes v. Sanders et al., 93 U.S. 55, 61; 23 L. Ed. 798, 801 (1876) ("Mistake, to be available in equity, must not have arisen from negligence. . . . The party complaining must have exercised at least the degree of diligence 'which may be fairly expected from a reasonable person.') (citing Kerr on Fraud and Mistake, 407); Garcia v. Office of Personnel Management, 2001 U.S. App. LEXIS 21616, 6 (Fed. Cir. 2001) ("Equity will not intervene, however, to protect a claimant from his or her own failure to exercise due diligence in preserving their legal rights.") (citing Irwin v. Department of Veterans Affairs, 498 U.S. 89, 95 (1990)); Goetz & Goetz v. Secretary of Health and Human Services, 2001 U.S. App. LEXIS 943, 5 (Fed. Cir. 2001) ("the special master's finding of a lack of due diligence was not arbitrary, capricious, or an abuse of discretion, and precludes the application of equitable tolling.") (citing Baldwin County Welcome Ctr. V. Brown, 466 U.S. 147, 151, 80 L. Ed. 2d 196, 104 S. Ct. 1723 (1984) which states, "One who fails to act diligently cannot invoke equitable principles to excuse their lack of diligence.")

[5] See Felder v. Johnson, 204 F.3d 168 171-172 (5th Cir. 2000) (Pro se status is not "rare and exceptional" circumstance, but is typical of those bringing a 28 U.S.C. § 2254 claim. "Mere ignorance of the law or lack of knowledge of filing deadlines does not justify equitable tolling or other exceptions to a law's requirements.") (citing United States v. Flores, 981 F.2d 231, 236 (5th Cir. 1993) as "holding pro se status, illiteracy, deafness, and lack of legal training are not external factors excusing abuse of the writ."; citing Barrow v. New Orleans S.S. Ass'n, 932 F.2d 473, 478 (5th Cir. 1991) as "holding equitable tolling . . . within the Age Discrimination in Employment Act not warranted by plaintiff's unfamiliarity with legal process, his lack of representation, or his ignorance of his legal rights.", (other citations omitted)).

[6] See Harris v. Hutchinson, 209 F.3d 325, 330-331 (4th Cir. 2000) (Plaintiff argues that he relied on "negligent and erroneous advice" of his attorney. Attorney agrees his advice was erroneous. The court holds, "[A] mistake by a party's counsel in interpreting a statute of limitations does not present the extraordinary circumstance beyond the party's control where equity should step in to give the party the benefit of his erroneous understanding.") (citing Taliani v. Chrans, 189 F.3d 597, 598 (7th Cir. 1999) as "holding that a lawyer's miscalculation of a limitations period is not a valid basis for equitable tolling."; citing Sandvik v. United States, 177 F.3d 1269, 1272 (11th Cir. 1999) (per curiam) as "refusing to toll the limitations period where the prisoner's delay was assertedly the result of a lawyer's decision to mail the petition by ordinary mail rather than to use some form of expedited delivery."; citing Gilbert v. Secretary of Health and Human Services, 51 F.3d 254, 257 (Fed. Cir. 1995) as "holding that a lawyer's mistake is not a valid basis for equitable tolling."; other citations omitted.)

A party's inadvertent failure to comply with the requirements of a rule, such as 37 CFR 1.10, is simply not an extraordinary situation that would warrant waiver of a rule under 37 CFR 1.183.[7]

Petitioner has failed to establish that petitioner exercised reasonable, due care and diligence. A reasonable person acting with due care and diligence would have filed the application in compliance with 37 CFR 1.10 to ensure its timely filing in the PTO, as well as preserve adequate evidence of such filing.[8] Petitioner failed to file the application in compliance with 37 CFR 1.10.

An applicant may delay action until the end of the time period for reply. In doing so, however, the applicant must assume the risk attendant to such delay. Petitioner was aware the application needed a filing date of October 24, 2001, but waited until October 17, 2001, to mail the application. Petitioner risked the application taking more than a week to reach the Office.

Each time an application is mailed, the risk exists that the package will be delayed or completely lost. Petitioner chose not to take advantage of the provisions of 37 CFR 1.10 and to assume such a risk. Petitioner is bound by the consequences of such a choice.

Petitioner has failed to establish that justice requires waiver of the rule. Petitioner has not demonstrated that the application will be denied patentability due to the later filing date. The fact that it *might* be denied patentability is insufficient.[9] Petitioner has not shown that the assignment of the January 2, 2002 filing date to the instant application has resulted in any actual harm to petitioner. If the patentability of the application is not affected by the assignment of a later filing date, then justice does not require waiver of the rule.

Since the petition lacks a showing that this is an extraordinary situation in which "justice requires" suspension of the rules, the petition under 37 CFR 1.183 is subject to dismissal.

---

[7] See Honigsbaum v. Lehman, 903 F. Supp. 8, 37 USPQ2d 1799 (D.D.C. 1995) (Commissioner did not abuse his discretion in refusing to waive requirements of 37 CFR 1.10(c) in order to grant filing date to patent application, where applicant failed to produce Express Mail customer receipt or any other evidence that application was actually deposited with USPS as Express Mail), aff'd without opinion, 95 F.3d 1166 (Fed. Cir.1996); Nitto Chemical Industry Co., Ltd. v. Comer, 39 USPQ2d 1778, 1782 (D.D.C. 1994) (Commissioner's refusal to waive requirements of 37 CFR 1.10 in order to grant priority filing date to patent application not arbitrary and capricious, because failure to comply with the requirements of 37 CFR 1.10 is an "avoidable" oversight that could have been prevented by the exercise of ordinary care or diligence, and thus not an extraordinary situation under 37 CFR 1.183); Vincent v. Mossinghoff, 230 USPQ 621 (D.D.C. 1985) (Misunderstanding of 37 CFR 1.8 not unavoidable delay in responding to Office Action); Gustafson v. Strange, 227 USPQ 174 (Comm'r Pats. 1985) (Counsel's unawareness of 37 CFR 1.8 not extraordinary situation warranting waiver of a rule); In re Chicago Historical Antique Automobile Museum, Inc., 197 USPQ 289 (Comm'r Pats. 1978) (Since certificate of mailing procedure under 37 CFR 1.8 was available to petitioner, lateness due to mail delay not deemed to be extraordinary situation).

[8] "The procedures set out in the PTO's regulations are designed to provide the type of direct evidence needed to prove when and to where a lost amendment [or other paper] was sent. Had plaintiff's counsel followed these procedures, as a 'prudent and careful man' would have done in conducting 'his most important business,' then he would have been able to provide sufficient evidence to support a showing of unavoidable delay." Krahn v. Commissioner of Patents and Trademarks, 15 U.S.P.Q.2d (BNA) 1823 (E.D. Va. 1990).

[9] See Nitto Chemical Industry Co., Ltd. v. Comer, 39 USPQ2d 1778, 1782 (D.D.C. 1994) ("As a final matter, Nitto suggests that its patent applications have been prejudiced by the Commissioner's failure to give the applications a filing date of February 28, 1991. Opp. at 9. The Commissioner has acknowledged that, without the benefit of the foreign patent filing date of February 28, 1990, the patentability of Nitto's inventions could be adversely affected. Motion at 4. However, Nitto did not submit evidence showing that the inventions claimed in the two applications have been, or will be, denied patentability over applications filed between February 28, 1990, and May 2, 1991. Reply at 3-4. Thus, the Commissioner had no basis on which to determine whether "justice required" him to award Nitto's applications the earlier filing date.")

Petitioner supplies a copy of a Notice issued by the Office related to mail delays. The Notice states,

> The United States Patent and Trademark Office (USPTO) since October 21, 2001, has been experiencing an interruption in delivery of United States Mail sent to our 20231 zip code. . . . For time sensitive correspondence (e.g., after final amendments) that were mailed during the last few weeks, it may be desirable to contact the examiner or TC Customer Service Center to determine whether the paper has been received and whether alternative delivery options (e.g., facsimile) should be considered. Under such circumstances, the normal guidance against duplicate papers is not applicable. . . . Inquiries regarding submission of patent correspondence should be directed to Mark Polutta, Hiram Bernstein, Robert Clarke or Eugenia Jones, Legal Advisors in the Office of Patent Legal Administration, all of whom may be reached by telephone at 703-308-6906 or by electronic mail message via the Internet addressed to Mark.Polutta@uspto.gov, Hiram.Bernstein@uspto.gov, Robert.Clarke@uspto.gov, or Eugenia.Jones@uspto.gov.

The Office alerted the general public of the existence of the delay and informed practitioner's that if correspondence was time sensitive, the Office should be contacted to confirm receipt of such correspondence. The record fails to indicate that petitioner ever contacted the Office.

The Notice also makes clear that applications mailed under 37 CFR 1.8 will be given a filing date as of the date of receipt. The Notice states (emphasis added),

> Except as provided in 37 CFR 1.8 and 1.10, mail sent through the USPS will be given the date it is received by the USPTO as its receipt date. . . . If a party files correspondence in accordance with the provisions of 37 CFR 1.8 or 1.10, that correspondence will be considered timely under 37 CFR 1.8 (in situations in which 37 CFR 1.8 is applicable) or filed in the USPTO on the "date-in" indicated on the Express Mail mailing label (in situations in which 37 CFR 1.10 is applicable, such as the filing of new patent or trademark applications), regardless of any USPS delay in ultimately delivering the correspondence to the USPTO and any consequent delay by the USPTO in treating the correspondence (e.g., issuing a Filing Receipt for new applications). . . .
>
> As authorized by 35 U.S.C. § 21(a), 37 CFR 1.10 permits the USPTO to treat correspondence delivered by the "Express Mail Post Office to Addressee" service of the USPS as being filed in the USPTO on the date of deposit with the USPS as shown by the "date in" on the "Express Mail" mailing label. **Use of this procedure can, therefore, obviate risks of delay in postal delivery.** . . .
>
> 37 CFR 1.8 permits applicants to certify that papers were mailed to the USPTO by first class mail on a particular date. The certificate of mailing procedure does **not** apply to filing of U.S. national and international patent applications. . . .

Petitioner failed to take steps, such as mailing the application in compliance with 37 CFR 1.10, to obviate the risk of postal delay. The petition lacks a showing that this is an extraordinary situation in which "justice requires" suspension of the rules, and the petition under 37 CFR 1.183 is subject to dismissal.

Since petitioner has not established to the satisfaction of the Commissioner that the present application was, in fact, deposited with the USPS on or before October 24, 2001, the petition is subject to dismissal.

A petitioner may establish a filing date by two methods.

First, he may prove a date of actual receipt by the Office. The date of receipt may be proven by the submission of a stamped postcard receipt.[10]

Second, petitioner may provide a showing in compliance with 37 CFR 1.10. The filing date for an application mailed by Express Mail in compliance with 37 CFR 1.10 is the date the application is mailed.

The scope of 37 CFR 1.10 and evidence which may establish compliance with 37 CFR 1.10

Public Law 97-247, 96 Stat. 317 (1982), amended 35 U.S.C. § 21 to permit, but not require, the Office to prescribe that any paper or fee required to be filed in the Office be considered filed in the Office on the date on which it was deposited with the U.S. Postal Service. While 35 U.S.C. 21 grants the Director the authority to consider any paper or fee filed in the USPTO on the date the paper or fee was deposited with the USPS, the Director has specifically refused to exercise that authority in favor of mail other than Express Mail.

The suggestion that 37 CFR 1.8 be applicable to application papers deposited with the U.S. Postal Service for purposes of obtaining a filing date was considered *and expressly rejected.*[11] 37 CFR 1.8 provides a procedure by which the timely filing of papers and fees deposited with the U.S. Postal Service may be established *without independent corroboration by an employee of the U.S. Postal Service.* The criticality of an application filing date was considered adequate to justify independent verification by an employee of the U.S. Postal Service of the date of deposit of the application papers with the U.S. Postal Service. Put simply, the insertion by a disinterested employee of the U.S. Postal Service of the date of deposit in the U.S. Postal Service by Express Mail on the Express Mail label of the envelope containing application papers is the

---

[10] The USPTO has established a practice of providing a receipt for papers filed in the USPTO to any applicant desiring a receipt. The practice, which was has been in existence for many years and is well publicized, requires that any paper for which a receipt is desired be filed in the USPTO with a self-addressed postcard identifying the paper. Upon receipt of the correspondence, the Patent and Trademark Office will check the listing on the post card against the papers submitted, making sure that all items listed are present and will then stamp the postcard with an Official date stamp and place the post card in the outgoing mail. "A post card receipt which itemizes and properly identifies the papers which are being filed serves as *prima facie* evidence of receipt in the PTO of all items listed thereon by the PTO." See section 503, Manual Of Patent Examining Procedure (MPEP 503).

[11] The final rulemaking published on January 20, 1983, at 48 FR 2696-2714 and on February 1, 1983, at 1027 O.G. 9, contains the following comment:

> Comment: Two comments were received which proposed that only a certificate of mailing procedure as in § 1.8(a) be used for determining the date of deposit under 35 U.S.C. § 21.
>
> Reply: The filing date of an application is considered to be much more critical than the filing dates of papers accepted under § 1.8(a). The application filing date is often critical for determining if a statutory bar exists, whether foreign priority can be claimed and who is the senior party in an interference. Therefore, papers filed for purposes of receiving an application filing date should have some clear indication of the date of receipt by the United States Postal Service. Such a practice would also probably require storing all of the envelopes in the file wrapper for record purposes.

As explained in the final rulemaking, Express Mail service was found to be preferable because "a readily legible mailing date is provided to both the applicant and the Patent and Trademark Office on the 'Express Mail' label."

raison d'être of 37 CFR 1.10.[12] Postal employees are presumed to discharge their duties in a proper manner.[13]

Declarations alone, without corroborating evidence, are normally insufficient to establish a filing date.[14] Petitioner's assertion that the above-identified application was deposited on October 17, 2001, is not corroborated by any evidence outside the office of submitting counsel.[15]

It was the availability of an Express Mail label/receipt dated by a disinterested third party (a USPS employee) which persuaded the Commissioner to adopt the use of Express Mail service as the vehicle to implement the authority granted the Commissioner by 35 U.S.C. 21(a). In adopting the Express Mail procedure, the Commissioner specifically rejected the idea of using self serving statements by the applicant or applicant's agent as a means of establishing the date of deposit of a paper or fee with the USPS.

Thus, only the most extraordinary circumstances would justify reliance on a patent applicant's self serving statement, as opposed to an Express Mail receipt, as the means to establish a date of mailing for the purpose of according a filing date to an application for patent. Extraordinary circumstances include when the date-in entered by an USPS employee is illegible or the employee fails to enter a date-in on the label. In both of these instances, an error by the USPS is evident from the receipt itself.

Another circumstance is when petitioner alleges that the date-in was incorrectly entered. In such a situation, the Office will accept information from the USPS which indicates the date-in is incorrect and will accept evidence from petitioner created within one business day of deposit of the envelope with the USPS. In implementing 35 USC § 21, and determining the breadth of 37 CFR 1.10, the Office chose to require corroboration from outside the party's control except for business records created within one business day of deposit. Declarations or affidavits by the

---

[12] In promulgating 37 CFR 1.10, the Office also considered other types of mail service (*e.g.*, registered mail and certified mail), but chose the "Express Mail" service since this service provides, *inter alia*, a legible mailing date on the "Express Mail" label for the records of both the applicant and the Office. See "Revision of Patent Procedure," 48 *Fed. Reg.* at 2697, 1027 *Off. Gaz. Pat. Office* 12-13.

[13] Charlson Realty Co. v. United States, 690 F.2d 434, 442 (Ct. Cl. 1967).

[14] *Federal Register* at 48 *Fed. Reg.* 2696 (January 20, 1983), and in the Patent and Trademark Office *Official Gazette* at 1027 *Off. Gaz. Pat. Office* 9 (February 1, 1983) (" Comment: One person commented that he found the idea of using a declaration or affidavit to establish a date of deposit unacceptable because it exposes the integrity of the assignment of filing dates to the risk of deception. Reply: The use of declarations or affidavits is usually intended to help explain activities which can be supported by exhibits. For example, if the Office copy of the mailing label was not entirely readable, applicant's copy of the "Express Mail" mailing label could accompany a declaration and serve as the basis for granting a filing date.")

Honigsbaum v. Lehman, 903 F. Supp. 8, 37 USPQ2d 1799 (D.D.C. 1995) ("Plaintiff thereafter submitted three affidavits, a declaration, and copies of two pages of records from his attorney's law firm, but the Commissioner finally denied plaintiff's petition for a filing date on the grounds that, if plaintiff had used Express Mail properly, he would have had an Express Mail receipt showing the actual date of mailing; and that the materials later submitted by the plaintiff were not good enough proof.

The materials plaintiff gathered together included a photocopy copy of an Express Mail label that is undated and bears no evidence of any U.S. Postal Service handling. Nothing submitted by plaintiff to the Patent and Trademark Office is corroborated by anything outside the office of the submitting counsel. It was the view of the Commissioner of Patent and Trademarks that these circumstances did not establish the extraordinary conditions that might warrant a waiver.

The decision was for the Commissioner to make, and I cannot find on the basis of the record presented to me that the Commissioner's decision was arbitrary, capricious, an abuse of discretion, or otherwise not in accordance with law.") , aff'd without opinion, 95 F.3d 1166 (Fed. Cir.1996).

[15] See Honigsbaum v. Lehman, 903 F.Supp. 8, 10 (D.D.C. 1995);

individuals who prepared the application for filing and deposited the application in Express Mail service have been accepted to show the actual date of mailing, if properly supported by exhibits.

Conclusion:

Congress, through 35 USC 21, chose to allow the Commissioner, at his discretion, to create rules which would allow the filing date to be the date of deposit with the USPS, rather than the date of receipt by the Patent and Trademark Office. The Commissioner had the responsibility of deciding exactly what group of applications would be accorded a filing date as of the date of receipt by the Office and which group would be given a filing date as of the date of deposit with the USPS. The Commissioner chose to allow the second group to only be comprised of applications mailed in compliance with 37 CFR 1.10. The purpose of 37 CFR 1.183 is to deal with extraordinary circumstances where justice requires waiver of a rule, not to expand the size of the second group by circumventing 37 CFR 1.10. Petitioner has failed to establish that this is an extraordinary situation where justice requires waiver of the rule.

Further correspondence with respect to this matter should be addressed as follows:

By mail: Commissioner for Patents
Box DAC
Washington, D.C. 20231

By facsimile: (703) 308-6916
Attn: Office of Petitions

By hand: Office of Petitions
2201 South Clark Place
Crystal Plaza 4, Suite 3C23
Arlington, VA 22202

Telephone inquiries should be directed to Petitions Attorney Steven Brantley at (703) 306-5683.

Charles Steven Brantley
Petitions Attorney
Office of Petitions
Office of the Deputy Commissioner
for Patent Examination Policy

Beverly M. Flanagan
Supervisory Petitions Examiner
Office of Petitions
Office of the Deputy Commissioner
for Patent Examination Policy

UNITED STATES PATENT AND TRADEMARK OFFICE

COMMISSIONER FOR PATENTS
UNITED STATES PATENT AND TRADEMARK OFFICE
WASHINGTON, D.C. 20231
www.uspto.gov

Paper No. 6

Reese Taylor, Esq.
Renner, Kenner, Greive, Bobak, Taylor & Weber
First National Tower, Fourth Floor
Akron, OH 44308-1456

COPY MAILED

OCT 2 4 2002

OFFICE OF PETITIONS

ON PETITION

In re Application of :
Yeager :
Application No. 29/152,784 :
Filed: January 2, 2002 :
Attorney Docket No. 01200 :

This is a decision on the petition under 37 CFR 1.6(e) filed September 4, 2002. This is also a decision on the renewed petition under 37 CFR 1.183.

The petition under 37 CFR 1.6(e) is **dismissed**.

The petition under 37 CFR 1.183 is **dismissed**.

Any request for reconsideration must be submitted within TWO (2) MONTHS from the mail date of this decision. Extensions of time under 37 CFR 1.136(a) are NOT permitted. This is **not** a final agency action within the meaning of 5 U.S.C. § 704.

The petition under 37 CFR 1.6(e):

37 CFR 1.6(e) states that,

> If interruptions or emergencies in the United States Postal Service which have been so designated by the Commissioner occur, the Patent and Trademark Office will consider as filed on a particular date in the Office any correspondence which is:
> (1) Promptly filed after the ending of the designated interruption or emergency; and
> (2) Accompanied by a statement indicating that such correspondence would have been filed on that particular date if it were not for the designated interruption or emergency in the United States Postal Service.

As to (1), the application was not filed promptly after the ending of the postal service interruption. On November 16, 2001,[1] an interruption within the meaning of 37 CFR 1.6 began. Petitioner asserts that the interruption began October 21, 2001. However, the beginning date is not as important as the ending date. The interruption ended by December 5, 2001. Petitioner has not shown that an interruption "designated" by the Commissioner continued past December 5, 2001. The application was filed January 2, 2002, which is not promptly after the end of the interruption.

[1] On Friday, November 16, 2001, the Chief Operating Officer and Executive Vice President of the United States Postal Service (USPS) issued a memorandum temporarily and immediately suspending Express Mail service to Washington, D.C., ZIP Codes 202xx through 205xx (e.g., 20231). The USPTO designated this interruption in the Express Mail service of the USPS as a postal service interruption within the meaning of 35 U.S.C. 21(a) and 37 CFR 1.6(e).

As to (2), a statement has not been provided specifying a particular date the application would have been filed but for the emergency. Petitioner states the application would have been received earlier but does not provide a specific date it would have been received.

MPEP 511 states,

> 37 CFR 1.6(e) provides a procedure under which correspondence (papers and fees) which could not be filed on a particular date because of an interruption or emergency in the United States Postal Service which is so designated by the Commissioner, may be promptly filed after the ending of such a designated interruption or emergency and be considered as having been filed on that particular date. Authority for such a practice is found in 35 U.S.C. 21(a), as amended by Public Law 97-247.

37 CFR 1.6(e) provides for papers "which could not" be filed on a particular date due to a postal emergency. However, the instant application could have been filed on October 17, 2001, by simply complying with 37 CFR 1.10.

Petitioner has not proven that the application is entitled to a particular filing date under 37 CFR 1.6(e).

A petition fee is unnecessary for a petition under 37 CFR 1.6(e). The petition fee of $130 will be credited to petitioner's deposit account.

The petition under 37 CFR 1.183:

Petitioner has not proven the application was mailed on October 17, 2001.

The suggestion that 37 CFR 1.8 be applicable to application papers deposited with the U.S. Postal Service for purposes of obtaining a filing date was considered *and expressly rejected.*[2] 37 CFR 1.8 provides a procedure by which the timely filing of papers and fees deposited with the U.S. Postal Service may be established *without independent corroboration by an employee of the U.S. Postal Service.* The criticality of an application filing date was considered adequate to justify independent verification by an employee of the U.S. Postal Service of the date of deposit of the application papers with the U.S. Postal Service.[3] Put simply, the insertion by a

---

[2] Public Law 97-247, 96 Stat. 317 (1982), amended 35 U.S.C. § 21 to permit, but not require, the Office to prescribe that any paper or fee required to be filed in the Office be considered filed in the Office on the date on which it was deposited with the U.S. Postal Service. While 35 U.S.C. 21 grants the Director the authority to consider any paper or fee filed in the USPTO on the date the paper or fee was deposited with the USPS, the Director has specifically refused to exercise that authority in favor of mail other than Express Mail. The final rulemaking published on January 20, 1983, at 48 FR 2696-2714 and on February 1, 1983, at 1027 O.G. 9, contains the following comment:

> Comment: Two comments were received which proposed that only a certificate of mailing procedure as in § 1.8(a) be used for determining the date of deposit under 35 U.S.C. § 21.
>
> Reply: The filing date of an application is considered to be much more critical than the filing dates of papers accepted under § 1.8(a). The application filing date is often critical for determining if a statutory bar exists, whether foreign priority can be claimed and who is the senior party in an interference. Therefore, papers filed for purposes of receiving an application filing date should have some clear indication of the date of receipt by the United States Postal Service. Such a practice would also probably require storing all of the envelopes in the file wrapper for record purposes.

As explained in the final rulemaking, Express Mail service was found to be preferable because "a readily legible mailing date is provided to both the applicant and the Patent and Trademark Office on the 'Express Mail' label."

[3] Postal employees are presumed to discharge their duties in a proper manner. Charlson Realty Co. v. United States, 690 F.2d 434, 442 (Ct. Cl. 1967).

disinterested employee of the U.S. Postal Service of the date of deposit in the U.S. Postal Service by Express Mail on the Express Mail label of the envelope containing application papers is the *raison d'être* of 37 CFR 1.10.

Declarations alone, without corroborating evidence, are normally insufficient to establish a filing date.[4] Petitioner's assertion that the above-identified application was deposited on October 17, 2001, is not corroborated by any evidence outside the office of submitting counsel.[5]

It was the availability of an Express Mail label/receipt dated by a disinterested third party (a USPS employee) which persuaded the Commissioner to adopt the use of Express Mail service as the vehicle to implement the authority granted the Commissioner by 35 U.S.C. 21(a). In adopting the Express Mail procedure, the Commissioner specifically rejected the idea of using self serving statements by the applicant or applicant's agent as a means of establishing the date of deposit of a paper or fee with the USPS.

Thus, only the most extraordinary circumstances will justify reliance on a patent applicant's self serving statement, as opposed to an Express Mail receipt, as the means to establish a date of mailing for the purpose of according a filing date to an application for patent. Extraordinary circumstances include when the date-in entered by an USPS employee is illegible or the employee fails to enter a date-in on the label. In both of these instances, an error by the USPS is evident from the receipt itself.

In implementing 35 USC § 21, and determining the breadth of 37 CFR 1.10, the Office chose to require corroboration from outside the party's control.

<u>The Notices cited by petitioner did not indicate an intent by the Commissioner to waive the requirements of 37 CFR 1.10.</u>

As stated in the previous decision, the Office issued a Notice which clearly stated that applications mailed under 37 CFR 1.8 will be given a filing date as of the date of receipt. The Notice stated (emphasis added),

> Except as provided in 37 CFR 1.8 and 1.10, mail sent through the USPS will be given the date it is received by the USPTO as its receipt date. . . . If a party files

---

[4] *Federal Register* at 48 *Fed. Reg.* 2696 (January 20, 1983), and in the Patent and Trademark Office *Official Gazette* at 1027 *Off. Gaz. Pat. Office* 9 (February 1, 1983) (" Comment: One person commented that he found the idea of using a declaration or affidavit to establish a date of deposit unacceptable because it exposes the integrity of the assignment of filing dates to the risk of deception. Reply: The use of declarations or affidavits is usually intended to help explain activities which can be supported by exhibits. For example, if the Office copy of the mailing label was not entirely readable, applicant's copy of the "Express Mail" mailing label could accompany a declaration and serve as the basis for granting a filing date.")

<u>Honigsbaum v. Lehman</u>, 903 F. Supp. 8, 37 USPQ2d 1799 (D.D.C. 1995) ("Plaintiff thereafter submitted three affidavits, a declaration, and copies of two pages of records from his attorney's law firm, but the Commissioner finally denied plaintiff's petition for a filing date on the grounds that, if plaintiff had used Express Mail properly, he would have had an Express Mail receipt showing the actual date of mailing; and that the materials later submitted by the plaintiff were not good enough proof.

The materials plaintiff gathered together included a photocopy copy of an Express Mail label that is undated and bears no evidence of any U.S. Postal Service handling. Nothing submitted by plaintiff to the Patent and Trademark Office is corroborated by anything outside the office of the submitting counsel. It was the view of the Commissioner of Patent and Trademarks that these circumstances did not establish the extraordinary conditions that might warrant a waiver.

The decision was for the Commissioner to make, and I cannot find on the basis of the record presented to me that the Commissioner's decision was arbitrary, capricious, an abuse of discretion, or otherwise not in accordance with law."), <u>aff'd without opinion</u>, 95 F.3d 1166 (Fed. Cir.1996).

[5] <u>See</u> <u>Honigsbaum v. Lehman</u>, 903 F.Supp. 8, 10 (D.D.C. 1995);

> correspondence in accordance with the provisions of 37 CFR 1.8 or 1.10, that correspondence will be considered timely under 37 CFR 1.8 (in situations in which 37 CFR 1.8 is applicable) or filed in the USPTO on the "date-in" indicated on the Express Mail mailing label (in situations in which 37 CFR 1.10 is applicable, such as the filing of new patent or trademark applications), regardless of any USPS delay in ultimately delivering the correspondence to the USPTO and any consequent delay by the USPTO in treating the correspondence (e.g., issuing a Filing Receipt for new applications). . . .
>
> As authorized by 35 U.S.C. § 21(a), 37 CFR 1.10 permits the USPTO to treat correspondence delivered by the "Express Mail Post Office to Addressee" service of the USPS as being filed in the USPTO on the date of deposit with the USPS as shown by the "date in" on the "Express Mail" mailing label. **Use of this procedure can, therefore, obviate risks of delay in postal delivery.** . . .
>
> 37 CFR 1.8 permits applicants to certify that papers were mailed to the USPTO by first class mail on a particular date. The certificate of mailing procedure does **not** apply to filing of U.S. national and international patent applications. . . .

Petitioner has failed to establish that the instant situation is an extraordinary situation where justice requires waiver of the rules.

In order for a petition under 37 CFR 1.183 to be granted, petitioner must demonstrate the existence of an extraordinary situation where justice requires waiver of one or more federal regulations. It is the responsibility of the Commissioner to determine the definitions of the terms "extraordinary" and "as justice requires" as the terms are used in 37 CFR 1.183.[6] The Commissioner drafted the federal regulations which may be waived including 37 CFR 1.183. The Commissioner is the party responsible for determining when a party has demonstrated that an "extraordinary" situation exists such that "justice requires" waiver of a federal regulation.

In determining when waiver is appropriate, the Office *may* consider the circumstances when courts have exercised their equitable powers to waive requirements of a statute or regulation on behalf of a party. Courts are permitted to waive certain statutory requirements such as statutory time limits.[7] Courts, in determining when waiver is proper, have required due diligence and have required more than a "garden variety claim of excusable neglect."[8] The Federal Circuit has stated, "Equitable powers . . . should not be invoked to excuse the performance of a condition by a party that has not acted with reasonable due care and diligence."[9] Factors which may not justify

---

[6] See Bowles, Price Administrator v. Seminole Rock & Sand Co., 325 U.S. 410, 413-414, 89 L. Ed. 1700, 1702, 65 S. Ct. 1215, 1217 (1945) ("Since this involves the interpretation of an administrative regulation a court must necessarily look to the administrative construction of the regulation if the meaning of the words used is in doubt. . . . [T]he ultimate criterion is the administrative interpretation, which becomes of controlling weight unless it is plainly erroneous or inconsistent with the regulation.")

[7] See Wood-Ivey Sys. Corp. v United States, 4 F.3d 961, 964 (Fed. Cir. 1993) (Plager, J., concurring) ("Since Irwin [v. Department of Veterans Affairs, 498 U.S. 89, 112 L. Ed. 2d 435, 111 S. Ct. 453, (1990)], compliance with statutory time limits is no longer jurisdictional, in the old sense that when a Congressionally specified time limit had expired a court had no power to entertain the case. The presumption is now to the contrary. The court has jurisdiction to entertain the suit and to determine on the merits if equitable relief from the time bar is warranted.")

[8] See Wiggins v. State Farm Fire and Casualty Co., 153 F. Supp. 2d 16, 21 (D. D.C. 2001) ("A court can equitably toll the statute of limitations . . . plaintiff will not be allowed extra time to file unless he has exercised due diligence, and the plaintiff's excuse must be more than a 'garden variety claim of excusable neglect.'") (citations omitted).

[9] U.S. v. Lockheed Petroleum Services, 709 F.2d 1472, 1475 (Fed. Cir. 1983) (citations omitted) ("Lockheed had several means at its disposal which it could have employed to guarantee compliance with the regulation, yet it neglected to use any of them. Equitable powers . . . should not be invoked to excuse the performance of a condition by a party that has not acted

tolling include: pro se status, illiteracy, deafness, lack of legal training, lack of knowledge of the law, lack of knowledge of a legal process, and lack of legal representation.[10] An attorney's lack of knowledge, misinterpretation of a law, miscalculation of a time period, and failure to exercise due care and diligence will not justify waiver.[11]

A party's inadvertent failure to comply with the requirements of a rule, such as 37 CFR 1.10, is simply not an extraordinary situation that would warrant waiver of a rule under 37 CFR 1.183.[12]

Petitioner has failed to establish that petitioner exercised due care and diligence. A reasonable person acting with due care and diligence would have filed the application in compliance with 37 CFR 1.10 to ensure its timely filing in the PTO, as well as preserve adequate evidence of such filing.[13] Petitioner failed to file the application in compliance with 37 CFR 1.10.

---

with reasonable due care and diligence."); See also: Grymes v. Sanders et al., 93 U.S. 55, 61; 23 L. Ed. 798, 801 (1876) ("Mistake, to be available in equity, must not have arisen from negligence. . . . The party complaining must have exercised at least the degree of diligence 'which may be fairly expected from a reasonable person.') (citing Kerr on Fraud and Mistake, 407); Garcia v. Office of Personnel Management, 2001 U.S. App. LEXIS 21616, 6 (Fed. Cir. 2001) ("Equity will not intervene, however, to protect a claimant from his or her own failure to exercise due diligence in preserving their legal rights.") (citing Irwin v. Department of Veterans Affairs, 498 U.S. 89, 95 (1990)); Goetz & Goetz v. Secretary of Health and Human Services, 2001 U.S. App. LEXIS 943, 5 (Fed. Cir. 2001) ("the special master's finding of a lack of due diligence was not arbitrary, capricious, or an abuse of discretion, and precludes the application of equitable tolling.") (citing Baldwin County Welcome Ctr. V. Brown, 466 U.S. 147, 151, 80 L. Ed. 2d 196, 104 S. Ct. 1723 (1984) which states, "One who fails to act diligently cannot invoke equitable principles to excuse their lack of diligence.")

[10] See Felder v. Johnson, 204 F.3d 168 171-172 (5th Cir. 2000) ("Mere ignorance of the law or lack of knowledge of filing deadlines does not justify equitable tolling or other exceptions to a law's requirements.") (citing United States v. Flores, 981 F.2d 231, 236 (5th Cir. 1993) as "holding pro se status, illiteracy, deafness, and lack of legal training are not external factors excusing abuse of the writ."; citing Barrow v. New Orleans S.S. Ass'n, 932 F.2d 473, 478 (5th Cir. 1991) as "holding equitable tolling . . . within the Age Discrimination in Employment Act not warranted by plaintiff's unfamiliarity with legal process, his lack of representation, or his ignorance of his legal rights.", (other citations omitted)).

[11] See Harris v. Hutchinson, 209 F.3d 325, 330-331 (4th Cir. 2000) (Plaintiff argues that he relied on "negligent and erroneous advice" of his attorney. Attorney agrees his advice was erroneous. The court holds, "[A] mistake by a party's counsel in interpreting a statute of limitations does not present the extraordinary circumstance beyond the party's control where equity should step in to give the party the benefit of his erroneous understanding.") (citing Taliani v. Chrans, 189 F.3d 597, 598 (7th Cir. 1999) as "holding that a lawyer's miscalculation of a limitations period is not a valid basis for equitable tolling."; citing Sandvik v. United States, 177 F.3d 1269, 1272 (11th Cir. 1999) (per curiam) as "refusing to toll the limitations period where the prisoner's delay was assertedly the result of a lawyer's decision to mail the petition by ordinary mail rather than to use some form of expedited delivery."; citing Gilbert v. Secretary of Health and Human Services, 51 F.3d 254, 257 (Fed. Cir. 1995) as "holding that a lawyer's mistake is not a valid basis for equitable tolling."; other citations omitted.)

[12] See Honigsbaum v. Lehman, 903 F. Supp. 8, 37 USPQ2d 1799 (D.D.C. 1995) (Commissioner did not abuse his discretion in refusing to waive requirements of 37 CFR 1.10(c) in order to grant filing date to patent application, where applicant failed to produce Express Mail customer receipt or any other evidence that application was actually deposited with USPS as Express Mail), aff'd without opinion, 95 F.3d 1166 (Fed. Cir.1996); Nitto Chemical Industry Co., Ltd. v. Comer, 39 USPQ2d 1778, 1782 (D.D.C. 1994) (Commissioner's refusal to waive requirements of 37 CFR 1.10 in order to grant priority filing date to patent application not arbitrary and capricious, because failure to comply with the requirements of 37 CFR 1.10 is an "avoidable" oversight that could have been prevented by the exercise of ordinary care or diligence, and thus not an extraordinary situation under 37 CFR 1.183); Vincent v. Mossinghoff, 230 USPQ 621 (D.D.C. 1985) (Misunderstanding of 37 CFR 1.8 not unavoidable delay in responding to Office Action); Gustafson v. Strange, 227 USPQ 174 (Comm'r Pats. 1985) (Counsel's unawareness of 37 CFR 1.8 not extraordinary situation warranting waiver of a rule); In re Chicago Historical Antique Automobile Museum, Inc., 197 USPQ 289 (Comm'r Pats. 1978) (Since certificate of mailing procedure under 37 CFR 1.8 was available to petitioner, lateness due to mail delay not deemed to be extraordinary situation).

[13] "The procedures set out in the PTO's regulations are designed to provide the type of direct evidence needed to prove when and to where a lost amendment [or other paper] was sent. Had plaintiff's counsel followed these procedures, as a 'prudent and careful man' would have done in conducting 'his most important business,' then he would have been able to provide

Petitioner seeks to use events which occurred after October 17, 2001, to justify actions taken on October 17, 2001. However, petitioner must prove that, on October 17, 2001, petitioner treated the application the same as a reasonable and prudent person would treat his or her most important business. Each time an application is mailed, the risk exists that the package will be delayed or completely lost. The possibility of delay or loss of mail has existed as long as the United States Postal Service has existed. The entire reason for the creation of 37 CFR 1.10(e) was the fact that applications are occasionally lost. A reasonable and prudent person treating the application as his most important business would have taken advantage of the safeguards of 37 CFR 1.10.

An applicant may delay action until the end of the time period for reply. In doing so, however, the applicant must assume the risk attendant to such delay. Petitioner was aware the application needed a filing date of October 24, 2001, but waited until October 17, 2001, to mail the application. Petitioner risked the application taking more than a week to reach the Office. A reasonable and prudent person would not have voluntarily assumed the risk of delay or loss by the USPS but would have mailed the application in compliance with 37 CFR 1.10.

Petitioner chose not to take advantage of the provisions of 37 CFR 1.10 and to assume the risk of loss or delay. Petitioner is bound by the consequences of such a choice.

Petitioner has failed to establish that justice requires waiver of the rule. Petitioner has not demonstrated that the application will be denied patentability due to the later filing date. The fact that it *might* be denied patentability is insufficient.[14] Petitioner has not shown that the assignment of the January 2, 2002 filing date to the instant application has resulted in any actual harm to petitioner. If the patentability of the application is not affected by the assignment of a later filing date, then justice does not require waiver of the rule. Petitioner argues against the preceding sentences but has failed to establish why the reasoning of Nitto Chemical Industry Co., Ltd. v. Comer, 39 USPQ2d 1778, 1782 (D.D.C. 1994) does not apply to this case as well.

Petitioner failed to take steps, such as mailing the application in compliance with 37 CFR 1.10, to obviate the risk of postal delay. The petition lacks a showing that this is an extraordinary situation in which "justice requires" suspension of the rules, and the petition under 37 CFR 1.183 is subject to dismissal.

Petitioner has not proven that the "interruption" was a but-for cause of the delay.

Petitioner has not proven that, but for the "interruption," the application would have been received on October 24, 2001. It is entirely possible that the application would have arrived at the Office later than this date even if the "interruption" had not occurred.

Conclusion:

Congress, through 35 USC 21, chose to allow the Commissioner, at his discretion, to create rules which would allow the filing date to be the date of deposit with the USPS, rather than the date of receipt by the Patent and Trademark Office. The Commissioner had the responsibility of deciding exactly what group of applications would be accorded a filing date as of the date of

---

sufficient evidence to support a showing of unavoidable delay." Krahn v. Commissioner of Patents and Trademarks, 15 U.S.P.Q.2d (BNA) 1823 (E.D. Va. 1990).

[14] See Nitto Chemical Industry Co., Ltd. v. Comer, 39 USPQ2d 1778, 1782 (D.D.C. 1994) ("As a final matter, Nitto suggests that its patent applications have been prejudiced by the Commissioner's failure to give the applications a filing date of February 28, 1991. Opp. at 9. The Commissioner has acknowledged that, without the benefit of the foreign patent filing date of February 28, 1990, the patentability of Nitto's inventions could be adversely affected. Motion at 4. However, Nitto did not submit evidence showing that the inventions claimed in the two applications have been, or will be, denied patentability over applications filed between February 28, 1990, and May 2, 1991. Reply at 3-4. Thus, the Commissioner had no basis on which to determine whether "justice required" him to award Nitto's applications the earlier filing date.")

receipt by the Office and which group would be given a filing date as of the date of deposit with the USPS. The Commissioner chose to allow the second group to only be comprised of applications mailed in compliance with 37 CFR 1.10. The purpose of 37 CFR 1.183 is to deal with extraordinary circumstances where justice requires waiver of a rule, not to expand the size of the second group by circumventing 37 CFR 1.10. Petitioner has failed to establish that this is an extraordinary situation where justice requires waiver of the rule.

Further correspondence with respect to this matter should be addressed as follows:

By mail:	Commissioner for Patents Box DAC Washington, D.C. 20231
By facsimile:	(703) 308-6916 Attn: Office of Petitions
By hand:	Office of Petitions 2201 South Clark Place Crystal Plaza 4, Suite 3C23 Arlington, VA 22202

Telephone inquiries should be directed to Petitions Attorney Steven Brantley at (703) 306-5683.

Charles Steven Brantley
Petitions Attorney
Office of Petitions
Office of the Deputy Commissioner
for Patent Examination Policy

UNITED STATES PATENT AND TRADEMARK OFFICE

Commissioner for Patents
United States Patent and Trademark Office
P.O. Box 1450
Alexandria, VA 22313-1450
www.uspto.gov

Reese Taylor, Esq.
Renner, Kenner, Grieve, Bobak,
Taylor & Weber
First National Tower, Fourth Floor
Akron, OH 44308-1456

COPY MAILED

SEP 30 2004

OFFICE OF PETITIONS

In re Patent No. D,495,398	:	
Issue Date: August 31, 2004	:	
Application No. 29/152,784	:	NOTICE
Filed: January 2, 2002	:	
Attorney Docket No. 01200	:	

This is a notice regarding your request for acceptance of a fee deficiency submission under 37 CFR 1.28. On September 1, 1998, the Court of Appeals for the Federal Circuit held that 37 CFR 1.28(c) is the sole provision governing the time for correction of the erroneous payment of the issue fee as a small entity. **See DH Technology v. Synergystex International, Inc. 154 F.3d 1333, 47 USPQ2d 1865 (Fed. Cir. Sept. 1, 1998).**

The Office no longer investigates or rejects original or reissue applications under 37 CFR 1.56. **1098 Off. Gaz. Pat. Office 502 (January 3, 1989)**. Therefore, nothing in this Notice is intended to imply that an investigation was done.

Your fee deficiency submission under 37 CFR 1.28 is hereby **ACCEPTED**.

This file is being referred to the Office of Publications for further processing.

Inquiries related to this communication should be directed to the undersigned at (703) 308-6711.

Andrea Smith
Petitions Examiner
Office of Petitions
Office of the Deputy Commissioner
for Patent Examination Policy

UNITED STATES PATENT AND TRADEMARK OFFICE

COMMISSIONER FOR PATENTS
UNITED STATES PATENT AND TRADEMARK OFFICE
WASHINGTON, D.C. 20231
www.uspto.gov

Paper No. 5

JOHN C. SMITH, ESQ.
4800 NORTH FEDERAL HIGHWAY
SUITE A-207
BOCA RATON FL 33431

COPY MAILED

NOV 0 5 2002

OFFICE OF PETITIONS

In re Application of
Ghim
Application No. 29/152,913
Filed: June 11, 2002
Attorney Docket No. P01046802
For: Eyeglass Clip

DECISION ON PETITION

This is a decision on the petition under 37 CFR 1.182, filed June 12, 2002, to change the name of the sole inventor.

The petition is **DISMISSED**.

Any reconsideration petition must be filed within 2 months of the mail date of this decision. Extensions of time are not permitted. 37 CFR 1.181(f).

Petitioner appears to be stating that Bum Joon Kim is the inventor's legal name. If this is the case, the Office requires documentary evidence that Bum Joon Kim is the inventor's legal name.

If, however, the inventor's legal name was changed from Vincent J. Ghim to Bum Joon Kim, the Office requires either (1) a declaration signed with both names with an explanation of how the name change was effected or (2) a certified copy of a court order for the name change.

Further correspondence with respect to this matter should be addressed as follows:

By mail: Commissioner for Patents
Box DAC
Washington, D.C. 20231

By facsimile: (703) 308-6916
Attn: Office of Petitions

By hand: Office of Petitions
2201 South Clark Place
Crystal Plaza 4, Suite 3C23
Arlington, VA 22202

Telephone inquiries should be directed to the undersigned at (703) 308-6712.

E. Shirene Willis

E. Shirene Willis
Petitions Attorney
Office of Petitions
Office of the Deputy Commissioner
for Patent Examination Policy

SPE RESPONSE FOR CERTIFICATE OF CORRECTION

Paper No.:7/23/2005

DATE : July 23, 2005

TO SPE OF : ART UNIT 2913

SUBJECT : Request for Certificate of Correction on Patent No.: D488438

A response is requested with respect to the accompanying request for a certificate of correction.

Please complete this form and return with file, within **7** days to:
Certificates of Correction Branch - PK 3-910
Palm location **7590** - Tel. No. 305-8201

With respect to the change(s) requested, correcting Office and/or Applicant's errors, should the patent read as shown in the certificate of correction? No new matter should be introduced, nor should the scope or meaning of the claims be changed.

Thank You For Your Assistance **Certificates of Correction Branch**

The request for issuing the above-identified correction(s) is hereby:
Note your decision on the appropriate box.

☒ **Approved** **All** changes apply.

☐ **Approved in Part** Specify below which changes **do not** apply.

☐ **Denied** State the reasons for denial below.

Comments:

SPE: Joel Sincavage **Art Unit** 2913

UNITED STATES PATENT AND TRADEMARK OFFICE

COMMISSIONER FOR PATENTS
UNITED STATES PATENT AND TRADEMARK OFFICE
WASHINGTON, D.C. 20231
www.uspto.gov

Paper No. 5

CALFEE HALTER & GRISWOLD, LLP
800 SUPERIOR AVENUE
SUITE 1400
CLEVELAND OH 44114

COPY MAILED

MAR 19 2003

OFFICE OF PETITIONS

In re Application of :
Jones, Fillip and Gary :
Application No. 29/153,975 : DECISION GRANTING PETITION
Filed: January 15, 2002 : AND ACCORDING STATUS
Attorney Docket No. 1942704114 : UNDER 37 CFR 1.47(b)
For: Decorative Light Support Clip :

This is in response to the petition under 37 CFR 1.47(b), filed August 19, 2002. Petitioner obtained a five-month extension of time to file a reply. Accordingly, the petition was timely filed. The application file was recently forwarded to the Office of Petitions for a decision on the petition. The Office apologizes for any inconvenience.

The petition is **granted**.

Petitioner has shown that the non-signing inventors have refused to join in the filing of the above-identified application after having been presented with the application papers. Specifically, the Statement of Facts of Diane H. Dobrea establishes that the inventors were mailed the application papers, including the specification, claims and drawings, but failed to respond to the requests that they sign the declaration. In addition, petitioner has shown that Emerald Innovations, LLC has a proprietary interest in the above-identified application with the Bill of Sale and Order in Bankruptcy. The petition fee has been paid. Lastly, petitioner has submitted a declaration in compliance with 37 CFR 1.63 and 1.64 and demonstrated that such action is necessary to prevent irreparable damage.

This application and papers have been reviewed and found in compliance with 37 CFR 1.47(b). This application is hereby accorded Rule 1.47(b) status. As provided in Rule 1.47(c), this Office will forward notice of this application's filing to the non-signing inventors at the addresses given in the Declaration. Notice of the filing of this application will also be published in the Official Gazette.

The above-identified application will be forwarded to Technology Center 2900 for examination in due course.

Telephone inquiries should be directed to the undersigned at (703) 306-5589.

Christina Tartera Donnell

Christina Tartera Donnell
Senior Petitions Attorney
Office of Petitions

UNITED STATES PATENT AND TRADEMARK OFFICE

COMMISSIONER FOR PATENTS
UNITED STATES PATENT AND TRADEMARK OFFICE
WASHINGTON, D.C. 20231
www.uspto.gov

Paper No. 4

Alan D. Kamrath, Esq.
Rider, Bennett, Egan & Arundel, LLP
Suite 2000
333 South Seventh Street
Minneapolis, MN 55402

COPY MAILED

JUL 0 2 2002

OFFICE OF PETITIONS

In re Application of Henry Application No. 29/153,987 Filed: October 23, 2001 Attorney Docket No.:TGP/jma/D04704/US	:	ON PETITION

This is a decision on the petition filed April 8, 2002 in response to the Notice of Incomplete Nonprovisional Application ("Notice") mailed April 2, 2002.

The Notice stated that the application had not been accorded a filing date because the application was deposited without a specification or a claim as prescribed by 35 USC 112. The Notice indicates the filing date of the application will be the date of receipt of the omitted items. The Notice indicates that any assertion that the omitted items were submitted requires applicant to submit a petition along with accompanying petition fee[1].

Petitioner argues that the application as filed included a one (1) page specification as indicated on the return receipt postcard date stamped by the Office acknowledging receipt of the specification. Petitioner has included a copy of the postcard along with a copy of the specification which includes one (1) claim.

The original specification submitted with the application papers has not been located. However, in view of the evidence presented, the petition to include the specification in the application as originally filed is **GRANTED**.

No fee is due in connection with this matter. The previously submitted $130.00 petition fee has been refunded to deposit account No. 50-1188 as authorized in the instant petition.

Since the original specification cannot be located in the Office, the copy supplied with the instant petition will be used for examination purposes.

This application will be forwarded to Office of Initial Patent Examination for further processing with a filing date of October 23, 2001 and to await receipt of the executed oath or declaration and surcharge.

---

[1]The Notice also requires applicant to submit an executed oath or declaration and surcharge. To date, such as not been submitted. Petitioner is advised that extensions of time are currently available for submission of the oath or declaration and surcharge pursuant to 37 CFR 1.136(a).

Telephone inquiries related to this decision may be directed to Petitions Attorney Alesia M. Brown at (703) 305-0310.

Beverly M. Flanagan
Supervisory Petitions Examiner
Office of Petitions
Office of the Deputy Commissioner
for Patent Examination Policy

UNITED STATES PATENT AND TRADEMARK OFFICE

COMMISSIONER FOR PATENTS
UNITED STATES PATENT AND TRADEMARK OFFICE
P.O. BOX 1450
ALEXANDRIA, VA 22313-1450
www.uspto.gov

JOHN R. HOFFMAN
ATTORNEY AT LAW
P.O. BOX 191
616 W. 13TH STREET
JASPER, IN 47547

5/18/05

In re Application of
Loren J. Veltrop :
Serial No.: 29/154,161 :
Filed: January 18, 2002 : PETITION DECISION
Attorney Docket No.: :

This is a decision on the Petition to Revive Unavoidably Abandoned Application under 37 CFR 1.137(a), filed December 19, 2002, and again on February 22, 2005 to revive the above identified abandoned application based on unavoidable circumstances. The extreme delay in acting upon this petition is regretted.

A review of the file history shows that the examiner mailed an Office action to applicant April 23, 2002, setting a one-month shortened statutory period for response. Upon failure to respond, a Notice of Abandonment was mailed November 27, 2002.

A petition under 37 CFR 1.137(a), as revised December 1, 1997, requires (1) a petition and petition fee of, (2) the proposed response or Issue Fee, (3) a terminal disclaimer and disclaimer fee in any design application, and (4) an adequate showing of the cause of unavoidable delay. The requirement for a terminal disclaimer has been waived, as the petition was filed before the mailing of the Notice of Abandonment.

Applicant's petition is **GRANTED**.

The application will be promptly forwarded to the Examiner for evaluation of applicants' response in due course.

Should there be any questions with respect to this decision, please contact Sandra Morris; by mail addressed to: Director, Technology Center 1700/2900, P.O. Box 1450, Alexandria, VA 22313-1450; or by telephone at (571) 272-2622.

Jacqueline Stone
Director, Technology Center 1700/2900

UNITED STATES PATENT AND TRADEMARK OFFICE

AUG 11 2004

COMMISSIONER FOR PATENTS
UNITED STATES PATENT AND TRADEMARK OFFICE
P.O. BOX 1450
ALEXANDRIA, VA 22313-1450
www.uspto.gov

#10

ALTERA LAW GROUP, LLC
6500 CITY WEST PARKWAY
SUITE 100
MINNEAPOLIS MN 55344-7704

In re Application of
Alexander Benn
Serial No.: 29/154,431
Filed: January 23, 2002
Attorney Docket No.: 725.321US01

: PETITION DECISION

This is in response to applicant's Petition to Withdraw Holding of Abandonment under 37 CFR 1.181 submitted May 26, 2004, based on not having received the Office action.

This petition is **GRANTED.**

This application was held abandoned based on applicant's failure to timely respond to the Office action mailed July 29, 2003, which set a three month shortened statutory period of time to respond. As no response was received by October 29, 2003, a Notice of Abandonment was mailed May 14, 2004. This petition followed.

Applicant has stated that the Office action was never received, and a copy of the docket records and mail log confirms this. The case is now returned to pending status, and the abandonment is thereby withdrawn.

The application will be forwarded to the Examiner for remailing of the Office action in due course.

Should there be any questions with respect to this decision, please contact Sandra Morris; by mail addressed to: Director, Technology Center 3700/2900, P.O. Box 1450, Alexandria, VA 22313-1450; or by telephone at (571) 272-2622.

John Kittle
Director, Technology Center 3700/2900

UNITED STATES PATENT AND TRADEMARK OFFICE

COMMISSIONER FOR PATENTS
UNITED STATES PATENT AND TRADEMARK OFFICE
P.O. BOX 1450
ALEXANDRIA, VA 22313-1450
WWW.USPTO.GOV

Paper No. 4

COPY MAILED

JUN 0 9 2003

OFFICE OF PETITIONS

ON PETITION

Daniel Shea Marchese
6 Ginger Lily Court
Coto de Caza CA 92679

In re Application of
Marchese
Application No. 29/154,577
Filed: January 25, 2002
Attorney Docket No. N/A
For: BLADE AUTOMOTIVE GRILLE

This is a decision on the petition under 37 CFR 1.137(a), filed May 1, 2003, to revive the above-identified application.

The petition under 37 CFR 1.137(a) is **DISMISSED**.

Any further petition to revive the above-identified application must be submitted within TWO (2) MONTHS from the mail date of this decision. Extensions of time under 37 CFR 1.136(a) are permitted. The reconsideration request should include a cover letter entitled "Petition under 37 CFR 1.137." This is **not** final agency action within the meaning of 5 U.S.C. § 704.

This application was filed on January 25, 2002 without the entire statutory basic filing fee. The Office mailed a Notice to File Missing Parts of Nonprovisional Application ("Notice") on February 26, 2002 that set a two month extendable deadline for applicant to submit the balance due for the basic filing fee and a surcharge for its late filing. The Office did not receive a reply. This application became technically abandoned on April 27, 2002. The filing of the instant petition precedes the mailing of a Notice of Abandonment.

A grantable petition under 37 CFR 1.137(a) must be accompanied by: (1) the required reply, unless previously filed; (2) the petition fee as set forth in 37 CFR 1.17(l); (3) a showing to the satisfaction of the Commissioner that the entire delay in filing the required reply from the due date for the reply until the filing of a grantable petition pursuant to 37 CFR 1.137(a) was unavoidable; and (4) any terminal disclaimer (and fee as set forth in 37 CFR 1.20(d)) required pursuant to 37 CFR 1.137(c). The instant petition lacks item (3) and (4).

Regarding (3), petitioner has not shown to the satisfaction of the Commissioner that the entire delay from the due date of the reply to the filing of a grantable petition was unavoidable.

Decisions on reviving abandoned applications on the basis of "unavoidable" delay have adopted the reasonably prudent person standard in determining if the delay was unavoidable:

> The word 'unavoidable' . . . is applicable to ordinary human affairs, and requires no more or greater care or diligence than is generally used and observed by prudent and careful men in relation to their most important business. It permits them in the exercise of this care to rely upon the ordinary and trustworthy agencies of mail and telegraph, worthy and reliable employees, and such other means and instrumentalities as are usually employed in such important business. If unexpectedly, or through the unforeseen fault or imperfection of these agencies and instrumentalities, there occurs a failure, it may properly be said to be unavoidable, all other conditions of promptness in its rectification being present.

In re Mattullath, 38 App. D.C. 497, 514-15 (1912)(quoting Ex parte Pratt, 1887 Dec. Comm'r Pat. 31, 32-33 (1887)); see also Winkler v. Ladd, 221 F. Supp. 550, 552, 138 USPQ 666, 167-68 (D.D.C. 1963), aff'd, 143 USPQ 172 (D.C. Cir. 1963); Ex parte Henrich, 1913 Dec. Comm'r Pat. 139, 141 (1913). In addition, decisions on revival are made on a "case-by-case basis, taking all the facts and circumstances into account." Smith v. Mossinghoff, 671 F.2d 533, 538, 213 USPQ 977, 982 (D.C. Cir. 1982). Finally, a petition cannot be granted where a petitioner has failed to meet his or her burden of establishing that the delay was "unavoidable." Haines v. Quigg, 673 F. Supp. 314, 316-17, 5 USPQ2d 1130, 1131-32 (N.D. Ind. 1987).

An adequate showing of diligence is the touchstone of a successful petition to revive under an unavoidable standard. Petitioner claims that he was unable to reply to the Notice because there were problems with the postal service forwarding his mail to him. Applicant has not shown that adequate provisions were made for the careful handling of Office correspondence in order to ensure a timely response. Petitioner is responsible for notifying the Office of changes in correspondence address. Requesting that the United States Postal Office forward mail to a new address does not absolve applicant of the requirement of informing the United States Patent and Trademark Office of a change in correspondence address. Delay in prosecution resulting from the lack of knowledge or improper application of the patent statute, rules of practice or the MPEP is not unavoidable. See, Haines v. Quigg, 673 F. Supp. 314, 317, 5 USPQ2d 1130, 1132 (N.D. Ind. 1987), Vincent v. Mossinghoff, 230 USPQ 621, 624 (D.D.C. 1985); Smith v. Diamond, 209 USPQ 1091 (D.D.C. 1981); Potter v. Dann, 201 USPQ 574 (D.D.C. 1978); Ex parte Murray, 1891 Dec. Comm'r Pat. 130, 131 (1891). A delay caused by the failure on the part of the petitioner to provide the Office with a current correspondence address does not constitute an unavoidable delay. See Ray v. Lehman, 55 F.3d 606, 34 USPQ2d 1786 (Fed. Cir. 1995).

The application file does not indicate a change of address has been filed in this case, although the address given on the petition differs from the address of record. A change of address should be filed in this case in accordance with MPEP 601.03. A courtesy copy of this decision is being mailed to the address noted on the petition. However, until otherwise instructed, all future correspondence regarding this application will be mailed solely to the address of record.

With respect to (4), since the above-identified application is a design application, a terminal disclaimer is required under 37 CFR 1.137(c). Effective September 8, 2000, 37 CFR 1.137(c)(1) has been added to state that a terminal disclaimer filed pursuant to this rule must dedicate to the public a terminal part of the term of any patent granted thereon equivalent to the lesser of: 1) the period of abandonment of the application; or 2) the period extending beyond twenty years from the date on which the application for the patent was filed in the United States, or, if the application contains a specific reference to an earlier filed application(s) under 35 U.S.C. 120, 121 or 365(c), from the date on which the earliest such application was filed. 65 Fed. Reg. 54,674 (2000). Accordingly, the period of the terminal disclaimer filed [date] will be equivalent to the lesser of period (1) or (2), as noted above, for this application.

A terminal disclaimer fee of $ 55.00 is also required. A blank terminal disclaimer form is enclosed for petitioner's convenience.

ALTERNATE VENUE-- PETITION UNDER 37 CFR 1.137(b)

The undersigned recommends that applicant file a petition stating that the delay was unintentional. Public Law 97-247, § 3, 96 Stat. 317 (1982), which revised patent and trademark fees, amended 35 U.S.C. § 41(a)(7) to provide for the revival of an "unintentionally" abandoned application without a showing that the delay in prosecution or in late payment of an issue fee was "unavoidable." This amendment to 35 U.S.C. § 41(a)(7) has been implemented in 37 CFR 1.137(b). An "unintentional" petition under 37 CFR 1.137(b) must be accompanied by the $650.00 petition fee.

The filing of a petition under 37 CFR 1.137(b) cannot be intentionally delayed and therefore must be filed promptly. A person seeking revival due to unintentional delay can not make a statement that the delay was unintentional unless the entire delay, including the delay from the date it was discovered that the application was abandoned until the filing of the petition to revive under 37 CFR 1.137(b), was unintentional. A statement that the delay was unintentional is not appropriate if petitioner intentionally delayed the filing of a petition for revival under 37 CFR 1.137(b). For petitioner's convenience, a blank PTO/SB/64 -- Petition for Revival of an Application for Patent Abandoned Unintentionally under 37 CFR 1.137(b) is enclosed.

Further correspondence with respect to this matter should be addressed as follows:

By mail: Mail Stop PETITION
Commissioner for Patents
Post Office Box 1450
Alexandria, VA 22313-1450

By facsimile: (703) 308-6916
Attn: Office of Petitions

By hand: Office of Petitions
2201 South Clark Place
Crystal Plaza 4, Suite 3C23
Arlington, VA 22202

Telephone inquiries concerning this matter may be directed to the undersigned at (703) 308-6712.

E. Shirene Willis
Senior Petitions Attorney
Office of Petitions

enclosures: blank PTO/SB/63 -- Terminal Disclaimer to Accompany Petition

blank PTO/SB/64 -- Petition for Revival of an Application Abandoned Unintentionally under 37 CFR 1.137(b)

Privacy Act Statement

cc: DANIEL SHEA MARCHESE
23091 ANTONIO PKWY #335
RANCHO SANTA MARGARITA CA 92688

UNITED STATES PATENT AND TRADEMARK OFFICE

COMMISSIONER FOR PATENTS
UNITED STATES PATENT AND TRADEMARK OFFICE
P.O. BOX 1450
ALEXANDRIA, VA 22313-1450
WWW.USPTO.GOV

Paper No. 9
COPY MAILED
SEP 2 6 2003
OFFICE OF PETITIONS

Daniel Shea Marchese
6 Ginger Lily Court
Coto de Caza CA 92679

In re Application of
Marchese
Application No. 29/154,577
Filed: January 25, 2002
Attorney Docket No. N/A
For: BLADE AUTOMOTIVE GRILLE

ON PETITION

This is a decision on the petition under 37 CFR 1.137(b), filed September 3, 2003 (certificate of mailing date July 31, 2003), to revive the above-identified application.

The petition under 37 CFR 1.137(b) is **DISMISSED**.

Any request for reconsideration of this decision should include a cover letter entitled "Reconsideration Petition under 37 CFR 1.137(b)." Petitioner is advised that this is not a final agency decision.

The petition will not be treated because the petition is not signed by either (1) all the named inventors, (2) the owner to the rights of the inventor (the assignee), or (3) a registered attorney or agent duly appointed by the inventors or owners, as is required by 37 CFR 1.33 (b).

The Change of Correspondence Address is not acceptable because it is not signed by either (1) all the named inventors, (2) the owner to the rights of the inventor (the assignee), or (3) a registered attorney or agent duly appointed by the inventors or owners, as is required by 37 CFR 1.33 (b).

The terminal disclaimer is not acceptable because it is not signed by either (1) all the named inventors, (2) the owner to the rights of the inventor (the assignee), or (3) a registered attorney or agent duly appointed by the inventors or owners, as is required by 37 CFR 1.33 (b).
In addition, the first full line of the terminal disclaimer is not proper because there are two inventors and it appears that Jennifer Marchese has not signed over her interest in the invention to Daniel Marchese. Therefore, Daniel Marchese is not 100% owner of the invention, as the first full line of the disclaimer states.

To remedy the situation with respect to the petition and Change of Correspondence Address, applicants have four options. Applicants could resubmit the two documents (1) signed by both inventors or (2) signed by the assignee of the entire interest (if any), or (3) signed by a newly appointed registered representative. Option (4) is the simplest option -- (4) Both inventors could execute a power of attorney listing Daniel Marchese, thereby avoiding re-submission of the

petition and the Change of Correspondence Address.

If petitioners appoint Daniel Marchese, then the power of attorney will be retroactively effective with respect to the September 3, 2003 (certificate of mailing date July 31, 2003) petition and the Change of Correspondence Address. These two submissions will meet signature requirements and will be treated.

If petitioners submit a power of attorney, both inventors must sign it.

Petitioners are reminded that, as stated above, the terminal disclaimer is invalid. To remedy the situation with respect to the terminal disclaimer, a new terminal disclaimer listing both inventors and signed by the appropriate party/ parties is required.

A courtesy copy of this decision will be mailed to the address listed on the petition.

Further correspondence with respect to this matter should be addressed as follows:

By mail: Mail Stop PETITION
Commissioner for Patents
Post Office Box 1450
Alexandria, VA 22313-1450

By facsimile: (703) 308-6916
Attn: Office of Petitions

By hand: Office of Petitions
2201 South Clark Place
Crystal Plaza 4, Suite 3C23
Arlington, VA 22202

Telephone inquiries concerning this matter may be directed to the undersigned at (703) 308-6712.

E. Shirene Willis

E. Shirene Willis
Senior Petitions Attorney
Office of Petitions

cc: DANIEL SHEA MARCHESE
23091 ANTONIO PKWY #335
RANCHO SANTA MARGARITA CA 92688

UNITED STATES PATENT AND TRADEMARK OFFICE

COMMISSIONER FOR PATENTS
UNITED STATES PATENT AND TRADEMARK OFFICE
P.O. BOX 1450
ALEXANDRIA, VA 22313-1450
www.uspto.gov

Paper No. 13

DANIEL SHEA MARCHESE
& JENNIFER LYNN MARCHESE
23091 ANTONIO PKWY #335
RANCHO SANTA MARGARITA CA 92688

COPY MAILED
NOV 1 3 2003
OFFICE OF PETITIONS

In re Application of
Marchese
Application No. 29/154,577
Filed: January 25, 2002
Attorney Docket No. N/A
For: BLADE AUTOMOTIVE GRILLE

ON PETITION

This is a decision on the reconsideration petition under 37 CFR 1.137(b), filed October 29, 2003, to revive the above-identified application.

This application was filed on January 25, 2002 without the entire statutory basic filing fee. The Office mailed a Notice to File Missing Parts of Nonprovisional Application ("Notice") on February 26, 2002 that set a two month extendable deadline for applicant to submit the balance due for the basic filing fee and a surcharge for its late filing. The Office did not receive a reply. This application became abandoned on April 27, 2002. The filing of the instant petition precedes the mailing of a Notice of Abandonment.

Petitioners have submitted the balance due for the basic filing fee, an acceptable statement of the unintentional nature of the delay in responding to the February 26, 2002 Notice, the required petition fee, and an acceptable terminal disclaimer.

The petition under 37 CFR 1.137(b) is **GRANTED**.

After the mailing of this decision, the application file will be returned to the Office of Initial Patent Examination for further processing.

Telephone inquiries concerning this matter may be directed to the undersigned at (703) 308-6712.

E. Shirene Willis

E. Shirene Willis
Senior Petitions Attorney
Office of Petitions

SPE RESPONSE FOR CERTIFICATE OF CORRECTION

Paper No.:10062005

DATE : October 6, 2005

TO SPE OF : ART UNIT 2913

SUBJECT : Request for Certificate of Correction on Patent No.: D494745

A response is requested with respect to the accompanying request for a certificate of correction.

Please complete this form and return with file, within **7** days to:
Certificates of Correction Branch - PK 3-910
Palm location **7590** - Tel. No. 305-8201

With respect to the change(s) requested, correcting Office and/or Applicant's errors, should the patent read as shown in the certificate of correction? No new matter should be introduced, nor should the scope or meaning of the claims be changed.

David Irvine

Thank You For Your Assistance **Certificates of Correction Branch**

The request for issuing the above-identified correction(s) is hereby:
Note your decision on the appropriate box.

☒ **Approved** **All** changes apply.

☐ **Approved in Part** Specify below which changes **do not** apply.

☐ **Denied** State the reasons for denial below.

Comments:

Caron Veynar

SPE: Caron Veynar **Art Unit** 2913

UNITED STATES PATENT AND TRADEMARK OFFICE

JUL 08 2004

Commissioner for Patents
United States Patent and Trademark Office
P.O. Box 1450
Alexandria, VA 22313-1450
www.uspto.go

CHARLES E. BAXLEY
HART, BAXLEY, DANIELS & HOLTON
FIFTH FLOOR
59 JOHN STREET
NEW YORK, NY 10038

#1

In re Application of	:
Hsiu-Ching Huang	:
Serial No.: 29/154,937	: PETITION DECISION
Filed: January 31, 2002	:
Attorney Docket No.: 12810 B	:

This is in response to applicant's Petition to Request Withdraw of Holding of Abandonment submitted September 11, 2003, and again on May 3, 2004, which is being treated as a Petition under 37 CFR 1.181, based on not having received the Office action. The delay in acting upon this petition is regretted; however, the first copy of the petition was not associated with this application.

This petition is **GRANTED.**

This application was held abandoned based on applicant's failure to timely respond to the Notice of Allowance mailed January 10, 2003, which set a three month statutory period of time to respond. As no response was received by April 10, 2003, a Notice of Abandonment was mailed August 9, 2003. This petition followed.

Applicant has stated that the Notice of Allowance was never received, and a copy of the docket records confirms this. Furthermore, it is clear that the Patent Office erred in mailing the Notice of Allowance to the incorrect address; we regret the error. The case is now returned to pending status, and the abandonment is thereby withdrawn.

The application will be promptly forwarded to the Examiner for prompt remailing of the Notice of Allowance and Issue Fee Due.

Should there be any questions with respect to this decision, please contact Sandra Morris; by mail addressed to: Director, Technology Center 3700/2900, P.O. Box 1450, Alexandria, VA 22313-1450; or by telephone at (571) 272-2622.

John Kittle
Director, Technology Center 3700/2900

UNITED STATES
PATENT AND
TRADEMARK OFFICE

JUN 12 2003

UNDER SECRETARY OF COMMERCE FOR INTELLECTUAL PROPERTY AND
DIRECTOR OF THE UNITED STATES PATENT AND TRADEMARK OFFICE
WASHINGTON, D.C. 20231
WWW.USPTO.GOV

#6

WILLIAM A BONK, III
5440 31ST NW
WASHINGTON DC 20015

In re Application of	:
William M Traut et al.	:
Serial No.: 29/155,625	: WITHDRAWAL OF ABANDONMENT
Filed: February 15, 2002	:
Attorney Docket No.: 66867-002-8	:

This is in response to applicant's Petition for withdrawal of abandonment under 37 CFR 1.181, filed March 10, 2003.

A review of the file history shows that the Office mailed an Office action to applicant on July 12, 2002, setting a one month shortened statutory period for response. As no response was received by August 12, 2002, a Notice of Abandonment was mailed February 25, 2003. This petition followed.

Applicant has submitted a copy of a response, which includes a Certificate of Mailing date of August 2, 2002. A Post card receipt was also submitted, showing that the office received the response on August 6, 2002. It is therefore concluded that the response was timely submitted, and the abandonment of the application was in error.

Applicant's request is **GRANTED**. The application is restored to a pending status with the mailing of this letter.

The application will be forwarded to the Examiner for consideration of applicant's response.

Should there be any questions with regard to this letter please contact Sandra Morris; by letter addressed to the Director, Technology Center 3700/2900, Washington, DC 20231; or by telephone at (703) 305-3102 or by facsimile transmission at (703) 305-5679.

John Kittle
Director, Technology Center 3700/2900

UNITED STATES PATENT AND TRADEMARK OFFICE

Commissioner for Patents
United States Patent and Trademark Office
P.O. Box 1450
Alexandria, VA 22313-1450
www.uspto.gov

MICHAEL D. BECK
MAGINOT, MOORE & BECK
BANK ONE CENTER/TOWER
111 MONUMENT CIRCLE, SUITE 3000
INDIANAPOLIS IN 46204-5115

COPY MAILED

OCT 17 2005

OFFICE OF PETITIONS

In re Application of	:
Matthew Scott Wallace	:
Application No. 29/155,741	: DECISION GRANTING PETITION
Filed: February 15, 2002	: UNDER 37 CFR 1.137(b)
Attorney Docket No. 01726-0001	:

This is a decision on the petition under 37 CFR 1.137(b), filed February 9, 2004, to revive the above-identified application.

The petition is **GRANTED**.

The petition satisfies the conditions for revival pursuant to the provisions of 37 CFR 1.137(b) in that (1) the reply in the form of a declaration and surcharge fee; (2) the petition fee; and (3) the required statement of unintentional delay have been received. Accordingly, the reply to the Notice To File Missing Parts Of Nonprovisional Application of March 11, 2002, is accepted as having been unintentionally delayed.

Telephone inquiries concerning this decision should be directed to the undersigned at (571) 272-3208.

This application is being forwarded to the Office of Initial Patent Examination.

Karen Creasy

Karen Creasy
Petitions Examiner
Office of Petitions
Office of the Deputy Commissioner
for Patent Examination Policy

SPE RESPONSE FOR CERTIFICATE OF CORRECTION

Paper No.: _____

DATE : 6-29-05

TO SPE OF : ART UNIT 2913

SUBJECT : Request for Certificate of Correction on Patent No.: D497765

A response is requested with respect to the accompanying request for a certificate of correction.

Please complete this form and return with file, within **7** days to:

Palm location **7580, Certificates of Correction Branch – South Tower – 9A22**

If response is for an IFW, **return to employee (named below) via PUBSCofC Team in MADRAS.**

With respect to the change(s) requested, correcting Office and/or Applicant's errors, should the patent read as shown in the certificate of correction (COCIN)? No new matter should be introduced, nor should the scope or meaning of the claims be changed.

Check Drawings

Thank You For Your Assistance

Ennis Young

Certificates of Correction Branch

Tel. No. 703-305-8309

The request for issuing the above-identified correction(s) is hereby:

Note your decision on the appropriate box.

- [x] **Approved** — All changes apply.
- [ ] **Approved in Part** — Specify below which changes **do not** apply.
- [ ] **Denied** — State the reasons for denial below.

Comments:

Caron D. Veynar

CARON D. VEYNAR — SPE

2913 — Art Unit

UNITED STATES PATENT AND TRADEMARK OFFICE

Commissioner for Patents
United States Patent and Trademark Office
P.O. Box 1450
Alexandria, VA 22313-1450
www.uspto.gov

HALL, PRIDDY, MYERS & VANDE SANDE
10220 RIVER ROAD
SUITE 200
POTOMAC, MD 20854

COPY MAILED
APR 7 2006
OFFICE OF PETITIONS

In re Application of	:	
Justine Smith, Christopher S. O'Brien Wheeler,	:	
David Cirjak and Peter Chapman	:	
Application No. 29/156,776	:	DECISION GRANTING PETITION
Filed: March 8, 2002	:	UNDER 37 CFR 1.183
For: ENCLOSURE FOR A HANDHELD	:	
COMPUTER	:	

This is in response to the "Petition Pursuant to 37 CFR 1.47(a)," filed February 6, 2006, which has been treated as a petition under 37 CFR 1.183.[1]

The petition is **granted**.

Petitioner has shown that inventor Justine Smith cannot be found or reached to sign the supplemental declaration. The requirement for the inventor to sign the supplemental declaration is hereby suspended or waived in accordance with 37 CFR 1.183.

The additional $200.00 (total $400.00, *see* 37 CFR 1.17(f)) for a petition under 37 CFR 1.183 will be charged to deposit account no. 50-0644.

The file is being forwarded to Technology Center 2900 for further examination *in due course*.

Telephone inquiries regarding this decision should be directed to the undersigned at (571) 272-3228.

Edward J. Tannouse
Petitions Attorney
Office of Petitions
Office of the Deputy Commissioner
for Patent Examination Policy

---

[1] Please note, a petition under 37 CFR 1.47 is only appropriate on the submission of the original oath or declaration. "When an inventor who executed the original declaration is refusing or cannot be found to execute a required supplemental declaration, the requirement for that inventor to sign the supplemental declaration may be suspended or waived in accordance with 37 CFR 1.183. All available joint inventor(s) must sign the supplemental declaration on behalf of themselves, if appropriate, and on behalf of the nonsigning inventor. See MPEP § 409.03(a)." See MPEP 603.

UNITED STATES PATENT AND TRADEMARK OFFICE

JUL 08 2004

Commissioner for Patents
United States Patent and Trademark Office
P.O. Box 1450
Alexandria, VA 22313-1450
www.uspto.go

KEITH KLINE
PRO-TECHTOR INTERNATIONAL SERVICES
20775 NORADA COURT
SARATOGA, CA 95070-3018

In re Application of	:
Shu Chen Chen	:
Serial No.: 29/156,878	: PETITION DECISION
Filed: March 5, 2002	:
Attorney Docket No.: 1122016	:

This is in response to applicant's Petition to Request Withdraw of Holding of Abandonment submitted September 15, 2003, and again on January 8, 2004, which is being treated as a Petition under 37 CFR 1.181, based on not having received the Office action. The delay in acting upon this petition is regretted.

This petition is **GRANTED.**

This application was held abandoned based on applicant's failure to timely respond to the Notice of Allowance mailed September 30, 2002, which set a three month statutory period of time to respond. As no response was received by December 30, 2002, a Notice of Abandonment was mailed August 20, 2003. This petition followed.

Applicant has stated that the Notice of Allowance was never received, and a copy of the docket records confirms this. The case is now returned to pending status, and the abandonment is thereby withdrawn.

The application will be promptly forwarded to the Examiner for prompt remailing of the Notice of Allowance and Issue Fee Due.

Should there be any questions with respect to this decision, please contact Sandra Morris; by mail addressed to: Director, Technology Center 3700/2900, P.O. Box 1450, Alexandria, VA 22313-1450; or by telephone at (571) 272-2622.

John Kittle
Director, Technology Center 3700/2900

UNITED STATES
PATENT AND
TRADEMARK OFFICE

UNDER SECRETARY OF COMMERCE FOR INTELLECTUAL PROPERTY AND
DIRECTOR OF THE UNITED STATES PATENT AND TRADEMARK OFFICE
WASHINGTON, D.C. 20231
WWW.USPTO.GOV

MCGUIRE WOODS LLP
2900 BANK OF AMERICA CORPORATE CENTER
100 NORTH TRYON STREET
CHARLOTTE, NC 28202-4011

In re Application of	:
Steven A. Buono	:
Serial No.: 29/157,010	: PETITION DECISION
Filed: March 12, 2002	:
Attorney Docket No.: 2005025-0052	:

This is a decision on the petition under 37 CFR 1.137(a), filed on May 7, 2003, to revive an unavoidably abandoned application. A copy of this petition is being sent to the law firm of Roberts, Abokhair & Mardula, LLC, and McGuire Woods LLP.

The petition is **DISMISSED**.

This application became abandoned for failure to respond to the Notice of Allowance and Issue Fee due, mailed February 5, 2003, which set a three-month statutory period for payment of the Issue Fee. As no response was received, the application was abandoned on May 6, 2003: this petition followed.

A petition under 37 CFR 1.137(a), as revised December 1, 1997, requires (1) a petition and petition fee of $110.00, (2) the proposed response, (3) a terminal disclaimer and disclaimer fee of $110.00 in any design application, and (4) an adequate showing of the cause of unavoidable delay. Applicant's petition lacks items (3) and (4). No terminal disclaimer and fee therefor has been filed. For all design applications a terminal disclaimer must be filed (37 CFR 1.137(c)).

Firstly, a new Power of Attorney and Change of address have not been received by the office; therefore, patent attorney Luke Anderson, who filed the petition, is not the attorney of record in the application. However, the petition is still be considered.

Applicant has stated that the failure to pay the Issue fee was unavoidable, due to the transition of files from one firm to another. However, no evidence has been submitted, including that the second firm is handling this application. Therefore, applicant must submit evidence that the new firm did not receive the Notice until after the due date of payment of the Issue fee, as well as a new Power of Attorney and change of address.

Alternatively, applicant may file a petition under 37 CFR 1.137(b) seeking revival of the above-identified application. A petition under 37 CFR 1.137(b) for revival of an application abandoned unintentionally must be filed promptly after applicant becomes aware of the abandonment of the application. The petition must be accompanied by (1) a verified statement that the application was abandoned unintentionally for the entire period of abandonment, (2) by the petition fee of $1300.00, (3) by a full and complete response to the last Office action and (4) by a terminal disclaimer and fee therefor of $110.00. If the application has been abandoned for more than one year an explanation of the delay in filing the petition is also required.

Applicant may file a renewed petition under either 37 CFR 1.137(a) or (b). Any renewed petition must be filed within TWO MONTHS in order to be considered timely.

Should there be any questions with respect to this decision, please contact Sandra Morris, by mail addressed to: Director, Technology Center 3700/2900, P.O. Box 1450, Alexandria VA 22313-1450; or by telephone at (703) 305-3102 or by facsimile transmission at (703) 305-5679.

John E. Kittle

John Kittle
Director, Technology Center 3700/2900

UNITED STATES PATENT AND TRADEMARK OFFICE

JUL 27 2004

Commissioner for Patents
United States Patent and Trademark Office
P.O. Box 1450
Alexandria, VA 22313-1450
www.uspto.gov

#13

LUKE ANDERSON
MCGUIRE WOODS LLP
THE PROSCENIUM
1170 PEACHTREE STREET, N.E.
SUITE 2100
ATLANTA GA, 30309-7649

In re Application of	:
Steven A. Buono	:
Serial No.: 29/157,010	: PETITION DECISION
Filed: March 12, 2002	:
Attorney Docket No.: 2005025-0052	:

This is a decision on the renewed Petition under 37 CFR 1.137(a), filed August 13, 2003, to revive the above identified abandoned application based on unavoidable circumstances. The delay in acting upon this petition is regretted.

A review of the file history shows that the a Notice of Allowance was mailed February 5, 2003, which set a three month statutory period for payment of the Issue fee. As no response was received, the application was abandoned on May 6, 2003. Applicant filed a petition on May 7, 2003 which was dismissed, as applicant had not provided enough evidence that the abandonment of the application was unavoidable, and a terminal disclaimer had not been submitted.

A petition under 37 CFR 1.137(a), as revised December 1, 1997, requires (1) a petition and petition fee, (2) the proposed response or Issue Fee, (3) a terminal disclaimer and disclaimer fee in any design application, and (4) an adequate showing of the cause of unavoidable delay.

Applicant has now provided sufficient evidence showing that firm did not receive the Notice until after the due date of the payment of the Issue fee. Therefore, as this error was the cause of the delay at issue, applicant has shown that the delay in submission of the issue fee was unavoidable.

Applicant's petition under 37 CFR 1.137(a) is **GRANTED**.

The application will be forwarded to Issue Branch to be printed as a patent in due course.

Should there be any questions with respect to this decision, please contact Sandra Morris; by mail addressed to: Director, Technology Center 3700/2900, P.O. Box 1450, Alexandria, VA 22313-1450; or by telephone at (571) 272-2622.

John Kittle
Director, Technology Center 3700/2900

SPE RESPONSE FOR CERTIFICATE OF CORRECTION

Paper No.:20070920

DATE : September 20, 2007

TO SPE OF : ART UNIT 2913

SUBJECT : Request for Certificate of Correction on Patent No.: D465,517

A response is requested with respect to the accompanying request for a certificate of correction.

Please complete this form and return with file, within **7** days to:
Certificates of Correction Branch - PK 3-910
Palm location **7590** - Tel. No. 305-8201

With respect to the change(s) requested, correcting Office and/or Applicant's errors, should the patent read as shown in the certificate of correction? No new matter should be introduced, nor should the scope or meaning of the claims be changed.

Thank You For Your Assistance **Certificates of Correction Branch**

The request for issuing the above-identified correction(s) is hereby:
Note your decision on the appropriate box.

☒ **Approved** **All** changes apply.

☐ **Approved in Part** Specify below which changes **do not** apply.

☐ **Denied** State the reasons for denial below.

Comments:

Caron D Veynar

SPE: Caron D. Veynar **Art Unit** 2913

UNITED STATES PATENT AND TRADEMARK OFFICE

Commissioner for Patents
United States Patent and Trademark Office
P.O. Box 1450
Alexandria, VA 22313-1450
www.uspto.gov

MAY 20 2004

TRASK BRITT
P.O. BOX 2550
SALT LAKE CITY UT 84110

In re Application of	:	
Lupo et al	:	
Serial No.: 29/157,289	:	DECISION ON PETITION
Filed: March 4, 2002	:	
For: Outsole Of A Shoe	:	

This is in response to the petition applicant filed on August 2, 2003 to make the above-identified application special under the provisions of 37 CFR 1.102(d).

Applicant has satisfied the provisions set forth in M.P.E.P. 708.02, VIII, thus the petition is **GRANTED**.

The application will be forwarded to the examiner for action on the merits commensurate with this decision.

Should there be any questions with regard to this letter please contact John Kittle by letter addressed to the Director, Technology Center 3700/2900, P.O. Box 1450 Alexandria, VA 22313-1450, or by telephone at (703) 308-0873 or by facsimile transmission at (703) 308-3139.

John E. Kittle
Director
Technology Center 3700/2900

UNITED STATES PATENT AND TRADEMARK OFFICE

COMMISSIONER FOR PATENT
UNITED STATES PATENT AND TRADEMARK OFFIC
WASHINGTON, D.C. 20231
www.uspto.go

Paper No. 4

JENNIFER A. ALBERT
HUNTON & WILLIAMS
1900 K STREET, N.W., SUITE 1200
WASHINGTON, D.C. 20006-1109

COPY MAILED

OCT 1 8 2002

OFFICE OF PETITIONS

In re Application of :
Hariolf Briggl :
Application No. 29/157,464 :
Filed: May 21, 2002 :
Attorney Docket No. 60291.000006 :

NOTICE

This is a notice regarding your request for acceptance of a fee deficiency submission under 37 CFR 1.28. On September 1, 1998, the Court of Appeals for the Federal Circuit held that 37 CFR 1.28(c) is the sole provision governing the time for correction of the erroneous payment of the issue fee as a small entity. **See DH Technology v. Synergystex International, Inc. 154 F.3d 1333, 47 USPQ2d 1865 (Fed. Cir. Sept. 1, 1998).**

The Office no longer investigates or rejects original or reissue applications under 37 CFR 1.56. **1098 Off. Gaz. Pat. Office 502 (January 3, 1989)**. Therefore, nothing in this Notice is intended to imply that an investigation was done.

Your fee deficiency submission under 37 CFR 1.28 is hereby **ACCEPTED**.

Inquiries related to this communication should be directed to the Office of Petitions Staff at (703) 305-9285.

This file is being forwarded to the Initial Patent Examination Unit.

Irvin Dingle
Petitions Examiner
Office of Petitions
Office of the Deputy Commissioner
for Patent Examination Policy

UNITED STATES PATENT AND TRADEMARK OFFICE

DEC 11 2003

COMMISSIONER FOR PATENTS
UNITED STATES PATENT AND TRADEMARK OFFICE
P.O. BOX 1450
ALEXANDRIA, VA 22313-1450
www.uspto.gov

#1

LAW OFFICES OF JOSEPH F. MURPHY
101 WEST 23RD ST.
SUITE 2367
NEW YORK, NY 10011-2490

In re Application of:	:
Patricia McEvoy Sherman	:
Serial No.: 29/157,885	: PETITION DECISION
Filed: March 26, 2002	:
Attorney Docket No.: LOJM-3478	:

This is in response to applicant's Petition under 37 CFR 1.181, filed September 3, 2003, based on having responded to the Office action.

This petition is **GRANTED.**

This application was held abandoned based on applicants failure to timely respond to the Notice to File Missing Parts of Nonprovisional Application mailed April 23, 2002, as the response apparently was not received by the Office until January 6, 2003. The Office mailed a Notice of Abandonment on July 21, 2003; this petition followed.

Applicant has stated that the response was timely mailed with an extension of time on October 19, 2002, as clearly shown in the Certificate of Mailing. Therefore, as the Office clearly erred, the Notice of Abandonment is hereby rescinded.

The application will be forwarded to an examiner for initial examination in due course.

Should there be any questions with regard to this letter please contact Sandra Morris; by letter addressed to the Director, Technology Center 3700/2900, PO Box 1450, Alexandria VA 22313-1450; or by telephone at (703) 305-3102 or by facsimile transmission at (703) 305-5679.

John E. Kittle

John Kittle
Director, Technology Center 3700/2900

UNITED STATES PATENT AND TRADEMARK OFFICE

UNITED STATES DEPARTMENT OF COMMERCE
United States Patent and Trademark Office
Address: COMMISSIONER FOR PATENTS
P.O. Box 1450
Alexandria, Virginia 22313-1450
www.uspto.gov

APPLICATION NO.	FILING DATE	FIRST NAMED INVENTOR	ATTORNEY DOCKET NO.	CONFIRMATION NO.
29/158,216	03/29/2002	Fred L. Givens	003	6201

27193 7590 11/05/2007
GARY PETERSON
211 N. ROBINSON AVE., SUITE 450
OKLAHOMA CITY, OK 73102

EXAMINER
CLARK, DORIS

ART UNIT	PAPER NUMBER
2914	

MAIL DATE	DELIVERY MODE
11/05/2007	PAPER

Please find below and/or attached an Office communication concerning this application or proceeding.

The time period for reply, if any, is set in the attached communication.

UNITED STATES PATENT AND TRADEMARK OFFICE

Commissioner for Patents
United States Patent and Trademark Office
P.O. Box 1450
Alexandria, VA 22313-1450
www.uspto.gov

11-5-07

GARY PETERSON
211 N. ROBINSON AVE., SUITE 450
OKLAHOMA CITY, OK 73102

In re Application of: FRED L. GIVENS ET AL. Serial No.: 29/158,216 Filed: 3/29/2002 Docket: 003 Title: FENCE RAIL	DECISION ON PETITION TO INVOKE SUPERVISORY AUTHORITY UNDER 37 C.F.R. § 1.181

This is a decision on the petition to Correct Inventorship in Patent mailed by applicants on December 31, 2003 and received January 5, 2004.

The petition is GRANTED.

Applicants' petition requests correction of inventorship listed on U.S. Patent D466,620, issued December 3, 2002. No decision on the original petition has been taken as of this date.

REGULATION AND PRACTICE

A grantable petition to correct inventorship in a patent under 35 U.S.C. 256 must be accompanied by:

(1) Where one or more persons are being added, a statement from each person who is being added as an inventor that the inventorship error occurred without any deceptive intention on his or her part;

(2) A statement from the current named inventors who have not submitted a statement under paragraph (b)(1) of this section either agreeing to the change of inventorship or stating that they have no disagreement in regard to the requested change;

(3) A statement from all assignees of the parties submitting a statement under paragraphs (b)(1) and (b)(2) of this section agreeing to the change of inventorship in the patent, which statement must comply with the requirements of § 3.73(b) of this chapter; and

(4) The fee set forth in § 1.20(b).

REVIEW OF FACTS

In this case, applicants met each of the requirements set forth above in the petition papers submitted January 5, 2004.

DECISION

For the above-stated reason, the petition is GRANTED. The delay in considering the petition is regretted.

The patented file has been forwarded to Certificate of Corrections Branch for issuance of a certificate naming Edward L. Gibbs as an additional joint inventor.

Any inquiry regarding this decision should be directed to Rob Spear, Design Practice Specialist, at (571) 272-2645.

Robert M. Spear, Design Practice Specialist
Technology Center 2900

UNITED STATES PATENT AND TRADEMARK OFFICE

Commissioner for Patents
United States Patent and Trademark Office
P.O. Box 1450
Alexandria, VA 22313-1450
www.uspto.gov

11-5-07

GARY PETERSON
211 N. ROBINSON AVE., SUITE 450
OKLAHOMA CITY, OK 73102

In re Application of: FRED L. GIVENS ET AL. Serial No.: 29/158,216 (U.S. PATENT D466,620) Filed: MARCH 29, 2002 Docket: 003 Title: FENCE RAIL	DECISION ON PETITION TO INVOKE SUPERVISORY AUTHORITY UNDER 37 C.F.R. § 1.181

This is a decision on the petition filed on August 20, 2007 to invoke supervisory authority under 37 C.F.R. § 1.181 to require action on a Petition to Correct Inventorship.

The petition is GRANTED.

Applicants' petition requests action on a Petition to Correct Inventorship in Patent received January 5, 2004. No decision on the original petition has been taken as of this date.

REGULATION AND PRACTICE

A grantable petition to invoke supervisory authority under 37 C.F.R. § 1.181 must, *inter alia*:
(1) Be from any action or requirement of any examiner in the *ex parte* prosecution of an application, or in ex parte or inter partes prosecution of a reexamination proceeding which is not subject to appeal to the Board of Patent Appeals and Interferences or to the court;
(2) Be to invoke the supervisory authority of the Director in appropriate circumstances.
(3) Contain a statement of the facts involved and the point or points to be reviewed and the action requested. Briefs or memoranda, if any, in support thereof should accompany or be embodied in the petition; and where facts are to be proven, the proof in the form of affidavits or declarations (and exhibits, if any) must accompany the petition.
(4) When a petition is taken from an action or requirement of an examiner in the *ex parte* prosecution of an application, or in the *ex parte* or *inter partes* prosecution of a reexamination proceeding, it may be required that there have been a proper request for reconsideration (§ 1.111) and a repeated action by the examiner.
(5) Where a fee is required for a petition to the Director the appropriate section of this part will so indicate. If any required fee does not accompany the petition, the petition will be dismissed.
(e) Oral hearing will not be granted except when considered necessary by the Director.
(f) The mere filing of a petition will not stay any period for reply that may be running against the application, nor act as a stay of other proceedings. Any petition under this part not filed within

two months of the mailing date of the action or notice from which relief is requested may be dismissed as untimely, except as otherwise provided. This two-month period is not extendable.

REVIEW OF FACTS

In this case, applicants are considered to have met all pertinent requirements set forth above.

DECISION

For the above-stated reason, the petition is GRANTED. The delay in processing the original petition of January 5, 2004 is regretted.

The petition received in this file on January 5, 2004 to correct inventorship in US Patent D466,620 will be reviewed and decided in an expeditious manner.

Any inquiry regarding this decision should be directed to Rob Spear, Design Practice Specialist, at (571) 272-2645.

Robert M. Spear, Design Practice Specialist
Technology Center 2900

UNITED STATES PATENT AND TRADEMARK OFFICE

UNITED STATES DEPARTMENT OF COMMERCE
United States Patent and Trademark Office
Address: COMMISSIONER FOR PATENTS
P.O. Box 1450
Alexandria, Virginia 22313-1450
www.uspto.gov

APPLICATION NO.	FILING DATE	FIRST NAMED INVENTOR	ATTORNEY DOCKET NO.	CONFIRMATION NO.
29/158,216	03/29/2002	Fred L. Givens	003	6201

27193 7590 11/05/2007
GARY PETERSON
211 N. ROBINSON AVE., SUITE 450
OKLAHOMA CITY, OK 73102

EXAMINER
CLARK, DORIS

ART UNIT	PAPER NUMBER
2914	

MAIL DATE	DELIVERY MODE
11/05/2007	PAPER

Please find below and/or attached an Office communication concerning this application or proceeding.

The time period for reply, if any, is set in the attached communication.

UNITED STATES PATENT AND TRADEMARK OFFICE

COMMISSIONER FOR PATENTS
UNITED STATES PATENT AND TRADEMARK OFFICE
P.O. BOX 1450
ALEXANDRIA, VA 22313-1450
www.uspto.gov

MARC A. VIVENZIO
LORUSSO LOUD & KELLY LLP
15 RYE STREET SUITE 312
PORTSMOUTH, NH 03801

MAR 25 2005

In re Application of
Hung C. Truong
Serial No.: 29/158,269
Filed: April 3, 2002
Attorney Docket No.: EMC-103

: PETITION DECISION

This is a decision on applicant's petition to revive patent application under 37 CFR 1.137(b), received January 7, 2005, to revive an unintentionally abandoned application.

This application became abandoned for failure to fully respond to the Notice of Allowance mailed June 25, 2004, which set a three-month statutory period to submit the Issue Fee. The Issue fee was paid in part on September 27, 2004; however, as the total fee was not submitted, a Notice of Abandonment was mailed to applicant November 12, 2004. Applicant then filed this petition.

A grantable petition for a design application under 37 CFR 1.137(b), as revised December 1, 1997, requires four items: (1) a petition and petition fee; (2) a complete response if not earlier made; (3) a statement that the entire period of delay in prosecution was unintentional; and (4) a terminal disclaimer and disclaimer fee. The requirement for filing a terminal disclaimer has been waived, as the Petition was filed within two months of the mailing of the Notice of Abandonment.

Applicant's petition is **GRANTED**.

The terminal disclaimer fee of $65.00 will be refunded to applicant's Deposit Account 12-2147, as directed.

The application will be forwarded to Publication Division for printing as a patent in due course.

Should there be any questions with respect to this decision, please contact Sandra Morris; by mail addressed to: Director, Technology Center 1700/2900, P.O. Box 1450, Alexandria, VA 22313-1450; or by telephone at (571) 272-2622 or by facsimile transmission at (571) 273-2622.

JMStone
Jacqueline Stone
Director, Technology Center 1700/2900

UNITED STATES PATENT AND TRADEMARK OFFICE

COMMISSIONER FOR PATENTS
UNITED STATES PATENT AND TRADEMARK OFFICE
P.O. BOX 1450
ALEXANDRIA, VA 22313-1450
www.uspto.gov

5/18/05

JOHN S. ARTZ
SUITE 250
28333 TELEGRAPH ROAD
SOUTHFIELD, MI 48034

In re Application of
Russell W. Strong
Serial No.: 29/158,471
Filed: April 4, 2002
Attorney Docket No.: IVI 1020 DUS

: PETITION DECISION

This is a decision on the Petition to Revive under 37 CFR 1.137(b), filed by facsimile March 21, 2005, to revive an unintentionally abandoned application.

The petition is **DISMISSED**.

This application became abandoned for failure to fully respond to the Notice of Allowance and Issue Fee due, mailed September 3, 2003, which required a new Declaration, formal drawings, and the issue fee. The issue fee was submitted December 9, 2003; however, as no formal drawings or Declaration was received, a Notice of Abandonment was mailed January 21, 2004. This petition followed.

A grantable petition under 37 CFR 1.137(b), as revised December 1, 1997, requires four items: (1) a petition and petition fee; (2) a complete response if not earlier made; (3) a statement that the entire period of delay in prosecution was unintentional; and (4) a terminal disclaimer and disclaimer fee. Applicant's petition lacks item (2).

Applicant is advised that the drawings are approved; however, for patent reproduction purposes, the formal drawings should be submitted to the Office non-electronically, i.e., via the mail. Applicant also did not submit a new Declaration, as required by the Examiner in the Examiner's Amendment.

Furthermore, where a petition pursuant to 37 CFR 1.137 is not filed within 1 year of the date of abandonment of the application, applicant is required to submit information as to when applicant first became aware of the abandonment of the application, and a showing as to how the delay in discovering the abandoned status of the application occurred. MPEP 711.03(c).

Any renewed petition in order to be considered timely must be filed within TWO MONTHS of the date of mailing of this decision.

Should there be any questions with respect to this decision, please contact Sandra Morris; by mail addressed to: Director, Technology Center 1700/2900, P.O. Box 1450, Alexandria, VA 22313-1450; or by telephone at (571) 272-2622.

JMStone

Jacqueline Stone
Director, Technology Center 1700/2900

UNITED STATES PATENT AND TRADEMARK OFFICE

Commissioner for Patents
United States Patent and Trademark Office
P.O. Box 1450
Alexandria, VA 22313-1450
www.uspto.gov

COPY MAILED

JAN 24 2007

OFFICE OF PETITIONS

John S. Artz
Suite 250
28333 Telegraph Road
Southfield MI 48034

In re Application of	:	
STRONG	:	DECISION
Application No. 29/158,471	:	ON PETITION
Filed: April 4, 2002	:	
Attorney Docket No. IVI 1020 DUS	:	

This is a decision on a renewed petition under 37 CFR 1.137(b), filed July 18, 2005, to revive the above-identified application.

The petition is **GRANTED**.

The application became abandoned for failure submit a complete reply[1] in a timely manner in reply to the Notice of Allowance and Notice of Allowability, mailed September 9, 2003, which set a statutory period for reply of three (3) months. Accordingly, the application became abandoned on December 10, 2003.

The petition satisfies the conditions for revival pursuant to the provisions of 37 CFR 1.137(b) in that (1) the reply in the form of an issue fee, a supplemental declaration, and corrected drawings; (2) the petition fee; (3) the required statement of unintentional delay; and (4) the terminal disclaimer and fee required by 37 CFR 1.137(d) have been received. Accordingly, the complete reply to the September 9, 2003 Notice of Allowance and Notice of Allowability is accepted as having been unintentionally delayed.

The petition fee of $750 and the terminal disclaimer fee of $65 have been charged to petitioner's deposit account 50-0476 as authorized in the Fee Transmittal sheet submitted with the petition on March 21, 2005.

Telephone inquiries concerning this decision should be directed to undersigned at (571) 272-4787.

The application matter is referred to the Office of Patent Publication.

Denise Pothier
Petitions Examiner
Office of Petitions

[1] The issue fee and supplemental declaration were received timely on December 9, 2003 (certificate of mailing date). Corrected drawings were not received.

UNITED STATES PATENT AND TRADEMARK OFFICE

COMMISSIONER FOR PATENTS
UNITED STATES PATENT AND TRADEMARK OFFICE
P.O. BOX 1450
ALEXANDRIA, VA 22313-1450
www.uspto.gov

DEC 1 1 2003

#5

COLGATE-PALMOLIVE COMPANY
PATENT DEPARTMENT
909 RIVER ROAD
P.O. BOX 1343
PISCATAWAY, NJ 08855-1343

In re Application of:	:
Bruce Cummings	:
Serial No.: 29/158,521	: PETITION DECISION
Filed: April 4, 2002	:
Attorney Docket No.: IR 6277-00	:

This is in response to applicant's Petition under 37 CFR 1.181, filed November 7, 2003, based on not having received correspondence from the Office.

This petition is **GRANTED.**

This application was held abandoned based on applicants failure to timely respond to the Notice of Incomplete Nonprovisional Application mailed May 7, 2002, as applicant did not provide a specification with a claim, or a declaration. A response was apparently received on May 10, 2002; however, the response still did not include the missing items. The Office mailed a Notice of Abandonment on October 14, 2003, as a proper response had not been received. This petition followed.

Applicant has stated that they never received the Notice, and has submitted docketing records to show this. It appears that the Post Office returned the Notice to the Patent Office, the papers were photocopied (due to the government-wide anthrax threat), and erroneously placed in the file. Therefore, it is clear that as the Notice was returned to the Office, that applicant could not have responded and the abandonment was in error.

The Notice will therefore be remailed to applicant, as copies of the declaration and specification from the parent application still must be submitted before the application can be completed and assigned to an examiner. See MPEP 601.

Should there be any questions with regard to this letter please contact Sandra Morris; by letter addressed to the Director, Technology Center 3700/2900, PO Box 1450, Alexandria VA 22313-1450; or by telephone at (703) 305-3102 or by facsimile transmission at (703) 305-5679.

John E. Kittle

John Kittle
Director, Technology Center 3700/2900

UNITED STATES PATENT AND TRADEMARK OFFICE

UNITED STATES DEPARTMENT OF COMMERCE
United States Patent and Trademark Office
Address: COMMISSIONER FOR PATENTS
P.O. Box 1450
Alexandria, Virginia 22313-1450
www.uspto.gov

APPLICATION NO.	FILING DATE	FIRST NAMED INVENTOR	ATTORNEY DOCKET NO.	CONFIRMATION NO.
29/158,557	04/05/2002	John B. Brandon	4978-001	6738

24112 7590 01/12/2005
COATS & BENNETT, PLLC
P O BOX 5
RALEIGH, NC 27602

EXAMINER
BROOKS, CATHRON C

ART UNIT	PAPER NUMBER
2913	7

DATE MAILED: 01/12/2005

Please find below and/or attached an Office communication concerning this application or proceeding.

UNITED STATES PATENT AND TRADEMARK OFFICE

Commissioner for Patents
United States Patent and Trademark Office
P.O. Box 1450
Alexandria, VA 22313-1450
www.uspto.gov

COATS & BENNETT, P.L.L.C.
P.O. BOX 5
RALEIGH, NC 27602

In re Application of	:
John B. Brandon	:
Serial No.: 29/158,557	: PETITION DECISION
Filed: April 5, 2002	:
Attorney Docket No.: 4978-001	:

This is a decision on applicant's petition to revive patent application under 37 CFR 1.137(a), which is being treated as a Petition under 37 CFR 1.181 submitted July 26, 2004, to revive an unavoidably abandoned application. The delay in acting upon this petition is regretted.

This application became abandoned for failure to respond to the Office action mailed September 12, 2003, which set a two-month shortened statutory period to respond. As no response was received by November 12, 2003, a Notice of Abandonment was mailed April 21, 2004. Applicant then filed this petition.

Applicant has submitted that the abandonment of the application was unavoidable, as applicant did not receive a copy of the Office action. Applicant has submitted a Declaration and a copy of the Docket record, showing that the Office action was never received. Therefore, the application will be returned to pending status, and the Notice of Abandonment withdrawn.

Applicant's petition is <u>GRANTED.</u>

The Terminal disclaimer fee of $110.00 and the Petition fee of $110.00 will be refunded to applicant's Deposit Account 18-1167, as there are no fees associated with petitions granted under 37 CFR 1.181.

The application will be promptly forwarded to the Examiner examination of applicant's response.

Should there be any questions with respect to this decision, please contact Sandra Morris; by mail addressed to: Director, Technology Center 3700/2900, P.O. Box 1450, Alexandria, VA 22313-1450; or by telephone at (571) 272-2622.

John Kittle
Director, Technology Center 3700/2900

UNITED STATES PATENT AND TRADEMARK OFFICE

APR 1 3 2004

Commissioner for Patents
United States Patent and Trademark Office
P.O. Box 1450
Alexandria, VA 22313-1450
www.uspto.gov

FRANK C. TURNER
CHEVRON TEXACO LAW DEPARTMENT
INTELLECTUAL PROPERTY UNIT
1111 BAGBY STREET, SUITE 4040
HOUSTON, TX 77002

In re Application of	:
John C. Begg	:
Serial No.: 29/158,647	: PETITION DECISION
Filed: April 5, 2002	:
Attorney Docket No.: 29/158,647	:

This is a decision on applicant's petition to revive patent application under 37 CFR 1.137(b), filed on December 16, 2003, to revive an unintentionally abandoned application. The delay in acting upon this petition is regretted.

This application became abandoned for failure to timely respond to the Notice to filed Missing Parts of Nonprovisional Application, mailed May 6, 2002, which set a two month period to respond. As no response was received by July 6, 2002, a Notice of Abandonment was mailed on September 9, 2003; this petition followed.

A grantable petition under 37 CFR 1.137(b), as revised December 1, 1997, requires four items: (1) a petition and petition fee; (2) a complete response if not earlier made; (3) a statement that the entire period of delay in prosecution was unintentional; and (4) a terminal disclaimer and disclaimer fee.

Applicant's petition is **GRANTED**.

The application will be forwarded to an Examiner for initial examination in due course.

Should there be any questions with respect to this decision, please contact Sandra Morris; by mail addressed to: Director, Technology Center 3700/2900, P.O. Box 1450, Alexandria, VA 22313-1450; or by telephone at (571) 272-2622.

John Kittle
Director, Technology Center 3700/2900

UNITED STATES PATENT AND TRADEMARK OFFICE

COMMISSIONER FOR PATENTS
UNITED STATES PATENT AND TRADEMARK OFFICE
P.O. BOX 1450
ALEXANDRIA, VA 22313-1450
www.uspto.gov

MERCHANT & GOULD PC
P.O. BOX 2903
MINNEAPOLIS, MN 55402-0903

COPY MAILED

SEP 29 2005

OFFICE OF PETITIONS

In re Application of :
Jarod J. Jacobs, et al. :
Application No. 29/158,740 :
Filed: April 8, 2002 :
Attorney Docket No. 838.285US01 :

ON PETITION

This is a decision on the petition filed September 22, 2005 under 37 CFR 1.313(c)(2) to withdraw the above-identified application from issue after payment of the issue fee. See 1233 *Official Gazette* 54 (April 11, 2000).

The petition is **GRANTED**.

Petitioner requests that the application be withdrawn from issue to permit abandonment for consideration of an Information Disclosure Statement in a continued prosecution application (CPA) under 37 CFR 1.53(d).

The application is withdrawn from issue.

Petitioner is advised that the issue fee paid on July 26, 2005, using a Certificate of Mailing or Transmission under 37 CFR 1.8 dated July 22, 2005, in the parent application is not refundable nor can it be applied towards any new Notice of Allowance which may issue on the CPA filed September 22, 2005.

Telephone inquiries should be directed to the undersigned at (571) 272-3204.

The application is being referred to Technology Center AU 2911 for processing of the CPA.

Sherry D. Brinkley

Sherry D. Brinkley
Petitions Examiner
Office of Petitions
Office of the Deputy Commissioner
for Patent Examination Policy

UNITED STATES PATENT AND TRADEMARK OFFICE

MAY 06 2004

COMMISSIONER FOR PATENTS
UNITED STATES PATENT AND TRADEMARK OFFICE
P.O. BOX 1450
ALEXANDRIA, VA 22313-1450
www.uspto.gov

HELLER EHRMAN WHITE & MCAULIFFE LLP
275 MIDDLEFIELD ROAD
MENLO PARK CA 94025-3506

In re Application of	:
Matthew White	:
Serial No.: 29/158,761	: PETITION DECISION
Filed: April 8, 2002	:
Attorney Docket No.: 26615-0022	:

This is in response to applicants' Petition to Withdraw Holding of Abandonment under 37 CFR 1.181, submitted March 31, 2004, based on having responded to the Office action.

This petition is **GRANTED.**

This application was held abandoned based on applicant's failure to timely respond to the Office action mailed September 8, 2003, which set a two-month shortened statutory period of time to respond. As no response was received by November 10, 2003, the Office mailed a Notice of Abandonment on March 24, 2004. This petition followed.

Applicant has stated that they did respond to the Office action, as evidenced by the copy of the Certificate of Mailing date of March 8, 2004 with a Petition for an extension of time. A copy of the response was found, and had been entered into the file incorrectly. Therefore, the Office erred in abandoning the application.

The application will be promptly forwarded to the Examiner for consideration of applicant's response.

Should there be any questions with respect to this decision, please contact Sandra Morris; by mail addressed to: Director, Technology Center 3700/2900, P.O. Box 1450, Alexandria, VA 22313-1450; or by telephone at (571) 272-2622.

John Kittle
Director, Technology Center 3700/2900

UNITED STATES PATENT AND TRADEMARK OFFICE

JUL 08 2004

~~JUN 08 2004~~

COMMISSIONER FOR PATENTS
UNITED STATES PATENT AND TRADEMARK OFFICE
P.O. BOX 1450
ALEXANDRIA, VA 22313-1450
www.uspto.go

ONE DAYTON CENTRE
ONE SOUTH MAIN STREET
SUITE 500
DAYTON, OH 45402-2023

In re Application of
Melvin J Henderson
Serial No.: 29/158,896
Filed: April 11, 2002
Attorney Docket No.: HED 0001 DA

: PETITION DECISION

This is a decision on applicant's Petition under 37 CFR 1.137(b) received October 17, 2003, February 5, 2004, and May 7, 2004, to revive an unintentionally abandoned application. The delay in acting upon these petitions is regretted.

This application became abandoned for failure to respond to the Office action mailed November 15, 2002, which set a two-month shortened statutory period to respond. As no response was submitted by January 15, 2003, a Notice of Abandonment was mailed June 26, 2003. Applicant then filed this petition.

A grantable petition under 37 CFR 1.137(b), as revised December 1, 1997, requires four items: (1) a petition and petition fee; (2) a complete response if not earlier made; (3) a statement that the entire period of delay in prosecution was unintentional; and (4) a terminal disclaimer and disclaimer fee. A proper terminal disclaimer was submitted by facsimile on June 18, 2004.

Applicant's petition is **GRANTED.**

The application will be forwarded to the Examiner for review applicant's response in due course.

Should there be any questions with respect to this decision, please contact Sandra Morris; by mail addressed to: Director, Technology Center 3700/2900, P.O. Box 1450, Alexandria, VA 22313-1450; or by telephone at (571) 272-2622.

John Kittle
Director, Technology Center 3700/2900

UNITED STATES PATENT AND TRADEMARK OFFICE

JUN 1 0 2004

Commissioner for Patents
United States Patent and Trademark Office
P.O. Box 1450
Alexandria, VA 22313-1450
www.uspto.gov

#8

WENDEROTH, LIND & PONACK, LLP
2033 K STREET N.W.
SUITE 800
WASHINGTON, DC 20006-1021

In re Application of	:
Helmut Swarovski	:
Serial No.: 29/158,989	: PETITION DECISION
Filed: April 15, 2002	:
Attorney Docket No.: 2002-0473A	:

This is a decision on applicant's Petition for Withdrawal of holding of Abandonment, which is being treated as a Petition under 37 CFR 1.181 submitted March 15, 2004, to revive an unavoidably abandoned application.

This application became abandoned for failure to respond to the Office action mailed July 11, 2003, which set a one-month shortened statutory period to respond. As no response was received by August 11, 2003, a Notice of Abandonment was mailed March 5, 2004. Applicant then filed this petition.

Applicant has submitted that the response was timely submitted, as evidenced from the copy of the response, which includes a Post Card Receipt date of August 8, 2003. While this paper was not matched with the application, it is clear that applicant timely responded to the Office action and the application was abandoned in error.

Applicant's petition is **GRANTED.**

The application will be forwarded to the Examiner for evaluation of applicant's response in due course.

Should there be any questions with respect to this decision, please contact Sandra Morris; by mail addressed to: Director, Technology Center 3700/2900, P.O. Box 1450, Alexandria, VA 22313-1450; or by telephone at (571) 272-2622.

John Kittle
Director, Technology Center 3700/2900

UNITED STATES PATENT AND TRADEMARK OFFICE

COMMISSIONER FOR PATENTS
UNITED STATES PATENT AND TRADEMARK OFFICE
WASHINGTON, D.C. 20231
www.uspto.gov
DW 01-03

Paper No. 4

HOWARD & HOWARD ATTORNEYS, P.C.
THE PINEHURST OFFICE CENTER, SUITE #101
39400 WOODWARD AVENUE
BLOOMFIELD HILLS MI 48304-5151

COPY MAILED

JAN 2 1 2003

OFFICE OF PETITIONS

In re Application of	:	
Hyun-Woo Shin	:	
Application No. 29/159,009	:	DECISION GRANTING PETITION
Filed: 15 March, 2002	:	
Att'y Docket No. 68, 115-006	:	

This is a decision on the petition filed on 18 November, 2002, requesting that the Notice of Incomplete Reissue Application mailed on 10 September, 2002, be withdrawn.

On 15 March, 2002, the application was filed as a reissue application and was assigned application No. 10/098,684. On 18 April, 2002, a Notice of New Assignment Application Number was mailed, stating that the application had been assigned an incorrect application number, and that the new application number would be No. 29/159,009.

On 10 September, 2002, Initial Patent Examination Division mailed a Notice of Incomplete Reissue Application was mailed, stating that the application had not been accorded a filing date because the application was deposited without drawings and that the filing date of the application would be the date of receipt of the drawings.

In response, on 18 November, 2002, the present petition, and three (3) sheets of drawings were filed. Petitioner argues that three (3) sheets of drawings were filed with the other application papers on 15 March, 2002, and that the drawings were misplaced in the U.S. Patent and Trademark Office (Office). In support of the petition, a copy of petitioner's postcard receipt

was supplied. The postcard receipt shows an Office stamp of 15 March, 2002, and previously assigned application No. 10/098,684, and identifies the application by attorney docket number, and the original patent and application number, and acknowledges receipt of, *inter alia*, three (3) sheets of drawings. Petitioner requests that the application, including three (3) sheets of drawings, be accorded a filing date of 15 March, 2002.

Upon review of the record, no sheets of drawings deposited on 15 March, 2002, have been located among the application papers. However, the evidence is convincing that the application papers deposited on 15 March, 2002, included three (3) sheets of drawings, which were subsequently misplaced in the USPTO. Therefore, the application, including the three (3) sheets of drawings, was complete on filing and entitled to a filing date of 15 March, 2002.

In view of the above, the petition is granted.

The Notice of Incomplete Nonprovisional Application mailed on 15 March, 2002, is withdrawn. The petition fee of $130.00 will be credited to counsel's deposit account, No. 08-2789, as authorized in the present petition.

The application will be processed and examined using the three (3) sheets of drawings supplied on 18 November, 2002.

The application is being returned to Initial Patent Examination Division for processing with a filing date of 15 March, 2002, using the application papers filed on that date, and the three (3) sheets of drawings supplied on 18 November, 2002, for an indication in Office records that three (3) sheets of drawings were present on filing, and mailing of a corrected Filing Receipt.

Telephone inquiries specific to this matter should be directed to the undersigned at 703 308-6918.

D Wood

Douglas I. Wood
Senior Petitions Attorney
Office of Petitions

UNITED STATES PATENT AND TRADEMARK OFFICE

C mmissi ner for Patents
United States Patent and Trademark Office
Washingt n, D.C. 20231
www.uspto.gov

Paper No. 5

CHRISTIE PARKER & HALE LLP
P O BOX 7068
PASADENA CA 91109-7068

COPY MAILED

SEP 3 0 2002

OFFICE OF PETITIONS

In re Application of	:	
Adam K. Kolawa et al	:	
Application No. 29/159,357	:	ON PETITION
Filed: April 18, 2002	:	
Attorney Docket No. 48296/LTR/P396	:	

This is a decision on the petition filed "[p]ursant to 37 CFR § 1.313(d)," entitled "Petition to Defer Patent Issuance," filed July 19, 2002.

The petition is **dismissed** as inappropriate.

Petitioner seeks under "37 CFR § 1.313(d) that issuance of a patent on this design be deferred until the time of issuance of utility patent application number 09/128,706."

37 CFR 1.313(d) states:

> A petition under this section will not be effective to withdraw the application from issue unless it is actually received and granted by the appropriate officials before the date of issue. Withdrawal of an application from issue after payment of the issue fee may not be effective to avoid publication of application information.

37 CFR 1.313(d) does not provide for deferral of issuance of a patent. Therefore, deferral of issuance of a patent under this section of the CFR is inappropriate.

Further, a petition to defer the issuance of a patent (under 37 CFR 1.314) is not appropriate until the issue fee has been paid. Note MPEP Section 1306.01. In the

instant application, since this application has not yet been examined and passed to issue, a petition to defer issuance is not the appropriate avenue of relief herein.

However, petitioner may wish to seek relief under 37 CFR 1.103. Note also MPEP Section 709. The mere suggestion that petitioner seek relief under 37 CFR 1.103 should not in any way be construed as an indication that the request will be granted.

This application is being returned to the Office of Initial Patent Examination to complete processing of the application.

Frances Hicks

Frances Hicks
Petitions Examiner
Office of Petitions
Office of the Deputy Commissioner
for Patent Examination Policy
(703) 305-8680

UNITED STATES PATENT AND TRADEMARK OFFICE

COMMISSIONER FOR PATENT
UNITED STATES PATENT AND TRADEMARK OFFIC
WASHINGTON, D.C. 20231
www.uspto.go

Paper No. 5

CHARLES H. DEVOE
KOLISCH HARTWELL, P.C.
520 S.W. YAMHILL STREET, SUITE 200
PORTLAND, OREGON 97204

COPY MAILED

SEP 3 0 2002

OFFICE OF PETITIONS

In re Application of :
Bjorn Refsum :
Application No. 29/159,544 :
Filed: April 22, 2002 :
Attorney Docket No. OPA 309 :

NOTICE

This is a notice regarding your request for acceptance of a fee deficiency submission under 37 CFR 1.28. On September 1, 1998, the Court of Appeals for the Federal Circuit held that 37 CFR 1.28(c) is the sole provision governing the time for correction of the erroneous payment of the issue fee as a small entity. **See DH Technology v. Synergystex International, Inc. 154 F.3d 1333, 47 USPQ2d 1865 (Fed. Cir. Sept. 1, 1998).**

The Office no longer investigates or rejects original or reissue applications under 37 CFR 1.56. **1098 Off. Gaz. Pat. Office 502 (January 3, 1989)**. Therefore, nothing in this Notice is intended to imply that an investigation was done.

Your fee deficiency submission under 37 CFR 1.28 is hereby **ACCEPTED**.

Inquiries related to this communication should be directed to the Office of Petitions Staff at (703) 305-9285.

This file is being forwarded to Technology Center 2900.

Irvin Dingle
Petitions Examiner
Office of Petitions
Office of the Deputy Commissioner
for Patent Examination Policy

UNITED STATES PATENT AND TRADEMARK OFFICE

COMMISSIONER FOR PATENTS
UNITED STATES PATENT AND TRADEMARK OFFICE
P.O. BOX 1450
ALEXANDRIA, VA 22313-1450
www.uspto.gov

#12

FISH & RICHARDSON PC
225 FRANKLIN STREET
BOSTON MA 02110

COPY MAILED

OCT 03 2003

OFFICE OF PETITIONS

In re Application of
Duy Phong Vu
Application No. 29/159,603
Filed: April 24, 2002
Attorney Docket No. 02894-542001

ON PETITION

This is a decision on the petition, filed by facsimile transmission on October 3, 2003, under 37 CFR 11.313(c)(3) to withdraw the above-identified application from issue after payment of the issue fee.

The petition is GRANTED.

The above-identified application is withdrawn from issue in favor of a continuation prosecution application (CPA) under 37 CFR 1.53(d).

Petitioner is advised that the issue fee paid on July 7, 2003 in the parent application is not refundable nor can it be applied towards any new Notice of Allowance which may issue on the CPA filed September 2, 2003.

Telephone inquiries should be directed to the undersigned at (703) 305-8859.

After receipt of the file in the Office of Petitions, the application will be forwarded to Technology Center 2900 for processing of the CPA.

Karen Creasy

Karen Creasy
Petitions Examiner
Office of Petitions
Office of the Deputy Commissioner
for Patent Examination Policy

UNITED STATES PATENT AND TRADEMARK OFFICE

COMMISSIONER FOR PATENTS
UNITED STATES PATENT AND TRADEMARK OFFICE
P.O. BOX 1450
ALEXANDRIA, VA 22313-1450
WWW.USPTO.GOV

Paper No. #13

SMITH PATENT OFFICE
1901 PENNSYLVANIA AVENUE NW
SUITE 200
WASHINGTON DC 20006

COPY MAILED

JUL 3 0 2003

OFFICE OF PETITIONS

In re Application of
Masashi Ishida
Application No. 29/159,905
Filed: May 1, 2002
Attorney Docket No. 0055-015001

ON PETITION

This is a decision on the petition, filed July 29, 2003, under 37 CFR 1.313(c)(3) to withdraw the above-identified application from issue after payment of the issue fee.

The petition is **GRANTED**.

The above-identified application is withdrawn from issue in favor of a continued prosecution application (CPA) under 37 CFR 1.53(d).

Petitioner is advised that the issue fee paid on February 28, 2003 in the parent application is not refundable nor can it be applied towards any new Notice of Allowance which may issue on the CPA filed July 29, 2003.

Telephone inquiries should be directed to the undersigned at (703) 305-8859.

After receipt of the file in the Office of Petitions, the application will be forwarded to Technology Center Art Unit 2912 for processing of the CPA.

Karen Creasy

Karen Creasy
Petitions Examiner
Office of Petitions
Office of the Deputy Commissioner
for Patent Examination Policy

UNITED STATES PATENT AND TRADEMARK OFFICE

NOV 20 2003

Commissioner for Patents
United States Patent and Trademark Office
P.O. Box 1450
Alexandria, VA 22313-1450
www.uspto.gov

#7

MICHAEL J. BERGER
AMSTER, ROGHSTEIN & EBENSTEIN
90 PARK AVENUE
NEW YORK, NY 10016

In re Application of	:
Shlomo Cohen	:
Serial No.: 29/159,926	: PETITION DECISION
Filed: April 30, 2002	:
Attorney Docket No.: 96250/10	:

This is a decision on the Petition to Revive under 37 CFR 1.137(b), filed September 8, 2003, to revive an unintentionally abandoned application.

The petition is **DISMISSED**.

This application became abandoned for failure to respond to the Notice of Allowance and Issue Fee Due, mailed September 9, 2002, which set a three month shortened statutory period to submit the Issue Fee and formal drawings. As no response had been received by December 9, 2002, a Notice of Abandonment was mailed March 31, 2003. This petition followed.

A grantable petition under 37 CFR 1.137(b), as revised December 1, 1997, requires four items: (1) a petition and petition fee; (2) a complete response if not earlier made; (3) a statement that the entire period of delay in prosecution was unintentional; and (4) a terminal disclaimer and disclaimer fee. This petition lacks item (2), as the formal drawings contain new matter. A complete response must include formal drawings which include the corrections required by the Examiner; please refer to the enclosed photocopies of the drawings, in which new matter has been highlighted in yellow by the Examiner.

Any renewed petition in order to be considered timely must be filed within TWO MONTHS of the date of mailing of this decision.

Should there be any questions with regard to this letter please contact Sandra Morris; by letter addressed to the Director, Technology Center 3700/2900, PO Box 1450, Alexandria VA 22313-1450; or by telephone at (703) 305-3102 or by facsimile transmission at (703) 305-5679.

John Kittle
Director, Technology Center 3700/2900

UNITED STATES PATENT AND TRADEMARK OFFICE

MAY 06 2004

COMMISSIONER FOR PATENTS
UNITED STATES PATENT AND TRADEMARK OFFICE
P.O. BOX 1450
ALEXANDRIA, VA 22313-1450
www.uspto.gov

MICHAEL J. BERGER
AMSTER, ROGHSTEIN & EBENSTEIN
90 PARK AVENUE
NEW YORK, NY 10016

In re Application of	:
Shlomo Cohen	:
Serial No.: 29/159,926	: PETITION DECISION
Filed: April 30, 2002	:
Attorney Docket No.: 96250/10	:

This is in response to applicant's renewed Petition for Revival of an Application to Withdraw Abandonment under 37 CFR 1.137(b), filed January 16, 2004.

This application became abandoned for failure to respond to the Notice of Allowance and Issue Fee Due, mailed September 9, 2002, which set a three month shortened statutory period to submit the issue fee and formal drawings. As no response was received, a Notice of Abandonment was mailed March 31, 2003. Applicant submitted a Petition to Revive under 37 CFR 1.137(b) on September 8, 2003 which was dismissed, as the drawings contained new matter. This renewed petition followed.

As the new drawings are acceptable, applicant's petition is **GRANTED**.

The application will be forwarded to Publication Division for printing as a patent in due course.

Should there be any questions with respect to this decision, please contact Sandra Morris; by mail addressed to: Director, Technology Center 3700/2900, P.O. Box 1450, Alexandria, VA 22313-1450; or by telephone at (571) 272-2622.

John Kittle
Director, Technology Center 3700/2900

UNITED STATES PATENT AND TRADEMARK OFFICE

COMMISSIONER FOR PATENTS
UNITED STATES PATENT AND TRADEMARK OFFICE
P.O. BOX 1450
ALEXANDRIA, VA 22313-1450
www.uspto.gov

HAYES SIMPSON GREENE LLP
600 W. BROADWAY, SUITE 400
SAN DIEGO, CA 92101

In re Application of	:
Timothy Paul Ramsdale	:
Serial No.: 29/160.108	: PETITION DECISION
Filed: May 3, 2002	:
Attorney Docket No.: RAM001	:

This is a decision on applicant's inquiry regarding Request to Withdraw Notice of Abandonment, which is being treated as a Petition under 37 CFR 1.181 received December 1, 2003, and February 23, 2004, to revive an unavoidably abandoned application.

This application became abandoned for failure to respond to the Office action mailed April 18, 2003, which set a three-month statutory period to respond. As no response was received by July 18, 2003, a Notice of Abandonment was mailed November 26, 2003; this petition followed.

Applicant has submitted copies of the response, which have a Certificate of Mailing date of May 28, 2003; therefore, as applicant responded timely, the Notice of Abandonment was issued in error.

Applicant's petition is **GRANTED.**

The application will be forwarded to the Examiner for consideration of applicant's response.

Should there be any questions with respect to this decision, please contact Sandra Morris; by mail addressed to: Director, Technology Center 3700/2900, P.O. Box 1450, Alexandria, VA 22313-1450; or by telephone at (571) 272-2622.

John Kittle
Director, Technology Center 3700/2900

UNITED STATES PATENT AND TRADEMARK OFFICE

Commissioner for Patents
United States Patent and Trademark Office
P.O. Box 1450
Alexandria, VA 22313-1450
www.uspto.gov

AKIN GUMP STRAUSS HAUER & FELD L.L.P.
ONE COMMERCE SQUARE
2005 MARKET STREET, SUITE 2200
PHILADELPHIA PA 19103

COPY MAILED

AUG 1 0 2007

OFFICE OF PETITIONS

In re Patent No. D504,741	:	
Application No. 29/160,136	:	
Filed: May 6, 2002	:	ON PETITION
Issued: May 3, 2005	:	
Attorney Docket No. 263-78 (LDB/N2-3157)	:	

This is a decision on the petition filed June 6, 2006, which is being treated as a request under 37 CFR 3.81(b)[1] to correct the address of the assignee on the front page of the above-identified patent by way of a Certificate of Correction.

The request is **GRANTED**.

The patent file is being forwarded to the Certificates of Correction Branch for issuance of the requested Certificate of Correction.

Telephone inquiries concerning this decision may be directed to Petitions Examiner Liana Walsh at (571) 272-3206. Inquiries regarding the issuance of a certificate of correction should be directed to the Certificate of Correction Branch at (571) 272-4200.

Liana Walsh for
Frances Hicks
Petitions Examiner
Office of Petitions

[1] *See* MPEP 1309, subsection II; and Official Gazette of June 22, 2004.

UNITED STATES PATENT AND TRADEMARK OFFICE

Commissioner for Patents
United States Patent and Trademark Office
P.O. Box 1450
Alexandria, VA 22313-1450
www.uspto.gov

DEC 1 8 2003

#9

THE HOOVER COMPANY
101 EAST MAPLE STREET
NORTH CANTON, OH 44720

In re Application of:	:
Matthew J. Archer et al.	:
Serial No.: 29/160,352	: PETITION DECISION
Filed: May 8, 2002	:
Attorney Docket No.: 2584	:

This is a decision on applicants' Petition under 37 CFR 1.137(b) to withdraw abandonment filed November 7, 2003.

The petition is **GRANTED**.

This application became abandoned for failure to respond to the Notice of Allowance and Issue Fee Due, mailed November 4, 2002, which set a three month statutory period to submit the Issue Fee and formal drawings. The issue fee was submitted January 20, 2003; however, upon failure to submit formal drawings by February 4, 2003, the application was abandoned. This petition followed.

A grantable petition under 37 CFR 1.137(b), as revised December 1, 1997, requires four items: (1) a petition and petition fee; (2) a complete response if not earlier made; (3) a statement that the entire period of delay in prosecution was unintentional; and (4) a terminal disclaimer and disclaimer fee. A proper Terminal Disclaimer was submitted by facsimile on December 3, 2003.

The terminal disclaimer fee of $110.00 will be charged to applicant's Deposit Account 50-1120, as directed.

The application will be forwarded to Publications to be printed as a patent in due course.

Should there be any questions with regard to this letter please contact Sandra Morris; by letter addressed to the Director, Technology Center 3700/2900, PO Box 1450, Alexandria VA 22313-1450; or by telephone at (703) 305-3102 or by facsimile transmission at (703) 305-5679.

John Kittle
Director, Technology Center 3700/2900

UNITED STATES PATENT AND TRADEMARK OFFICE

Commissioner for Patents
United States Patent and Trademark Office
P.O. Box 1450
Alexandria, VA 22313-1450
www.uspto.gov

NOV 22 2004

SUPERVISOR, PATENT PROSECUTION SERVICES
PIPER RUDNICK LLP
1200 NINETEENTH STREET, N.W.
WASHINGTON DC, 20036-2412

#8

In re Application of	:
Michael Gannon	:
Serial No.: 29/160,574	: PETITION DECISION
Filed: May 13, 2002	:
Attorney Docket No.:	:

This is in response to applicant's Petition to Withhold Abandonment under 37 CFR 1.181, filed September 28, 2004, due to non-receipt of the Office action.

A review of the file history shows that an Office action was mailed July 24, 2003, setting a two month shortened statutory period to respond. As no response was submitted by September 24, 2003, a Notice of Abandonment was mailed on March 26, 2004:

Applicant has stated that he never received a copy of the Office action in the Declaration submitted. Applicant has presented a statement, which is sufficient as he was representing himself at the time. Therefore, the Notice of Abandonment will be rescinded.

Applicant's petition is **GRANTED.**

The application will be promptly forwarded to the Examiner for remailing of the Office action in due course.

As there are no fees associated with Petitions granted under 37 CFR 1.181, the $130.00 Petition fee will be refunded to applicant's Deposit Account 50-1442, as directed.

Should there be any questions with respect to this decision, please contact Sandra Morris; by mail addressed to: Director, Technology Center 3700/2900, P.O. Box 1450, Alexandria, VA 22313-1450; or by telephone at (571) 272-2622.

John Kittle
Director, Technology Center 3700/2900

UNITED STATES PATENT AND TRADEMARK OFFICE

Commissioner for Patents
United States Patent and Trademark Office
P.O. Box 1450
Alexandria, VA 22313-1450
www.uspto.gov

DLA PIPER RUDNICK GRAY CARY US LLP
P. O. BOX 9271
RESTON, VA 20195

COPY MAILED
APR 19 2006
OFFICE OF PETITIONS

In re Application of :
Michael Edward Gannon :
Application No. 29/160,574 :
Filed: May 13, 2002 :
Attorney Docket No. ZON-0002-DESIGN :

ON PETITION

This is a decision on the papers styled, "Petition To Withhold Abandonment," which has been treated as a petition under 37 CFR 1.181, filed February 28, 2006, to withdraw the holding of abandonment.

The petition is **GRANTED**.

This application became abandoned for failure to timely file corrected drawings on or before December 28, 2005 as required by the Notice of Allowability mailed September 28, 2005. Accordingly, this application became abandoned on December 29, 2005. A Notice of Abandonment was mailed on January 30, 2006.

Petitioner asserts that a replacement drawing was timely submitted on December 23, 2005. In support, the petition is accompanied by a copy of applicants' postcard receipt that acknowledges receipt of "Drawings (1 sheet)" on December 23, 2005. A review of the application file indicates the presence of zero (0) sheets of drawings submitted on that date. It is assumed that the one (1) replacement sheet of drawings submitted December 23, 2005 was misplaced by the Office.

Accordingly, the petition is granted and the holding of abandonment is withdrawn.

This application is being forwarded to Technology Center 2900, for review of the replacement sheet of drawings, filed February 28, 2006 (originally filed December 23, 2005).

Telephone inquiries concerning this matter may be directed to the undersigned at (571) 272-3228.

Edward J. Tannouse
Petitions Attorney
Office of Petitions
Office of the Deputy Commissioner
for Patent Examination Policy

UNITED STATES PATENT AND TRADEMARK OFFICE

Commissioner for Patents
United States Patent and Trademark Office
P.O. Box 1450
Alexandria, VA 22313-1450
www.uspto.gov

NOV 18 2004

COLGATE-PALMOLIVE COMPANY
PATENT DEPARTMENT
909 RIVER ROAD
P.O. BOX 1343
PISCATAWAY, NJ 08855-1343

In re Application of	:
Joseph Edward Fattori	:
Serial No.: 29/160,992	: PETITION DECISION
Filed: May 17, 2002	:
Attorney Docket No.: IR 6668-03	:

This is a decision on applicant's Petition under 37 CFR 1.137(b) submitted August 30, 2004, to revive an unintentionally abandoned application.

This application became abandoned for failure to respond to the Notice of Allowance mailed May 21, 2004, which set a three-month statutory period to pay the Issue fee and submit formal drawings. As no reply was submitted by August 23, 2004, the application was abandoned. Applicant then filed this petition.

A grantable petition under 37 CFR 1.137(b), as revised December 1, 1997, requires four items: (1) a petition and petition fee; (2) a complete response if not earlier made; (3) a statement that the entire period of delay in prosecution was unintentional; and (4) a terminal disclaimer and disclaimer fee. The requirement for a terminal disclaimer has been waived, as the petition was submitted before the mailing of the Notice of Abandonment.

Applicant's petition is **GRANTED.**

The Terminal disclaimer fee of $110.00 will be refunded to applicant's Deposit Account 03-2455, as directed.

The application will be forwarded to Publications Branch to be issued into a Patent in due course.

Should there be any questions with respect to this decision, please contact Sandra Morris; by mail addressed to: Director, Technology Center 3700/2900, P.O. Box 1450, Alexandria, VA 22313-1450; or by telephone at (571) 272-2622.

John Kittle
Director, Technology Center 3700/2900

UNITED STATES PATENT AND TRADEMARK OFFICE

COMMISSIONER FOR PATENTS
UNITED STATES PATENT AND TRADEMARK OFFICE
P.O. BOX 1450
ALEXANDRIA, VA 22313-1450
www.uspto.gov

OBLON, SPIVAK, MCCLELLAND, MAIER
& NEUSTADT, P.C.
1940 DUKE STREET
ALEXANDRIA, VA 22314

5/6/05

In re Application of
Hidesato Kizaki
Serial No.: 29/161,289
Filed: May 28, 2002
Attorney Docket No.: 223525US3DES

: PETITION DECISION

This is a decision on applicant's petition to revive patent application under 37 CFR 1.137(b), filed February 14, 2005, to revive an unintentionally abandoned application.

This application became abandoned for failure to timely respond to the Notice of Allowance mailed August 25, 2004. Applicant filed a Request for Continued Examination (RCE) September 13, 2004; applicant was advised that this request was denied February 1, 2005, as RCE's do not apply to design patent applications. This petition followed.

A grantable petition under 37 CFR 1.137(b), as revised December 1, 1997, requires four items: (1) a petition and petition fee; (2) a complete response if not earlier made; (3) a statement that the entire period of delay in prosecution was unintentional; and (4) a terminal disclaimer and disclaimer fee. The filing of a Continued Prosecution Application (CPA) is considered a proper response. Applicant is advised that as the petition was filed before the mailing of the Notice of Abandonment, the requirement for a terminal disclaimer was been waived.

Applicant's petition is **GRANTED**.

The application will be forwarded to be processed as a CPA in due course.

Should there be any questions with respect to this decision, please contact Sandra Morris; by mail addressed to: Director, Technology Center 1700/2900, P.O. Box 1450, Alexandria, VA 22313-1450; or by telephone at (571) 272-2622.

JMStone

Jacqueline Stone
Director, Technology Center 1700/2900

UNITED STATES PATENT AND TRADEMARK OFFICE

Commissioner for Patents
United States Patent and Trademark Office
P.O. Box 1450
Alexandria, VA 22313-1450
www.uspto.gov

Marshall G. MacFarlane
Suite 624
3001 West Big Beaver Road
Troy MI 48084-3107

COPY MAILED

APR 2 0 2006

OFFICE OF PETITIONS

ON PETITION

In re Application of :
Yee :
Application No. 29/161,297 :
Filed: May 25, 2002 :
Attorney Docket No. GFH-100-A :
For: DOLL CARRIER

This is a decision on the petition under 37 CFR 1.137(b), filed on March 10, 2006 (certificate of mailing date March 8, 2006), to revive the above-identified application.

The petition is **DISMISSED**.

Any request for reconsideration of this decision must be submitted within TWO (2) MONTHS from the mail date of this decision. Extensions of time under 37 CFR 1.136(a) are permitted. The reconsideration request should include a cover letter entitled "Renewed Petition under 37 CFR 1.137(b)." This is **not** final agency action within the meaning of 5 U.S.C. § 704.

The application became abandoned for failure to submit the issue fee in response to the Notice of Allowance and Fee(s) Due, mailed September 21, 2005, which set a statutory period for reply of three (3) months. No reply was filed. Accordingly, the application became abandoned on December 22, 2005. A Notice of Abandonment was mailed on February 1, 2006.

A grantable petition under 37 CFR 1.137(b) must be accompanied by: (1) the required reply, unless previously filed; (2) the petition fee as set forth in 37 CFR 1.17(m); (3) a statement that the entire delay in filing the required reply from the due date for the reply until the filing of a grantable petition pursuant to 37 CFR 1.137(b) was unintentional; and (4) any terminal disclaimer (and fee as set forth in 37 CFR 1.20(d)) required by 37 CFR 1.137(c).

The instant petition lacks item (4).

With respect to item (4) above, a terminal disclaimer is missing from the instant petition and is required for all design applications, regardless of the application's filing date. 37 CFR 1.137(d)(1).

Further correspondence with respect to this matter should be addressed as follows:

By mail: Mail Stop PETITION
Commissioner for Patents
Post Office Box 1450
Alexandria, VA 22313-1450

By hand: U.S. Patent and Trademark Office
Customer Service Window, Mail Stop Petition
Randolph Building
401 Dulany Street
Alexandria, VA 22314

By FAX: (571) 273-8300 - ATTN: Office of Petitions

Telephone inquiries should be directed to the undersigned at (571) 272-3230.

E. Shirene Willis

E. Shirene Willis
Senior Petitions Attorney
Office of Petitions

UNITED STATES PATENT AND TRADEMARK OFFICE

COMMISSIONER FOR PATENTS
UNITED STATES PATENT AND TRADEMARK OFFICE
P.O. BOX 1450
ALEXANDRIA, VA 22313-1450
www.uspto.gov

Marshall G. MacFarlane
Suite 624
3001 West Big Beaver Road
Troy MI 48084-3107

COPY MAILED
JUL 14 2006
OFFICE OF PETITIONS

In re Application of :
Yee :
Application No. 29/161,297 : ON PETITION
Filed: May 25, 2002 :
Attorney Docket No. GFH-100-A :
For: DOLL CARRIER

This is a decision on the reconsideration petition under 37 CFR 1.137(b), filed on May 18, 2006 (certificate of mailing date May 16, 2006), to revive the above-identified application.

The application became abandoned for failure to submit the issue fee in response to the Notice of Allowance and Fee(s) Due, mailed September 21, 2005, which set a statutory period for reply of three (3) months. No reply was filed. Accordingly, the application became abandoned on December 22, 2005. A Notice of Abandonment was mailed on February 1, 2006.

Applicant has submitted a proper reply in the form of the issue fee and a completed PTOL-85, an acceptable statement of the unintentional nature of the delay in responding to the September 21, 2005 Notice of Allowance and Fee(s) Due, the petition fee, and a terminal disclaimer and required fee.

The petition under 37 CFR 1.137(b) is **granted**.

After the mailing of this decision, the application will be forwarded to Publishing Division for processing into a patent.

Telephone inquiries should be directed to the undersigned at (571) 272-3230.

Shirene Willis Brantley
Senior Petitions Attorney
Office of Petitions

#6

UNITED STATES PATENT AND TRADEMARK OFFICE

COMMISSIONER FOR PATENTS
UNITED STATES PATENT AND TRADEMARK OFFICE
WASHINGTON, D.C. 20231
www.uspto.gov

Paper No. 6

Ginnie C. Derusseau
Chase Law Firm, L.C.
Suite 130
4400 College Boulevard
Overland Park KS 66211

COPY MAILED

JAN 22 2003

OFFICE OF PETITIONS

In re Application of
Roseman
Application No. 29/161,432
Filed: May 30, 2002
Attorney Docket No. 2972
For: SHOWER DOOR HANDLE

: DECISION ACCORDING STATUS
: UNDER 37 CFR 1.47(b)

This is in response to the petition under 37 CFR 1.47(b), filed September 3, 2002 (certificate of mailing date August 26, 2002).

The petition is granted.

Petitioner has shown that the non-signing inventor, Richard Roseman, has refused to join in the filing of the above-identified application after having been presented with the application papers. Specifically, the declaration/statement of facts of Kevin Beatson establishes that the inventor was mailed the application papers, including the specification, claim, and drawings, but refused to sign the declaration. In addition, petitioner has shown that Westmount Investments Limited (Westmount) has a proprietary interest in the above-identified application with the copy of the contract between Westmount and Mr. Roseman showing that all schematics actualized for the duration of the project between Westmount and Mr. Roseman are the exclusive property of Westmount. Lastly, petitioner has submitted a declaration in compliance with 37 CFR 1.63 and 1.64 and petitioner has shown that such action is necessary to prevent irreparable damage.

This application and papers have been reviewed and found in compliance with 37 CFR 1.47(b). This application is hereby accorded Rule 1.47(b) status.

As provided in Rule 1.47(c), this Office will forward notice of this application's filing to the non-signing inventor at the address given in the petition. Notice of the filing of this application will also be published in the Official Gazette.

After this decision is mailed, the above-identified application will be forwarded to the Office of Initial Patent Examination for further processing.

Telephone inquiries should be directed to the undersigned at (703) 308-6712.

E. Shirene Willis

E. Shirene Willis
Senior Petitions Attorney
Office of Petitions

UNITED STATES PATENT AND TRADEMARK OFFICE

COMMISSIONER FOR PATENTS
UNITED STATES PATENT AND TRADEMARK OFFICE
P.O. BOX 1450
ALEXANDRIA, VA 22313-1450
www.uspto.gov

Paper No. 5

Patrick R. Roche, Esq.
Fay, Sharpe, Fagan, Minnich & McKee, LLP
Seventh Floor
1100 Superior Avenue
Cleveland OH 44114

COPY MAILED

MAY 07 2003

OFFICE OF PETITIONS

In re Application of
John Roy Whitney, Lawrence A. Blaustein,
Patrick W. Brown, and Kadir Abdul Rahman
Chan
Application No. 29/161,471
Filed: May 30, 2002
Attorney Docket No. PRG 2 0023
Title: TOOTHBRUSH

DECISION REFUSING STATUS
UNDER 37 C.F.R. §1.47(a)

This is in response to the petition under 37 C.F.R. 1.47(a) [1], filed December 30, 2002.

The above-identified application was filed on May 30, 2002, identifying John Roy Whitney, Lawrence A. Blaustein, Patrick W. Brown, and Kadir Abdul Rahman Chan as joint inventors. On July 1, 2002, applicant was mailed a "Notice to File Missing Parts of Nonprovisional Application - Filing Date Granted" (Notice), requiring an executed oath or declaration in compliance with 37 C.F.R. §1.63, and a surcharge for its late filing. This Notice set a two-month period for reply.

[1] A grantable petition under 37 C.F.R. §1.47(a) requires:
(1) the petition fee of $130;
(2) a surcharge of either $65 or $130 if the petition is not filed at the time of filing the application, as set forth in 37 CFR § 1.16(e);
(3) a statement of the last known address of the non-signing inventors;
(4) either
a) proof that a copy of the entire application (specification, claims, drawings, and the oath or declaration) was sent or given to the non-signing inventor for review and proof that the non-signing inventor refuses to join in the application or
b) proof that the non-signing inventor cannot be found or reached after diligent effort;
(5) a declaration which complies with 37 CFR §1.63.

In reply, applicant filed the instant petition (and fee), a declaration executed only by each inventor save non-signing inventor Chan, a declaration of facts, and the required surcharge. To make timely this reply, a four-month extension of time was requested.

Petitioner has met requirements (1)-(3) and (5) of 37 C.F.R. §1.47(a) above.

Regarding the fourth requirement above, the petitioner sets forth that the non-signing inventor refuses to sign or cannot be reached[2]. Petitioner cannot have it both ways, in that he cannot allege the address of the non-signing inventor is unknown, and then assert a refusal to sign. He can either claim the person cannot be located, whereby he does not have to establish the inventor received the application papers, or he can allege a refusal to sign, but not both. If he is alleging a refusal to sign, he must establish that a *bona fide* attempt was made to present a copy of the application papers to each non-signing inventor[3] (which would require a known address). Petitioner has not established a refusal, nor has he established that despite diligent effort, the inventor cannot be reached or located.

Assuming that petitioner wishes to assert that the non-signing inventor has refused to sign, the fourth requirement above has not been met in that neither declarant has established that a complete copy of the application papers was sent to the non-signing inventor. Regarding the declarant from the corporation, she does not state what documents were given to "Procter and Gamble employee, J. Chan" for hand delivery. Furthermore, she does not have first-hand knowledge of the underlying event, as she is not the one who attempted to deliver the package. Additionally, the declaration of facts does not reveal the results of this hand-delivery. Regarding the declarant from the law firm, the declarant makes it quite clear that a complete copy of the application was not sent to the non-signing inventor for his review, in that only the declaration and the power of attorney were included in the package.

It follows that one cannot refuse to sign something that one has not been presented with.

On renewed petition, petitioner will first need to have a complete copy of the application sent to the non-signing inventor, and then have one who possesses firsthand knowledge of the underlying event execute a declaration of facts.

Assuming that petitioner wishes to assert that the non-signing inventor cannot be located, the fourth requirement above has not been met in that a sufficient showing of diligence has not been set forth. The petition does not reveal any effort to locate the non-signing inventor. There is no indication that Rule 47 applicant attempted to verify the inventor's addresses or, if appropriate, to determine his forwarding addresses, and to send the application papers to that address for consideration by the inventor[4]. If diligent efforts to obtain a forwarding address or to locate the non-signing inventor by other means such as through E-mail, telephone, or the Internet continue to fail, then applicant will have provided the necessary proof required under 37 C.F.R. §1.47 that the inventor cannot be reached. Details of the efforts to locate the non-signing inventor should

---

2 Added page, heading.
3 See MPEP 409.03(d).
4 See MPEP 409.03(d).

be set forth in an affidavit or declaration of facts by a person with first hand knowledge of the details. Applicant should submit documentary evidence such as the results of an E-mail or Internet search.

For these reasons, the petition is **DISMISSED**.

Any request for reconsideration of this decision must be submitted within **TWO (2) MONTHS** from the mail date of this decision. Extensions of time under 37 CFR 1.136(a) are permitted. The reconsideration request should include a cover letter entitled "Renewed Petition under 37 CFR 1.47(a)."

The reply to this letter may be submitted by mail[5], hand-delivery[6], or facsimile[7].

The application file will be retained in the Office of Petitions for two (2) months.

Telephone inquiries regarding *this decision* should be directed to the undersigned at (703) 305-0011.

Paul Shanoski
Attorney
Office of Petitions
United States Patent and Trademark Office

5 Commissioner for Patents, United States Patent and Trademark Office, P.O. Box 1460, Alexandria, VA 22313-1460. **Note that this is a new address, as the USPTO has changed addresses as of May 1, 2003.**
6 Office of Petitions, 2201 South Clark Place, Crystal Plaza 4, Suite 3C23, Arlington, VA 22202.
7 (703) 308-6916, Attn: Office of Petitions.

UNITED STATES PATENT AND TRADEMARK OFFICE

COMMISSIONER FOR PATENTS
UNITED STATES PATENT AND TRADEMARK OFFICE
P.O. BOX 1450
ALEXANDRIA, VA 22313-1450
WWW.USPTO.GOV

Paper No. 10

Patrick R. Roche, Esq.
Fay, Sharpe, Fagan, Minnich & McKee, LLP
Seventh Floor
1100 Superior Avenue
Cleveland OH 44114

COPY MAILED

NOV 1 3 2003

OFFICE OF PETITIONS

In re Application of
John Roy Whitney, Lawrence A. Blaustein,
Patrick W. Brown, and Kadir Abdul Rahman
Application No. 29/161,471
Filed: May 30, 2002
Attorney Docket No. PRG 2 0023
Title: TOOTHBRUSH

DECISION NOTING JOINDER AND DISMISSING PETITION UNDER 37 C.F.R. §1.47(a) AS MOOT

This is in response to the renewed petition under 37 C.F.R. 1.47(a)[1], filed October 9, 2003.

The petition is **DISMISSED AS MOOT**.

The above-identified application was filed on May 30, 2002, identifying John Roy Whitney, Lawrence A. Blaustein, Patrick W. Brown, and Kadir Abdul Rahman Chan[2] as joint inventors. On July 1, 2002, applicant was mailed a "Notice to File Missing Parts of Nonprovisional Application - Filing Date Granted" (Notice), requiring an executed oath or declaration in compliance with 37 C.F.R. §1.63, and a surcharge for its late filing. This Notice set a two-month period for reply.

---

[1]A grantable petition under 37 C.F.R. §1.47(a) requires:
(1) the petition fee of $130;
(2) a surcharge of either $65 or $130 if the petition is not filed at the time of filing the application;
(3) a statement of the last known address of the non-signing inventors;
(4) proof that a copy of the entire application (specification, claims, drawings, and the oath or declaration) was sent or given to the non-signing inventor for review;
(5) proof that the non-signing inventor refuses to sign the oath or declaration after having been presented with the application papers if the inventor refuses to sign, or proof that diligent efforts have been made to locate the non-signing inventor if he or she cannot be found, and;
(6) a declaration which complies with 37 CFR §1.63.

2 With the renewed petition, petitioner has corrected the fourth inventor's name by deleting "Chan." A corrected filing receipt is enclosed.

In reply, applicant filed the original petition, accompanied by a three-month extension of time to make timely this reply and a declaration executed by each inventor save joint-inventor Kadir Abdul Rahman Chan. This petition was dismissed via a decision mailed on May 7, 2003.

On October 9, 2003, petitioner submitted a request for reconsideration, along with a declaration executed by the previously non-signing joint inventor Kadir Abdul Rahman.

This declaration has been reviewed and found in compliance with 37 §CFR 1.63.

In view of the joinder of the joint inventor, further consideration under 37 CFR §1.47(a) is not necessary and the petition is considered moot. This application does not have any Rule 1.47(a) status and no such status should appear on the file wrapper. This application need not be returned to this Office for further consideration under 37 CFR §1.47(a).

The application file is being returned to the Office of Initial Patent Examination for completion of pre-examination processing, *which will then forward the application to the assignment branch for recordation of the assignment which has been submitted with the instant petition.*

Telephone inquiries regarding *this decision* should be directed to the undersigned at (703) 305-0011.

Paul Shanoski
Attorney
Office of Petitions
United States Patent and Trademark Office

Encl.

UNITED STATES PATENT AND TRADEMARK OFFICE

JUL 0 8 2004

Commissioner for Patents
United States Patent and Trademark Office
P.O. Box 1450
Alexandria, VA 22313-1450
www.uspto.go

DOUGLAS B MCKNIGHT
CALFEE, HALTER & GRISWOLD LLP
SUITE 1400
800 SUPERIOR AVE
CLEVELAND, OH 44114-2688

In re Application of	:
David D. Croft	:
Serial No.: 29/161,578	: PETITION DECISION
Filed: May 31, 2002	:
Attorney Docket No.: 22188/06535	:

This is in response to applicant's Petition to Withdraw Holding of Abandonment submitted May 24, 2004, which is being treated as a Petition under 37 CFR 1.181, based on having responded the Office action.

This petition is **GRANTED.**

This application was held abandoned based on applicant's failure to timely respond to the Office action mailed July 10, 2003, which set a one month shortened statutory period of time to respond. As no response was received by August 11, 2003, a Notice of Abandonment was mailed March 31, 2004. This petition followed.

Applicant has stated that a response was timely submitted by facsimile on August 11, 2003, and has submitted a copy of the response, with a Certificate of Transmission as well as a Communication report, showing that the fax was properly submitted. Therefore, the case is now returned to pending status, and the abandonment is thereby withdrawn.

The application will be promptly forwarded to the Examiner for consideration of applicant's response.

Should there be any questions with respect to this decision, please contact Sandra Morris; by mail addressed to: Director, Technology Center 3700/2900, P.O. Box 1450, Alexandria, VA 22313-1450; or by telephone at (571) 272-2622.

John Kittle
Director, Technology Center 3700/2900

UNITED STATES PATENT AND TRADEMARK OFFICE

Commissioner for Patents
United States Patent and Trademark Office
P.O. Box 1450
Alexandria, VA 22313-1450
www.uspto.gov

FELLERS, SNIDER, BLANKENSHIP, BAILEY & TIPPENS, PC
100 NORTH BROADWAY
SUITE 1700
OKLAHOMA CITY OK 73102-8820

COPY MAILED

NOV 16 2005

OFFICE OF PETITIONS

In re Application of
Ravi K. Sawhney et al. :
Application No. 29/161,915 : ON PETITION
Filed: June 6, 2002 :
Attorney Docket Number: OKC00710 :

This is a decision on the petition, filed November 8, 2005 under 37 CFR 1.137(b)[1], to revive the above identified application.

The petition is **GRANTED**.

This application became abandoned January 19, 2005 for failure to pay the issue fee, publication fee and to make corrections to the drawings. Accordingly, a Notice of Abandonment was mailed March 3, 2005.

All other requirements of 37 CFR 1.137(b), including the filing of a terminal disclaimer, having now been met, this matter is being referred to the Publishing Division for review of the drawings shown as having been received in the PTO on November 8, 2005.

Telephone inquiries concerning this matter may be directed to the undersigned Petitions Attorney at (571) 272-3212.

Patricia Faison-Ball
Senior Petitions Attorney
Office of Petitions

---

[1]Effective December 1, 1997, the provisions of 37 CFR 1.137(b) now provide that where the delay in reply was unintentional, a petition may be filed to revive an abandoned application or a lapsed patent pursuant to 37 CFR 1.137(b). A grantable petition filed under the provisions of 37 CFR 1.137(b) must be accompanied by:

(1) the required reply, unless previously filed. In a nonprovisional application abandoned for failure to prosecute, the required reply may be met by the filing of a continuing application. In an application or patent, abandoned or lapsed for failure to pay the issue fee or any portion thereof, the required reply must be the payment of the issue fee or any outstanding balance thereof.

(2) the petition fee as set forth in 37 CFR 1.17(m);

(3) a statement that the entire delay in filing the required reply from the due date for the reply until the filing of a grantable petition pursuant to 37 CFR 1.137(b) was unintentional. The Commissioner may required additional information where there is a question whether the delay was unintentional; and

(4) any terminal disclaimer (and fee as set forth in 37 CFR 1.20(d)) required pursuant to 37 CFR 1.137(c)).

UNITED STATES PATENT AND TRADEMARK OFFICE

Commissioner for Patents
United States Patent and Trademark Office
P.O. Box 1450
Alexandria, VA 22313-1450
www.uspto.gov

9 2004

MELVIN K. SILVERMAN
500 WEST CYPRESS CREEK ROAD
SUITE 500
FORT LAUDERDALE, FL 33308

#6

In re Application of	:
Darla Beckwith	:
Serial No.: 29/161,960	: PETITION DECISION
Filed: June 7, 2002	:
Attorney Docket No.: 1218.07	:

This is a decision on applicant's Petition under 37 CFR 1.137(b) to withdraw abandonment filed October 22, 2003.

The petition is **GRANTED**.

This application became abandoned for failure to respond to the Notice to File Missing Parts of Nonprovisional Application, mailed July 9, 2002, which set a two-month shortened statutory period to respond. Upon failure to respond by September 9, 2002, the application was abandoned; this petition followed.

A grantable petition under 37 CFR 1.137(b), as revised December 1, 1997, requires four items: (1) a petition and petition fee; (2) a complete response if not earlier made; (3) a statement that the entire period of delay in prosecution was unintentional; and (4) a terminal disclaimer and disclaimer fee.

The application will be forwarded to an Examiner for initial examination in due course.

Should there be any questions with regard to this letter please contact Sandra Morris; by letter addressed to the Director, Technology Center 3700/2900, PO Box 1450, Alexandria VA 22313-1450; or by telephone at (703) 305-3102 or by facsimile transmission at (703) 305-5679.

John Kittle
Director, Technology Center 3700/2900

UNITED STATES PATENT AND TRADEMARK OFFICE

COMMISSIONER FOR PATENTS
UNITED STATES PATENT AND TRADEMARK OFFICE
P.O. BOX 1450
ALEXANDRIA, VA 22313-1450
WWW.USPTO.GOV

Paper No. 6

THOMAS, KAYDEN, HORSTEMEYER & RISLEY, LLP
100 GALLERIA PARKWAY, NW
STE 1750
ATLANTA GA 30339-5948

COPY MAILED

MAY 1 4 2003

OFFICE OF PETITIONS

In re Application of
Elther Chiu
Application No. 29/162,162
Filed: June 10, 2002
Title: LIQUID CRYSTAL DISPLAY

DECISION REFUSING STATUS
UNDER 37 CFR §1.47(b)

This is in response to the petition under 37 CFR §1.47(b), filed January 16, 2003.

The petition under 37 CFR §1.47(b) is **DISMISSED**.

Rule 47 applicant is given TWO MONTHS from the mailing date of this decision to reply, correcting the below-noted deficiencies. Any reply should be entitled "Request for Reconsideration of Petition Under 37 CFR §1.47(b)," and should only address the deficiencies noted below, except that the reply may include an oath or declaration executed by the non-signing inventor. **Failure to respond will result in abandonment of the application.** Any extensions of time will be governed by 37 CFR §1.136(a).

The above-identified application was filed June 10, 2002 without, *inter alia*, an executed oath or declaration and naming Elther Chiu as the sole inventor.

Accordingly, on July 10, 2002, applicants were mailed a "Notice to File Missing Parts of Nonprovisional Application," requiring an executed oath or declaration, and a surcharge for late filing. This Notice set a period for reply of two months, with extensions of time obtainable under §1.136(a).

With the instant petition, petitioner submitted a declaration identifying Elther Chiu as the sole inventor, duly executed by Yu-Chi CHIAO, chairman of HannStar Display Corp, on behalf of the nonsigning inventor and paid the surcharge for late filing. To make the reply timely, the petition was accompanied by a petition for a four month extension of time (and fee). A declaration signed by less than all of the inventors is not a proper reply to the Notice of Missing Parts, except as provided for in §§ 1.42, 1.43, 1.47, or §1.67. Applicant files the instant petition under 37 CFR §1.47(b) because the proper inventive entity is sole inventor, Elther Chiu and that sole inventor Chiu cannot be located.

§1.47(b) provides that:

> Whenever all of the inventors refuse to execute an application for patent, or cannot be found or reached after diligent effort, a person to whom an inventor has assigned or agreed in writing to assign the invention, or who otherwise shows sufficient proprietary interest in the matter justifying such action, may make application for patent on behalf of and as agent for all the inventors. The oath or declaration in such an application must be accompanied by a petition including proof of the pertinent facts, a showing that such action is necessary to preserve the rights of the parties or to prevent irreparable damage, the fee set forth in §1.17(h), and the last known address of all of the inventors. An inventor may subsequently join in the application by filing an oath or declaration complying with §1.63.

Accordingly, a grantable petition under 37 CFR §1.47(b) requires: (1) an acceptable oath or declaration in compliance with 37 C.F.R. §1.63 and 1.64 or 1.175; (2) the rule 47 applicant

must state his or her relationship to the inventor as required by 37 C.F.R. §1.64; (3) proof that the non-signing inventor cannot be found or reached after diligent effort, or refuses to sign the oath or declaration after having been presented with the application papers (specification, claims and drawings); (4) the petition fee; (5) a statement of the last known address of the non-signing inventor; (6) that rule 47 applicant make out a *prima facie* case (I) that the invention has been assigned to him or her or (ii) that the inventor has agreed in writing to assign the invention to him or her or (iii) otherwise demonstrate a proprietary interest in the subject matter of the invention; and (7) rule 47 applicant must prove that the filing of the application is necessary (I) to preserve the rights of the parties or (ii) to prevent irreparable damage. See MPEP §409.03(g).

See 35 U.S.C. §118; 37 C.F.R. §1.47; §§409.03 and 605 of the *Manual of Patent Examining Procedure* (8th ed)(Rev. 1, Aug. 2001)(MPEP).

The instant petition lacks requirements (3), (6) and (7):

Petitioner indicates that a copy of the application and formal papers were mailed to the last known address but that they were returned by the post office as undeliverable and no longer at that address.

The Rule 47 applicant has failed to show that the inventor cannot be reached. Applicant has simply stated that one effort was made to locate the non-signing inventor. This attempt fails to prove diligence in trying to locate Elther Chiu and other attempts to locate the inventor, e.g. through e-mail or the telephone should be employed. If additional efforts prove to be fruitless, then applicant will have to be established that the inventor cannot be reached.

A copy of an assignment purportedly executed by Elther Chiu is provided to comply with requirement (6) of rule 37 CFR 1.47(b) however, the document has not been translated to English and does not therefore serve as proof of a proprietary interest in the subject matter of the invention by Xcellent Design and Products International and thus HannStar Display Corp.

The applicant fails to provide proof of irreparable damage (see MPEP 409.03(g)). A statement by Rule 47 applicant that the filing is necessary to preserve the rights of the parties would be sufficient.

Thus, on renewed petition, to avoid abandonment and attain 1.47 status, applicant must correct the noted deficiencies and provide a 1.47 petition in compliance with all applicable laws.

Further correspondence with respect to this matter should be addressed as follows:

By mail: Mail Stop Petitions
P.O. Box 1450
Alexandria, VA 22313-1450

By FAX: (703) 308-6916
Attn: Office of Petitions

By hand: Office of Petitions
2201 South Clark Place
Crystal Plaza Four, Suite 3C23
Arlington, VA 22202

Telephone inquiries related to this decision may be directed to the undersigned Petitions Attorney at (703) 305-4497.

Patricia Faison Ball

Patricia Faison-Ball
Senior Petitions Attorney
Office of Petitions

UNITED STATES PATENT AND TRADEMARK OFFICE

COMMISSIONER FOR PATENTS
UNITED STATES PATENT AND TRADEMARK OFFICE
P.O. BOX 1450
ALEXANDRIA, VA 22313-1450
www.uspto.gov

Paper No. 10

THOMAS, KAYDEN, HORSTEMEYER & RISLEY, LLP
100 GALLERIA PARKWAY, NW
STE 1750
ATLANTA GA 30339-5948

COPY MAILED
OCT 27 2003
OFFICE OF PETITIONS

In re Application of
Elther Chiu
Application No. 29/162,162
Filed: June 10, 2002
Attorney Docket No. 250804-1040

DECISION NOTING JOINDER OF INVENTOR AND PETITION UNDER 37 CFR 1.47(b) MOOT

Papers filed on October 6, 2003, in reply to "Decision Refusing Status Under 37 CFR 1.47(b)" mailed on May 14, 2003, included, respectively, (a) a three (3) month extension of time for reply to the above-referenced decision and (b) a Declaration signed by the previously nonsigning inventor, Elther Chiu, in compliance with 37 CFR 1.63.

In view of the joinder of the inventor, further consideration under 37 CFR 1.47(b) is moot; this application does not have any rule 1.47(b) status and no such status should appear on the file wrapper. This application need not be returned to this office for any further consideration under 37 CFR 1.47(b).

This application will be forwarded to the Office of Initial Patent Examination for further processing.

Telephone inquiries regarding this decision should be directed to the undersigned Petitions Attorney at (703) 305-4497.

Patricia Faison-Ball

Patricia Faison-Ball
Senior Petitions Attorney
Office of Petitions

UNITED STATES PATENT AND TRADEMARK OFFICE

COMMISSIONER FOR PATENTS
UNITED STATES PATENT AND TRADEMARK OFFICE
WASHINGTON, D.C. 20231
www.uspto.gov

Paper No. 7

John J. Swartz
908 Court Street
Saginaw MI 48602

COPY MAILED

JAN 13 2003

OFFICE OF PETITIONS

In re Application of
Owens
Application No. 29/162,206
Filed: September 25, 2002
Attorney Docket No. N/A
FOR: SADDLE BAG ORNAMENT

DECISION DISMISSING PETITION

This is a decision on the petition entitled, "PETITION FROM REFUSAL TO ESTABLISH FILING DATE," filed September 25, 2002 (certificate of mailing date September 20, 2002), requesting, in effect, withdrawal of the Notice of Incomplete Nonprovisional Application (Notice), mailed July 23, 2002. The petition will be treated under 37 CFR 1.53(e).

The application was deposited on June 10, 2002. On July 23, 2002, the Office of Initial Patent Examination mailed a Notice informing petitioner that the application had not been accorded a filing date because the specification and at least one claim was omitted.

In response to the Notice, petitioner timely filed the present petition. Petitioner requests that the application be accorded a filing date of June 10, 2002 on the basis that a specification and at least one claim were received in the Patent and Trademark Office (PTO) on June 10, 2002. In support, the petition is accompanied by a statement by applicant's attorney's secretary and a copy of applicant's postcard receipt showing an Office of Initial Patent Examination generated barcode showing June 10, 2002 as the date of receipt.

The declaration by counsel's secretary submitted with the petition states without equivocation or doubt that the application included two pages of specification.

The Office file is the official record of what was filed on June 10, 2002. An applicant alleging that a paper was filed in the Office and later misplaced has the burden of proving the allegation by a preponderance of the evidence. In this regard, declarations by individuals involved in the preparation and mailing of the original application reciting their personal recollection or belief of what was contained in the application that they reviewed and/or mailed are no more persuasive of what was actually mailed than the contents of the official record. Such declarations, as in this case, are usually made months after the actual events recited. In this case, the affidavit supplied on September 20, 2002, was made more three (3) months after the application was actually mailed and recounts routine events.

It is for this reason that the Office has established a practice of providing a receipt for papers filed in the Office to any applicant desiring a receipt. The practice, which was long ago established and is well publicized, requires that any paper for which a receipt is desired be filed in the Office with a self-addressed postcard identifying the paper. A postcard receipt which itemizes and properly identifies the papers which are being filed serves as prima facie evidence of receipt in the Office of all the items listed thereon on the date stamped thereon by the Office. See section 503, Manual Of Patent Examining Procedure (MPEP 503).

To reiterate, a properly itemized return postcard constitutes *prima facie* evidence that the items were filed on the date stamped thereon. However, a postcard receipt will not serve as *prima facie* evidence of receipt of any item which is not adequately itemized on the postcard. MPEP 503. The postcard lists, *inter alia*, that the filing included "a divisional application." The Office has no way of verifying what specifically was filed on June 10, 2002.

As stated in MPEP 503, "[M]erely listing on the postcard...'patent application' will not serve as a proper receipt for each of the required components of an application."

The petition is **dismissed**.

Petitioner is entitled to a filing date of September 25, 2002, which is the date that a specification and at least one claim were filed in the Office.

The application is being returned to the Office of Initial Patent Examination for further processing with a filing date of **September 25, 2002**.

Any inquiries pertaining to this matter may be directed to the undersigned at (703) 308-6712.

E. Shirene Willis

E. Shirene Willis
Senior Petitions Attorney
Office of Petitions
Office of the Deputy Commissioner
for Patent Examination Policy

UNITED STATES PATENT AND TRADEMARK OFFICE

COMMISSIONER FOR PATENTS
UNITED STATES PATENT AND TRADEMARK OFFICE
P.O. BOX 1450
ALEXANDRIA, VA 22313-1450
www.uspto.gov

APR 6 2005

RYNDAK & SURI
30 NORTH LASALLE STREET
SUITE 2630
CHICAGO IL 60602

In re Application of
John M. Bretz
Serial No.: 29/162,342
Filed: June 13, 2002
Attorney Docket No.: 1626 C3

: PETITION DECISION

This is in response to applicant's Petition to Withhold Abandonment, which is being treated as a Petition under 37 CFR 1.181, received September 7, 2004, due to non-receipt of the Office action. The delay in acting upon this petition is regretted.

A review of the file history shows that a Notice of Allowance was mailed January 13, 2004, setting a three month statutory period to pay the Issue fee. As no response was submitted by April 13 2004, a Notice of Abandonment was mailed July 30, 2004. This petition followed.

Applicant has stated that the Notice of Allowance was never received, and has submitted sufficient dockets records which prove non-receipt of the Office action. Therefore, the application was abandoned in error.

Applicant's petition is **GRANTED.**

The application will be promptly forwarded to the Examiner for remailing of the Notice of Allowance action in due course.

Should there be any questions with respect to this decision, please contact Sandra Morris; by mail addressed to: Director, Technology Center 1700/2900, P.O. Box 1450, Alexandria, VA 22313-1450; or by telephone at (571) 272-2622.

JMstone

Jacqueline Stone
Director, Technology Center 1700/2900

UNITED STATES PATENT AND TRADEMARK OFFICE

COMMISSIONER FOR PATENTS
UNITED STATES PATENT AND TRADEMARK OFFICE
WASHINGTON, D.C. 20231
www.uspto.gov

Paper No. 6

THOMAS, KAYDEN, HORSTEMEYER &
RISLEY, LLP
100 GALLERIA PARKWAY, NW
STE 1750
ATLANTA, GA 30339-5948

COPY MAILED

SEP 1 0 2003

OFFICE OF PETITIONS

In re Application of:
Elther Chiu
Application No. 29/162,421
Filed: June 14, 2002
Title of Invention: LIQUID CRYSTAL DISPLAY

DECISION REFUSING STATUS UNDER 37 CFR 1.47(b)

This is a decision on the Petition to File Application on Behalf of Inventor who is Unavailable, which is being treated as a petition under 37 CFR 1.47(b), filed January 16, 2003, to allow a person to whom an inventor has assigned or agreed in writing to assign the invention, or who otherwise shows sufficient proprietary interest in the matter justifying such action, to make application on behalf of and as agent for all inventors.

The petition is dismissed.

Any request for reconsideration of this decision must be submitted within TWO (2) MONTHS from the mail date of this decision. Extensions of time under 37 CFR 1.136(a) are permitted. **FAILURE TO RESPOND WILL RESULT IN THE ABANDONMENT OF THIS APPLICATION.** The reconsideration request should include a cover letter entitled "Renewed Petition under 37 CFR 1.47(b)", and be addressed to Petitions Attorney Derek L. Woods.

The above-identified application was filed on June 14, 2002, without a fully executed oath or declaration. A Notice to File Missing Parts of Nonprovisional Application (hereinafter "Notice") was mailed on July 15, 2002, noting, in relevant part, the above deficiency.

In response, Petitioner files the instant petition, wherein Petitioner asserts that efforts to contact the nonsigning inventor have been unfruitful. *Petition at p.2.* The petition is supported by the Declaration of H.L. Sun, wherein effort to contact the nonsigning inventor consisted of mailing the application and formal papers to the last known address of the nonsigning inventor via certified mail. The certified mail was returned as undeliverable because, according to the post office, the nonsigning inventor no longer resided at that address.

Applicable Law

A grantable petition under 37 CFR 1.47(b) requires: (1) proof that the non-signing inventor cannot be reached or refuses to sign the oath or declaration; (2) an acceptable oath or declaration; (3) the petition fee; (4) a statement of the last known address of the non-signing inventor(s); (5) proof of proprietary interest; and (6) proof of irreparable damage. Rule 47(b) applicant lacks items (1), (5) and (6), set forth above.

It is initially noted that 37 CFR 1.47 provides for two separate and distinct circumstances: one where the inventor refuses to join the application after having been presented with the application for signature, and the other where an inventor cannot be found or reached after diligent effort.

As to item (1), based upon the evidence presented, it appears that the nonsigning inventor cannot be found or reached. In order for a petition to be granted on the basis that the inventor cannot be found or reached, Petitioner must demonstrate the exercise of diligent effort. A statement of facts should be submitted that fully describes the exact facts which are relied upon to establish that a *diligent effort* was made to locate the inventor. Emphasis supplied. See, MPEP § 409.03(d). At the very least, a search of telephone directories should be undertaken of the regions where it is suspected the non-signing inventor may reside. Copies of the results of such searches must be referred to in any renewed petition. *It is important that the forthcoming communication contain statements of fact as opposed to conclusions.* (Emphasis supplied).

As to item (5), Rule 47b applicant failed to show or provide proof that HannStar Display Corp. (hereinafter "HannStar") has sufficient proprietary interest in the subject matter to justify the filing of the application, see MPEP 409.03(f)). The copy of the assignment, which purportedly evinces the nonsigning inventor's obligation to assign the invention to Xcellent Design and Products International (hereinafter Xcellent"), is in a language other than English. In order for an instrument to be considered an assignment under the law, the conveyance must necessarily be executed by the assignor. See 35 USCA § 256 n. 136; Ashcroft v. Walworth, C.C. Mass 1872, Holmes 152, Fed. Cas. No. 580. The assignment must be "in writing" in order to be valid or recognized by the PTO. Standard Computing Scale Co. v. Lincoln Scale Corp., 57 F.2d 334, 11 USPQ 246 (W.D. Pa. 1931). That is, the written conveyance must be duly signed. American Tobacco v. Ascot Tobacco Works, 165 F. 207 (C.C. N.Y. 1908). As

noted in University Patents, Inc. v. Kligman, 762 F.Supp. 1212, 1218-19, 20 USPQ2d 1401, 1405 (E.D. Pa. 1991):

> Assignment of patent must be in writing, and writing must show clear and unmistakable intent to transfer ownership and must be executed by patentee or by patentee's assigns or legal representatives(emphasis added).

It is not possible for this Office to verify that the assignment shows clear and unmistakable intent to transfer ownership using the alleged assignment provided. An English language translation of the putative assignment is required.

In the alternative, as noted in MPEP 409.03(f), a Rule 47(b) applicant may establish sufficient proprietary interest by a legal memorandum signed by an attorney familiar with the law of the relevant jurisdiction stating that a court of competent jurisdiction would by the weight of authority in that jurisdiction award the title of the invention to HannStar.

As to item (6), a statement that "the filing of the application is necessary to prevent irreparable damage", is required.

Further correspondence with respect to this matter should be addressed as follows:

By mail: Mail Stop Petitions
Commissioner for Patents
PO Box 1450
Alexandria, VA 22313-1450

By FAX: (703) 308-6916
Attn: Office of Petitions

By hand: Crystal Plaza Four, Suite 3C23
2201 S. Clark Place
Arlington, VA 22202

Telephone inquiries concerning this matter should be directed to the undersigned at (703) 305-0014.

Derek L. Woods
Petitions Attorney
Office of Petitions

UNITED STATES PATENT AND TRADEMARK OFFICE

COMMISSIONER FOR PATENTS
UNITED STATES PATENT AND TRADEMARK OFFICE
P.O. BOX 1450
ALEXANDRIA, VA 22313-1450
www.uspto.gov

Paper No. 9

THOMAS, KAYDEN, HORSTEMEYER &
RISLEY, LLP
100 GALLERIA PARKWAY, NW
STE 1750
ATLANTA, GA 30339-5948

COPY MAILED

OCT 27 2003

OFFICE OF PETITIONS

In re Application of:	:	
Elther Chiu	:	
Application No. 29/162,421	:	
Filed: June 14, 2002	:	DECISION NOTING
Title of Invention: LIQUID	:	JOINDER OF INVENTOR
CRYSTAL DISPLAY	:	

This Decision is in response to the "Response to Decision Refusing Status", filed October 6, 2003, noting the joinder of the inventor.

In view of the joinder of the inventor, further consideration under 37 CFR 1.47 is not necessary and the Reconsideration of Petition is considered to be moot. This application does not have any Rule 1.47 status and no such status should appear on the file wrapper. This application need not be returned to this Office for further consideration under 37 CFR 1.47.

The Declaration/Power of Attorney has been entered and made of record.

This application is being forwarded to Technology Center Art Unit 2911 for examination in due course.

Telephone inquiries related to this decision may be directed to the undersigned at (703) 305-0014.

Derek L. Woods
Petitions Attorney
Office of Petitions

UNITED STATES PATENT AND TRADEMARK OFFICE

COMMISSIONER FOR PATENTS
UNITED STATES PATENT AND TRADEMARK OFFICE
WASHINGTON, D.C. 20231
www.uspto.gov

Paper No. 5

CHARLES V. DEVOE
KOLISCH HARTWELL DICKINSON MCCORMACK & HEUSER
520 S.W. YAMHILL STREET
SUITE 200
PORTLAND, OR 97204

COPY MAILED

NOV 06 2002

OFFICE OF PETITIONS

In re Application of	:	
Sigrid Haugen	:	
Application No. 29/162,433	:	NOTICE
Filed: June 14, 2002	:	
Attorney Docket No. OPA 308	:	

This is a notice regarding your request for acceptance of a fee deficiency submission under 37 CFR 1.28. On September 1, 1998, the Court of Appeals for the Federal Circuit held that 37 CFR 1.28(c) is the sole provision governing the time for correction of the erroneous payment of the issue fee as a small entity. **See DH Technology v. Synergystex International, Inc. 154 F.3d 1333, 47 USPQ2d 1865 (Fed. Cir. Sept. 1, 1998).**

The Office no longer investigates or rejects original or reissue applications under 37 CFR 1.56. **1098 Off. Gaz. Pat. Office 502 (January 3, 1989)**. Therefore, nothing in this Notice is intended to imply that an investigation was done.

Your fee deficiency submission under 37 CFR 1.28 is hereby **ACCEPTED**.

Inquiries related to this communication should be directed to the Office of Petitions Staff at (703) 305-9285.

This file is being forwarded to Technology Center AU 2913.

Wan Layton
Petitions Examiner
Office of Petitions
Office of the Deputy Commissioner
for Patent Examination Policy

UNITED STATES PATENT AND TRADEMARK OFFICE

MAR 0 4 2004

Commissioner for Patents
United States Patent and Trademark Office
P.O. Box 1450
Alexandria, VA 22313-1450
www.uspto.gov

REX RONALD DWARS
1513 HIDDEN HOLLOW LN, N.W.
CEDAR RAPIDS, IA 52405

In re Application of	:
Rex Ronald Dwars	:
Serial No.: 29/162,801	: PETITION DECISION
Filed: August 7, 2002	:
Attorney Docket No.:	:

This is a decision on the petition under 37 CFR 1.137(b), filed October 13, 2003, and February 4, 2004, to revive an unintentionally abandoned application; the delay in acting upon this petition is regretted.

This application became abandoned for failure to fully respond to the Notice of Allowance mailed April 30, 2003; the formal drawings were received June 23, 2003. However, as the Issue fee was not received by July 30, 2003, a Notice of Abandonment was mailed September 27, 2003. This petition followed.

A grantable petition under 37 CFR 1.137(b) requires four items: (1) a petition and petition fee; (2) a complete response if not earlier made; (3) a statement that the entire period of delay in prosecution was unintentional; and (4) a terminal disclaimer and disclaimer fee. As the petition was filed within one month of the mailing of the Notice of Abandonment, the requirement for a terminal disclaimer has been waived.

This petition is **GRANTED**.

This application will be forwarded to Issue Branch for publication as a Patent in due course.

Should there be any questions with respect to this decision, please contact Sandra Morris; by mail addressed to: Director, Technology Center 3700/2900, P.O. Box 1450, Alexandria, VA 22313-1450; or by telephone at (571) 272-2622.

John Kittle
Director, Technology Center 3700/2900

UNITED STATES PATENT AND TRADEMARK OFFICE

JUL 08 2004 (Remail)

Commissioner for Patents
United States Patent and Trademark Office
P.O. Box 1450
Alexandria, VA 22313-1450
www.uspto.gov

REX RONALD DWARS
1513 HIDDEN HOLLOW LN, N.W.
CEDAR RAPIDS, IA 52405

In re Application of	:
Rex Ronald Dwars	:
Serial No.: 29/162,801	: PETITION DECISION
Filed: August 7, 2002	:
Attorney Docket No.:	:

This is a decision on the petition under 37 CFR 1.137(b), filed October 13, 2003, and February 4, 2004, to revive an unintentionally abandoned application; the delay in acting upon this petition is regretted.

This application became abandoned for failure to fully respond to the Notice of Allowance mailed April 30, 2003; the formal drawings were received June 23, 2003. However, as the Issue fee was not received by July 30, 2003, a Notice of Abandonment was mailed September 27, 2003. This petition followed.

A grantable petition under 37 CFR 1.137(b) requires four items: (1) a petition and petition fee; (2) a complete response if not earlier made; (3) a statement that the entire period of delay in prosecution was unintentional; and (4) a terminal disclaimer and disclaimer fee. As the petition was filed within one month of the mailing of the Notice of Abandonment, the requirement for a terminal disclaimer has been waived.

This petition is **GRANTED**.

This application will be forwarded to Issue Branch for publication as a Patent in due course.

Should there be any questions with respect to this decision, please contact Sandra Morris; by mail addressed to: Director, Technology Center 3700/2900, P.O. Box 1450, Alexandria, VA 22313-1450; or by telephone at (571) 272-2622.

John Kittle
Director, Technology Center 3700/2900

UNITED STATES PATENT AND TRADEMARK OFFICE

COMMISSIONER FOR PATENTS
UNITED STATES PATENT AND TRADEMARK OFFICE
P.O. BOX 1450
ALEXANDRIA, VA 22313-1450
www.uspto.gov

Paper No. 13

PERKINS COIE LLP
PATENT-SEA
P.O. BOX1247
SEATTLE WA 98111-1247

COPY MAILED
OCT 2 7 2003
OFFICE OF PETITIONS

In re Application of :
Ralph Bladt et al :
Application No. 29/163,106 : ON PETITION
Filed: June 25, 2002 :
Attorney Docket No. 030048049US1 :

This is a decision on the petition, filed October 14, 2003, under 37 CFR 1.313(c)(3) to withdraw the above-identified application from issue after payment of the issue fee.

The petition is **GRANTED**.

The above-identified application is withdrawn from issue in favor of a continued prosecution application (CPA) under 37 CFR 1.53(d).

Petitioner is advised that the issue fee paid on August 6, 2003 in the parent application is not refundable nor can it be applied towards any new Notice of Allowance which may issue on the CPA filed October 14, 2003.

Telephone inquiries should be directed to the undersigned at (703) 305-8859.

After receipt of the file in the Office of Petitions, the application will be forwarded to Technology Center 2911 for processing of the CPA.

Karen Creasy

Karen Creasy
Petitions Examiner
Office of Petitions
Office of the Deputy Commissioner
for Patent Examination Policy

UNITED STATES PATENT AND TRADEMARK OFFICE

Commissioner for Patents
United States Patent and Trademark Office
P.O. Box 1450
Alexandria, VA 22313-1450
www.uspto.gov

JUN 10 2004

RANDALL B BATEMAN
RANDALL B BATEMAN, PC
10 W 100 SOUTH, SUITE 425
P.O. BOX 1319
SALT LAKE CITY, UT 84110-1319

In re Application of	:
Kent F Beck et al.	:
Serial No.: 29/163,153	: PETITION DECISION
Filed: June 28, 2002	:
Attorney Docket No.: 2281.ZEVX.DS	:

This is a decision on applicants' Petition for Withdrawal of Notice of Abandonment, which is being treated as a petition under 37 CFR 1.181 submitted April 12, 2004, to revive an unavoidably abandoned application.

This application became abandoned for failure to respond to the Office action mailed May 7, 2003, which set a one-month shortened statutory period to respond. As no response was received by June 9, 2003, a Notice of Abandonment was mailed April 6, 2004. Applicant then filed this petition.

Applicant has submitted that the response was timely filed on June 9, 2003, and has submitted copies of the response with a Certificate of Mailing and a Post Card Receipt, showing that the response was timely submitted. While this paper was never matched with the application, it is clear that applicant timely responded to the Office action, and the application was abandoned in error.

Applicants' petition is **GRANTED.**

The application will be promptly forwarded to the Examiner for evaluation of applicant's response in due course.

Should there be any questions with respect to this decision, please contact Sandra Morris; by mail addressed to: Director, Technology Center 3700/2900, P.O. Box 1450, Alexandria, VA 22313-1450; or by telephone at (571) 272-2622.

John Kittle
Director, Technology Center 3700/2900

UNITED STATES PATENT AND TRADEMARK OFFICE

JUL 16 2004

COMMISSIONER FOR PATENTS
UNITED STATES PATENT AND TRADEMARK OFFICE
P.O. BOX 1450
ALEXANDRIA, VA 22313-1450
www.uspto.go

#5

Glen F. Gallinger
7420 Milner Dr., #1000
Colorado Springs CO 80920

In re Application of	
Lamont C. Thomas	:
Serial No.: 29/163306	:
Filed: June 26, 2002	: PETITION DECISION
Attorney Docket No.: TACO2.DES	:
	:

This is a decision on applicant's Petition to Revive Application, which is being treated as a Petition under 37 CFR 1.181 submitted December 8, 2003, to revive an unavoidably abandoned application. The delay in acting upon this petition is regretted; however, the petition was not associated with the application until recently.

This application became abandoned for failure to respond to the Office action mailed April 30, 2003, which set a three-month shortened statutory period to respond. As no response was received by July 30, 2003, a Notice of Abandonment was mailed November 26, 2003. Applicant then filed this petition.

Applicant has submitted that the response was timely filed, as evidenced from the copy of the response, which includes a Certificate of Mailing date of July 3, 2003. This paper was eventually matched with the application; as applicant has on all correspondence used the incorrect serial number, the response was not immediately associated with the application.

Applicant is advised to use Serial No. 29/163,306 on all future correspondence with the Office.

Applicant's petition is **GRANTED.**

The application will be forwarded to the Examiner for evaluation of applicant's response in due course.

Should there be any questions with respect to this decision, please contact Sandra Morris; by mail addressed to: Director, Technology Center 3700/2900, P.O. Box 1450, Alexandria, VA 22313-1450; or by telephone at (571) 272-2622.

John Kittle
Director, Technology Center 3700/2900

UNITED STATES PATENT AND TRADEMARK OFFICE

~~JUN 0 8 2004~~
JUL 0 8 2004

COMMISSIONER FOR PATENTS
UNITED STATES PATENT AND TRADEMARK OFFICE
P.O. BOX 1450
ALEXANDRIA, VA 22313-1450
www.uspto.go

#9

DARRYL C. LITTLE
WARNER LAMBERT COMPANY
201 TABOR ROAD
MORRIS PLAINS, NJ 07950

In re Application of	
Bradford Grant	:
Serial No.: 29/163,632	:
Filed: July 8, 2002	: PETITION DECISION
Attorney Docket No.: PC25130-D1	:
	:

This is a decision on applicants Petition for Withdrawal of Notice of Abandonment filed under 37 CFR 1.181 submitted January 22, 2004, to revive an unavoidably abandoned application. The delay in acting upon this petition is regretted.

This application became abandoned for failure to respond to the Office action mailed February 12, 2003, which set a two-month shortened statutory period to respond. As no response was received by April 12, 2003, a Notice of Abandonment was mailed December 16, 2003. Applicant then filed this petition.

Applicant has submitted that the response and extension of time were timely filed on August 12, 2003, and has submitted copies of the response with a Certificate of Mailing and a Post Card receipt that show that the response was timely filed. While this response was never associated with the application, it is clear that applicant timely responded to the Office action, and the application was abandoned in error.

Applicants' petition is **GRANTED.**

The four month extension of time will be charged to applicant's Deposit Account 23-0458, as directed.

The application will be promptly forwarded to the Examiner for evaluation of applicant's response in due course.

Should there be any questions with respect to this decision, please contact Sandra Morris; by mail addressed to: Director, Technology Center 3700/2900, P.O. Box 1450, Alexandria, VA 22313-1450; or by telephone at (571) 272-2622.

John Kittle
Director, Technology Center 3700/2900

UNITED STATES PATENT AND TRADEMARK OFFICE

Commissioner for Patents
United States Patent and Trademark Office
P.O. Box 1450
Alexandria, VA 22313-1450
www.uspto.gov

DEC 15 2004

WESLEY W. WHITMYER, JR.
ST. ONGE STEWARD JOHNSON & REENS LLC
986 BEDFORD STREET
STAMFORD, CT 06905-5619

In re Application of	:
Stephen Karl-Heinz	:
Serial No.: 29/164,094	: PETITION DECISION
Filed: July 1, 2002	:
Attorney Docket No.: 02581-D0472A www	:

This is in response to applicant's Petition to Withdraw Holding of Abandonment under 37 CFR 1.181, filed October 14, 2004, based on having responded to the Office action.

A review of the file history shows that a Notice of Allowance was mailed May 19, 2004, setting a three month statutory period to pay the Issue fee and submit formal drawings. The issue fee was received August 10, 2004; however, as no formal drawings were submitted by August 19, 2004, a Notice of Abandonment was mailed September 30, 2004. This petition followed.

Applicant has provided a copy of the response, which included a Certificate of Mailing date of the formal drawings of July 26, 2004. Therefore, as the formal drawings were timely submitted to the Office, the application was abandoned in error.

Applicant's petition is **GRANTED.**

The application will be promptly forwarded to Publications Branch to be printed as a patent in due course.

Should there be any questions with respect to this decision, please contact Sandra Morris; by mail addressed to: Director, Technology Center 3700/2900, P.O. Box 1450, Alexandria, VA 22313-1450; or by telephone at (571) 272-2622.

John Kittle
Director, Technology Center 3700/2900

UNITED STATES PATENT AND TRADEMARK OFFICE

Commissioner for Patents
United States Patent and Trademark Office
P.O. Box 1450
Alexandria, VA 22313-1450
www.uspto.gov

ST. ONGE STEWARD JOHNSTON & REENS, LLC
986 BEDFORD STREET
STAMFORD CT 06905-5619

COPY MAILED

SEP 17 2007

OFFICE OF PETITIONS

In re Patent of :
Karl-Heinz Stephan :
Patent No. D505,725 : DECISION ON PETITION
Issued: May 31, 2005 :
Application No. 29/164,094 :
Filed: July 17, 2002
Attorney Docket No. 02581-D0472A WWW

This is a decision on the petition under 37 CFR 1.182, filed, June 5, 2007, to correct the name of inventor "Stephan Karl-Heinz" to – Karl-Heinz Stephan – via a certificate of correction.

The petition is **GRANTED**.

As authorized, the $400 fee for the petition under 37 CFR 1.182 has been assessed to petitioner's deposit account.

Please find enclosed a Corrected Filing Receipt listing the inventor's correct name.

Any questions concerning this matter may be directed to the undersigned at (571) 272-3230.

The matter is being referred to Certificate of Correction Branch for issuance of a certificate of correction listing the inventor's correct name.

Shirene Willis Brantley
Senior Petitions Attorney
Office of Petitions

ATTACHMENT: Corrected Filing Receipt

UNITED STATES PATENT AND TRADEMARK OFFICE

UNITED STATES DEPARTMENT OF COMMERCE
United States Patent and Trademark Office
Address: COMMISSIONER FOR PATENTS
P.O. Box 1450
Alexandria, Virginia 22313-1450
www.uspto.gov

APPL NO.	FILING OR 371(c) DATE	ART UNIT	FIL FEE REC'D	ATTY.DOCKET NO	TOT CLMS	IND CLMS
29/164,094	07/17/2002	2911	460	02581-D0472A WWW	1	1

CONFIRMATION NO. 9466

CORRECTED FILING RECEIPT

OC000000025803003

24126
ST. ONGE STEWARD JOHNSTON & REENS, LLC
986 BEDFORD STREET
STAMFORD, CT 06905-5619

Date Mailed: 09/13/2007

Receipt is acknowledged of this nonprovisional patent application. The application will be taken up for examination in due course. Applicant will be notified as to the results of the examination. Any correspondence concerning the application must include the following identification information: the U.S. APPLICATION NUMBER, FILING DATE, NAME OF APPLICANT, and TITLE OF INVENTION. Fees transmitted by check or draft are subject to collection. Please verify the accuracy of the data presented on this receipt. **If an error is noted on this Filing Receipt, please write to the Office of Initial Patent Examination's Filing Receipt Corrections. Please provide a copy of this Filing Receipt with the changes noted thereon. If you received a "Notice to File Missing Parts" for this application, please submit any corrections to this Filing Receipt with your reply to the Notice. When the USPTO processes the reply to the Notice, the USPTO will generate another Filing Receipt incorporating the requested corrections (if appropriate).**

Applicant(s)

Karl-Heinz Stephan, Wurmlingen, GERMANY;

Power of Attorney: The patent practitioners associated with Customer Number **24126**.

Domestic Priority data as claimed by applicant

Foreign Applications

GERMANY 402 00 383.7 01/18/2002

If Required, Foreign Filing License Granted: 08/08/2002

The country code and number of your priority application, to be used for filing abroad under the Paris Convention, is US29/164,094

Projected Publication Date: None, application is not eligible for pre-grant publication

Non-Publication Request: No

Early Publication Request: No

Title

CIRCULAR PUNCH

Preliminary Class

D24

PROTECTING YOUR INVENTION OUTSIDE THE UNITED STATES

Since the rights granted by a U.S. patent extend only throughout the territory of the United States and have no effect in a foreign country, an inventor who wishes patent protection in another country must apply for a patent in a specific country or in regional patent offices. Applicants may wish to consider the filing of an international application under the Patent Cooperation Treaty (PCT). An international (PCT) application generally has the same effect as a regular national patent application in each PCT-member country. The PCT process **simplifies** the filing of patent applications on the same invention in member countries, but **does not result** in a grant of "an international patent" and does not eliminate the need of applicants to file additional documents and fees in countries where patent protection is desired.

Almost every country has its own patent law, and a person desiring a patent in a particular country must make an application for patent in that country in accordance with its particular laws. Since the laws of many countries differ in various respects from the patent law of the United States, applicants are advised to seek guidance from specific foreign countries to ensure that patent rights are not lost prematurely.

Applicants also are advised that in the case of inventions made in the United States, the Director of the USPTO must issue a license before applicants can apply for a patent in a foreign country. The filing of a U.S. patent application serves as a request for a foreign filing license. The application's filing receipt contains further information and guidance as to the status of applicant's license for foreign filing.

Applicants may wish to consult the USPTO booklet, "General Information Concerning Patents" (specifically, the section entitled "Treaties and Foreign Patents") for more information on timeframes and deadlines for filing foreign patent applications. The guide is available either by contacting the USPTO Contact Center at 800-786-9199, or it can be viewed on the USPTO website at http://www.uspto.gov/web/offices/pac/doc/general/index.html.

For information on preventing theft of your intellectual property (patents, trademarks and copyrights), you may wish to consult the U.S. Government website, http://www.stopfakes.gov. Part of a Department of Commerce initiative, this website includes self-help "toolkits" giving innovators guidance on how to protect intellectual property in specific countries such as China, Korea and Mexico. For questions regarding patent enforcement issues, applicants may call the U.S. Government hotline at 1-866-999-HALT (1-866-999-4158).

LICENSE FOR FOREIGN FILING UNDER
Title 35, United States Code, Section 184
Title 37, Code of Federal Regulations, 5.11 & 5.15

GRANTED

The applicant has been granted a license under 35 U.S.C. 184, if the phrase "IF REQUIRED, FOREIGN FILING LICENSE GRANTED" followed by a date appears on this form. Such licenses are issued in all applications where the conditions for issuance of a license have been met, regardless of whether or not a license may be required as set forth in 37 CFR 5.15. The scope and limitations of this license are set forth in 37 CFR 5.15(a) unless an earlier license has been issued under 37 CFR 5.15(b). The license is subject to revocation upon written notification. The date indicated is the effective date of the license, unless an earlier license of similar scope has been granted under 37 CFR 5.13 or 5.14.

This license is to be retained by the licensee and may be used at any time on or after the effective date thereof unless it is revoked. This license is automatically transferred to any related applications(s) filed under 37 CFR

1.53(d). This license is not retroactive.

The grant of a license does not in any way lessen the responsibility of a licensee for the security of the subject matter as imposed by any Government contract or the provisions of existing laws relating to espionage and the national security or the export of technical data. Licensees should apprise themselves of current regulations especially with respect to certain countries, of other agencies, particularly the Office of Defense Trade Controls, Department of State (with respect to Arms, Munitions and Implements of War (22 CFR 121-128)); the Bureau of Industry and Security, Department of Commerce (15 CFR parts 730-774); the Office of Foreign Assets Control, Department of Treasury (31 CFR Parts 500+) and the Department of Energy.

NOT GRANTED

No license under 35 U.S.C. 184 has been granted at this time, if the phrase "IF REQUIRED, FOREIGN FILING LICENSE GRANTED" DOES NOT appear on this form. Applicant may still petition for a license under 37 CFR 5.12, if a license is desired before the expiration of 6 months from the filing date of the application. If 6 months has lapsed from the filing date of this application and the licensee has not received any indication of a secrecy order under 35 U.S.C. 181, the licensee may foreign file the application pursuant to 37 CFR 5.15(b).

UNITED STATES PATENT AND TRADEMARK OFFICE

AUG 11 2004

COMMISSIONER FOR PATENTS
UNITED STATES PATENT AND TRADEMARK OFFICE
P.O. BOX 1450
ALEXANDRIA, VA 22313-1450
www.uspto.gov

#6

Friedrich Kueffner
Suite 910
317 Madison Avenue
New York NY 10017

In re Application of
Christian Leibeck
Serial No.: 29/164,243
Filed: July 19, 2002
Attorney Docket No.: ST-26

: PETITION DECISION

This is in response to applicant's Petition to Withdraw Holding of Abandonment, which is being treated as a Petition under 37 CFR 1.181 submitted July 1, 2004, based on not having received the Office action.

This petition is **GRANTED.**

This application was held abandoned based on applicant's failure to timely respond to the Office action mailed October 28, 2003, which set a three month shortened statutory period of time to respond. As no response was received by January 28, 2004, a Notice of Abandonment was mailed June 23, 2004. This petition followed.

Applicant has stated that the Office action was never received, and a copy of the mail log confirms this. The case is now returned to pending status, and the abandonment is thereby withdrawn.

The application will be forwarded to the Examiner for remailing of the Office action in due course.

Should there be any questions with respect to this decision, please contact Sandra Morris; by mail addressed to: Director, Technology Center 3700/2900, P.O. Box 1450, Alexandria, VA 22313-1450; or by telephone at (571) 272-2622.

John Kittle
Director, Technology Center 3700/2900

UNITED STATES PATENT AND TRADEMARK OFFICE

COMMISSIONER FOR PATENTS
UNITED STATES PATENT AND TRADEMARK OFFICE
WASHINGTON, D.C. 20231
www.uspto.gov

Paper No. 10

Christopher S. Daly
Daly, Crowley & Mofford, LLP
Suite 101
275 Turnpike Street
Canton MA 02021-2310

COPY MAILED

JAN 16 2004

OFFICE OF PETITIONS

In re Application of
John Caswell
Application No. 29/164,562
Filed: July 26, 2002
Attorney Docket No. MAL-023PUS

DECISION GRANTING PETITION

This is a decision on the petition styled "Petition To Director of Technology Center 2900" filed December 8, 2003, which is being treated as a petition under 37 CFR 1.10(c) requesting that the above-identified application be accorded a filing date of July 26, 2002, instead of the presently accorded date of July 29, 2002.

Petitioners request the earlier filing date on the basis that the application was purportedly deposited with the U. S. Postal Service (USPS) as Express Mail on July 26, 2002, pursuant to 37 CFR 1.10. In support, petitioners provide a copy of the receipt for Express Mail label No. EU286252327US. The same Express Mail receipt number appears on the original Application Transmittal Letter in the file. It is noted that while the "date-in" on the copy of the Express Mail receipt is written as "7-29-02", it also includes a "USPS" receipt stamp dated "JUL 26 2002." In view of the conflicting dates on the Express Mail receipt, a search of the USPTO's USPS Express Mail Information Database was made. The record from the database (copy enclosed) corroborates that the "Express Mail" package in question was accepted on July 26, 2002.

In view of the above, the evidence is convincing that the application was deposited as "Express Mail" with the US Postal Service on July 26, 2002.

The petition is granted.

The application is being forwarded to the Office of Initial Patent Examination (OIPE) for correction of USPTO records to show the filing date as **July 26, 2002** and mailing a corrected filing receipt.

Telephone inquires related to this decision should be directed to the undersigned at (703) 305-9220. Telephone inquiries related to OIPE processing should be directed Valerie Kinard on (703) 305-3974.

Sherry D. Brinkley
Petitions Examiner
Office of Petitions
Office of the Deputy Commissioner
for Patent Examination Policy

Enclosure: Copy of USPTO's USPS Express Mail Record

UNITED STATES PATENT AND TRADEMARK OFFICE

COMMISSIONER FOR PATENTS
UNITED STATES PATENT AND TRADEMARK OFFICE
P.O. BOX 1450
ALEXANDRIA, VA 22313-1450
www.uspto.gov

DORSEY & WHITNEY, LLP
INTELLECTUAL PROPERTY DEPARTMENT
370 SEVENTEENTH STREET
SUITE 4700
DENVER, CO 80202-5647

COPY MAILED

OCT 18 2006

OFFICE OF PETITIONS

In re Application of	:	
Douglas A. Crawford, et al.	:	
Application No. 29/164,826	:	ON PETITION
Filed: July 31, 2002	:	
Attorney Docket No. 11735.00	:	

This is a decision on the petition, filed October 16, 2006, under 37 CFR 1.313(c)(3) to withdraw the above-identified application from issue after payment of the issue fee. See 1233 *Official Gazette* 54 (April 11, 2000).

The petition is **GRANTED**.

Petitioner requests that the application be withdrawn from issue in favor of a continued prosecution application (CPA) under 37 CFR 1.53(d).

The application is withdrawn from issue.

Petitioner is advised that the issue fee paid on August 28, 2006, in the above-identified application, in the parent application is not refundable nor can it be applied towards any new Notice of Allowance which may issue on the CPA filed October 16, 2006.

Telephone inquiries should be directed to the undersigned at (571) 272-3204.

The application is being referred to Technology Center AU 2915 for processing of the CPA.

Sherry D. Brinkley
Petitions Examiner
Office of Petitions

SPE: G. Watson

SPE RESPONSE FOR CERTIFICATE OF CORRECTION

Paper No.: _____

DATE : 5/9/07

TO SPE OF : ART UNIT 2915

SUBJECT : Request for Certificate of Correction for Appl. No.: 08/164,826 Patent No.: D540405

Please respond to this request for a certificate of correction within 7 days.

Please review the requested changes/corrections as shown in the **COCIN** document(s) in the IFW application image. No new matter should be introduced, nor should the scope or meaning of the claims be changed.

Please complete the response (see below) and forward the completed response to scanning using document code **COCX**.

Lamonte M. Newsome
Certificates of Correction Branch
703-308-9390 ext. 112

Thank You For Your Assistance

The request for issuing the above-identified correction(s) is hereby:

Note your decision on the appropriate box.

- ☑ **Approved** — All changes apply.
- ☐ **Approved in Part** — Specify below which changes **do not** apply.
- ☐ **Denied** — State the reasons for denial below.

Comments: _____

Gary D. Watson — SPE

2915 — Art Unit

UNITED STATES PATENT AND TRADEMARK OFFICE

SEP 08 2004

Commissioner for Patents
United States Patent and Trademark Office
P.O. Box 1450
Alexandria, VA 22313-1450
www.uspto.gov

DINSMORE & SHOHL
ONE DAYTON CENTRE
ONE S. MAIN STREET, SUITE 500
DAYTON, OH 45402-2023

In re Application of	:
Gene J. Kuzma et al.	:
Serial No.: 29/164,926	: PETITION DECISION
Filed: August 2, 2002	:
Attorney Docket No.: 31539.041	:

This is a decision on applicant's Petition to Withdraw Holding of Abandonment under 37 CFR 1.181 submitted August 12, 2004, to revive an unavoidably abandoned application.

This application became abandoned for failure to completely respond to the Notice of Allowance and Issue fee due mailed October 2, 2003, which set a three-month statutory period to submit the Issue Fee and formal drawings. As no response was received by January 2, 2004, a Notice of Abandonment was mailed July 30, 2004. Applicant then filed this petition.

Applicant has submitted that the issue fee was timely paid, as evidenced by the copy of the Issue fee transmittal, which has a Certificate of Mailing date of December 19, 2003. However, as no formal drawings were submitted, the application is still abandoned.

A petition under CFR 1.137(b) seeking revival of the above-identified application should be submitted to revive this application. A petition under 37 CFR 1.137(b) for revival of an application abandoned unintentionally must be filed promptly after applicant becomes aware of the abandonment of the application. The petition must be accompanied by (1) a verified statement that the application was abandoned unintentionally for the entire period of abandonment, (2) by the petition fee of $665.00 for a small entity, (3) by a full and complete response to the last Office action and (4) by a terminal disclaimer and fee therefor of $55.00. If the application has been abandoned for more than one year an explanation of the delay in filing the petition is also required.

Applicant's petition is **DISMISSED** without prejudice to the filing of a renewed petition.

Any renewed petition must be filed with **TWO MONTHS** of the mailing date of this decision in order to be considered timely.

Should there be any questions with respect to this decision, please contact Sandra Morris; by mail addressed to: Director, Technology Center 3700/2900, P.O. Box 1450, Alexandria, VA 22313-1450; or by telephone at (571) 272-2622.

John Kittle
Director, Technology Center 3700/2900

UNITED STATES PATENT AND TRADEMARK OFFICE

Commissioner for Patents
United States Patent and Trademark Office
P.O. Box 1450
Alexandria, VA 22313-1450
www.uspto.gov

6/27/05

DINSMORE & SHOHL
ONE DAYTON CENTRE
ONE S. MAIN STREET, SUITE 500
DAYTON, OH 45402-2023

In re Application of
Gene J. Kuzma et al.
Serial No.: 29/164,926
Filed: August 2, 2002
Attorney Docket No.: 31539.041

: PETITION DECISION

This is a decision on applicant's renewed Petition to Withdraw Holding of Abandonment under 37 CFR 1.181 submitted October 21, 2004, to revive an unavoidably abandoned application. The delay in acting upon this petition is regretted.

This petition is **GRANTED.**

This application became abandoned for failure to completely respond to the Notice of Allowance and Issue fee due mailed October 2, 2003, which set a three-month statutory period to submit the Issue Fee and formal drawings. As no response was received by January 2, 2004, a Notice of Abandonment was mailed July 30, 2004. Applicant then filed a petition August 12, 2004, which was dismissed, as no formal drawings had been submitted. It was adequately shown in the previously submitted petition that in fact the issue fee had been timely paid.

Applicant has stated that the response to the Notice of Allowance was timely and complete, as formal drawings were not necessary. Applicant is advised that the requirement for formal drawings in the Notice of Allowance was made by the Examiner, and only the Examiner can withdraw this; not issue branch nor the petitions examiner. Therefore, if applicant did not agree with the requirement, applicant should have contacted the Examiner to request withdrawal of the drawing objection to avoid abandonment of the application.

However, due to applicant's evidence, which was presented to the Examiner, the requirement for formal drawings has been withdrawn.

The application will be forwarded to Publication Division for printing as a patent in due course.

Should there be any questions with respect to this decision, please contact Sandra Morris; by mail addressed to: Director, Technology Center 1700/2900, P.O. Box 1450, Alexandria, VA 22313-1450; or by telephone at (571) 272-2622 or by facsimile transmission at (571) 273-2622.

Jacqueline Stone
Director, Technology Center 1700/2900

Approved
Jacqueline M. Stone
Jacqueline M. Stone, Director
Technology Center 1700

UNITED STATES PATENT AND TRADEMARK OFFICE

NOV 22 2004

Commissioner for Patents
United States Patent and Trademark Office
P.O. Box 1450
Alexandria, VA 22313-1450
www.uspto.gov

DORSEY & WHITNEY LLP
INTELLECTUAL PROPERTY DEPARTMENT
370 SEVENTEENTH STREET
SUITE 4700
DENVER, CO 80202-5647

In re Application of	:
Douglas A. Crawford et al.	:
Serial No.: 29/164,931	: PETITION DECISION
Filed: July 31, 2002	:
Attorney Docket No.: 11736.00	:

This is a decision regarding applicant's telephone interview with Supervisory Patent Examiner Alan Douglas, which is being treated as a Petition under 37 CFR 1.181, to revive an unavoidably abandoned application.

This application became abandoned for failure to respond to the Notice of Allowance and Issue Fee due mailed November 17, 2003, which set a three-month statutory period to respond. As no response was received by February 17, 2004, a Notice of Abandonment was mailed August 3, 2004. Applicant then filed this petition.

Applicant has submitted that a response in the form of a Continued Prosecution Application was timely filed on February 11, 2004. This paper was matched with the application; it is therefore clear that the application was abandoned in error.

Applicant's petition is **GRANTED.**

The application will be promptly forwarded to be processed as a CPA in due course.

Should there be any questions with respect to this decision, please contact Sandra Morris; by mail addressed to: Director, Technology Center 3700/2900, P.O. Box 1450, Alexandria, VA 22313-1450; or by telephone at (571) 272-2622.

John Kittle
Director, Technology Center 3700/2900

UNITED STATES PATENT AND TRADEMARK OFFICE

NOV 20 2003

Commissioner for Patents
United Stat s Patent and Trademark Office
P.O. Box 1450
Alexandria, VA 22313-1450
www.uspto.gov

#6

DANIEL MARCHESE
23091 ANTONIO PKWY #335
RANCH SANTA MARGARITA, CA 92688

In re Application of	:
Daniel Shea Marchese et al.	:
Serial No.: 29/165,105	: PETITION DECISION
Filed: August 5, 2002	:
Attorney Docket No.:	:

This is a decision on the Petition to Revive under 37 CFR 1.137(b), filed September 3, 2003, to revive an unintentionally abandoned application. A Petition under 37 CFR 1.137(a) was also filed April 30, 2003, but is considered moot as it was not the proper petition to submit in this application.

Applicants' petition is **GRANTED**.

This application became abandoned for failure to respond to the Notice to File Missing Parts of Nonprovisinal Application mailed August 27, 2002, which set a two month statutory period to pay the filing fees. Upon failure to respond by October 27, 2002, the application was abandoned. Applicant filed a Petition This petition followed.

The fees were submitted April 30, 2003, and a proper Petition under 37 CFR 1.137(b) was filed September 3, 2003.

The application was acted on prior to entry of this Petition Decision. Therefore, the application will be forwarded to the Examiner to await applicants' response to the Office action of September 29, 2003.

As the Petition under 37 CFR 1.137(a) was not considered, the $55.00 filing fee for this petition will be refunded to applicant by Treasury Check in due course.

Should there be any questions with regard to this letter please contact Sandra Morris; by letter addressed to the Director, Technology Center 3700/2900, PO Box 1450, Alexandria VA 22313-1450; or by telephone at (703) 305-3102 or by facsimile transmission at (703) 305-5679.

John Kittle
Director, Technology Center 3700/2900

SPE RESPONSE FOR CERTIFICATE OF CORRECTION

Paper No.: _____

DATE : 12/28/07

TO SPE OF : **Technology Center** 2911

29/1655269

SUBJECT : Request for Certificate of Correction on Patent No.: D494662S

A response is requested with respect to the accompanying request for a certificate of correction.

Please complete this form and return with file, within 7 days to:
Palm location **7580, Certificates of Correction Branch – South Tower – 9A22**
If response is for an IFW, **return to employee (named below) via PUBSCofC Team in MADRAS.**
With respect to the change(s) requested, correcting Office and/or Applicant's errors, should the patent read as shown in the certificate of correction (COCIN)? No new matter should be introduced, nor should the scope or meaning of the claims be changed.

Thank You For Your Assistance

Elisha Evans
Certificates of Correction Branch
Tel. No. 703-308-9390 EXT 110

The request for issuing the above-identified correction(s) is hereby:
Note your decision on the appropriate box.

- [x] **Approved** — **All** changes apply.
- [ ] **Approved in Part** — Specify below which changes **do not** apply.
- [ ] **Denied** — State the reasons for denial below.

Comments:

/Robin Webster/
Primary Examiner
Art Unit 2911

CATHRON C. BROOKS
SUPERVISORY PATENT EXAMINER
SPE

2911
Art Unit

PTOL-306 (REV. 7/03)

U.S. DEPARTMENT OF COMMERCE Patent and Trademark Office

NOTICE RE: CERTIFICATES OF CORRECTION

DATE : 5/23/05 **Paper No.:** _____

TO : **Supervisor, Art Unit** 2913

SUBJECT : Certificate of Correction Request in Patent No.: 29/165,683 D490715S

A response to the following question is requested with respect to the accompanying request for a certificate of correction.

With respect to the change(s) requested, correcting Office and/or Applicant's errors, should the patent read as shown in the certificate of correction? No new matter should be introduced, nor should the scope or meaning of the claims be changed.

H. Cieder

PLEASE COMPLETE THIS FORM AND RETURN WITH FILE, WITHIN 7 DAYS, TO CERTIFICATES OF CORRECTION BRANCH - PK 3-915/922 PALM LOCATION 7580 - TEL. N0. 305-8309

THANK YOU FOR YOUR ASSISTANCE!

Note your decision by placing a check mark in the appropriate box below, indicating whether all changes requested in the Request for Certificate of Correction should be applied. Please specify which changes should not be applied and indicate the reason(s) for denial, in the "Comments" section below.

☒ **YES** ☐ **NO**

☐ **Comments:** _____

CARON D. VEYNAR
SUPERVISORY PATENT EXAMINER

Caron D Veynar
Supervisor

2913
Art Unit

UNITED STATES PATENT AND TRADEMARK OFFICE

JUN 10 2004

Commissioner for Patents
United States Patent and Trademark Office
P.O. Box 1450
Alexandria, VA 22313-1450
www.uspto.gov

#8

DENTON L ANDERSON
SHELDON & MAK
225 SOUTH LAKE AVENUE
9TH FLOOR
PASADENA, CA 91101

In re Application of	:
Jean Servaux	:
Serial No.: 29/165,810	: PETITION DECISION
Filed: August 15, 2002	:
Attorney Docket No.: 14178	:

This is a decision on applicant's petition to revive patent application under 37 CFR 1.137(b), originally filed June 17, 2003, and again on January 8, 2004, to revive an unintentionally abandoned application. The delay in acting upon this petition is regretted; however, the first copy of the petition was not matched with the application.

This application became abandoned for failure to completely and timely respond to the Notice to File Missing Parts of Nonprovisional Application, mailed September 5, 2002, which gave applicant two months to file an oath or declaration, and the surcharge. As no response was received, the application was abandoned. This petition followed.

A grantable petition under 37 CFR 1.137(b), as revised December 1, 1997, requires four items: (1) a petition and petition fee; (2) a complete response if not earlier made; (3) a statement that the entire period of delay in prosecution was unintentional; and (4) a terminal disclaimer and disclaimer fee. The requirement for a terminal disclaimer (4) has been waived, as applicant filed the petition before receiving a Notice of Abandonment. Applicant's statement (3) that the delay in response was unintentional is understood to mean that the entire period from the due date for the required reply until the filing of a grantable petition was unintentional.

Applicant's petition is **GRANTED**.

The application will be forwarded to an Examiner for initial examination in due course.

Should there be any questions with respect to this decision, please contact Sandra Morris; by mail addressed to: Director, Technology Center 3700/2900, P.O. Box 1450, Alexandria, VA 22313-1450; or by telephone at (571) 272-2622.

John Kittle
Director, Technology Center 3700/2900

UNITED STATES PATENT AND TRADEMARK OFFICE

AUG 3 1 2004

COMMISSIONER FOR PATENTS
UNITED STATES PATENT AND TRADEMARK OFFICE
P.O. BOX 1450
ALEXANDRIA, VA 22313-1450
www.uspto.go

THE PROCTER & GAMBLE COMPANY
INTELLECTUAL PROPERTY DIVISION
WINTON HILL TECHNICAL CENTER - BOX 161
6110 CENTER HILL AVENUE
CINCINNATI OH 45224

#1

In re Application of
Toru Sumiyoshi et al.
Serial No.: 29/166,326
Filed: August 26, 2002
Attorney Docket No.: AD-111

: PETITION DECISION

This is a decision on applicant's Petition for Withdrawal of Notice of Abandonment submitted July 15, 2004, which is being treated as a petition under 37 CFR 1.181, to revive an unavoidably abandoned application.

This application became abandoned for failure to respond to the Notice to File Missing Parts mailed September 18, 2002, which set a two-month period to respond. As no response was received by November 19, 2002, a Notice of Abandonment was mailed September 9, 2003. Applicant then filed this petition.

Applicant has submitted that the response was timely filed on September 27, 2002, and has submitted copies of the response with a Certificate of Transmission that shows that the response was timely filed. Applicant is advised that this paper was not associated with the correct application, as applicant used the incorrect serial number (29/166,328). The response was finally associated with the application. However, as applicant did timely respond, the application will be returned to pending status.

Applicant's petition is **GRANTED.**

The application will be forwarded to an Examiner for initial examination in due course.

Should there be any questions with respect to this decision, please contact Sandra Morris; by mail addressed to: Director, Technology Center 3700/2900, P.O. Box 1450, Alexandria, VA 22313-1450; or by telephone at (571) 272-2622.

John Kittle
Director, Technology Center 3700/2900

UNITED STATES PATENT AND TRADEMARK OFFICE

Commissioner for Patents
United States Patent and Trademark Office
P.O. Box 1450
Alexandria, VA 22313-1450
www.uspto.gov

JOHN S. PRATT, ESQ
KILPATRICK STOCKTON, LLP
1100 PEACHTREE STREET
ATLANTA, GA 30309

In re Patent No. D503765

Issue Date: April 5, 2005

Application No. 29/166,337

Filed: August 26, 2002

Attorney Docket No. 34901/277703

COPY MAILED

SEP 15 2006

OFFICE OF PETITIONS

ON PETITION

This is a decision on the petition filed January 14, 2006, which is being treated as a request under 37 CFR 3.81(b)[1] to correct the assignee on the front page of the above-identified patent by way of Certificate of Correction.

The request is **granted**.

Telephone inquiries concerning this matter may be directed to the undersigned at (571) 272-3222. Any questions concerning the issuance of the Certificate of Correction should be directed to the Certificate of Correction Branch at (703) 305-8309.

The file is being forwarded to the Certificate of Correction Branch for issuance of the requested Certificate of Correction.

Kenya A. McLaughlin
Petitions Attorney
Office of Petitions

[1] See *Official Gazette* of June 22, 2004.

UNITED STATES PATENT AND TRADEMARK OFFICE

Commissioner for Patents
United States Patent and Trademark Office
P.O. Box 1450
Alexandria, VA 22313-1450
www.uspto.gov

HARNESS DICKEY & PIERCE
SUITE 400
7700 BONHOMME AVENUE
ST. LOUIS, MO 63105

COPY MAILED

MAY 18 2004

OFFICE OF PETITIONS

In re Application of :
Christopher J. Conway et al :
Application No. 29/166,888 : NOTICE
Filed: September 5, 2002 :
Attorney Docket No. 9858-000324 :

This is a notice regarding your request for acceptance of a fee deficiency submission under 37 CFR 1.28. On September 1, 1998, the Court of Appeals for the Federal Circuit held that 37 CFR 1.28(c) is the sole provision governing the time for correction of the erroneous payment of the issue fee as a small entity. **See DH Technology v. Synergystex International, Inc. 154 F.3d 1333, 47 USPQ2d 1865 (Fed. Cir. Sept. 1, 1998).**

The Office no longer investigates or rejects original or reissue applications under 37 CFR 1.56. **1098 Off. Gaz. Pat. Office 502 (January 3, 1989).** Therefore, nothing in this Notice is intended to imply that an investigation was done.

Your fee deficiency submission under 37 CFR 1.28 is hereby **ACCEPTED.**

Inquiries related to this communication should be directed to the Office of Petitions Staff at (703) 305-9285.

This file is being forwarded to Technology Center AU 2911.

Wan Laymon
Petitions Examiner
Office of Petitions
Office of the Deputy Commissioner
for Patent Examination Policy

UNITED STATES PATENT AND TRADEMARK OFFICE

COMMISSIONER FOR PATENTS
UNITED STATES PATENT AND TRADEMARK OFFICE
P.O. BOX 1450
ALEXANDRIA, VA 22313-1450
www.uspto.gov

HARNESS, DICKEY & PIERCE, PLC
SUITE 400
7700 BONHOMME AVENUE
SAINT LOUIS, MO 63105

In re Application of
Kevin Horner-Richardson
Serial No.: 29/166,921
Filed: September 4, 2002
Attorney Docket No.: 9858-00157

: PETITION DECISION

This is a decision on applicant's petition to revive patent application under 37 CFR 1.137(b), received December 8, 2004, to revive an unintentionally abandoned application.

This application became abandoned for failure to fully respond to the Office action mailed October 8, 2003, which set a three-month statutory period to overcome the final rejection. A response was received January 7, 2004, which did not overcome the rejection; an Advisory action was mailed to applicant March 9, 2004. Applicant responded on June 9, 2004, however, the response was not timely filed. As the rejection was not overcome by January 8, 2004, a Notice of Abandonment was mailed to applicant November 26, 2004. Applicant then filed this petition.

A grantable petition for a design application under 37 CFR 1.137(b), as revised December 1, 1997, requires four items: (1) a petition and petition fee; (2) a complete response if not earlier made; (3) a statement that the entire period of delay in prosecution was unintentional; and (4) a terminal disclaimer and disclaimer fee. Applicant's new drawings (2) have overcome the final rejection. The requirement for filing a terminal disclaimer (4) has been waived, as the Petition was filed within one month of the mailing of the Notice of Abandonment.

Applicant's petition is **GRANTED**.

The application will be forwarded to the Examiner for evaluation of applicant's response in due course.

Should there be any questions with respect to this decision, please contact Sandra Morris; by mail addressed to: Director, Technology Center 1700/2900, P.O. Box 1450, Alexandria, VA 22313-1450; or by telephone at (571) 272-2622 or by facsimile transmission at (571) 273-2622.

JMStone

Jacqueline Stone
Director, Technology Center 1700/2900

UNITED STATES PATENT AND TRADEMARK OFFICE

COMMISSIONER FOR PATENTS
UNITED STATES PATENT AND TRADEMARK OFFICE
P.O. BOX 1450
ALEXANDRIA, VA 22313-1450
www.uspto.gov

Paper No. 19

Finnegan, Henderson, Farabow,
Garrett & Dunner, L.L.P.
1300 I Street, N.W.
Washington, DC 20005-3315

COPY MAILED

OCT 2 9 2004

OFFICE OF PETITIONS

In re Application of :
Miles Hawley, et al. :
Application No. 29/166,999 :
Filed: September 9, 2002 :
Attorney Docket No. 02481.1811 :

ON PETITION

This is a decision on the petition under 37 CFR 1.137(a), or in the alternative under 37 CFR 1.137(b), filed October 21, 2004, to revive the above-identified application. This is also a decision on the petition under 37 CFR 1.313(c) filed October 21, 2004.

The petition under 37 CFR 1.137(a) is **DISMISSED.**

The petition under 37 CFR 1.137(b) is **GRANTED.**

The petition under 37 CFR 1.313(c) is **GRANTED.**

A grantable petition under 37 CFR 1.137(a) must be accompanied by: (1) the required reply, unless previously filed;[1] (2) the petition fee as set forth in 37 CFR 1.17(l); (3) a showing to the satisfaction of the Commissioner that the entire delay in filing the required reply from the due date for the reply until the filing of a grantable petition pursuant to 37 CFR 1.137(a) was unavoidable; and (4) any terminal disclaimer (and fee as set forth in 37 CFR 1.20(d)) required pursuant to 37 CFR 1.137(c). The instant petition lacks item (3).

A review of the record discloses that a Notice of Allowance/Allowability was mailed to applicant on July 14, 2003, setting a three-month statutory period within which to submit the issue fee. On October 14, 2003, a Request for Continued Examination (RCE) was filed. While the RCE was filed within the period set for paying the issue fee, it is not permissible to file a RCE on a design application.

[1] In a nonprovisional application abandoned for failure to prosecute, the required reply may be met by the filing of a continuing application. In an application or patent, abandoned or lapsed for failure to pay the issue fee or any portion thereof, the required reply must be the payment of the issue fee or any outstanding balance thereof.

Accordingly, the application became abandoned on October 15, 2003 for a failure to pay the issue fee. On November 3, 2003, a Notice of Improper RCE was mailed. In response, on November 20, 2003, petitioner filed a Continuing Patent Application (CPA). However, the CPA was an improper filing under 37 CFR 1.53(d) since it was filed after the date of abandonment of the prior application. On October 1, 2004, a Notice of Abandonment was mailed. In response, the present petition was filed.

Petitioner argues that the delay in paying the issue fee was unavoidable. Petitioner explains that since the Notice of Improper RCE, as well as the Notice of Abandonment, was not received until after the response period had passed, applicant "could not and did not pay the issue fee by the due date."

35 U.S.C. 151 in pertinent part states:

> "The notice shall specify a sum, constituting the issue fee or a portion thereof, which shall be paid within three months thereafter.
>
> Upon payment of this sum the patent shall issue but if payment is not timely made, the application shall be regarded as abandoned."

37 CFR 1.316 states:

> "If the issue fee is not paid within three months of the date of the notice of allowance, the application will be regarded as abandoned."

MPEP 203.07 in pertinent part states:

> "An allowed application in which the Issue Fee is not paid within 3 months after the Notice of Allowance in accordance with 35 U.S.C. 151 is abandoned for that reason."

Based on petitioner's statement, it seems that the issue fee was not paid because of an error in judgment as to the steps necessary to continue prosecution of this application, which does not constitute unavoidable delay. MPEP 711.03(c) in pertinent part states:

> "Finally, a delay caused by an applicant's lack of knowledge or improper application of the patent statute, rules of practice or the MPEP is not rendered 'unavoidable' due to:
>
> > (A) the applicant's reliance upon oral advice from USPTO employees; or
> >
> > (B) **the USPTO's failure to advise the applicant of any deficiency in sufficient time to permit the applicant to take corrective action."** (Emphasis supplied)

In view of the above, the showing of record is not sufficient to establish to the satisfaction of the Commissioner that the delay was unavoidable within the meaning of 35 U.S.C. § 151 and 37 CFR

1.137(a). Specifically, an application is "unavoidably" abandoned only where petitioner, or counsel for petitioner, takes all action necessary for a proper response to the outstanding Office action, but through the intervention of unforeseen circumstances, such as failure of mail, telegraph, telefacsimile, or the negligence of otherwise reliable employees, the response is not timely received in the Office. Ex parte Pratt, 1887 Dec. Comm'r Pat. 31 (Comm'r Pat. 1887). Petitioner did not take the appropriate action necessary to prevent the application from becoming abandoned.

Nevertheless, petitioner has demonstrated to the Office that the delay in paying the issue fee was unintentional.

The unavoidable petition fee of $110 and the unintentional petition fee of $1370 have been charged to petitioner's deposit account as authorized.

Petitioner is being refunded $1,110 for the $770 filing fee paid for the improper RCE on October 14, 2003 and the $340 filing fee for the improper CPA on November 20, 2003.

Since petitioner has complied with 37 CFR 1.137(b), the application may be returned to a pending status. However, in view of petitioner's request to withdraw the application from issue to permit abandonment for consideration of an Information Disclosure Statement filed in a continued prosecution application filed of even date, the application is withdrawn from issue and again abandoned in favor of the continuing application under 37 CFR 1.53(d). The terminal disclaimer filed October 21, 2004 is accepted.

Petitioner is advised that the issue fee paid on October 21, 2004, in the parent application is not refundable nor can it be applied towards any new Notice of Allowance which may issue on the CPA filed October 21, 2004.

The application file is being returned to Technology Center AU 2914 for further processing of the CPA filed October 21, 2004.

Telephone inquiries concerning this decision should be directed to the undersigned at (571) 272-3204.

Sherry D. Brinkley
Petitions Examiner
Office of Petitions
Office of the Deputy Commissioner
for Examination Policy

UNITED STATES PATENT AND TRADEMARK OFFICE

COMMISSIONER FOR PATENTS
UNITED STATES PATENT AND TRADEMARK OFFICE
P.O. BOX 1450
ALEXANDRIA, VA 22313-1450
www.uspto.gov

5/16/05

JACKIE JAY SCHWARTZ
1350 BROADWAY
SUITE 1510
NEW YORK, NY 10018

In re Application of
Mario Mainetti
Serial No.: 29/167,365
Filed: September 12, 2002
Attorney Docket No.: 1031-11

: PETITION DECISION

This is a decision on applicant's petition to revive patent application under 37 CFR 1.137(b), received February 11, 2005, to revive an unintentionally abandoned application.

This application became abandoned for failure to timely respond to the Notice of Allowance mailed November 4, 2004, which set a three-month statutory period to pay the Issue fee. As no response was received by February 4, 2005, the application was abandoned; applicant then filed this petition.

A grantable petition for a design application under 37 CFR 1.137(b), as revised December 1, 1997, requires four items: (1) a petition and petition fee; (2) a complete response if not earlier made; (3) a statement that the entire period of delay in prosecution was unintentional; and (4) a terminal disclaimer and disclaimer fee. The requirement for filing a terminal disclaimer (4) has been waived, as the Petition was filed before the mailing of the Notice of Abandonment.

Applicant's petition is **GRANTED**.

The application will be forwarded to Publications to be printed as a patent in due course.

Should there be any questions with respect to this decision, please contact Sandra Morris; by mail addressed to: Director, Technology Center 1700/2900, P.O. Box 1450, Alexandria, VA 22313-1450; or by telephone at (571) 272-2622 or by facsimile transmission at (571) 273-2622.

Jacqueline Stone
Director, Technology Center 1700/2900

UNITED STATES PATENT AND TRADEMARK OFFICE

COMMISSIONER FOR PATENTS
UNITED STATES PATENT AND TRADEMARK OFFICE
P.O. BOX 1450
ALEXANDRIA, VA 22313-1450
www.uspto.gov

2005

SMITH, GAMBRELL & RUSSELL, LLP
SUITE 3100, PROMENADE II
1230 PEACHTREE STREET, N.E.
ATLANTA, GA 30309-3592

In re Application of
James Lu
Serial No.: 29/167,430
Filed: September 13, 2002
Attorney Docket No.: 043459.004

: PETITION DECISION

This is a decision on applicant's petition to revive patent application under 37 CFR 1.137(b), filed on September 17, 2004, to revive an unintentionally abandoned application.

This application became abandoned for failure to fully respond to the Notice of Allowance mailed January 7, 2004, which set a three month statutory period of time to submit the Issue fee and formal drawings. The Issue fee was submitted March 30, 2004; however, as no formal drawings were received by April 7, 2004, a Notice of Abandonment was mailed June 7, 2004.

A grantable petition under 37 CFR 1.137(b), as revised December 1, 1997, requires four items: (1) a petition and petition fee; (2) a complete response if not earlier made; (3) a statement that the entire period of delay in prosecution was unintentional; and (4) a terminal disclaimer and disclaimer fee. Applicant's petition lacks the terminal disclaimer and fee (4), which must be filed with petitions for design applications (37 CFR 1.137(a)). An attempt was made on December 8, 2004 to obtain a terminal disclaimer by facsimile; however, it was not received by the Office.

Any renewed petition in order to be considered timely must be filed within TWO MONTHS of the date of mailing of this decision.

Applicant's petition is **DISMISSED.**

Should there be any questions with respect to this decision, please contact Sandra Morris; by mail addressed to: Director, Technology Center 1700/2900, P.O. Box 1450, Alexandria, VA 22313-1450; or by telephone at (571) 272-2622.

Jacqueline Stone
Director, Technology Center 1700/2900

UNITED STATES PATENT AND TRADEMARK OFFICE

COMMISSIONER FOR PATENTS
UNITED STATES PATENT AND TRADEMARK OFFICE
P.O. BOX 1450
ALEXANDRIA, VA 22313-1450
www.uspto.gov

SMITH, GAMBRELL & RUSSELL, LLP
SUITE 3100, PROMENADE II
1230 PEACHTREE STREET, N.E.
ATLANTA, GA 30309-3592

MAR 2 5 2005

In re Application of
James Lu
Serial No.: 29/167,430
Filed: September 13, 2002
Attorney Docket No.: 043459.004

: PETITION DECISION

This is a decision on applicant's renewed petition to revive patent application under 37 CFR 1.137(b), filed by facsimile on February 8, 2005, to revive an unintentionally abandoned application.

This application became abandoned for failure to fully respond to the Notice of Allowance mailed January 7, 2004, which set a three month statutory period of time to submit the Issue fee and formal drawings. The Issue fee was submitted March 30, 2004; however, as no formal drawings were received by April 7, 2004, a Notice of Abandonment was mailed June 7, 2004. Applicant's previous petition was dismissed, due to the lack of a terminal disclaimer.

A grantable petition under 37 CFR 1.137(b), as revised December 1, 1997, requires four items: (1) a petition and petition fee; (2) a complete response if not earlier made; (3) a statement that the entire period of delay in prosecution was unintentional; and (4) a terminal disclaimer and disclaimer fee. Applicant's petition still lacks the terminal disclaimer fee (4), which must be filed with petitions for design applications (37 CFR 1.137(a)). Applicant's facsimile did not include any form of payment, which would be required before the petition can be granted.

Any renewed petition in order to be considered timely must be filed within TWO MONTHS of the date of mailing of this decision.

Applicant's petition is **DISMISSED.**

Should there be any questions with respect to this decision, please contact Sandra Morris; by mail addressed to: Director, Technology Center 1700/2900, P.O. Box 1450, Alexandria, VA 22313-1450; or by telephone at (571) 272-2622.

Jacqueline Stone
Director, Technology Center 1700/2900

UNITED STATES PATENT AND TRADEMARK OFFICE

Commissioner for Patents
United States Patent and Trademark Office
P.O. Box 1450
Alexandria, VA 22313-1450
www.uspto.gov

SMITH, GAMBRELL & RUSSELL, LLP
SUITE 3100, PROMENADE II
1230 PEACHTREE STREET, N.E.
ATLANTA, GA 30309-3592

6/23/05

In re Application of
James Lu
Serial No.: 29/167,430
Filed: September 13, 2002
Attorney Docket No.: 043459.004

: PETITION DECISION

This is a decision on applicant's renewed petition to revive patent application under 37 CFR 1.137(b), received May 27, 2005, to revive an unintentionally abandoned application.

This application became abandoned for failure to fully respond to the Notice of Allowance mailed January 7, 2004, which set a three month statutory period of time to submit the Issue fee and formal drawings. The Issue fee was submitted March 30, 2004; however, as no formal drawings were received by April 7, 2004, a Notice of Abandonment was mailed June 7, 2004. Applicant's previous petition was dismissed, due to the lack of a terminal disclaimer. The petition filed February 8, 2005 was dismissed, due to the lack of a terminal disclaimer fee.

A grantable petition for a design application under 37 CFR 1.137(b), as revised December 1, 1997, requires four items: (1) a petition and petition fee; (2) a complete response if not earlier made; (3) a statement that the entire period of delay in prosecution was unintentional; and (4) a terminal disclaimer and disclaimer fee.

Applicant's petition is **GRANTED**.

The application will be forwarded to Publication Division for printing as a patent in due course.

Should there be any questions with respect to this decision, please contact Sandra Morris; by mail addressed to: Director, Technology Center 1700/2900, P.O. Box 1450, Alexandria, VA 22313-1450; or by telephone at (571) 272-2622.

Jacqueline M. Stone

Jacqueline Stone
Director, Technology Center 1700/2900

UNITED STATES PATENT AND TRADEMARK OFFICE

AUG 11 2004

Commissioner for Patents
United States Patent and Trademark Office
P.O. Box 1450
Alexandria, VA 22313-1450
www.uspto.gov

#8

MCCARTER & ENGLISH LLP
CITYPLACE 1
185 ASYLUM STREET
HARTFORD, CT 06103

In re Application of	:
James Sayre et al.	:
Serial No.: 29/167,447	: PETITION DECISION
Filed: September 13, 2002	:
Attorney Docket No.: BEEK-126	:

This is a decision on applicant's Petition for Withdrawal of Notice of Abandonment under 37 CFR 1.181 submitted June 22, 2004, to revive an unavoidably abandoned application.

This application became abandoned for failure to respond to the Office action mailed September 9, 2003, which set a one-month shortened statutory period to respond. As no response was received by October 9, 2003, a Notice of Abandonment was mailed June 2, 2004. Applicant then filed this petition.

Applicant has submitted that the response was timely filed, and has submitted copies of the response with a Certificate of Mailing date of October 9, 2003 and Post Card receipt that show that the response was timely filed. While this response was never associated with the application, it is clear that applicant timely responded to the Office action, and the application was abandoned in error.

Applicant's petition is **GRANTED.**

The application will be promptly forwarded to the Examiner for evaluation of applicant's response in due course.

Should there be any questions with respect to this decision, please contact Sandra Morris; by mail addressed to: Director, Technology Center 3700/2900, P.O. Box 1450, Alexandria, VA 22313-1450; or by telephone at (571) 272-2622.

John Kittle
Director, Technology Center 3700/2900

UNITED STATES PATENT AND TRADEMARK OFFICE

Commissioner for Patents
United States Patent and Trademark Office
P.O. Box 1450
Alexandria, VA 22313-1450
www.uspto.gov

G. DONALD WEBER, JR.
18442 TAFT AVENUE
VILLA PARK CA 92861

COPY MAILED

SEP 2 0 2005

OFFICE OF PETITIONS

In re Patent No. D499,560 :
Issue Date: December 14, 2004 :
Application No. 29/167,621 : ON PETITION
Filed: September 19, 2002 :
Attorney Docket No: MEI-19

This is a decision on the status letter, filed February 4, 2005, which is treated under 37 CFR 1.182, requesting the issuance of duplicate Letters Patent for the above-identified patent.

The petition is **DISMISSED**.

It is U.S. Patent and Trademark Office practice to assure mailing of all papers such as the Letters Patent in this application, on the date indicated and duly addressed and timely delivered to the addressee.

Petitioners have not presented any evidence to prove that the Original, Ribboned copy of the Letters Patent mailed December 14, 2004 to the address of record, were not received.

Therein, a request for the issuance of duplicate Letters Patent carries with it a required petition fee in the amount of $400.00 pursuant to 37 CFR 1.182 and 37 CFR 1.17(f).

Telephone inquiries concerning this matter may be directed to the undersigned Petitions Attorney at (571) 272-3212.

Patricia Faison-Ball

Patricia Faison-Ball
Senior Petitions Attorney
Office of Petitions

UNITED STATES PATENT AND TRADEMARK OFFICE

COMMISSIONER FOR PATENTS
UNITED STATES PATENT AND TRADEMARK OFFICE
P.O. BOX 1450
ALEXANDRIA, VA 22313-1450
www.uspto.gov

Paper No. 6

Kyocera Wireless Corp.
Attn: Patent Department
PO Box 928289
San Diego, CA 92192-8289

COPY MAILED
APR 13 2004
OFFICE OF PETITIONS

In re Application of :
Paul Smith et al. :
Application No. 29/167,632 :
Filed: September 17, 2002 :
Attorney Docket No. UTL 00058 :

ON PETITION

This is a decision on the petition filed October 14, 2003, by the law firm of Procopio, Cory, Hargreaves & Savitch, LLP, to accord the above-identified application a filing date of September 17, 2002.

The petition is **granted**.

On September 17, 2002, the application was filed.

On October 7, 2002, the Office of Initial Patent Examination mailed a Notice stating that a claim was not present and that a filing date had not been accorded and the filing date would be the date of receipt of a claim.

The requirement for a claim in a design application is a requirement of the statute. Section 171 of title 35 of the United States Code makes section 112 applicable to design applications. Section 112 requires that the "specification shall conclude with one or more claims..." Thus, the requirement for a claim in a design application is not pro forma, but is a necessary part of a complete design application.

A review of the record reveals that no formal claim was included with the application papers deposited September 17, 2002. However, the application papers deposited September 17, 2002, included a declaration stating that the inventors believed themselves to be

> the original and first inventor of the subject matter which is claimed and for which a patent is sought on the invention entitled: Wireless Communication Device the specification of which is attached hereto.

A formal claim was not included with te application when it was deposited. However, since this is a design application, the above-quoted language in the declaration can be construed as the claim required by 35 U.S.C. 112, second paragraph, insofar as this design application is concerned. The form of a claim in a design application is fixed by rule and is accordingly different from the claims of other applications. Accordingly, since this is a design application and since the claim language quoted above does appear at the conclusion or end of the specification, there is no statutory prohibition against construing this language as the claim required by statute. It is also clear that there has been, and is, no doubt as to the form of, and what is to be claimed herein since this is a design application for which the form of the claim is set by 37 CFR 1.153. Under the circumstances, it is appropriate that the language quoted above from the declaration be construed as the claim for filing date

purposes. The petition is granted to the extent that the language cited in the declaration will be construed as a claim.

Since a formal claim was not filed with the original application, a petition fee of $130 will be charged to petitioner's deposit account (50-2075). Since a declaration signed by all the inventors was not submitted until after the filing date, the surcharge of $130 will be charged to petitioner's deposit account.

A copy of the instant petition was received on February 10, 2004. In response, the Office of Initial Patent Examination charged the sum of $2,010 to petitioner's deposit account for a five month extension of time. However, an extension of time may not be obtained in response to a Notice of Incomplete Application. Therefore, the $2,010 will be credited back to petitioner's deposit account.

The Notice mailed October 7, 2002 was sent in error and is hereby vacated.

There is no indication that the person signing the instant petition was ever given a power of attorney or authorization of agent to prosecute the above-identified application. If the person signing the instant petition desires to receive future correspondence regarding this application, the appropriate power of attorney or authorization of agent must be submitted. While a courtesy copy of this decision is being mailed to the person signing the instant petition, all future correspondence will be directed solely to the address currently of record until such time as appropriate instructions are received to the contrary.

The Application is being returned to the Office of Initial Patent Examination for further processing with a filing date of September 17, 2002, using the application papers filed on September 17, 2002.

Telephone inquiries should be directed to Petitions Attorney Steven Brantley at (703) 306-5683.

Charles Steven Brantley
Senior Petitions Attorney
Office of Petitions

cc: Stephen C. Beuerle
Procopio, Cory, Hargreaves & Savitch, LLP
530 B Street, Suite 2100
San Diego, CA 92101-4469

UNITED STATES PATENT AND TRADEMARK OFFICE

JUL 08 2004

Commissioner for Patents
United States Patent and Trademark Office
P.O. Box 1450
Alexandria, VA 22313-1450
www.uspto.go

OBLON SPIVAK MCCLELLAND MAIER
& NEUSTADT PC
1940 DUKE STREET
ALEXANDRIA, VA 22314

In re Application of	:
Komoto Satoshi	:
Serial No.: 29/168,222	: PETITION DECISION
Filed: September 30, 2002	:
Attorney Docket No.: 228943US3SDES	:

This is a decision on applicant's Request for Withdrawal of Notice of Allowance, which is being treated as a Petition for Withdrawal of Notice of Abandonment filed under 37 CFR 1.181 submitted October 8 2003 to revive an unavoidably abandoned application. The delay in acting upon this petition is regretted.

This application became abandoned for failure to properly respond to the Notice to File Missing Parts mailed October 24, 2002, which set a two-month statutory period to respond. As no response was received by December 24, 2002, a Notice of Abandonment was mailed September 8, 2003. Applicant then filed this petition.

Applicant has submitted that the response was timely filed on December 3, 2002, and has submitted copies of the response with a Post Card Receipt, which shows that the response was timely filed. While the response was never associated with the application, it is clear that applicant timely responded to the Notice, and the application was abandoned in error.

Applicant's petition is **GRANTED.**

The application will be promptly forwarded to an Examiner for initial examination in due course.

Should there be any questions with respect to this decision, please contact Sandra Morris; by mail addressed to: Director, Technology Center 3700/2900, P.O. Box 1450, Alexandria, VA 22313-1450; or by telephone at (571) 272-2622.

John Kittle
Director, Technology Center 3700/2900

UNITED STATES PATENT AND TRADEMARK OFFICE

Commissioner for Patents
United States Patent and Trademark Office
P. O. Box 1450
Alexandria, VA 22313-1450
www.uspto.gov

Paper No. 6

LEYDIG VOIT & MAYER LTD.
700 THIRTEENTH STREET NW
SUITE 300
WASHINGTON DC 20005-3960

COPY MAILED

AUG 1 4 2003

OFFICE OF PETITIONS

In re Application of	:
Kei Oya et al	:
Application No. 29/168,231	: DECISION GRANTING PETITION
Filed: September 30, 2002	: UNDER 37 CFR 1.181
Attorney Docket No. 402251	:

This is a decision on the petition filed June 25, 2003,[1] and supplemented on August 5, 2003 and August 13, 2003, which petition is being treated as a petition under 37 CFR 1.181 to reset the period for reply and for a refund of a five month extension of time fee submitted on May 22, 2003.

The petition is **granted**.

The record for this file discloses that a Notice to File Missing Parts of Nonprovisional Application requiring the submission of an executed oath or declaration, the basic filing fee, and a surcharge for their late filing was mailed on October 22, 2002 to the above-noted address of record. However, petitioner contends that this Notice was never received through the mails but was transmitted by facsimile to him by OIPE on May 22, 2003, the last day on which a reply with the maximum extension of time fee could be timely filed. Because the Notice was not received until May 22, 2003, petitioner now requests that the period for reply be restarted and the five month extension of time fee submitted on May 22, 2003 be refunded.

---

[1] The originally filed petition under 37 CFR 1.181 to reset the period for reply was received in the USPTO on May 22, 2003, as evidenced by the copy of a stamped post card receipt submitted with the instant petition. Accordingly, the copy of the petition supplied on June 25, 2003 will be accepted in place of the petition acknowledged as having been received in the USPTO on May 22, 2003.

In support of nonreceipt of the Notice of October 22, 2002, petitioner has submitted a copy of his incoming mail log, which does not reflect receipt of the aforementioned Notice. Additionally, in the supplemental petition of August 5, 2003, petitioner has set forth the docketing procedures and indicated that no entry for the Notice of May 22, 2003 for this application appears in the computer database or on the front of the file jacket. Further, on August 13, 2003, petitioner supplied a copy of the facsimile transmission from DeShawn Durham of OIPE dated May 22, 2003 transmitting to him a copy of the Notice of October 22, 2002.

The pertinent section of MPEP § 710.06 dealing with resetting the period for reply is reproduced below:

> PETITIONS TO RESET A PERIOD FOR REPLY DUE TO LATE RECEIPT OF AN OFFICE ACTION
>
> The Office will grant a petition to restart the previously set period for reply to an Office action to run from the date of receipt of the Office action at the correspondence address when the following criteria are met:
> (A) the petition is filed within 2 weeks[2] of the date of receipt of the Office action at the correspondence address;
> (B) a substantial portion of the set reply period had elapsed on the date of receipt (e.g., at least 1 month of a 2- or 3-month reply period had elapsed); and
> (C) the petition includes (1) evidence showing the date of receipt of the Office action at the correspondence address (e.g., a copy of the Office action having the date of receipt of the Office action at the correspondence address stamped thereon, a copy of the envelope (which contained the Office action) having the date of receipt of the Office action at the correspondence address stamped thereon, etc.), and (2) a statement setting forth the date of receipt of the Office action at the correspondence address and

---

[2] As shown by the stamped post card receipt supplied by petitioner herein, the petition was originally received in the USPTO on May 22, 2003, well within two weeks of receipt of the copy of the Notice of October 22, 2002.

> explaining how the evidence being presented establishes the date of receipt of the Office action at the correspondence address.

Petitioner has satisfied the conditions set forth in MPEP 710.06 for resetting the period for reply in demonstrating that the Notice of October 22, 2002 was not received until May 22, 2003, the last day of the maximum extendible period for reply. In view thereof, it would be appropriate to remail the Notice, setting a new period for reply. However, since the reply required by the Notice has now been received, it is unnecessary to remail a Notice resetting the period for reply. Accordingly, a new period for submitting a reply will not be remailed. The reply received on May 22, 2003 will be accepted as having been timely received.

Further, it would be appropriate, for the reasons stated above, to refund the five month extension of time fee received on May 22, 2003. Therefore, as requested, the $1,970 five month extension of time fee received on May 22, 2003 will be refunded to petitioner's Deposit Account No. 12-1216.

Inquiries specific to this decision may be directed to the undersigned at (703) 305-8680.

This application is being returned to the Office of Initial Patent Examination for completion of the pre-examination processing.

Frances Hicks

Frances Hicks
Petitions Examiner
Office of Petitions
Office of the Deputy Commissioner
for Patent Examination Policy

UNITED STATES PATENT AND TRADEMARK OFFICE

Commissioner for Patents
United States Patent and Trademark Office
P.O. Box 1450
Alexandria, VA 22313-1450
www.uspto.gov

Paper No. 3

BIRCH, STEWART, KOLASCH & BIRCH, LLP
P.O. BOX 747
FALLS CHURCH, VA 22040-0747

COPY MAILED

OCT 2 7 2004

OFFICE OF PETITIONS

In re Application of	:	
Cheng	:	DECISION GRANTING
Application No. 29/168,276	:	PETITION
Filed: May 4, 2004	:	
Attorney Docket No. 4637-0106PUS1	:	
For: CHARACTER PEN		

This is a decision on the petition filed October 20, 2004, requesting that an application of Dido Cheng entitled "CHARACTER PEN" (attorney docket No. 4637-0106PUS1) be accorded a filing date of May 4, 2004.

The papers filed on May 4, 2004, included a copy of a postcard receipt bearing docket No. 4637-0106PUS1 and acknowledging the filing in the Office on May 4, 2004, of, *inter alia*, a transmittal letter, 1 page of specification, 7 sheets of formal drawings, a combined declaration and power of attorney, and $170 in fees. The petition was also accompanied by a copy of the original application as shown by counsel's files.

The original papers identified on the postcard receipt cannot be located in the Office. However, in view of the evidence presented, it is concluded that the application was filed in the Office on May 4, 2004, and later misplaced.

The petition to accord the application a filing date of May 4, 2004, is granted. No petition fee is required and none has been charged.

Since the original application papers cannot be located in the Office, the duplicate papers received on October 20, 2004, will be used for examination purposes. The application has been assigned application No. 29/168,276.

Applicant should notify this office if the original papers are subsequently discovered in the Office so that the present duplicate file can be merged with the original papers and any duplicate filing fee refunded.

There is no evidence in the file that the $170 check filed on May 4, 2004 was ever processed by the Office. Accordingly, the check for $170 submitted with the instant petition will be processed.

After the mailing of this decision, the application will be forwarded to Initial Patent Examination Division for further processing with a filing date of May 4, 2004, using the copy of the application papers supplied on October 20, 2004.

Telephone inquiries may be directed to the undersigned at (571) 272-3230.

E. Shirene Willis

E. Shirene Willis
Petitions Attorney
Office of Petitions
Office of the Deputy Commissioner
for Patent Examination Policy

UNITED STATES PATENT AND TRADEMARK OFFICE

Commissioner for Patents
United States Patent and Trademark Office
P.O. Box 1450
Alexandria, VA 22313-1450
www.uspto.gov

Marshall & Melhorn, LLC
Four SeaGate/Eighth Floor
Toledo, OH 43604

COPY MAILED

NOV 1 2 2004

OFFICE OF PETITIONS

In re Application of	:	DECISION ON PETITION
James J. Huttner	:	
Application No. 29/168,277	:	
Filed: May 3, 2004	:	
Attorney Docket No. 1-16565	:	

This is a decision on the petition under 37 CFR 1.10(e), filed October 25, 2004, requesting that the above-identified design application entitled "Curette Tip Design" be assigned an application number and accorded a filing date of May 3, 2004.

In the present petition, petitioner alleges that the application was deposited in Express Mail service with the United States Postal Service (USPS) on May 3, 2004. In support of the allegation, petitioner provided a copy of the Express Mail label No. EL992928748US, showing a date-in of "5-3-4". Additionally, the petition is accompanied by a USPS Track & Confirm receipt indicating that a package bearing Express Mail label No. EL992928748US was delivered at 10:15 am on May 4, 2004 in Alexandria, VA 22313 to the Patent Office. The same Express Mail label number was placed on the original application papers.

The Office considers the date the paper or fee is shown to have been deposited as "Express Mail" to be the "date-in" on the Express Mail label. See MPEP 513. This is the date that verifies that the package was actually mailed.

In view of the above, the evidence is convincing that the application was deposited as "Express Mail" with the USPS on May 3, 2004. The petition is **granted**.

This application file will be forwarded to the Office of Initial Patent Examination for processing with a **filing date of May 3, 2004.**

Telephone inquiries should be directed to the undersigned at (571) 272-3211.

Christina Tartera Donnell

Christina Tartera Donnell
Senior Petitions Attorney
Office of Petitions

UNITED STATES PATENT AND TRADEMARK OFFICE

Commissioner for Patents
United States Patent and Trademark Office
P.O. Box 1450
Alexandria, VA 22313-1450
www.uspto.gov

Marshall & Melhorn, LLC
Four SeaGate/Eighth Floor
Toledo, OH 43604

COPY MAILED

NOV 1 2 2004

OFFICE OF PETITIONS

In re Application of	:	DECISION ON PETITION
James J. Huttner	:	
Application No. 29/168,278	:	
Filed: May 3, 2004	:	
Attorney Docket No. 1-16536	:	

This is a decision on the petition under 37 CFR 1.10(e), filed October 25, 2004, requesting that the above-identified design application entitled "Curette" be assigned an application number and accorded a filing date of May 3, 2004.

In the present petition, petitioner alleges that the application was deposited in Express Mail service with the United States Postal Service (USPS) on May 3, 2004. In support of the allegation, petitioner provided a copy of the Express Mail label No. EL992927946US, showing a date-in of "5-3-4". Additionally, the petition is accompanied by a USPS Track & Confirm receipt indicating that a package bearing Express Mail label No. EL992927946US was delivered at 10:15 am on May 4, 2004 in Alexandria, VA 22313 to the Patent Office. The same Express Mail label number was placed on the original application papers.

The Office considers the date the paper or fee is shown to have been deposited as "Express Mail" to be the "date-in" on the Express Mail label. See MPEP 513. This is the date that verifies that the package was actually mailed.

In view of the above, the evidence is convincing that the application was deposited as "Express Mail" with the USPS on May 3, 2004. The petition is **granted**.

This application file will be forwarded to the Office of Initial Patent Examination for processing with a **filing date of May 3, 2004**.

Telephone inquiries should be directed to the undersigned at (571) 272-3211.

Christina Tartera Donnell

Christina Tartera Donnell
Senior Petitions Attorney
Office of Petitions

UNITED STATES PATENT AND TRADEMARK OFFICE

Commissioner for Patents
United States Patent and Trademark Office
P.O. Box 1450
Alexandria, VA 22313-1450
www.uspto.gov

Marshall & Melhorn, LLC
Four SeaGate/Eighth Floor
Toledo, OH 43604

COPY MAILED

NOV 1 2 2004

OFFICE OF PETITIONS

In re Application of	:	DECISION ON PETITION
James J. Huttner	:	
Application No. 29/168,279	:	
Filed: May 3, 2004	:	
Attorney Docket No. 1-16564	:	

This is a decision on the petition under 37 CFR 1.10(e), filed October 25, 2004, requesting that the above-identified design application entitled "Curette Body" be assigned an application number and accorded a filing date of May 3, 2004.

In the present petition, petitioner alleges that the application was deposited in Express Mail service with the United States Postal Service (USPS) on May 3, 2004. In support of the allegation, petitioner provided a copy of the Express Mail label No. EL992928734US, showing a date-in of "5-3-4". Additionally, the petition is accompanied by a USPS Track & Confirm receipt indicating that a package bearing Express Mail label No. EL992928734US was delivered at 10:15 am on May 4, 2004 in Alexandria, VA 22313 to the Patent Office. The same Express Mail label number was placed on the original application papers.

The Office considers the date the paper or fee is shown to have been deposited as "Express Mail" to be the "date-in" on the Express Mail label. See MPEP 513. This is the date that verifies that the package was actually mailed.

In view of the above, the evidence is convincing that the application was deposited as "Express Mail" with the USPS on May 3, 2004. The petition is **granted**.

This application file will be forwarded to the Office of Initial Patent Examination for processing with a **filing date of May 3, 2004**.

Telephone inquiries should be directed to the undersigned at (571) 272-3211.

Christina Tartera Donnell

Christina Tartera Donnell
Senior Petitions Attorney
Office of Petitions

UNITED STATES PATENT AND TRADEMARK OFFICE

Commissioner for Patents
United States Patent and Trademark Office
P.O. Box 1450
Alexandria, VA 22313-1450
www.uspto.gov

ROBERT A. SCHROEDER
BINGHAM MCCUTCHEN, LLP
THREE EMBARCADERO CENTER, SUITE 1800
SAN FRANCISCO CA 94111-4067

COPY MAILED

DEC 0 8 2004

OFFICE OF PETITIONS

In re Application of
Henry, et al.
Application No. 29/168,280
Filed: May 19, 2003
Attorney Docket No. 7031373001
For: SWIRL CAP

: DECISION GRANTING
: PETITION

This is a decision on the petition, filed November 17, 2003 and resubmitted on January 12, 2004, requesting that the above-identified application be accorded an application number and a filing date of May 19, 2003. The petition will be treated under 37 CFR 1.10(e). The Office apologizes for the delay in addressing the petition.

Petitioners request a May 19, 2003 filing date on the basis that the application was deposited in Express Mail service on May 19, 2003, pursuant to the requirements of 37 CFR 1.10. The petition is accompanied a complete copy of petitioners' application, including a design patent application transmittal form, a fee transmittal form, 1 page of specification, 4 sheets of drawings, 2 pages of declaration, and an itemized post card receipt. In addition, petitioners submitted an IDS, copies of IDS citations, a preliminary amendment, a change of address and docket number, and a petition for extension of time in parent application no. 29/144,808.

The petition contains a copy of Express Mail label EU874337083US showing a date-in of May 19, 2003. The same Express Mail label number is found on the original design patent application transmittal. The petition, signed by Attorney Gary D. Lueck states that the original application was filed as Express Mail with the USPS on May 19, 2003. Attorney Lueck states that the papers submitted with the instant petition are copies of the original application papers.

Paragraph (e) of 37 CFR 1.10 states that:

> Any person mailing correspondence addressed as set out in 1.1(a) to the Office with sufficient postage utilizing the "Express Mail Post Office to Addressee" service of the USPS, but not received by the Office, may petition the Commissioner to consider such correspondence as filed in the Office on the USPS deposit date, provided that:
>
> (1) The petition is filed promptly after the person becomes aware that the Office has no evidence of receipt of the correspondence;
>
> (2) The number of the "Express Mail" mailing label was placed on the paper(s) or fee(s) that constitute the correspondence prior to the original mailing by "Express Mail";
>
> (3) The petition includes a copy of the originally deposited paper(s) or fee(s) that constitute the correspondence showing the number of the "Express Mail" mailing label thereon, a copy of any returned postcard receipt, a copy of the "Express Mail" mailing label showing the "date-in," a copy of any other official notation by the USPS relied upon to show the date of deposit, and, if the requested filing date is a date other than the "date-in" on the "Express Mail" mailing label or other official notation entered by the

USPS, a showing pursuant to paragraph (d)(3) of this section that the requested filing date was the date the correspondence was deposited in the "Express Mail Post Office to Addressee" service prior to the last scheduled pickup for that day; and

(4) The petition includes a statement which establishes, to the satisfaction of the Commissioner, the original deposit of the correspondence and that the copies of the correspondence, the copy of the "Express Mail" mailing label, the copy of any returned postcard receipt, and any official notation entered by the USPS are true copies of the originally mailed correspondence, original "Express Mail" mailing label, returned postcard receipt, and official notation entered by the USPS.

The Office considers the date the paper or fee is shown to have been deposited as "Express Mail" to be the "Date In" on the Express Mail label, MPEP 513. That is the date that verifies that the package was actually mailed. In view of the above, the evidence is convincing that the application was deposited as "Express Mail" with the US Postal Service on May 19, 2003.

Accordingly, the petition is granted. The application is assigned serial number 29/168,280 and a filing date of May 19, 2003.

Regarding finances, the $130.00 petition fee submitted on January 12, 2004 will be credited to deposit account no. 50-2518. The same deposit account will be charged the $330.00 basic filing fee that should have been charged in May 2003.

Petitioners are reminded that every application file must be complete in and of itself. Rule 1.4(c). Therefore, the fee transmittal that authorized payment of the basic filing fee for the instant application and the two month extension of time in application no. 29/144,808 should have been submitted separately. Petitioners should submit another copy of the fee transmittal, evidence that the fee transmittal was filed on May 19, 2003, and an instruction to only charge the extension of time fee in application no. 29/144,808. The date of abandonment in application no. 29/144,808 is critical for continuity purposes.

The application is being forwarded to the Office of Initial Patent Examination for further processing with a filing date of **May 19, 2003** and the mailing of a filing receipt.

Thereafter, the application will be next forwarded to Technology Center 2900 for examination in due course.

Any inquiries related to this decision should be directed to the undersigned at (571) 272-3230.

E. Shirene Willis

E. Shirene Willis
Senior Petitions Attorney
Office of Petitions
Office of the Deputy Commissioner
for Patent Examination Policy

UNITED STATES PATENT AND TRADEMARK OFFICE

Commissioner for Patents
United States Patent and Trademark Office
P.O. Box 1450
Alexandria, VA 22313-1450
www.uspto.gov

RATNERPRESTIA
P O BOX 980
VALLEY FORGE PA 19482-0980

COPY MAILED
JAN 28 2005
OFFICE OF PETITIONS

In re Application of
Paul Tashjian
Application No. 29/168,281
Filed: May 3, 2004
Attorney Docket No. PTJ-100US

: DECISION GRANTING PETITION

This is a decision on the petition filed January 21, 2005 regarding a lost application which is treated under 37 CFR 1.10(e)[1] .

The petition under 37 CFR 1.10 is GRANTED.

Petitioner asserts that the above-identified application was filed May 3, 2004 by Express Mail. Petitioner claims that no filing receipt or application serial number has been received on the papers filed May 3, 2004.

In support of the averments made, petitioner presents a copy of the Express Mail label, receipt No. EV426717602US, showing a date-in of, May 3, 2004. The same Express Mail receipt number was referred to on the itemized Design Patent Application Transmittal sheet submitted with the present petition. The application transmittal sheet itemizes the filing of the application with a specification, drawings and an Oath or

---

[1]37 CFR 1.10(e) provides that:

Any person mailing correspondence properly addressed to the Office with sufficient postage utilizing "Express Mail Post Office to Addressee" service of the USPS but not received by the Office, may petition the Commissioner to consider such correspondence filed in the Office on the USPS deposit date, provided that:

(1) The petition is filed promptly after the person becomes aware that the Office has no evidence of receipt of the correspondence;

(2) The number of the "Express Mail" mailing label was placed on the paper(s) or fee(s) that constitute the correspondence prior to the original mailing by "Express Mail";

(3) The petition includes a copy of the originally deposited paper(s) or fee(s) that constitute the correspondence showing the number of the "Express Mail" mailing label thereon, a copy of any returned postcard receipt, a copy of the "Express Mail" mailing label showing the "date-in," a copy of any other official notation by the USPS relied upon to show the date of deposit, and, if the requested filing date is a date other than the "date-in" on the "Express Mail" mailing label or other official notation entered by the USPS, a showing pursuant to paragraph (d)(3) of this section that the requested filing date was the date the correspondence was deposited in the "Express Mail Post Office to Addressee" service prior to the last scheduled pickup for that day; and

(4) The petition includes a statement which establishes, to the satisfaction of the Commissioner, the original deposit of the correspondence and that the copies of the correspondence, the copy of the "Express Mail" mailing label, the copy of any returned postcard receipt, and any official notation entered by the USPS are true copies of the originally mailed correspondence, original "Express Mail" mailing label, returned postcard receipt, and official notation entered by the USPS.

Declaration. The petition is also accompanied by a copy of the transmittal letter, application including the specification, drawings, Oath or Declaration and the fee transmittal, asserted to have been filed May 3, 2004. Petitioner requests that the application be accorded a filing date of May 3, 2004, the date that the application including the specification, drawings and Oath or Declaration were filed in the USPTO.

Based on the evidence present in the file, it is concluded that the present application was filed in the USPTO but was subsequently misplaced in the Office. However, pursuant to 37 CFR 1.10, the Office considers the date the paper or fee is shown to have been deposited as "Express Mail" to be the "date-in" on the Express Mail label.[2] That is the date that verifies that the package was actually mailed. In view of the above, the evidence is convincing that the application was deposited as "Express Mail" with the USPS on May 3, 2004.

Accordingly, the petition to accord application a filing date is GRANTED.

In accepting this petition, the Office is construing the remarks made by counsel as a declaration that the application papers submitted with the present petition are true copies of the documents that were originally mailed, and that the documents were originally deposited on the date indicated on the Express Mail mailing label. Petitioners **must** notify the Office if this is an incorrect interpretation.

Please note the application number assigned to this application and refer to this number when corresponding with the USPTO regarding this application. Applicant should also notify this office if the original papers are subsequently discovered in the PTO so that the present duplicate file can be merged with the original papers and any duplicate filing fee refunded.

The filing fee has been charged to deposit account no. 18-0350 as authorized on the fee transmittal.

The application is being forwarded to the Office of Initial Patent Examination for further processing with a filing date of May 3, 2004, using the copy of the application papers supplied on January 21, 2005.

Telephone inquiries related to this decision should be directed to the undersigned Petitions Attorney at (571) 272-3212.

Patricia Faison-Ball

Patricia Faison-Ball
Senior Petitions Attorney
Office of Petitions

---

[2]MPEP 513.

UNITED STATES PATENT AND TRADEMARK OFFICE

Commissioner for Patents
United States Patent and Trademark Office
P.O. Box 1450
Alexandria, VA 22313-1450
www.uspto.gov

Paper No. 6

COPY MAILED

FEB 10 2005

OFFICE OF PETITIONS

ALSTON & BIRD LLP
BANK OF AMERICA PLAZA
101 SOUTH TRYON STREET, SUITE 4000
CHARLOTTE NC 28280-4000

In re Application of	:	
Copeland et al.	:	DECISION GRANTING
Application No. 29/168,282	:	PETITION
Filed: June 11, 2004	:	
Attorney Docket No. 047752/278707	:	

This is a decision on the petition under 37 CFR 1.10(e), filed January 12, 2005, requesting that a design application entitled "Pipe Gland Ear" (Docket No. 047752/278707) be assigned an application number and accorded a filing date of June 11, 2004.

Petitioner alleges that the application was deposited in Express Mail service on June 11, 2004. The Express Mail Label No. on the application papers is EV442275**262**US. With the present petition, petitioner submitted an Express Mail receipt and a USPS Track and Confirm Statement for a package being Express Mail label No. EV442275**276**US, which is different from the label number indicated on the application papers. However, petitioner also submitted a United States Postal Service Pickup Service Statement for Express Mail, Priority Mail, or Parcel Post, which indicates that a package bearing Express Mail label No. EV442275**262**US was accepted by a United States Postal employee on June 11, 2004, as evidenced by the USPS employee's signature and a USPS date-stamp of June 11, 2004.

Because petitioner has submitted corroborating evidence from the USPS indicating that a package bearing Express Mail Label No. EV442275**262**US, which is the same number indicated on the application papers, was accepted by the USPS on June 11, 2004, the application will be accorded the filing date of June 11, 2004.

In view of the above, the petition under 37 CFR 1.10(e) is **granted**. The application papers will be placed in Application No. 29/168,282, with a filing date of June 11, 2004. Additionally, the petition under 37 CFR 1.182 for expedited treatment is **granted.**

The Office finance records will be updated to indicate that the $400.00 petition fee was paid in Application No. 29/168,282, and not in Application No. 29/207,352.

The Office of Initial Patent Examination is directed to process Application No. 29/168,282, as a new design application with the filing date of June 11, 2004, using the application papers submitted on December 3, 2004.

Telephone inquiries should be directed to the undersigned at (571) 272-3211.

Christina Tartera Donnell

Christina Tartera Donnell
Senior Petitions Attorney
Office of Petitions

UNITED STATES PATENT AND TRADEMARK OFFICE

Commissioner for Patents
United States Patent and Trademark Office
P.O. Box 1450
Alexandria, VA 22313-1450
www.uspto.gov
DIW 03-05

Paper No. 3

OLIFF & BERRIDGE, PLC
P.O. BOX 19928
ALEXANDRIA VA 22320

COPY MAILED

MAR 28 2005

OFFICE OF PETITIONS

In re Application of	:	
Michifumi Ishigami	:	
Application No. 29/168,284	:	DECISION GRANTING PETITION
Filed: 14 June, 2004	:	
Attorney Docket No. 119528	:	

This is a decision on the petition under 37 CFR 1.53(b), filed on 19 November, 2004, which is treated as petition to accord the above-identified application a filing date of 14 June, 2004.

The petition is granted.

Petitioner asserts that the above-identified design application was filed on 14 June, 2004, but was subsequently lost in the U.S. Patent and Trademark Office. In support, petitioner presents a return courier receipt bearing a USPTO "Office-date" stamp dated 14 June, 2004. The courier receipt identifies the application papers by inventor name, invention title, and attorney docket number, and itemizes the filing of, *inter alia*, one (1) page of specification, including one claim, and eight (8) sheets of drawings. The petition was also accompanied by a copy of the one (1) page of specification including one (1) claim, and eight (8) sheets of drawings asserted to have been filed on 14 June, 2004. Petitioner requests that the application be accorded a filing date of 14 June, 2004, the date that the specification, at least one claim, and eight (8) sheets of drawings were filed in the USPTO.

In view of petitioner's itemized date-stamped receipt, the evidence is convincing that the application papers deposited on 14 June, 2004, included, *inter alia*, one (1) page of specification, including one (1) claim, and eight (8) sheets of drawings which were subsequently misplaced in the PTO.

Therefore, the application was complete on filing and entitled to a filing date of 14 June, 2004.

In view of the above, the petition is granted. No petition fee is required.

The application file is being forwarded to the Office of Initial Patent Examination for further processing with a filing date of 14 June, 2004, using, *inter alia*, the one (1) page of specification, including one (1) claim, and eight (8) sheets of drawings supplied with the present petition.

Telephone inquiries specific to this matter should be directed to the undersigned at (571) 272-3231.

D Wood

Douglas I. Wood
Senior Petitions Attorney
Office of Petitions

UNITED STATES PATENT AND TRADEMARK OFFICE

Commissioner for Patents
United States Patent and Trademark Office
P.O. Box 1450
Alexandria, VA 22313-1450
www.uspto.gov
DIW 03-05

Paper No. 3

OLIFF & BERRIDGE, PLC
P.O. BOX 19928
ALEXANDRIA VA 22320

COPY MAILED

MAR 28 2005

OFFICE OF PETITIONS

In re Application of	:	
Yasutake Yamaguchi	:	
Application No. 29/168,285	:	DECISION GRANTING PETITION
Filed: 14 June, 2004	:	
Attorney Docket No. 119527	:	

This is a decision on the petition under 37 CFR 1.53(b), filed on 19 November, 2004, which is treated as petition to accord the above-identified application a filing date of 14 June, 2004.

The petition is granted.

Petitioner asserts that the above-identified design application was filed on 14 June, 2004, but was subsequently lost in the U.S. Patent and Trademark Office. In support, petitioner presents a return courier receipt bearing a USPTO "Office-date" stamp dated 14 June, 2004. The courier receipt identifies the application papers by inventor name, invention title, and attorney docket number, and itemizes the filing of, *inter alia*, one (1) page of specification, including one claim, and four (4) sheets of drawings. The petition was also accompanied by a copy of the one (1) page of specification including one (1) claim, and four (4) sheets of drawings asserted to have been filed on 14 June, 2004. Petitioner requests that the application be accorded a filing date of 14 June, 2004, the date that the specification, at least one claim, and four (4) sheets of drawings were filed in the USPTO.

In view of petitioner's itemized date-stamped receipt, the evidence is convincing that the application papers deposited on 14 June, 2004, included, *inter alia*, one (1) page of specification, including one (1) claim, and four (4) sheets of drawings which were subsequently misplaced in the PTO.

Therefore, the application was complete on filing and entitled to a filing date of 14 June, 2004.

In view of the above, the petition is granted. No petition fee is required.

The application file is being forwarded to the Office of Initial Patent Examination for further processing with a filing date of 14 June, 2004, using, *inter alia*, the one (1) page of specification, including one (1) claim, and four (4) sheets of drawings supplied with the present petition.

Telephone inquiries specific to this matter should be directed to the undersigned at (571) 272-3231.

DWood

Douglas I. Wood
Senior Petitions Attorney
Office of Petitions

UNITED STATES PATENT AND TRADEMARK OFFICE

Commissioner for Patents
United States Patent and Trademark Office
P.O. Box 1450
Alexandria, VA 22313-1450
www.uspto.gov
DIW 03-05

Paper No. 3

OLIFF & BERRIDGE, PLC
P.O. BOX 19928
ALEXANDRIA VA 22320

COPY MAILED

MAR 28 2005

OFFICE OF PETITIONS

In re Application of	:	
Yasutake Yamaguchi	:	
Application No. 29/168,286	:	DECISION GRANTING PETITION
Filed: 14 June, 2004	:	
Attorney Docket No. 119526	:	

This is a decision on the petition under 37 CFR 1.53(b), filed on 18 October, 2004, which is treated as petition to accord the above-identified application a filing date of 14 June, 2004.

The petition is granted.

Petitioner asserts that the above-identified design application was filed on 14 June, 2004, but was subsequently lost in the U.S. Patent and Trademark Office. In support, petitioner presents a return courier receipt bearing a USPTO "Office-date" stamp dated 14 June, 2004. The courier receipt identifies the application papers by inventor name, invention title, and attorney docket number, and itemizes the filing of, *inter alia*, one (1) page of specification, one claim, and four (4) sheets of drawings. The petition was also accompanied by a copy of the one (1) page of specification including one (1) claim, and four (4) sheets of drawings asserted to have been filed on 14 June, 2004. Petitioner requests that the application be accorded a filing date of 14 June, 2004, the date that the specification, at least one claim, and four (4) sheets of drawings were filed in the USPTO.

In view of petitioner's itemized date-stamped receipt, the evidence is convincing that the application papers deposited on 14 June, 2004, included, *inter alia*, one (1) page of specification, including one (1) claim, and four (4) sheets of drawings which were subsequently misplaced in the PTO.

Therefore, the application was complete on filing and entitled to a filing date of 14 June, 2004.

In view of the above, the petition is granted. No petition fee is required.

The application file is being forwarded to the Office of Initial Patent Examination for further processing with a filing date of 14 June, 2004, using, *inter alia*, the one (1) page of specification, including one (1) claim, and four (4) sheets of drawings supplied with the present petition.

Telephone inquiries specific to this matter should be directed to the undersigned at (571) 272-3231.

D Wood

Douglas I. Wood
Senior Petitions Attorney
Office of Petitions

UNITED STATES PATENT AND TRADEMARK OFFICE

Commissioner for Patents
United States Patent and Trademark Office
P.O. Box 1450
Alexandria, VA 22313-1450
www.uspto.gov
OIW 03-05

Paper No. 3

HOFFMAN & BARON, LLP
6900 JERICHO TURNPIKE
SYOSSET NY 11791

COPY MAILED

MAR 29 2005

OFFICE OF PETITIONS

In re Application of	:	
David Lo	:	
Application No. 29/168,287	:	DECISION GRANTING PETITION
Filed: 3 May, 2004	:	
Attorney Docket No. 717-938 DES	:	

This is a decision on the petition under 37 CFR 1.10(e)[1] filed on 12 November, 2004, requesting that the above-identified design application be accorded a filing date of 3 May, 2004.

Petitioners allege that the application was deposited in "Express Mail" service with the U.S. Postal Service on 3 May, 2004. In support, petitioner provided a copy of the Express Mail Customer

---

[1] 37 CFR 1.10(e) provides that:

Any person mailing correspondence properly addressed to the Office with sufficient postage utilizing "Express Mail Post Office to Addressee" service of the USPS but not received by the Office, may petition the Commissioner to consider such correspondence filed in the Office on the USPS deposit date, provided that:

(1) The petition is filed promptly after the person becomes aware that the Office has no evidence of receipt of the correspondence;

(2) The number of the "Express Mail" mailing label was placed on the paper(s) or fee(s) that constitute the correspondence prior to the original mailing by "Express Mail";

(3) The petition includes a copy of the originally deposited paper(s) or fee(s) that constitute the correspondence showing the number of the "Express Mail" mailing label thereon, a copy of any returned postcard receipt, a copy of the "Express Mail" mailing label showing the "date-in," a copy of any other official notation by the USPS relied upon to show the date of deposit, and, if the requested filing date is a date other than the "date-in" on the "Express Mail" mailing label or other official notation entered by the USPS, a showing pursuant to paragraph (d)(3) of this section that the requested filing date was the date the correspondence was deposited in the "Express Mail Post Office to Addressee" service prior to the last scheduled pickup for that day; and

(4) The petition includes a statement which establishes, to the satisfaction of the Commissioner, the original deposit of the correspondence and that the copies of the correspondence, the copy of the "Express Mail" mailing label, the copy of any returned postcard receipt, and any official notation entered by the USPS are true copies of the originally mailed correspondence, original "Express Mail" mailing label, returned postcard receipt, and official notation entered by the USPS.

Label No. EL747202305USUS. The same Express Mail receipt number was referred to on the itemized Provisional Application Transmittal sheet submitted with the present petition. Petitioners have provided a copy of the application (including two (2) pages of specification), and 10 sheets of drawings.

Although the "date-in" on the Express Mail Label has not been completed, a search of the USPS Internet Track & Confirm Database report reveals that this Express Mail Label No. was accepted by the USPS on 3 May, 2004.

The Office considers the date the paper or fee is shown to have been deposited as "Express Mail" to be the "Date In" on the Express Mail label or any other official notation by the USPS.[2] That is the date that verifies that the package was actually mailed. In view of the above, the evidence is convincing that the application was deposited as "Express Mail" with the USPS on 3 May, 2004.

In view of the above, the petition is granted. No petition fee is due and none has been charged.

The application will be processed with a filing date of 3 May, 2004, using the copies of the application papers supplied with the present petition.

The application is being forwarded to the Office of Initial Patent Examination for further processing with a filing date of 3 May, 2004, using the application papers supplied with the present petition.

Telephone inquiries specific to this matter should be directed to the undersigned at 571 272-3231.

DWood

Douglas I. Wood
Senior Petitions Attorney
Office of Petitions

---

[2] MPEP 513.

UNITED STATES PATENT AND TRADEMARK OFFICE

COMMISSIONER FOR PATENTS
UNITED STATES PATENT AND TRADEMARK OFFICE
P.O. BOX 1450
ALEXANDRIA, VA 22313-1450
www.uspto.gov

THOMAS W. EPTING
LEATHERWOOD WALKER TODD & MANN, P.C.
300 EAST MCBEE AVENUE, SUITE 500
P.O. BOX 87
GREENVILLE, SC 29601

COPY MAILED
FEB 21 2006
OFFICE OF PETITIONS

In re Application of :
Loggins, et al. : DECISION ON PETITION
Application No. 29/168,289 :
Filed: June 11, 2004 :
Atty. Dkt. No.: 132267.1 :

This decision is in response to the "PETITION TO AFFORD A FILING DATE AS OF THE EXPRESS MAIL DEPOSIT DATE," filed January 27, 2006. This petition is being treated under 37 CFR 1.10(e) to accord the above-identified application a filing date of June 11, 2004.

Petitioners allege that the instant application was deposited in Express Mail service June 11, 2004. As supporting evidence, petitioners have provided a copy of an Express Mail label bearing tracking number EV271810483US and a "date-in" of June 11, 2004.

In view of the above, the petition under 37 CFR 1.10(e) to accord the above-identified application a filing date of June 11, 2004 is hereby **GRANTED**.

No fee is due in connection with this petition.

This application is being forwarded to the Office of Initial Patent Examination for further processing with a filing date of June 11, 2004 and for processing of the fees.

Telephone inquiries regarding this decision should be directed to the undersigned at (571) 272-3205.

Alesia M. Brown
Petitions Attorney
Office of Petitions

UNITED STATES PATENT AND TRADEMARK OFFICE

COMMISSIONER FOR PATENTS
UNITED STATES PATENT AND TRADEMARK OFFICE
P.O. BOX 1450
ALEXANDRIA, VA 22313-1450
www.uspto.gov

THOMAS W. EPTING
LEATHERWOOD WALKER TODD & MANN, P.C.
300 EAST MCBEE AVENUE, SUITE 500
P.O. BOX 87
GREENVILLE, SC 29601

COPY MAILED
JUL 28 2006
OFFICE OF PETITIONS

In re Application of :
Loggins, et al. : DECISION ON PETITION
Application No. 29/168,289 :
Filed: June 11, 2004 :
Atty. Dkt. No.: 132267.1 :

This decision is in response to the petition filed June 27, 2006 for acceptance of figure 1 as part of the original disclosure of application.

A petition under 37 CFR 1.10 was filed on October 25, 2005 and granted February 21, 2006 in the above-identified application. A Notice of Omitted Items (Notice) was mailed April 25, 2006 indicating that Figure 1 appeared to have been omitted from the application as originally filed.

As petitioners have previously established pursuant to 37 CFR 1.10 receipt of the application papers, including Figure 1, in the petition submitted October 25, 2005, the above-identified application is entitled to a filing date of June 11, 2004 with Figure 1 included as part of the application papers.

In view thereof, the petition is hereby **GRANTED**.

No fee is due in connection with this petition.

This application is being forwarded to the Office of Initial Patent Examination for further processing with a filing date of June 11, 2004 with Figure 1 as part of the application papers as filed.

Telephone inquiries regarding this decision should be directed to the undersigned at (571) 272-3205.

Alesia M. Brown
Petitions Attorney
Office of Petitions

UNITED STATES PATENT AND TRADEMARK OFFICE

Commissioner for Patents
United States Patent and Trademark Office
P.O. Box 1450
Alexandria, VA 22313-1450
www.uspto.gov

COPY MAILED

MAY 1 1 2006

OFFICE OF PETITIONS

Michael J. Keenan
Nixon & Vanderhye, P.C.
901 North Glebe Road
Arlington, VA 22203

In re Application of :
Tokhiyuki Kita :
Application No. 29/168,290 : ON PETITION
Deposited: June 17, 2004 :
Title of Invention: Television Set :

This is a decision on the petition filed August 5, 2005, requesting that a design application entitled "Television Set" be assigned an application number and accorded a filing date of June 17, 2004.

In the present petition, applicant contends that the above identified application was deposited on June 17, 2004. The papers were purportedly assigned utility application number 10/869,045. A review of application 10/869,045 shows that it is a duplicate of application 10/868,847 now patent 7004086. Petitioner contends that papers entitled to a design application filing date were submitted on June 17, 2004.

In support of applicant's assertion, applicant submitted a copy of a post card receipt with a date stamp of June 17, 2004, 1 pages of specification,1 claim, and 6 sheets of drawings. The postcard receipt also shows application number 10/869,045

Upon review of the evidence and the circumstances of this case, the petition is granted. The application papers have been assigned application No. 29/168,290. No petition fee is required.

Since the original application papers(specification, claim and drawings) cannot be located in the USPTO, the duplicate papers supplied on October 21, 2005 will be used for processing and examination purposes.

All further correspondence concerning the application under 37 CFR 1.53(b) should be directed to application No. 29/168,290, not application 10/869,045.

The application will be returned to the Office of Initial Patent Examination for further processing with a **filing date of June 17, 2004**, using the copy of the original application papers submitted on October 21, 2005.

Telephone inquiries related to this decision may be directed to the undersigned at (571) 272-3215.

Charlema R. Grant

Charlema R. Grant
Petitions Attorney
Office of Petitions

UNITED STATES PATENT AND TRADEMARK OFFICE

Commissioner for Patents
United States Patent and Trademark Office
P.O. Box 1450
Alexandria, VA 22313-1450
www.uspto.gov

Paper No. 3

Andrew Parker, Senior Vice President
Sharper Image Corporation
650 Davis Street
San Francisco, CA 94111

COPY MAILED

AUG 2 7 2003

OFFICE OF PETITIONS

In re Application of
Tristan M. Christianson
Application No. 29/168,292
Filed: May 19, 2003
Attorney Docket No. SI-777

DECISION ON PETITION

This is a decision on the petition under 37 CFR 1.10(e), filed August 8, 2003, requesting that a design application entitled "Battery Pack" be assigned an application number and accorded a filing date of May 19, 2003.

Petitioner alleges that the application was deposited in Express Mail service with the United States Postal Service (USPS) on May 19, 2003. In support of the allegation, petitioner provided a copy of the Express Mail label, receipt No. EU428710978US, showing a date-in of May 19, 2003. The same Express Mail receipt number was referred to in the copy of the original application papers submitted with the present petition.

The Office considers the date the paper or fee is shown to have been deposited as "Express Mail" to be the "date-in" on the Express Mail label. See MPEP 513. This is the date that verifies that the package was actually mailed. In view of the above, the evidence is convincing that the application was deposited as "Express Mail" with the USPS on May 19, 2003.

Accordingly, the petition is **granted**.

Application No. 29/168,292

The filing fee will be charged to Deposit Account No. 50-2345, as authorized by petitioner.

This application file will be forwarded to the Office of Initial Patent Examination for processing as a new design application, No. 29/168,292, with the filing date of May 19, 2003.

Telephone inquiries should be directed to the undersigned at (703) 306-5589.

Christina Tartera Donnell

Christina Tartera Donnell
Senior Petitions Attorney
Office of Petitions

UNITED STATES PATENT AND TRADEMARK OFFICE

JUN 10 2004

Commissioner for Patents
United States Patent and Trademark Office
P.O. Box 1450
Alexandria, VA 22313-1450
www.uspto.gov

#6

MARTIN FAIER, ESQ.
FAIER & FAIER
SUITE 600
566 WEST ADAMS STREET
CHICAGO, IL 60661

In re Application of	:
Kerry Linz	:
Serial No.: 29/168,541	: PETITION DECISION
Filed: October 3, 2002	:
Attorney Docket No.: 7232	:

This is a decision on applicant's petition to revive patent application under 37 CFR 1.137(a), which is being treated as a Petition under 37 CFR 1.181 submitted March 24, 2004, to revive an unavoidably abandoned application.

This application became abandoned for failure to respond to the Notice of Allowance mailed October 20, 2003, which set a three-month statutory period to submit the Issue Fee and formal drawings. As no response was received by January 20, 2004, a Notice of Abandonment was mailed March 8, 2004. Applicant then filed this petition.

Applicant has submitted that the abandonment of the application was unavoidable, as applicant did not receive the Notice of Allowance. Copies of the docket record were submitted, showing that the Notice was not received. Therefore, as applicant did not receive the Notice, the application was abandoned in error.

As there are no fees associated with Petitions granted under 37 CFR 1.181, the Petition fee and the Terminal Disclaimer fee will not be charged to applicant's Deposit Account. Applicant is advised that formal drawings are still required, as drawings submitted by facsimile cannot be used for patent printing purposes. Therefore, the Notice will be re-mailed to applicant.

Applicants petition is **GRANTED.**

The application will be promptly forwarded to the Examiner re-mailing of the Notice of Allowance in due course.

Should there be any questions with respect to this decision, please contact Sandra Morris; by mail addressed to: Director, Technology Center 3700/2900, P.O. Box 1450, Alexandria, VA 22313-1450; or by telephone at (571) 272-2622.

John Kittle
Director, Technology Center 3700/2900

UNITED STATES PATENT AND TRADEMARK OFFICE

Commissioner for Patents
United States Patent and Trademark Office
P.O. Box 1450
Alexandria, VA 22313-1450
www.uspto.gov

Martin Faier, Esq.
Faier & Faier
Suite 600
566 West Adams Street
Chicago, IL 60661

COPY MAILED

SEP 29 2005

OFFICE OF PETITIONS

In re Application of

Linz, et al.

Application No. 29/168,541

Filed: October 3, 2002

Attorney Docket No. 7232

DECISION ON PETITION

This is a decision on the petition under 37 CFR §1.137(b), August 23, 2005, to revive the above-identified application.

The petition is **dismissed**.

Any request for reconsideration of this decision must be submitted within TWO (2) MONTHS from the mail date of this decision. Extensions of time under 37 CFR 1.136(a) are permitted. The reconsideration request should include a cover letter entitled "Renewed Petition" under 37 CFR 1.137(b)."

This application became abandoned for failure to respond in a timely manner to the Notice of Allowance and Issue Fee Due and Notice of Allowability, both mailed August 4, 2004. The notices allowed statutory periods for reply of three months from their mailing dates. No reply was received within the allowable period, and the application became abandoned on November 5, 2004. A Notice of Abandonment was mailed on June 17, 2005.

Effective December 1, 1997, the provisions of 37 CFR 1.137(b) now provide that where the delay in reply was unintentional, a petition may be filed to revive an abandoned application or a lapsed patent pursuant to 37 CFR 1.137(b). A grantable petition pursuant to 37 CFR 1.137(b) must be accompanied by:

(1) the required reply, unless previously filed. In a non-provisional application abandoned for failure to prosecute, the required reply may be met by the filing of a continuing application. In an application or patent, abandoned or lapsed for failure to pay the issue fee, or any portion thereof, the required reply must be the payment of the issue fee or any outstanding balance thereof.

(2) the petition fee as set forth in 37 CFR 1.17(m);

(3) a statement that the entire delay in filing the required reply from the due date for the reply until the filing of a grantable petition pursuant to 37 CFR 1.137(b) was unintentional. The Commissioner may require additional information where there is a question whether the delay was unintentional; and

(4) any terminal disclaimer (and fee set forth in 37 CFR 1.20(d)) required pursuant to 37 CFR 1.137(d).

The instant renewed petition does not satisfy the requirements of items (1) and (4) above.

As to item (1), corrected drawings, as required by the Notice of Allowability, were not found with petition papers. Any renewed petition filed must be accompanied by corrected drawings satisfying the requirements set forth in the Notice of Allowability.

As to item (4), the terminal disclaimer was not found with the petition papers. As the instant application is s design application, a terminal disclaimer is required pursuant to 37 CFR 1.137(d). Any renewed petition filed must be accompanied by the completed terminal disclaimer form, which is enclosed for petitioner's convenience. Pursuant to 37 CFR 1.137(d), the terminal disclaimer must dedicate to the public a terminal part of the term of any patent granted from this application that is equivalent to the period of abandonment of the application.

Further correspondence with respect to this matter should be addressed as follows:

By mail: Mail Stop Petitions
Commissioner for Patents
United States Patent and Trademark Office
Box 1450
Alexandria, VA 22313-1450

By facsimile: (571) 273-8300

Telephone inquiries concerning this matter may be directed to the undersigned at (571) 272-3222.

Kenya A. McLaughlin

Kenya A. McLaughlin
Petitions Attorney
Office of Petitions

Enclosure: "Terminal Disclaimer to Accompany Petition"

UNITED STATES PATENT AND TRADEMARK OFFICE

Commissioner for Patents
United States Patent and Trademark Office
P.O. Box 1450
Alexandria, VA 22313-1450
www.uspto.gov

Martin Faier, Esq.
Faier & Faier
Suite 600
566 West Adams Street
Chicago, IL 60661

COPY MAILED

DEC 01 2005

OFFICE OF PETITIONS

In re Application of

Linz, et al.

Application No. 29/168,541

Filed: October 3, 2002

Attorney Docket No. 7232

DECISION ON PETITION

This is a decision on the renewed petition under 37 CFR §1.137(b), November 21, 2005, to revive the above-identified application.

The renewed petition is **granted**.

This application became abandoned for failure to respond in a timely manner to the Notice of Allowance and Issue Fee Due and Notice of Allowability, both mailed August 4, 2004. The notices allowed statutory periods for reply of three months from their mailing dates. No reply was received within the allowable period, and the application became abandoned on November 5, 2004. A Notice of Abandonment was mailed on June 17, 2005. A petition under 37 CFR 1.137(b) was filed on August 23, 2005, and dismissed by a decision mailed September 29, 2005.

The issue fee was received on August 23, 2005.

The terminal disclaimer was received on November 21, 2005.

The application is being forwarded to the Office of Patent Publications for further processing.

Telephone inquiries concerning this decision may be directed to the undersigned at (571) 272-3222.

Kenya A. McLaughlin

Kenya A. McLaughlin
Petitions Attorney
Office of Petitions

UNITED STATES PATENT AND TRADEMARK OFFICE

Commissioner for Patents
United States Patent and Trademark Office
P.O. Box 1450
Alexandria, VA 22313-1450
www.uspto.gov

DEC 15 2004

CHARLES E. MILLER
DICKSTEIN SHAPIRO MORIN & OSHINSKY LLP
1177 AVENUE OF THE AMERICAS
41ST FLOOR
NEW YORK, NY 10036-2714

In re Application of	:
Kenneth B. Dunbar	:
Serial No.: 29/168,635	: PETITION DECISION
Filed: October 4, 2002	:
Attorney Docket No.: A7050.0001	:

This is a decision on applicant's Petition under 37 CFR 1.137(b) submitted November 8, 2004, to revive an unintentionally abandoned application.

This application became abandoned for failure to respond to the Office action mailed November 26, 2003, which set a one-month shortened statutory period to respond. As no response was received by December 26, 2003, a Notice of Abandonment was mailed September 20, 2004. Applicant then filed this petition.

A grantable petition under 37 CFR 1.137(b), as revised December 1, 1997, requires four items: (1) a petition and petition fee; (2) a complete response if not earlier made; (3) a statement that the entire period of delay in prosecution was unintentional; and (4) a terminal disclaimer and disclaimer fee. The requirement for a terminal disclaimer has been waived, as the petition was submitted within two months of the mailing of the Notice of Abandonment.

Applicant's petition is **GRANTED.**

The application will be forwarded to the Examiner for consideration of applicant's response in due course.

Should there be any questions with respect to this decision, please contact Sandra Morris; by mail addressed to: Director, Technology Center 3700/2900, P.O. Box 1450, Alexandria, VA 22313-1450; or by telephone at (571) 272-2622.

John Kittle
Director, Technology Center 3700/2900

UNITED STATES PATENT AND TRADEMARK OFFICE

COMMISSIONER FOR PATENTS
UNITED STATES PATENT AND TRADEMARK OFFICE
P.O. BOX 1450
ALEXANDRIA, VA 22313-1450
www.uspto.gov

DICKSTEIN SHAPIRO MORIN & OSHINSKY LLP
1177 AVENUE OF THE AMERICAS (6TH AVENUE)
41ST FLOOR
NEW YORK, NY 10036-2714

FEB 1 2 2005

In re Application of
Kenneth Barrie Dunbar
Serial No.: 29/168,635
Filed: October 4, 2002
Attorney Docket No.: A7050.001/P001

: PETITION DECISION

This is a decision on applicant's Petition under 37 CFR 1.137(b) received November 8, 2004, to revive an unintentionally abandoned application.

This application became abandoned for failure to fully respond to Office action mailed November 26, 2003, which set a one-month shortened to respond. As applicant did not submit a response by December 26, 2003, a Notice of Abandonment was mailed September 20, 2004. Applicant then filed this petition.

A grantable petition under 37 CFR 1.137(b), as revised December 1, 1997, requires four items: (1) a petition and petition fee; (2) a complete response if not earlier made; (3) a statement that the entire period of delay in prosecution was unintentional; and (4) a terminal disclaimer and disclaimer fee. The requirement for a terminal disclaimer has been waived, as the petition was submitted within two months of the mailing of the Notice of Abandonment.

Applicant's petition is **GRANTED.**

As the application was already abandoned, the Petition for Extension of Time under 37 CFR 1.136(a) is dismissed. Therefore, the $1040.00 five month extension of time fee will be credited to applicant's Deposit Account 50-2215, as directed.

The application will be forwarded to the Examiner for evaluation of applicant's response in due course.

Should there be any questions with respect to this decision, please contact Sandra Morris; by mail addressed to: Director, Technology Center 1700/2900, P.O. Box 1450, Alexandria, VA 22313-1450; or by telephone at (571) 272-2622.

JMStone

Jacqueline Stone
Director, Technology Center 1700/2900

UNITED STATES PATENT AND TRADEMARK OFFICE

Commissioner for Patents
United States Patent and Trademark Office
P.O. Box 1450
Alexandria, VA 22313-1450
www.uspto.gov

JUN 10 2004

#14

RANDALL B BATEMAN
RANDALL B BATEMAN, PC
10 W 100 SOUTH, SUITE 425
P.O. BOX 1319
SALT LAKE CITY, UT 84110-1319

In re Application of	:
Kent F Beck et al.	:
Serial No.: 29/168,959	: PETITION DECISION
Filed: October 20, 2002	:
Attorney Docket No.: 2399.ZEVX.DS	:

This is a decision on applicants' Petition for Withdrawal of Notice of Abandonment, which is being treated as a petition under 37 CFR 1.181 submitted April 12, 2004, to revive an unavoidably abandoned application.

This application became abandoned for failure to respond to the Office action mailed May 7, 2003, which set a one-month shortened statutory period to respond. As no response was received by June 9, 2003, a Notice of Abandonment was mailed April 6, 2004. Applicant then filed this petition.

Applicant has submitted that the response was timely filed on June 9, 2003, and has submitted copies of the response with a Certificate of Mailing and a Post Card receipt that show that the response was timely filed. Applicant's response was eventually associated with the application. Therefore, it is clear that applicant timely responded to the Office action, and the application was abandoned in error.

Applicants' petition is **GRANTED.**

The application will be promptly forwarded to the Examiner for evaluation of applicant's response in due course.

Should there be any questions with respect to this decision, please contact Sandra Morris; by mail addressed to: Director, Technology Center 3700/2900, P.O. Box 1450, Alexandria, VA 22313-1450; or by telephone at (571) 272-2622.

John Kittle
Director, Technology Center 3700/2900

UNITED STATES PATENT AND TRADEMARK OFFICE

COMMISSIONER FOR PATENTS
UNITED STATES PATENT AND TRADEMARK OFFICE
P. O. BOX 1450
ALEXANDRIA, VA 22313-1450
www.uspto.gov
DIW 05-03

Paper No. 6

STEVEN J. GROSSMAN
GROSSMAN, TUCKER, PERREAULT & PFLEGER, PLLC
55 SOUTH COMMERCIAL STREET
MANCHESTER NH 03101

COPY MAILED

MAY 1 5 2003

OFFICE OF PETITIONS

In re Application of	:
Ulrich Zucker	: DECISION DISMISSING
Application No. 29/168,993	: PETITION UNDER
Filed: 11 October, 2002	: 37 CFR 1.55(c)
Attorney Docket No. LIP022	: AS MOOT

This is a decision on the petition under 37 CFR 1.55(c), filed on 3 March, 2003, requesting acceptance of an unintentionally delayed claim under 35 USC 119 (a) - (d) for benefit of the filing date of a foreign application.

The petition is **dismissed as moot** for the reasons stated below.

37 CFR 1.55(a) indicates that the time periods set forth in therein do not apply if the later filed application is: (A) a design application; or (b) an application filed before 29 November, 2000.[1]

Therefore, a petition for acceptance of a claim for late priority under 37 CFR 1.55(c) is not applicable to design applications.

Since the present nonprovisional application is a design application, the provisions of 37 CFR 1.55(c) for acceptance of a late claim for foreign priority do not apply to the subject nonprovisional application. Accordingly, the petition is dismissed as involving a moot issue.

In view of the dismissal of the instant petition as moot, the petition fee will not be charged.

The application is being forwarded to Technology Center 2900 for examination in due course.

Any inquiries directly pertaining to this matter may be directed to Senior Petitions Attorney Douglas I. Wood at (703) 308-6918.

Beverly M. Flanagan
Supervisory Petitions Examiner
Office of Petitions

UNITED STATES PATENT AND TRADEMARK OFFICE

COMMISSIONER FOR PATENTS
UNITED STATES PATENT AND TRADEMARK OFFICE
P.O. BOX 1450
ALEXANDRIA, VA 22313-1450
www.uspto.gov

Paper No. 9

BLAKELY SOKOLOFF TAYLOR & ZAFMAN LLP
12400 WILSHIRE BLVD., 7TH FLOOR
LOS ANGELES CA 90025-1026

COPY MAILED

JUL 2 5 2003

OFFICE OF PETITIONS

In re Application of
Laity et al.
Design Application No. 29/169,201
Filed: October 15, 2002
Attn'y Docket No.: 42P12206D2

DECISION DISMISSING PETITION

This is a decision on the petition filed May 1, 2003, requesting under 37 CFR 1.182 that the RCE filed May 11, 2003, be converted to a continuing prosecution application and that any excess fees be refunded.

The petition is **dismissed.** Any request for reconsideration must be filed within TWO MONTHS of this decision. See 37 CFR 1.181(f). Extensions of time under 37 CFR 1.136(a) or (b) are not available.

A Notice of Allowance was mailed January 23, 2003 which required payment of the $470 issue fee on or before April 23, 2003 to avoid abandonment of the application. However, on March 11, 2003, applicant filed a request for continued examination (RCE) under 37 CFR 1.114, and an IDS, and submitted a check for $330, and an additional $420 to cover the balance owed for an RCE (for a utility application RCE request) was charged against counsel's deposit account. On April 2, 2003, applicant was notified that the RCE filing was improper as an RCE under the rule is not applicable to applications for design patents.

The instant petition seeks conversion of the improper RCE to a CPA filing under 37 CFR 1.53(d), and refund of the excess fees paid.

Unfortunately, the request relief is not properly grantable. Since the inception of RCE practice, the USPTO has indicated that a request for conversion of an improper RCE request to a CPA would not be favorably entertained as there is a fundamental difference between seeking the continued examination of the same application for patent, and the filing of a new, continuing application for patent. See 65 *F.R.* 14865 at 14870 (March 20, 2000), response to Comment 2; and the final RCE rulemaking, 65 *F.R.* 50092 at 50097 (Aug. 16, 2000). It should be noted that Section 4405(b)(2) of the American Inventors Protection Act of 1999 expressly excluded design applications from requests for continued examination, and this exclusion was incorporated into 37 CFR 1.114 (at § (d)(4),now § (e)(4)) from the onset.

Furthermore, petitioner is advised that the USPTO will not consider an extraordinary remedy under 37 CFR § 1.182 or § 1.183, when the applicable statutes and regulations already provide an avenue for obtaining relief. See Cantello v. Rasmussen, 220 USPQ 664, 664 (Comm'r Pat. 1982). Since the RCE request was an improper reply to the Notice of Allowance, this application became abandoned by operation of law at midnight on April 23, 2003, for failure to pay the issue fee. Nevertheless, this may be remedied by filing a petition (and fee) for acceptance of an unintentionally delayed payment of the issue fee under 35 USC

41(a)(7) and 37 CFR 1.137(b), to revive the above-identified application for continuity with the CPA request filed May 1, 2003.

Where the delay in reply was unintentional, a petition may be filed to revive an abandoned application pursuant to 37 CFR 1.137(b). A grantable petition pursuant to this paragraph must be accompanied by:

> (1) The required reply, unless previously filed. In a nonprovisional or design application abandoned for failure to prosecute, the required reply may be met by the filing of a continuing application. In an application or patent, abandoned or lapsed for failure to pay the issue fee or any portion thereof, the required reply must be the payment of the issue fee or any outstanding balance thereof;
> (2) The petition fee as set forth in § 1.17(m);
> (3) A statement that the entire delay in filing the required reply from the due date for the reply until the filing of a grantable petition pursuant to this paragraph was unintentional. The Commissioner may require additional information where there is a question whether the delay was unintentional; and
> (4) A terminal disclaimer for an application filed before June 8, 1995, or for a design application (and fee as set forth in § 1.20(d)) required pursuant to paragraph (c) of this section.

As explained in MPEP 711.03(c), subsection III(A)(1), applications abandoned for non payment of the issue fee require payment of the issue fee as a condition of revival, even if the application is being revived for continuity purposes. Note further that a terminal disclaimer under 37 CFR 1.137(c) is likewise required. Petitioner may request that the fees paid to for the RCE be applied towards the fees owed for the CPA, and forthcoming petition, issue fee, and terminal disclaimer. While petitioner may also seek revival under 37 CFR 1.137(a), this course of action cannot be recommended under the circumstances of this case. See MPEP 711.03(c), subsection III(C)(2): delay resulting from the improper application of a rule is not normally considered to be unavoidable delay.

Further correspondence with respect to this matter should be addressed as follows:

By mail: Mail Stop PETITION
Commissioner for Patents
Post Office Box 1450
Alexandria, VA 22313-1450

By FAX: (703) 308-6916
Attn: Office of Petitions

By hand: Crystal Plaza Four, Suite 3C23
2201 S. Clark Place
Arlington, VA

Telephone inquiries related to this decision may be directed to the undersigned at (703) 305-1820.

Brian Hearn

Brian Hearn
Senior Petitions Examiner
Office of Petitions
Office of the Deputy Commissioner
for Patent Examination Policy

UNITED STATES PATENT AND TRADEMARK OFFICE

Commissioner for Patents
United States Patent and Trademark Office
P.O. Box 1450
Alexandria, VA 22313-1450
www.uspto.gov

Paper No. 15

Mark C. Van Ness
Blakely, Sokoloff, Taylor & Zafman
Seventh Floor
12400 Wilshire Boulevard
Los Angeles CA 90025-1030

COPY MAILED

MAY 1 2 2004

OFFICE OF PETITIONS

In re Design Application of :
Laity :
Application No. 29/169,201 : DECISION ON PETITION
Filed: October 15, 2002 (CPA filed 5/1/03) :
For: COMMUNICATIONS MODULE :

This is a decision on the petition under 37 CFR 1.137(b) filed September 29, 2003, to revive the above-identified prior application.

The petition is **granted**.

The terminal disclaimer filed on September 29, 2003, is accepted for the period of abandonment of the prior application: 5 months.

The prior application became abandoned for failure to pay the issue fee on or before April 23, 2003, as required by the Notice of Allowance (Notice) of January 23, 2003. See 35 U.S.C. § 151. While an RCE was filed March 11, 2003, such was not a proper reply to the Notice in the design application, as such is precluded by law. While a formal Notice of Abandonment has not been mailed, applicant was informed of the date and fact of abandonment by the decision of July 25, 2003, on the petition under 37 CFR 1.182 filed May 1, 2003, seeking conversion of the improper RCE to a CPA.

Applicant seeks revival for continuity with the CPA filed May 1, 2003, and while necessarily tendering the issue fee, is aware that no patent will issue to the prior application. The issue fee tendered in this application unfortunately cannot be applied to any issue fee falling due in the CPA as it is an entirely separate application.

This application is being revived for continuity with the CPA filed May 1, 2003. Continuity being attained by virtue of this decision, the prior application is again abandoned in favor of the CPA.

Any continuing application other than a continuing application filed under 37 CFR 1.53(d), (*i.e.*, other than a CPA) that claims benefit of this application under 35 U.S.C. § 120 or § 121 or § 365(c) must contain a copy of the terminal disclaimer. The copy of the terminal disclaimer must be filed with a cover letter requesting the terminal disclaimer be recorded on the continuing application. A copy of this decision should be attached to and referenced in the cover letter.

The $1300 petition fee (37 CFR 1.137(b)) , $110 terminal disclaimer fee, $470 issue fee, and $130 petition fee (37 CFR 1.182) have been charged, and the excess $420 RCE fee paid has been refunded, to deposit account 02-2666. The remainder of the previously paid RCE fee ($330) has been reapplied to the CPA filing fee.

This application is being returned to Technology Center 2911 to process the CPA and consider the IDS's of March 11 and May 1, 2003.

Any inquiries concerning this decision may be directed to the undersigned at (703) 305-1820.

Brian Hearn

Brian Hearn
Petitions Examiner
Office of Petitions
Office of the Deputy Commissioner
for Patent Examination Policy

UNITED STATES PATENT AND TRADEMARK OFFICE

Commissioner for Patents
United States Patent and Trademark Office
P.O. Box 1450
Alexandria, VA 22313-1450
www.uspto.gov

ALSTON & BIRD LLP
BANK OF AMERICA PLAZA
101 SOUTH TRYON STREET, SUITE 4000
CHARLOTTE NC 28280-4000

6/27/05

In re Application of
Edward L Weaver II
Serial No.: 29/169,429
Filed: November 27, 2002
Attorney Docket No.: 104035/254981

: PETITION DECISION

This is a decision on applicant's Petition under 37 CFR 1.137(b) submitted May 23, 2005, to revive an unintentionally abandoned application.

A review of the application shows that a Notice of Allowance was mailed July 29, 2003, setting a three month period of time to pay the Issue fee and submit formal drawings. The issue fee was submitted September 24, 2003; however, as no formal drawings were received by October 29, 2003, a Notice of Abandonment was mailed May 25, 2004. This petition followed.

A grantable petition under 37 CFR 1.137(b), as revised December 1, 1997, requires four items: (1) a petition and petition fee; (2) a complete response if not earlier made; (3) a statement that the entire period of delay in prosecution was unintentional; and (4) a terminal disclaimer and disclaimer fee.

Applicant's petition is **GRANTED.**

The application will be forwarded to Publications Branch to be issued into a patent in due course.

Should there be any questions with respect to this decision, please contact Sandra Morris; by mail addressed to: Director, Technology Center 1700/2900, P.O. Box 1450, Alexandria, VA 22313-1450; or by telephone at (571) 272-2622.

Jacqueline Stone
Director, Technology Center 1700/2900

Approved Jacqueline M. Stone

Jacqueline M. Stone, Director
Technology Center 1700

UNITED STATES PATENT AND TRADEMARK OFFICE

COMMISSIONER FOR PATENTS
UNITED STATES PATENT AND TRADEMARK OFFICE
P.O. BOX 1450
ALEXANDRIA, VA 22313-1450
www.uspto.gov

SNELL & WILMER
ONE ARIZONA CENTER
400 EAST VAN BUREN
PHOENIX, AZ 850040001

FEB 2 2005

In re Application of
Chris Allen
Serial No.: 29/169,501
Filed: October 18, 2002
Attorney Docket No.: 50655.0300

: PETITION DECISION

This is a decision on applicant's Petition under 37 CFR 1.181, filed on December 10, 2004 to revive an unintentionally abandoned application.

The petition is **DISMISSED**.

A review of the file history shows that the Office mailed a Notice of Allowance to applicant on January 28, 2004, giving applicant a three-month shortened statutory period in which to submit the Issue fee and a new Oath or Declaration. The Issue fee was received April 16, 2004; however, as the required corrected Oath or Declaration was not submitted by April 28, 2004, a Notice of Abandonment was mailed September 24, 2004; this petition followed.

Applicant has stated that the application was abandoned in error, as the Declaration was in fact proper, and an Application Data Sheet was submitted November 24, 2004. It is assumed that applicant is in fact addressing the response submitted November 24, 2003; however, there is no evidence of the Application data sheet ever being submitted. Furthermore, applicant was clearly advised in the Notice of Allowance that the Declaration was in fact not acceptable:

> "The declaration must identify the post office or mailing address of each inventor, and the residence if an inventor lives at a location that is different from where the inventor customarily receives mail, 37 CFR 1.63, MPEP 602, unless such information is supplied on an application data sheet in accordance with 37 CFR 1.76. A new declaration in compliance with 37 CFR 1.67(a) identifying this application by application number and filing date is required. See MPEP 602.01 and 602.02."

Therefore, applicant should submit proof that the Application Data Sheet was submitted to the Office before the application was officially abandoned on April 29,2004, for the petition to be granted under 37 CFR 1.181. If applicant cannot prove that it was submitted timely, applicant may wish to consider filing a Petition under 37 CFR 1.137(b) to revive the application.

Any renewed petition in order to be considered timely must be filed within TWO MONTHS of the date of mailing of this decision.

Should there be any questions with respect to this decision, please contact Sandra Morris; by mail addressed to: Director, Technology Center 1700/2900, P.O. Box 1450, Alexandria, VA 22313-1450; or by telephone at (571) 272-2622.

JMStone

Jacqueline Stone
Director, Technology Center 1700/2900

UNITED STATES PATENT AND TRADEMARK OFFICE

COMMISSIONER FOR PATENTS
UNITED STATES PATENT AND TRADEMARK OFFICE
P.O. BOX 1450
ALEXANDRIA, VA 22313-1450
www.uspto.gov

RECEIVED
APR 0 4 2005
SNELL & WILMER

HLS

SNELL & WILMER
ONE ARIZONA CENTER
400 EAST VAN BUREN
PHOENIX, AZ 850040001

FEB 2 2005

In re Application of
Chris Allen
Serial No.: 29/169,501
Filed: October 18, 2002
Attorney Docket No.: 50655.0300

: PETITION DECISION

This is a decision on applicant's Petition under 37 CFR 1.181, filed on December 10, 2004 to revive an unintentionally abandoned application.

The petition is **DISMISSED**.

A review of the file history shows that the Office mailed a Notice of Allowance to applicant on January 28, 2004, giving applicant a three-month shortened statutory period in which to submit the Issue fee and a new Oath or Declaration. The Issue fee was received April 16, 2004; however, as the required corrected Oath or Declaration was not submitted by April 28, 2004, a Notice of Abandonment was mailed September 24, 2004; this petition followed.

Applicant has stated that the application was abandoned in error, as the Declaration was in fact proper, and an Application Data Sheet was submitted November 24, 2004. It is assumed that applicant is in fact addressing the response submitted November 24, 2003; however, there is no evidence of the Application data sheet ever being submitted. Furthermore, applicant was clearly advised in the Notice of Allowance that the Declaration was in fact not acceptable:

> "The declaration must identify the post office or mailing address of each inventor, and the residence if an inventor lives at a location that is different from where the inventor customarily receives mail, 37 CFR 1.63, MPEP 602, unless such information is supplied on an application data sheet in accordance with 37 CFR 1.76. A new declaration in compliance with 37 CFR 1.67(a) identifying this application by application number and filing date is required. See MPEP 602.01 and 602.02."

Therefore, applicant should submit proof that the Application Data Sheet was submitted to the Office before the application was officially abandoned on April 29,2004, for the petition to be granted under 37 CFR 1.181. If applicant cannot prove that it was submitted timely, applicant may wish to consider filing a Petition under 37 CFR 1.137(b) to revive the application.

Any renewed petition in order to be considered timely must be filed within TWO MONTHS of the date of mailing of this decision.

NOTED FOR RECEIPT

file renewed petition to revive 5-30-05

Should there be any questions with respect to this decision, please contact Sandra Morris; by mail addressed to: Director, Technology Center 1700/2900, P.O. Box 1450, Alexandria, VA 22313-1450; or by telephone at (571) 272-2622.

J Stone

Jacqueline Stone
Director, Technology Center 1700/2900

UNITED STATES PATENT AND TRADEMARK OFFICE

Commissioner for Patents
United States Patent and Trademark Office
P.O. Box 1450
Alexandria, VA 22313-1450
www.uspto.gov

SNELL & WILMER
ONE ARIZONA CENTER
400 EAST VAN BUREN
PHOENIX, AZ 85004-0001

COPY MAILED

AUG 0 1 2005

OFFICE OF PETITIONS

In re Application of
Allen et al.
Application No. 29/169,501
Filed: October 18, 2002
Attorney Docket No. 50655.0300

Decision on Petition

This is a decision on the petition under 37 CFR 1.137(b), filed May 6, 2005, to revive the above-identified application.

The petition is **granted.**

The above-identified application became abandoned for failure to submit a proper declaration or application data sheet in reply to the Notice of Allowability mailed January 28, 2004, which set a shortened statutory period for reply of three (3) months. Accordingly, the above-identified application became abandoned on April 28, 2004. A Notice of Abandonment was mailed on September 24, 2004.

The instant petition requests revival of the application. Petitioner has met the requirements to revive the above-identified application pursuant to 37 CFR 1.137(b). Therefore, the petition is granted and the application is revived.

The petition fee of $750 and the statutory disclaimer fee of $65 has been charged to petitioner's deposit account. Petitioner's deposit account has not been charged for an extension of time.

The Office of Publications will be notified the application has been revived and will take steps to process the application into a patent.

Telephone inquiries may be directed to Petitions Attorney Steven Brantley at (571) 272-3203.

Charles Steven Brantley
Petitions Attorney
Office of Petitions

SPE RESPONSE FOR CERTIFICATE OF CORRECTION

Paper No.: _____

DATE : 7-18-05

TO SPE OF : ART UNIT 2911

SUBJECT : Request for Certificate of Correction on Patent No.: D496994

A response is requested with respect to the accompanying request for a certificate of correction.

Please complete this form and return with file, within **7** days to:
Palm location **7580, Certificates of Correction Branch – South Tower – 9A22**
If response is for an IFW, **return to employee (named below) via PUBSCofC Team in MADRAS.**
With respect to the change(s) requested, correcting Office and/or Applicant's errors, should the patent read as shown in the certificate of correction (COCIN)? No new matter should be introduced, nor should the scope or meaning of the claims be changed.

Thank You For Your Assistance

Ennis Young
Certificates of Correction Branch
Tel. No. 703-305-8309

The request for issuing the above-identified correction(s) is hereby:
Note your decision on the appropriate box.

- ☑ **Approved** — All changes apply.
- ☐ **Approved in Part** — Specify below which changes **do not** apply.
- ☐ **Denied** — State the reasons for denial below.

Comments:
In the future, please check examiner's art unit on Employee Locator before sending message. I have been this examiner's SPE for 3 years and just received this message.

Gary D. Walton — SPE
2915 — Art Unit

UNITED STATES PATENT AND TRADEMARK OFFICE

COMMISSIONER FOR PATENTS
UNITED STATES PATENT AND TRADEMARK OFFICE
P.O. BOX 1450
ALEXANDRIA, VA 22313-1450
www.uspto.gov

5/13/05

R. William Reinsmith
Murtha Cullina LLP
CityPlace I, 29th Floor
185 Asylum Street
Hartford CT 06103

In re Application of
Daniel P. Glassman
Serial No.: 29/169,808
Filed: October 28, 2004
Attorney Docket No.: WORD CASE 1-DESIGN

: PETITION DECISION

This is in response to applicant's Petition for Withdrawal Holding of Abandonment under 37 CFR 1.181, filed March 29, 2004, and again March 9, 2005, based on having responded to the Office action. The delay in acting upon this petition is regretted; however, the first copy of the petition was never associated with the application.

A review of the file history shows that a Notice of Allowance was mailed July 18, 2003, setting a three month statutory period to pay the Issue fee. As no response was received by October 20, 2003, a Notice of Abandonment was mailed on March 10, 2004.

Applicant has stated that the Issue fee was timely paid on October 8, 2003, and has included a copy of the Issue fee transmittal with a Certificate of Mailing date of October 8, 2003, as well as a return receipt post card, stamped by the Office on October 10, 2003. While this was not associated with the application, it is clear that the response was timely filed, and the Office in error abandoned the application.

Applicant's petition is **GRANTED.**

The application will be promptly forwarded to Publications to be printed as a patent in due course.

Should there be any questions with respect to this decision, please contact Sandra Morris; by mail addressed to: Director, Technology Center 1700/2900, P.O. Box 1450, Alexandria, VA 22313-1450; or by telephone at (571) 272-2622.

JMStone

Jacqueline Stone
Director, Technology Center 1700/2900

UNITED STATES PATENT AND TRADEMARK OFFICE

UNITED STATES DEPARTMENT OF COMMERCE
United States Patent and Trademark Office
Address: COMMISSIONER FOR PATENTS
P.O. Box 1450
Alexandria, Virginia 22313-1450
www.uspto.gov

APPLICATION NO.	FILING DATE	FIRST NAMED INVENTOR	ATTORNEY DOCKET NO.	CONFIRMATION NO.
29/170,036	10/31/2002	Peter Pfeiffer	038739.16546US	9171

23911 7590 08/25/2003
CROWELL & MORING LLP
INTELLECTUAL PROPERTY GROUP
P.O. BOX 14300
WASHINGTON, DC 20044-4300

EXAMINER
JACKSON, MARCUS A

ART UNIT	PAPER NUMBER
2911	11

DATE MAILED: 08/25/2003

Please find below and/or attached an Office communication concerning this application or proceeding.

The request for deferral/suspension of action under 37 CFR 1.103 has been approved.

UNITED STATES PATENT AND TRADEMARK OFFICE

COMMISSIONER FOR PATENTS
UNITED STATES PATENT AND TRADEMARK OFFICE
WASHINGTON, D.C. 20231
www.uspto.gov

DONALD D. EVENSON
CROWELL & MORING, LLP
P.O. BOX 14300
WASHINGTON, DC 20044-4300

In re Application of	:	
Peter Pfeiffer	:	
Application No. 29/170,036	:	PETITION DECISION
Filed: October 31, 2002	:	
Attorney Docket No. 038739.16546US	:	

Pursuant to applicant's petition filed on February 03, 2003, action by the Office is suspended on this application under 37 CFR 1.103(a) for a period of 6 months. At the end of this period, applicant is required to notify the examiner and request continuance of prosecution or a further suspension. See MPEP § 709.

Should there be any questions with regard to this letter please contact James Gandy, by letter addressed to Technology Center 2900, P.O. Box 1450 Alexandria, VA 22313-1450, or by telephone at (703) 305-3264.

James Gandy
Design Patent Practice Specialist
Technology Center 2900

UNITED STATES PATENT AND TRADEMARK OFFICE

UNITED STATES DEPARTMENT OF COMMERCE
United States Patent and Trademark Office
Address: COMMISSIONER FOR PATENTS
P.O. Box 1450
Alexandria, Virginia 22313-1450
www.uspto.gov

APPLICATION NO.	FILING DATE	FIRST NAMED INVENTOR	ATTORNEY DOCKET NO.	CONFIRMATION NO.
29/170,037	10/31/2002	Peter Pfeiffer	038739.16547US	9169

23911 7590 08/25/2003

CROWELL & MORING LLP
INTELLECTUAL PROPERTY GROUP
P.O. BOX 14300
WASHINGTON, DC 20044-4300

EXAMINER
JACKSON, MARCUS A

ART UNIT	PAPER NUMBER
2911	10

DATE MAILED: 08/25/2003

Please find below and/or attached an Office communication concerning this application or proceeding.

The request for deferral/suspension of action under 37 CFR 1.103 has been approved.

UNITED STATES PATENT AND TRADEMARK OFFICE

COMMISSIONER FOR PATENTS
UNITED STATES PATENT AND TRADEMARK OFFICE
WASHINGTON, D.C. 20231
www.uspto.gov

DONALD D. EVENSON
CROWELL & MORING, LLP
P.O. BOX 14300
WASHINGTON, DC 20044-4300

In re Application of	:	
Peter Pfeiffer	:	
Application No. 29/170,037	:	PETITION DECISION
Filed: October 31, 2002	:	
Attorney Docket No. 038739.16547US	:	

Pursuant to applicant's petition filed on February 04, 2003, action by the Office is suspended on this application under 37 CFR 1.103(a) for a period of 6 months. At the end of this period, applicant is required to notify the examiner and request continuance of prosecution or a further suspension. See MPEP § 709.

Should there be any questions with regard to this letter please contact James Gandy, by letter addressed to Technology Center 2900, P.O. Box 1450 Alexandria, VA 22313-1450, or by telephone at (703) 305-3264.

James Gandy
Design Patent Practice Specialist
Technology Center 2900

#8
cg

UNITED STATES PATENT AND TRADEMARK OFFICE

COMMISSIONER FOR PATENTS
UNITED STATES PATENT AND TRADEMARK OFFICE
P.O. BOX 1450
ALEXANDRIA, VA 22313-1450
www.uspto.gov

FOLEY & LARDNER
777 EAST WISCONSIN AVENUE
SUITE 3800
MILWAUKEE WI 53202-5308

In re Application of	:	
Samz et al	:	
Serial No.: 29/170,146	:	**REQUEST FOR EXPEDITED EXAMINATION**
Filed: November 1, 2002	:	
For: Closure for a Container	:	

This is in response to the Request for expedited examination applicant filed December 9, 2003, to expedite the above-identified application under the provisions of 37 CFR 1.155.

Applicant has satisfied the provisions set forth in 37 CFR 1.155, thus the petition is **GRANTED**.

The application will be forwarded to the examiner for action on the merits commensurate with this decision.

Should there be any questions with regard to this letter please contact John Kittle by letter addressed to the Director, Technology Center 3700/2900, or by telephone at (703)308-0873 or by facsimile transmission at (703)308-3139.

John E. Kittle

John E. Kittle
Director
Technology Center 3700/2900

#8

UNITED STATES PATENT AND TRADEMARK OFFICE

COMMISSIONER FOR PATENTS
UNITED STATES PATENT AND TRADEMARK OFFICE
P.O. BOX 1450
ALEXANDRIA, VA 22313-1450
www.uspto.gov

DEC 16 2003

FOLEY & LARDNER
777 EAST WISCONSIN AVENUE
SUITE 3800
MILWAUKEE WI 53202-5308

In re Application of	:	
Samz et al	:	
Serial No.: 29/170,214	:	**REQUEST FOR EXPEDITED**
Filed: November 1, 2002	:	**EXAMINATION**
For: Closure for a Container	:	

This is in response to the Request for expedited examination applicant filed December 9, 2003, to expedite the above-identified application under the provisions of 37 CFR 1.155.

Applicant has satisfied the provisions set forth in 37 CFR 1.155, thus the petition is **GRANTED**.

The application will be forwarded to the examiner for action on the merits commensurate with this decision.

Should there be any questions with regard to this letter please contact John Kittle by letter addressed to the Director, Technology Center 3700/2900, or by telephone at (703)308-0873 or by facsimile transmission at (703)308-3139.

John E. Kittle

John E. Kittle
Director
Technology Center 3700/2900

UNITED STATES PATENT AND TRADEMARK OFFICE

COMMISSIONER FOR PATENTS
UNITED STATES PATENT AND TRADEMARK OFFICE
P.O. BOX 1450
ALEXANDRIA, VA 22313-1450
www.uspto.gov

FOLEY & LARDNER
777 EAST WISCONSIN AVENUE
SUITE 3800
MILWAUKEE WI 53202-5308

In re Application of Samz et al Serial No.: 29/170,214 Filed: November 1, 2002 For: Closure for a Container	: : : : :	**REQUEST FOR EXPEDITED EXAMINATION**

This is in response to the Request for expedited examination applicant filed December 9, 2003, to expedite the above-identified application under the provisions of 37 CFR 1.155.

Applicant has satisfied the provisions set forth in 37 CFR 1.155, thus the petition is **GRANTED**.

The application will be forwarded to the examiner for action on the merits commensurate with this decision.

Should there be any questions with regard to this letter please contact John Kittle by letter addressed to the Director, Technology Center 3700/2900, or by telephone at (703)308-0873 or by facsimile transmission at (703)308-3139.

John E. Kittle

John E. Kittle
Director
Technology Center 3700/2900

UNITED STATES PATENT AND TRADEMARK OFFICE

COMMISSIONER FOR PATENTS
UNITED STATES PATENT AND TRADEMARK OFFICE
P.O. BOX 1450
ALEXANDRIA, VA 22313-1450
www.uspto.gov

MURPHEY & MURPHEY, A.P.C.
PACIFIC CENTER ONE, SUITE 260
701 PALOMAR AIRPORT ROAD
CARLSBAD, CA 92009-1027

5/18/05

In re Application of
Raymond W. Howard
Serial No.: 29/170,255
Filed: October 31, 2002
Attorney Docket No.: LUCKY LINE.1329

: PETITION DECISION

This is a decision on applicant's petition to revive patent application under 37 CFR 1.137(b), filed June 28, 2004, with a copy submitted by facsimile March 7, 2005, to revive an unintentionally abandoned application. The delay in acting upon this petition is regretted; applicant's assistance in submitting a copy of the petition was appreciated.

Applicant's petition is **DISMISSED.**

This application became abandoned for failure to timely respond to the Notice of Allowance mailed May 30, 2003 which set a three month statutory period of time to submit the Issue fee and formal drawings. The Issue fee was received June 27, 2003; however, as no formal drawings were received by September 2, 2003, a Notice of Abandonment was mailed March 4, 2004. The formal drawings were submitted March 24, 2004; this petition followed.

A grantable petition under 37 CFR 1.137(b), as revised December 1, 1997, requires four items: (1) a petition and petition fee; (2) a complete response if not earlier made; (3) a statement that the entire period of delay in prosecution was unintentional; and (4) a terminal disclaimer and disclaimer fee. Applicant's petition lacks a terminal disclaimer and fee (4), a copy of which was sent by facsimile to applicant March 8, 2005; however, no response was received.

Any renewed petition in order to be considered timely must be filed within TWO MONTHS of the date of mailing of this decision.

Should there be any questions with respect to this decision, please contact Sandra Morris; by mail addressed to: Director, Technology Center 1700/2900, P.O. Box 1450, Alexandria, VA 22313-1450; or by telephone at (571) 272-2622.

JMStone
Jacqueline Stone
Director, Technology Center 1700/2900

UNITED STATES PATENT AND TRADEMARK OFFICE

Commissioner for Patents
United States Patent and Trademark Office
P.O. Box 1450
Alexandria, VA 22313-1450
www.uspto.gov

MURPHEY & MURPHEY, A.P.C.
PACIFIC CENTER ONE, SUITE 260
701 PALOMAR AIRPORT ROAD
CARLSBAD, CA 92009-1027

6/27/05

In re Application of
Raymond W. Howard
Serial No.: 29/170,255
Filed: October 31, 2002
Attorney Docket No.: LUCKY LINE.1329

: PETITION DECISION

This is a decision on applicant's petition to revive patent application under 37 CFR 1.137(b), to revive an unintentionally abandoned application.

This application became abandoned for failure to timely respond to the Notice of Allowance mailed May 30, 2003 which set a three month statutory period of time to submit the Issue fee and formal drawings. The Issue fee was received June 27, 2003; however, as no formal drawings were received by September 2, 2003, a Notice of Abandonment was mailed March 4, 2004. The formal drawings were submitted March 24, 2004; a petition was filed June 28, 2004 which was dismissed, due to the lack of a terminal disclaimer.

A grantable petition for a design application under 37 CFR 1.137(b), as revised December 1, 1997, requires four items: (1) a petition and petition fee; (2) a complete response if not earlier made; (3) a statement that the entire period of delay in prosecution was unintentional; and (4) a terminal disclaimer and disclaimer fee. A proper terminal disclaimer was submitted by facsimile April 18, 2004.

Applicant's petition is **GRANTED**.

The terminal disclaimer fee of $65.00 will be charged to applicant's Deposit Account 50-1990, as directed.

The application will be forwarded to Publication Division for printing as a patent in due course.

Should there be any questions with respect to this decision, please contact Sandra Morris; by mail addressed to: Director, Technology Center 1700/2900, P.O. Box 1450, Alexandria, VA 22313-1450; or by telephone at (571) 272-2622.

Jacqueline Stone
Director, Technology Center 1700/2900

Approved

Jacqueline M. Stone

Jacqueline M. Stone, Director
Technology Center 1700

UNITED STATES PATENT AND TRADEMARK OFFICE

UNITED STATES DEPARTMENT OF COMMERCE
United States Patent and Trademark Office
Address: COMMISSIONER FOR PATENTS
P.O. Box 1450
Alexandria, Virginia 22313-1450
www.uspto.gov

APPLICATION NO.	FILING DATE	FIRST NAMED INVENTOR	ATTORNEY DOCKET NO.	CONFIRMATION NO.
29/170,334	11/05/2002	Peter Pfeiffer	038739.16549US	5537

23911 7590 08/25/2003

CROWELL & MORING LLP
INTELLECTUAL PROPERTY GROUP
P.O. BOX 14300
WASHINGTON, DC 20044-4300

EXAMINER
JACKSON, MARCUS A

ART UNIT	PAPER NUMBER
2911	

DATE MAILED: 08/25/2003

Please find below and/or attached an Office communication concerning this application or proceeding.

The request for deferral/suspension of action under 37 CFR 1.103 has been approved.

UNITED STATES PATENT AND TRADEMARK OFFICE

COMMISSIONER FOR PATENTS
UNITED STATES PATENT AND TRADEMARK OFFICE
WASHINGTON, D.C. 20231
www.uspto.gov

DONALD D. EVENSON
CROWELL & MORING, LLP
P.O. BOX 14300
WASHINGTON, DC 20044-4300

In re Application of	:
Peter Pfeiffer	:
Application No. 29/170,334	: PETITION DECISION
Filed: November 5, 2002	:
Attorney Docket No. 038739.16549US	:

Pursuant to applicant's petition filed on February 12, 2003, action by the Office is suspended on this application under 37 CFR 1.103(a) for a period of 6 months. At the end of this period, applicant is required to notify the examiner and request continuance of prosecution or a further suspension. See MPEP § 709.

Should there be any questions with regard to this letter please contact James Gandy, by letter addressed to Technology Center 2900, P.O. Box 1450 Alexandria, VA 22313-1450, or by telephone at (703) 305-3264.

James Gandy
Design Patent Practice Specialist
Technology Center 2900

UNITED STATES PATENT AND TRADEMARK OFFICE

Commissioner for Patents
United States Patent and Trademark Office
P.O. Box 1450
Alexandria, VA 22313-1450
www.uspto.gov

Paper No.

PEARNE & GORDON LLP
1801 EAST 9TH STREET
SUITE 1200
CLEVELAND, OH 44114-3108

COPY MAILED

MAR 2 0 2006

OFFICE OF PETITIONS

In re Application of	:	
Inese Ljunggren	:	DECISION DISMISSING
Application No. 29/170,352	:	PETITION
Filed: November 4, 2002	:	
Atty Docket No. 35096	:	

This is a decision on the "Petition for Revival of An Application for Patent Abandoned Unavoidably Under 37 CFR 1.137(a)" filed December 23, 2005.

The petition is **DISMISSED**.

Any request for reconsideration of this decision must be submitted within **TWO (2) MONTHS** from the mail date of this decision. The reconsideration request should include a cover letter entitled "Renewed Petition under 37 CFR §1.137(a)" or "Renewed Petition under 37 CFR §1.137(b)," as appropriate. Extensions of time under 37 CFR §1.136(a) are permitted.

BACKGROUND

The above-identified design application, including the design application filing fee and meeting the requirements for a filing date under § 1.53(b), was filed on November 4, 2002. Because the application did not include an executed oath or declaration, on December 6, 2002, the Office mailed a Notice to File Missing Parts of Nonprovisional Application requiring the missing item and the late surcharge pursuant to 37 CFR 1.16(e). This Notice set a two-month period for reply, with extensions of time obtainable under § 1.136(a). An extension of time for response

within the fifth month was filed, extending the period for response to July 6, 2003. However, no response accompanied the request for extension nor was a response otherwise filed within the extended period for response. (A continuation application, which is not a "response", was filed on June 24, 2003). Accordingly, a further Notice of Incomplete Reply was mailed on September 30, 2003. Nonetheless, the period to satisfy the requirements of the Notice to File Missing Parts of Application continued to run from the date of the mailing of the original Notice, December 6, 2002.

The above-identified application became abandoned for failure to file a timely and proper reply to the Notice to File Missing Parts of Nonprovisional Application mailed December 2, 2002. Accordingly, the above-identified application became abandoned effective July 7, 2003. A Notice of Abandonment was mailed on September 1, 2004.

The instant petition (and petition fee, with response to the Notice) was filed more than a year later. Petitioner maintains that the entire delay in filing the required reply from the due date of the reply until the filing of a grantable petition was unavoidable. Petitioner indicates that the delay in filing an executed oath or declaration was initially due to the inventor's refusal to cooperate within the maximum extendable period for response to the Notice. Petitioner further indicates that before the period for response expired a first continuation application was filed and this application was allowed to become abandoned, as the continuation application would be entitled to the benefit of the filing date of the instant application. Petitioner indicates that the missing declaration was then to be sought in the continuation application. The period for response to the Notice to File Missing Parts of Application in the first continuation being near expiration, a second continuation application was filed on March 12, 2004. In response to the Notice to File Missing Parts in the second continuation, an executed declaration was timely filed.

However, petitioner did not realize that due to an error on the part of an employee in preparing the continuation application, an incorrect set of drawings was filed in both the first and second continuation applications. Petitioner states that applicant and applicant's representative first became aware of this error by virtue of the Office action mailed April 1, 2005. By amendment filed July 1, 2005, applicant unsuccessful tried to

cure the consequent defective priority claim. The instant petition was filed on December 23, 2005.

Petitioner contends that the application was unavoidably abandoned due to the employee error in photocopying the wrong set of drawings for the first and second continuation application.

RELEVANT STATUTES, REGULATIONS AND RULES OF PRACTICE

35 U.S.C. §133 provides that the Commissioner may revive an application if the delay in replying to the outstanding Office action is shown to the satisfaction of the Commissioner to have been unavoidable. A grantable petition under §1.137(a) must be accompanied by: (1) the reply required to the outstanding Office action or notice, unless previously filed; (2) the petition fee set forth in 37 CFR §1.17(l); (3) a showing to the satisfaction of the Director that the entire delay in filing the required reply from the due date for the reply until the filing of a grantable petition pursuant to this paragraph was unavoidable; and (4) any terminal disclaimer (and fee as set forth in §1.20(d)) required pursuant to §1.137(d).

The instant petition includes the required reply in the form of an executed declaration and payment of the late surcharge, the petition fee, and the required terminal disclaimer. However, the petition does not satisfy requirement (3).

Decisions on reviving abandoned applications on the basis of "unavoidable" delay have adopted the reasonably prudent person standard in determining if the delay was unavoidable:

> The word 'unavoidable' ... is applicable to ordinary human affairs, and requires no more or greater care or diligence than is generally used and observed by prudent and careful men in relation to their most important business. It permits them in the exercise of this care to rely upon the ordinary and trustworthy agencies of mail and telegraph, worthy and reliable employees, and such other means and instrumentalities as are usually employed in such important business. If unexpectedly, or through the unforeseen fault or imperfection of these agencies and instrumentalities, there occurs a failure, it may properly be said to be unavoidable, all other conditions of promptness in its rectification being present.

In re Mattullath, 38 App. D.C. 497, 514-15 (1912)(quoting Ex parte Pratt, 1887 Dec. Comm'r Pat. 31, 32-33 (1887)); see also Winkler v. Ladd, 221 F. Supp. 550, 552, 138 U.S.P.Q. 666, 167-68 (D.D.C. 1963), aff'd, 143 U.S.P.Q. 172 (D.C. Cir. 1963); Ex parte Henrich, 1913 Dec. Comm'r Pat. 139, 141 (1913). In addition, decisions on revival are made on a "case-by-case basis, taking all the facts and circumstances into account." Smith, 671 F.2d at 538, 213 U.S.P.Q. at 982. Nonetheless, a petition cannot be granted where a petitioner has failed to meet his or her burden of establishing that the delay was "unavoidable." Haines, 673 F. Supp. at 316-17, 5 U.S.P.Q.2d at 1131-32.

The patent law requires an applicant to prosecute a patent application with reasonable diligence. See Planing Machine Co. v. Keith, 101 U.S. 479 (1879), quoted in In re Takeo, 17 U.S.P.Q. 2d (BNA) 1155 (Comm'r Pat. & Trademarks Feb. 27, 1990). The diligence required pertains to the act(s) required of applicant to respond to any outstanding Office action or requirement so that the PTO can take appropriate action in completing the examination of the application. In re Takeo, 17 U.S.P.Q.2d (BNA) 1155 (Comm'r Pat. & Trademarks Feb. 27, 1990). Thus, the failure to act does not reflect "unavoidable" delay. An application is "unavoidably" abandoned only where petitioner, or counsel for petitioner, takes all action necessary for a proper response to the outstanding Office action, but through the Intervention of unforeseen circumstances, such as failure of mail, telegraph, facsimile, or the negligence of otherwise reliable employees, the response is not timely received in the Office. Ex parte Pratt, 1887 Dec. Comm'r Pat. 31 (Comm'r Pat. 1887).

Moreover, delay resulting from the lack of knowledge or improper application of the patent statute, rules of practice or the MPEP, however, does not constitute unavoidable delay. See Haines, 673 F. Supp. At 317, 5 U.S.P.Q.2d at 1132; Vincent v. Mossinghoff, 230 U.S.P.Q. 621, 624 (D.D.C. 1985); Smith v. Diamond, 209 U.S.P.Q. 1091 (D.D.C. 1981); Potter v. Dann, 201 U.S.P.Q. 574 (D.D.C. 1978); Ex parte Murray, 1891 Dec. Comm'r Pat. 130, 131 (1891). (Cf. In re Decision dated February 18, 1969, 162 U.S.P.Q. 383 (Comm'r Pat. 1969; interpretation of rule 7 was not unreasonable; hence, resultant delay in prosecution may be considered unavoidable). A delay caused by an applicant's lack of knowledge or improper application of the

patent statute, rules of practice or the MPEP is not rendered "unavoidable" due to: (A) the applicant's reliance upon oral advice from USPTO employees; or (B) the USPTO's failure to advise the applicant of any deficiency in sufficient time to permit the applicant to take corrective action. See In re Sivertz, 227 U.S.P.Q. 255, 256 (Comm'r Pat. 1985).

Furthermore, 35 U.S.C. 133 requires a showing that the "delay" was "unavoidable," which requires not only a showing that the delay which resulted in the abandonment of the application was unavoidable, but also a showing of unavoidable delay until the filing of a petition to revive. See In re Application of Takeo. The burden of continuing the process of presenting a grantable petition in a timely manner likewise remains with the applicant until the applicant is informed that the petition is granted. Id. at 1158. Thus, an applicant seeking to revive an "unavoidably" abandoned application must cause a petition under 37 CFR 1.137(a) to be filed without delay (i.e., promptly upon becoming notified, or otherwise becoming aware, of the abandonment of the application).

Where the applicant deliberately permits an application to become abandoned (e.g., due to a conclusion that the claims are unpatentable, that a rejection in an Office action cannot be overcome, or that the invention lacks sufficient commercial value to justify continued prosecution), the abandonment of such application is considered to be a deliberately chosen course of action, and the resulting delay cannot be considered as "unintentional" within the meaning of 37 CFR 1.137(b). See In re Application of G, 11 USPQ2d 1378, 1380 (Comm'r Pat. 1989). An intentional course of action is not rendered unintentional when, upon reconsideration, the applicant changes his or her mind as to the course of action that should have been taken. See In re Maldague, 10 USPQ2d 1477, 1478 (Comm'r Pat. 1988).

ANALYSIS

Preliminarily, it is considered whether petitioner's allowing of the application to go abandoned for the purpose of filing a continuing application warrants a conclusion that revival on the basis of unavoidable delay is precluded. Under the circumstances of the abandonment of this case, it is concluded that petitioner did not make a deliberate decision to abandon the subject matter of the application. Rather, applicant attempted to continue prosecution of the subject matter by

filing continuing applications prior to the expiration of the extended period for response to the Notice to File Missing Parts of Application.

The question now turns to whether the delay should be considered unavoidable. The above-identified application became abandoned for failure to file a timely and proper reply to the Notice to File Missing Parts of Nonprovisional Application mailed December 2, 2002. The cause of the delay was not the clerical personnel placing the wrong drawings in the continuing application. The cause of the delay was applicant filing a continuing application instead of taking action in response to the Notice. Applicant could have filed a petition under § 1.47 in satisfaction of the Notice. As stated above, applicant's lack of knowledge of the application of rule 47 is not unavoidable.

Accordingly, the petition is **DISMISSED**.

Alternative Venue

While the showing of record is not sufficient to establish to the satisfaction of the Director that the delay was unavoidable, petitioner is not precluded from obtaining relief by filing a request for reconsideration pursuant to 37 CFR §1.137(b) on the basis of unintentional delay. A grantable petition under §1.137(b) must be accompanied by: (1) the reply required to the outstanding Office action or notice, unless previously filed; (2) the petition fee set forth in 37 CFR §1.17(m); (3) a statement that the entire delay in filing the required reply from the due date for the reply until the filing of a grantable petition pursuant to this paragraph was unintentional; and (4) any terminal disclaimer (and fee as set forth in §1.20(d)) required pursuant to §1.137(d).

Further correspondence with respect to this decision should be addressed as follows:

By mail: Mail Stop Petition
Commissioner for Patents
P.O. Box 1450
Alexandria, VA 22313-1450

By fax: (571) 273-8300
ATTN: Office of Petitions

By hand: Customer Service Window
Randolph Building
401 Dulany Street
Alexandria, VA 22314

Telephone inquiries related to this decision should be directed to the undersigned at (571) 272-3219.

Nancy Johnson
Senior Petitions Attorney
Office of Petitions

UNITED STATES PATENT AND TRADEMARK OFFICE

Commissioner for Patents
United States Patent and Trademark Office
P.O. Box 1450
Alexandria, VA 22313-1450
www.uspto.gov

Paper No.

PEARNE & GORDON LLP
1801 EAST 9TH STREET
SUITE 1200
CLEVELAND, OH 44114-3108

COPY MAILED
SEP 1 1 2006
OFFICE OF PETITIONS

In re Application of	:	
Inese Ljunggren	:	DECISION ON
Application No. 29/170,352	:	PETITION
Filed: November 4, 2002	:	
Atty Docket No. 35096	:	

This is a decision on the RENEWED PETITION UNDER 37 CFR §1.137(B) filed August 23, 2006.

The petition is **GRANTED**.

The above-identified application became abandoned effective July 7, 2003 for failure to file a timely and proper reply to the Notice to File Missing Parts of Nonprovisional Application mailed December 2, 2002. By decision mailed March 20, 2006, the initial "Petition for Revival of An Application for Patent Abandoned Unavoidably Under 37 CFR 1.137(a)" filed December 23, 2005 was dismissed. Petitioner did not show to the satisfaction of the Director that the delay in filing the response was unavoidable within the meaning of §1.137(a).

The instant renewed petition included further explanation of the delay, the required statement of unintentional delay, payment of the petition fee and a terminal disclaimer. The required reply in the form of a declaration and late surcharge was submitted on initial petition filed December 23, 2005.

The instant application has been abandoned for an extended period of time. The Office is relying on petitioner's duty of good faith and candor in accepting the assertion that the entire

delay in filing the required reply was unintentional. See 37 CFR 10.18.

The application is being forwarded to the Office of Initial Patent Examination (OIPE) for completion of pre-examination processing.

Telephone inquiries related to this decision should be directed to the undersigned at (571) 272-3219.

Nancy Johnson
Senior Petitions Attorney
Office of Petitions

UNITED STATES PATENT AND TRADEMARK OFFICE

COMMISSIONER FOR PATENTS
UNITED STATES PATENT AND TRADEMARK OFFICE
P.O. BOX 1450
ALEXANDRIA, VA 22313-1450
www.uspto.gov

AUG 11 2004

#5

HIRONOBU KONDO
OHIZUMIGAKUEN-CHO 6-1-12
NERIMA-KU, TOKYO, 179-0076
JAPAN

In re Application of	:
Hironobu Kondo	:
Application No. 29/170,569	: PETITION DECISION
Filed: November 7, 2002	:

This is a decision in response to the petition to revive under 37 CFR 1.137(a) filed November 30, 2003, which is being treated as a petition under 37 CFR 1.181 requesting withdraw of the holding of abandonment.

The petition is **GRANTED**.

This application became abandoned for failure to respond to the Office action, mailed April 23, 2003, which set a three-month shortened statutory period for reply. Upon failure to submit a response to the Office action within the full six month statutory period a Notice of Abandonment was mailed on November 3, 2003. This petition followed.

Petitioner states that a reply was mailed on July 17, 2003 responding to the Office action mailed April 23, 2003, but was treated as a new application and given the serial number 29/186,722. A review of application serial number 29/186,722 reveals that an amendment directed to serial number 29/170,569 was received on July 17, 2003 and mistreated as new application papers.

Accordingly, the application is not abandoned in fact because a response was received within the shortened statutory time period set. The Notice of Abandonment is hereby vacated and the holding of abandonment withdrawn.

The application will be forwarded to the examiner for further consideration in view of the timely response to the Office action mailed April 23, 2003.

Should there be any questions with regard to this letter please contact James Gandy, by letter addressed to the Director, Technology Center 3700/2900, P.O. Box 1450 Alexandria, VA 22313-1450, or by telephone at (571) 272-2579.

James Gandy for

John Kittle
Director, Technology Center 3700/2900

UNITED STATES PATENT AND TRADEMARK OFFICE

COMMISSIONER FOR PATENTS
UNITED STATES PATENT AND TRADEMARK OFFICE
P.O. BOX 1450
ALEXANDRIA, VA 22313-1450
www.uspto.gov

MAR 29 2005

BAKER & BOTTS
30 ROCKEFELLER PLAZA
NEW YORK, NY 10112

In re Application of
Timm J. Fenton
Serial No.: 29/170,609
Filed: November 8, 2002
Attorney Docket No.: A35251-072841.0165

: PETITION DECISION

This is a decision on applicant's Petition under 37 CFR 1.137(b) filed November 22, 2004, to revive an unintentionally abandoned application.

This application became abandoned for failure to fully respond to the Notice of Allowance mailed April 8, 2004, which set a three-month statutory period to pay the Issue fee and submit formal drawings. The Issue fee was received June 25, 2004; however, as no formal drawings were received by July 8, 2004, a Notice of Abandonment was mailed August 13, 2004. This petition followed.

A grantable petition under 37 CFR 1.137(b), as revised December 1, 1997, requires four items: (1) a petition and petition fee; (2) a complete response if not earlier made; (3) a statement that the entire period of delay in prosecution was unintentional; and (4) a terminal disclaimer and disclaimer fee. A proper terminal disclaimer was submitted by facsimile January 6, 2005.

Applicant's petition is **GRANTED.**

The $55.00 Terminal Disclaimer fee will be charged to applicant's Deposit Account 02-4377, as directed.

The application will be forwarded to Publications Branch to be issued into a Patent in due course.

Should there be any questions with respect to this decision, please contact Sandra Morris; by mail addressed to: Director, Technology Center 1700/2900, P.O. Box 1450, Alexandria, VA 22313-1450; or by telephone at (571) 272-2622.

Jacqueline Stone
Director, Technology Center 1700/2900

UNITED STATES PATENT AND TRADEMARK OFFICE

UNITED STATES DEPARTMENT OF COMMERCE
United States Patent and Trademark Office
Address: COMMISSIONER FOR PATENTS
P.O. Box 1450
Alexandria, Virginia 22313-1450
www.uspto.gov

APPLICATION NO.	FILING DATE	FIRST NAMED INVENTOR	ATTORNEY DOCKET NO.	CONFIRMATION NO.
29/170,770	11/13/2002	Peter Pfeiffer	038739.16551US	5922

23911 7590 08/25/2003

CROWELL & MORING LLP
INTELLECTUAL PROPERTY GROUP
P.O. BOX 14300
WASHINGTON, DC 20044-4300

EXAMINER
JACKSON, MARCUS A

ART UNIT	PAPER NUMBER
2911	9

DATE MAILED: 08/25/2003

Please find below and/or attached an Office communication concerning this application or proceeding.

The request for deferral/suspension of action under 37 CFR 1.103 has been approved.

UNITED STATES PATENT AND TRADEMARK OFFICE

COMMISSIONER FOR PATENTS
UNITED STATES PATENT AND TRADEMARK OFFICE
WASHINGTON, D.C. 20231
www.uspto.gov

DONALD D. EVENSON
CROWELL & MORING, LLP
P.O. BOX 14300
WASHINGTON, DC 20044-4300

In re Application of	:
Peter Pfeiffer et al.	:
Application No. 29/170,770	: PETITION DECISION
Filed: November 13, 2002	:
Attorney Docket No. 038739.16551US	:

Pursuant to applicant's petition filed on February 13, 2003, action by the Office is suspended on this application under 37 CFR 1.103(a) for a period of 6 months. At the end of this period, applicant is required to notify the examiner and request continuance of prosecution or a further suspension. See MPEP § 709.

Should there be any questions with regard to this letter please contact James Gandy, by letter addressed to Technology Center 2900, P.O. Box 1450 Alexandria, VA 22313-1450, or by telephone at (703) 305-3264.

James Gandy
Design Patent Practice Specialist
Technology Center 2900

UNITED STATES PATENT AND TRADEMARK OFFICE

UNITED STATES DEPARTMENT OF COMMERCE
United States Patent and Trademark Office
Address: COMMISSIONER FOR PATENTS
P.O. Box 1450
Alexandria, Virginia 22313-1450
www.uspto.gov

APPLICATION NO.	FILING DATE	FIRST NAMED INVENTOR	ATTORNEY DOCKET NO.	CONFIRMATION NO.
29/170,773	11/13/2002	Peter Pfeiffer	038739.16552US	5927

23911 7590 08/25/2003
CROWELL & MORING LLP
INTELLECTUAL PROPERTY GROUP
P.O. BOX 14300
WASHINGTON, DC 20044-4300

EXAMINER
JACKSON, MARCUS A

ART UNIT	PAPER NUMBER
2911	11

DATE MAILED: 08/25/2003

Please find below and/or attached an Office communication concerning this application or proceeding.

The request for deferral/suspension of action under 37 CFR 1.103 has been approved.

UNITED STATES PATENT AND TRADEMARK OFFICE

COMMISSIONER FOR PATENTS
UNITED STATES PATENT AND TRADEMARK OFFICE
WASHINGTON, D.C. 20231
www.uspto.gov

DONALD D. EVENSON
CROWELL & MORING, LLP
P.O. BOX 14300
WASHINGTON, DC 20044-4300

In re Application of	:
Peter Pfeiffer et al.	:
Application No. 29/170,773	: PETITION DECISION
Filed: November 13, 2002	:
Attorney Docket No. 038739.16552US	:

Pursuant to applicant's petition filed on February 13, 2003, action by the Office is suspended on this application under 37 CFR 1.103(a) for a period of 6 months. At the end of this period, applicant is required to notify the examiner and request continuance of prosecution or a further suspension. See MPEP § 709.

Should there be any questions with regard to this letter please contact James Gandy, by letter addressed to Technology Center 2900, P.O. Box 1450 Alexandria, VA 22313-1450, or by telephone at (703) 305-3264.

James Gandy
Design Patent Practice Specialist
Technology Center 2900

UNITED STATES PATENT AND TRADEMARK OFFICE

Commissioner for Patents
United States Patent and Trademark Office
P.O. Box 1450
Alexandria, VA 22313-1450
www.uspto.gov

DEC 18 2003

#6

PENNIE & EDMONDS LLP
COUNSELLORS AT LAW
1155 AVENUE OF THE AMERICAS
NEW YORK, NY 10036-2711

In re Application of:	:
Nicolas Pommier et al.	:
Serial No.: 29/170,934	: PETITION DECISION
Filed: November 13, 2002	:
Attorney Docket No.: 11266-0002	:

This is a decision on applicants' Petition under 37 CFR 1.137(b) to withdraw abandonment filed October 7, 2003.

The petition is **GRANTED**.

This application became abandoned for failure to respond to the Notice to File Missing Parts of Nonprovisional Application, mailed December 17, 2002, which set a two-month shortened statutory period to respond. Upon failure to respond by February 18, 2002, a Notice of Abandonment was mailed September 8, 2003. This petition followed.

A grantable petition under 37 CFR 1.137(b), as revised December 1, 1997, requires four items: (1) a petition and petition fee; (2) a complete response if not earlier made; (3) a statement that the entire period of delay in prosecution was unintentional; and (4) a terminal disclaimer and disclaimer fee. A proper Terminal Disclaimer was submitted by facsimile on December 3, 2003.

The terminal disclaimer fee of $110.00 will be charged to applicant's Deposit Account 16-1150, as directed.

The application will be forwarded to an Examiner for initial examination in due course.

Should there be any questions with regard to this letter please contact Sandra Morris; by letter addressed to the Director, Technology Center 3700/2900, PO Box 1450, Alexandria VA 22313-1450; or by telephone at (703) 305-3102 or by facsimile transmission at (703) 305-5679.

John Kittle
Director, Technology Center 3700/2900

UNITED STATES PATENT AND TRADEMARK OFFICE

Commissioner for Patents
United States Patent and Trademark Office
P.O. Box 1450
Alexandria, VA 22313-1450
www.uspto.gov

JONES DAY
222 EAST 41ST ST
NEW YORK NY 10017

COPY MAILED
FEB 14 2006
OFFICE OF PETITIONS

In re Application of	:	
Pommier et al.	:	
Application No. 29/170,934	:	ON PETITION
Filed: November 13, 2002	:	
Attorney Docket No. 11289-003-999	:	

This is a decision on the petition under 37 CFR 1.181, filed September 8, 2005, requesting the withdrawal of the holding of abandonment in the above-identified application and has been so treated.

The petition to withdraw the holding of abandonment is **GRANTED.**

The above-identified application was held abandoned for failure to submit formal drawings and the issue fee in a timely manner in reply to the Notice of Allowability and Notice of Allowance mailed January 10, 2005. A reply was due on or before April 11, 2005. A Notice of Abandonment was mailed on August 3, 2005.

Petitioner states that the Notice of Allowability and Notice of Allowance were never received. The showing required to establish non-receipt of Office communications must include:

1. A statement from the practitioner stating that the Office communications were not received by the practitioner and attesting to the fact that a search of the file jacket and docket records indicates that the Office communications were not received.

2. A copy of the docket record where the non-received Office communications would have been entered had they been received and docketed must be attached to and referenced in practitioner's statement.[1]

In the absence of any irregularity there is a strong presumption that the communications were properly mailed to the applicant at the correspondence address of record. This presumption may be overcome by a showing that the aforementioned communications ~~was~~ were not in fact received.

Petitioner has complied with the above requirements. The holding of abandonment is hereby withdrawn and the application restored to pending status.

---

[1] See MPEP 711.03(c) and notice entitled "Withdrawing the Holding of Abandonment When Office Actions Are Not Received," 1156 O.G. 53 (November 16, 1993).

A petition to withdraw the holding of abandonment under the provisions of 37 CFR 1.181 does not require a fee and none has been charged.

Petitioner has submitted the Issue Fee Transmittal (with requisite fees) and Corrected Drawings with the instant petition. Accordingly, this matter is being referred to the Publishing Division.

Telephone inquiries concerning this decision should be directed to Petitions Examiner Liana Chase at (571) 272-3206.

Frances Hicks

Frances Hicks
Petitions Examiner
Office of Petitions

UNITED STATES PATENT AND TRADEMARK OFFICE

COMMISSIONER FOR PATENTS
UNITED STATES PATENT AND TRADEMARK OFFICE
P.O. BOX 1450
ALEXANDRIA, VA 22313-1450
www.uspto.gov

WILLIAM W. HAEFLIGER
SUITE 512
201 SO. LAKE. AVE.
PASADENA, CA 91101

In re Application of
John P. Brice
Serial No.: 29/171,116
Filed: November 15, 2002
Attorney Docket No.: 12,461

: PETITION DECISION

This is in response to applicant's Petition to Withhold Abandonment under 37 CFR 1.181, received December 28, 2004, based on having responded to the Office action.

A review of the file history shows that a Notice of Allowance was mailed July 6, 2004, setting a three month statutory period to submit formal drawings and the Issue fee. The Issue fee was submitted August 5, 2004; however, as no formal drawings were received by October 6, 2004, the application was abandoned.

Applicant has stated that formal drawings were submitted on May 25, 2004, as evidenced by the post card receipt. However, applicant has submitted no proof that formal drawings in response to the Notice of Allowance were ever submitted. Applicant was required by the Examiner to make corrections to the May 25, 2004 drawings, as evidenced by the annotated drawings and Examiner's Amendment. Therefore, as applicant has not submitted evidence that the required drawings were submitted, the application was properly abandoned.

Applicant may wish to instead file a Petition under 37 CFR 1.137(b) to revive the application. A petition under 37 CFR 1.137(b) for revival of an application abandoned unintentionally must be filed promptly after applicant becomes aware of the abandonment of the application. The petition must be accompanied by (1) a verified statement that the application was abandoned unintentionally for the entire period of abandonment, (2) by the petition fee, (3) by a full and complete response to the last Office action, including formal drawings, and (4) by a terminal disclaimer and fee therefor of $55.00. If the application has been abandoned for more than one year an explanation of the delay in filing the petition is also required.

Any renewed petition in order to be considered timely must be filed within TWO MONTHS of the date of mailing of this decision. Applicant's petition is **DISMISSED.**

Should there be any questions with respect to this decision, please contact Sandra Morris; by mail addressed to: Director, Technology Center 1700/2900, P.O. Box 1450, Alexandria, VA 22313-1450; or by telephone at (571) 272-2622.

Jacqueline Stone
Director, Technology Center 1700/2900

UNITED STATES PATENT AND TRADEMARK OFFICE

Commissioner for Patents
United States Patent and Trademark Office
P.O. Box 1450
Alexandria, VA 22313-1450
www.uspto.gov

6/21/05

WILLIAM W HAEFLINGER
SUITE 512
201 SO. LAKE AVE.
PASADENA, CA 91101

In re Application of
John P. Brice
Serial No.: 29/171,116
Filed: November 15, 2002
Attorney Docket No.: 12,461

: PETITION DECISION

This is a decision on the renewed Petition to Revive under 37 CFR 1.137(b), received May 16, 2005, to revive an unintentionally abandoned application.

The petition is **DISMISSED**.

A review of the file shows that a Notice of Allowance was mailed July 6, 2004, setting a three month statutory period to submit formal drawings and the Issue fee. The fee was submitted August 5, 2004; however, as no formal drawings were received by October 6, 2004, the application was abandoned. Applicant filed a Petition to revive under 37 CFR 1.181 on December 28, 2004 which was dismissed, as applicant did not submit evidence that the formal drawings were timely submitted.

A grantable petition under 37 CFR 1.137(b), as revised December 1, 1997, requires four items: (1) a petition and petition fee; (2) a complete response if not earlier made; (3) a statement that the entire period of delay in prosecution was unintentional; and (4) a terminal disclaimer and disclaimer fee. Applicant's petition lacks item (2), as the required formal drawings, for which the application went abandoned, have still not been submitted. Applicant seems to be under the misunderstanding, even after the Notice of Abandonment was issued and the petition was dismissed, that formal drawings are not required. Therefore, copies of the Notice of Allowance, along with the Examiner's Amendment and annotated drawings, are included with this decision. Hopefully this will aid applicant's understanding of what **must** be submitted before the case can proceed to issue.

Any renewed petition in order to be considered timely must be filed within TWO MONTHS of the date of mailing of this decision.

Should there be any questions with respect to this decision, please contact Sandra Morris; by mail addressed to: Director, Technology Center 1700/2900, P.O. Box 1450, Alexandria, VA 22313-1450; or by telephone at (571) 272-2622.

Jacqueline M. Stone

Jacqueline Stone
Director, Technology Center 1700/2900

UNITED STATES PATENT AND TRADEMARK OFFICE

Commissioner for Patents
United States Patent and Trademark Office
P.O. Box 1450
Alexandria, VA 22313-1450
www.uspto.gov

WILLIAM W. HAEFLIGER
SUITE 512
201 SO. LAKE AVE.
PASADENA, CA 91101

COPY MAILED

FEB 17 2006

OFFICE OF PETITIONS

In re Application of	:	
Brice, et al.	:	
Application No. 29/171,116	:	ON PETITION
Filed: November 15, 2002	:	
Attorney Docket No. 12,461	:	

This is a decision on the renewed petition under 37 CFR 1.137(b), filed August 11, 2005, to revive the above-identified application. The petition was recently forwarded to this office for consideration.

The petition is **GRANTED**.

This application became abandoned for failure to timely file corrected formal drawings on or before October 6, 2004 as required by the Notice of Allowability mailed July 6, 2004. Accordingly, this application became abandoned on October 7, 2004. A Notice of Abandonment was mailed on December 14, 2004.

This application is being forwarded to Technology Center 2900 for review of the drawings filed August 11, 2005.

Telephone inquiries concerning this matter may be directed to the undersigned at (571) 272-3228.

Edward J. Tannouse
Petitions Attorney
Office of Petitions
Office of the Deputy Commissioner
for Patent Examination Policy

UNITED STATES PATENT AND TRADEMARK OFFICE

Commissioner for Patents
United States Patent and Trademark Office
P.O. Box 1450
Alexandria, VA 22313-1450
www.uspto.gov

Date : February 25, 2005

Patent No. : D494,196
Inventor(s) : Jeong
Issued : August 10, 2004
For : PAD FOR GRINDING STONE

#6
P

Re: Request for Certificate of Correction

Consideration has been given your request for the issuance of a certificate of correction for the above-identified patent under the provisions of Rule 1.322.

Respecting the alleged error(s) in item (56), References Cited, after review of the application, it is revealed that the section is printed in accordance with the PTO record. It is also revealed that there is no IDS on record for 01/15/2003, nor was there a copy of a postcard receipt sent with your request for a Certificate of Correction, which verifies your claim of IDS submittal to the PTO. Therefore, being no fault of the Patent and Trademark Office, no correction(s) is/are in order here under United States Codes (U.S.C.) 254 or 255 and the Code of Federal Regulation (C.F.R.) 1.322 or 1.323).

In view of the foregoing, your request in this matter is hereby denied. For further consideration, see the note below.

*Note: If you obtain data that clearly shows the attorney/applicant is not in error, **simply include supporting documentation and associated post card receipts, along with your certificate of correction or reconsideration via postal mail, not by fax**. If you do not have supporting documentation that clearly shows the attorney/applicant is not in error and verifies that the PTO is in error regarding the matter in your request - then, the appropriate fee of $100.00 with your Reconsideration Certificate of Correction will be necessary. Depending upon the matter of your request, in addition, a petition with it's appropriate fee of $130.00 may be necessary, or the request may be denied; please see the MPEP for further instruction and understanding. This is a general hint, which may decrease the processing time of your request.*

Stacy Powell, Sr.
For Cecelia B. Newman, Supervisor
Decisions & Certificates of
Correction Branch
(703) 308 - 9390

The Webb Law Firm
700 Koppers Building
436 Seventh Avenue
Pittsburgh, PA 15219-1818

CBN/spsr

SPE RESPONSE FOR CERTIFICATE OF CORRECTION

Paper No.: _____

DATE : 6/4/09

TO SPE OF : ART UNIT 2913 Antoine Davis

SUBJECT : Request for Certificate of Correction for Appl. No.: 29/171171 Patent No.: D494196

Please respond to this request for a certificate of correction within 7 days.

FOR IFW FILES:

Please review the requested changes/corrections as shown in the **COCIN** document(s) in the IFW application image. No new matter should be introduced, nor should the scope or meaning of the claims be changed.

Please complete the response (see below) and forward the completed response to scanning using document code **COCX**.

FOR PAPER FILES:

Please review the requested changes/corrections as shown in the attached certificate of correction. Please complete this form (see below) and forward it with the file to:

Certificates of Correction Branch (CofC)
South Tower - 9A22
Palm Location 7580

Certificates of Correction Branch
703-308-9390 ext. _____

Thank You For Your Assistance

The request for issuing the above-identified correction(s) is hereby:
Note your decision on the appropriate box.

- [x] **Approved** — All changes apply.
- [ ] **Approved in Part** — Specify below which changes **do not** apply.
- [ ] **Denied** — State the reasons for denial below.

Comments: _____

CARON D. VEYNAR
SUPERVISORY PATENT EXAMINER

SPE

2913
Art Unit

UNITED STATES PATENT AND TRADEMARK OFFICE

Commissioner for Patents
United States Patent and Trademark Office
P.O. Box 1450
Alexandria, VA 22313-1450
www.uspto.gov

MAINE & ASMUS
100 MAIN STREET
P O BOX 3445
NASHUA NH 03061-3445

COPY MAILED
SEP 0 6 2006
OFFICE OF PETITIONS

In re Patent No. D519924	:	
Issue Date: May 2, 2006	:	
Application No. 29/171,277	:	ON PETITION
Filed: November 20, 2002	:	
Attorney Docket Number: 81762/330	:	

This is in response to the paper filed May 23, 2006 requesting that status as a Small Entity be removed and for acceptance of a fee deficiency submission. The paper is being treated as a petition under 37 CFR 1.28

On September 1, 1998, the Court of Appeals for the Federal Circuit held that 37 CFR 1.28(c) is the sole provision governing the time for correction of the erroneous payment of the issue fee as a small entity. See DH Technology v. Synergystex International, Inc.. 154 F.33d 1333, 47 USPQ2d 1865 (Fed. Cir. Sept. 1, 1998).

The Office no longer investigates or rejects original or reissue applications under 37 CFR 1.56. 1098 Off. Gaz. Pat. Office 502 (January 3, 1989). Therefore nothing in this Notice is intended to imply that an investigation was done.

Your fee deficiency submission under 37 CFR 1.28 is hereby accepted and the petition is **GRANTED**.

Inquiries related to this communication should be directed to the Office of Petitions Staff at (571) 272-3282.

Patricia Faison-Ball

Patricia Faison-Ball
Senior Petitions Attorney
Office of Petitions

UNITED STATES PATENT AND TRADEMARK OFFICE

OFFICE

COPY MAILED

JUL 20 2006

Director's Office
Office of Patent Publication

J C PATENTS, INC.
4 VENTURE, SUITE 250
IRVINE, CA 92618

In re Application of
CHIEN, CHIH-LING
Application No. 29/171,278
Filed: November 19, 2002
Attorney Docket No. JCLA10203-DS

DECISION ON PETITION

This is a decision on the Petition To Withdraw Holding Of Abandonment, received in the United States Patent & Trademark (USPTO) via facsimile transmission on November 23, 2005.

The petition is **DISMISSED**. Any request for reconsideration of this decision, or as explained below, filing a petition seeking revival under 37 CFR § 1.137, must be filed within TWO (2) MONTHS from the mail date of this decision.

The above-identified application was held abandoned for applicant's failure to timely pay the issue fee, as required in the Notice of Allowance and Fee(s) Due mailed February 10, 2005. The Notice of Abandonment, mailed on October 25, 2005 indicates, "The submitted fee of $0 is insufficient. A balance of $800 is due".

The Office acknowledges receipt of Part B – Fee(s) Transmittal on May 3, 2005, authorizing that the Issue Fee be charged to Deposit Account No. 50-0710. On May 4, 2005, when an attempt was made by the Office of Finance to charge the fees, there were insufficient funds in the Deposit Account to charge the required fee.

37 CFR 1.25 (a) and (b), which states in part:

> 1.25(a) ...An amount sufficient to cover all fee, services, copies, etc., requested must always be on deposit. Charges to accounts with insufficient funds will not be accepted."
>
> 1.25 (b) ...An authorization to charge a fee to a deposit account will not be considered payment of the fee on the date the authorization to charge the fee is effective as to the particular fee to be charged unless sufficient funds are present in the account to cover the fee.

In light of the non-compliance with 37 CFR 1.25, the holding of abandonment cannot be withdrawn.

Applicant may seek relief by filing a petition for Revival of Abandoned Application under CFR § 1.137 (a) or (b). (Forms are available at USPTO website http://www.uspto.gov)

- Under 37 CFR 1.137(a), a petition for the revival of an ***unavoidable*** abandoned application
- Under 37 CFR 1.137(b), a petition for the revival of an ***unintentionally*** abandoned application

Further inquires with respect to filing a petition under 37 CFR § 1.137 may be directed to the Office of Petitions at 571-272-3282 or addressed as follows:

By mail: Mail Stop Petitions
Commissioner for Patents
Office of Petitions
P O Box 1450
Alexandria, VA 22313-1450

Telephone inquires concerning this decision matter may be directed to the undersigned at 703 308-9250 Ext. 137.

Thomas E. Hawkins
Paralegal Specialist
Office of the Director
Office of Patent Publications

UNITED STATES PATENT AND TRADEMARK OFFICE

OFFICE

COPY MAILED

JUL 20 2006

Director's Office
Office of Patent Publication

J C PATENTS, INC.
4 VENTURE, SUITE 250
IRVINE, CA 92618

In re Application of :
CHIEN, CHIH-LING :
Application No. 29/171,278 : **DECISION ON PETITION**
Filed: November 19, 2002 :
Attorney Docket No. JCLA10203-DS :

This is a decision on the Petition To Withdraw Holding Of Abandonment, received in the United States Patent & Trademark (USPTO) via facsimile transmission on November 23, 2005.

The petition is **DISMISSED**. Any request for reconsideration of this decision, or as explained below, filing a petition seeking revival under 37 CFR § 1.137, must be filed within TWO (2) MONTHS from the mail date of this decision.

The above-identified application was held abandoned for applicant's failure to timely pay the issue fee, as required in the Notice of Allowance and Fee(s) Due mailed February 10, 2005. The Notice of Abandonment, mailed on October 25, 2005 indicates, "The submitted fee of $0 is insufficient. A balance of $800 is due".

The Office acknowledges receipt of Part B – Fee(s) Transmittal on May 3, 2005, authorizing that the Issue Fee be charged to Deposit Account No. 50-0710. On May 4, 2005, when an attempt was made by the Office of Finance to charge the fees, there were insufficient funds in the Deposit Account to charge the required fee.

37 CFR 1.25 (a) and (b), which states in part:

> 1.25(a) ...An amount sufficient to cover all fee, services, copies, etc., requested must always be on deposit. Charges to accounts with insufficient funds will not be accepted."
>
> 1.25 (b) ...An authorization to charge a fee to a deposit account will not be considered payment of the fee on the date the authorization to charge the fee is effective as to the particular fee to be charged unless sufficient funds are present in the account to cover the fee.

PAGE 4/12 * RCVD AT 7/25/2006 4:35:59 PM [Eastern Daylight Time] * SVR:USPTO-EFXRF-5/7 * DNIS:2738300 * CSID:9496600809 * DURATION (mm-ss):03-16

BEST AVAILABLE COPY

In light of the non-compliance with 37 CFR 1.25, the holding of abandonment cannot be withdrawn.

Applicant may seek relief by filing a petition for Revival of Abandoned Application under CFR § 1.137 (a) or (b). (Forms are available at USPTO website http://www.uspto.gov)

- Under 37 CFR 1.137(a), a petition for the revival of an ***unavoidable*** abandoned application
- Under 37 CFR 1.137(b), a petition for the revival of an ***unintentionally*** abandoned application

Further inquires with respect to filing a petition under 37 CFR § 1.137 may be directed to the Office of Petitions at 571-272-3282 or addressed as follows:

By mail: Mail Stop Petitions
Commissioner for Patents
Office of Petitions
P O Box 1450
Alexandria, VA 22313-1450

Telephone inquires concerning this decision matter may be directed to the undersigned at 703 308-9250 Ext. 137.

Thomas E. Hawkins

Thomas E. Hawkins
Paralegal Specialist
Office of the Director
Office of Patent Publications

BEST AVAILABLE COPY

UNITED STATES PATENT AND TRADEMARK OFFICE

COMMISSIONER FOR PATENTS
UNITED STATES PATENT AND TRADEMARK OFFICE
P.O. BOX 1450
ALEXANDRIA, VA 22313-1450
www.uspto.gov

COPY MAILED
OCT 17 2006
OFFICE OF PETITIONS

J C PATENTS, INC.
4 VENTURE, SUITE 250
IRVINE, CA 92618

In re Application of :
Chien : DECISION ON PETITION
Application No. 29/171,278 :
Filed: November 19, 2002 :
Atty. Docket No.: JCLA10203-DS :

This is a decision on the petition under 37 CFR 1.137(b), filed July 25, 2006, to revive the above-identified application.

The petition is **DISMISSED**.

Any request for reconsideration of this decision must be submitted within **TWO (2) MONTHS** from mail date of this decision. Extensions of time under 37 CFR 1.136(a) are permitted. The reconsideration request should include a cover letter entitled "Renewed Petition under 37 CFR 1.137(b)." This is not a final agency decision.

This application became abandoned May 11, 2005 for failure to timely submit a proper reply to the Notice of Allowance mailed February 10, 2005. The Notice set a three month statutory period of time for reply. Notice of Abandonment was mailed October 25, 2005.

A grantable petition pursuant to 37 CFR 1.137(b) must be accompanied by: (1) the required reply to the outstanding Office action or notice, unless previously filed; (2) the petition fee as set forth in 37 CFR 1.17(m); (3) a statement that the entire delay in filing the required reply from the due date for the reply until the filing of a grantable petition pursuant to 37 CFR 1.137(b) was unintentional; and (4) any terminal disclaimer (and fee set forth in 37 CFR 1.20(d)) required pursuant to 37 CFR 1.137(c).

The instant petition fails to satisfy requirement 37 CFR 1.137(b)(4). *See, also,* 37 CFR 1.137(d).

Any renewed petition must be accompanied by the required terminal disclaimer (including required fee).

Further correspondence with respect to this matter should be addressed as follows:

By mail: **Mail Stop Petition**
Commissioner for Patents
P.O. Box 1450
Alexandria, VA 22313-1450

By facsimile: (571) 273-8300

By hand delivery: U.S. Patent and Trademark Office
Customer Window, **Mail Stop Petition**
Randolph Building
401 Dulany Street
Alexandria, VA 22314

Telephone inquiries concerning this matter may be directed to the undersigned at (571) 272-3205.

Alesia M. Brown
Petitions Attorney
Office of Petitions

UNITED STATES PATENT AND TRADEMARK OFFICE

COMMISSIONER FOR PATENTS
UNITED STATES PATENT AND TRADEMARK OFFICE
P.O. BOX 1450
ALEXANDRIA, VA 22313-1450
www.uspto.gov

COPY MAILED
DEC 0 4 2006
OFFICE OF PETITIONS

J C PATENTS, INC.
4 VENTURE, SUITE 250
IRVINE, CA 92618

In re Application of :
Chien : DECISION ON PETITION
Application No. 29/171,278 :
Filed: November 19, 2002 :
Docket No.: JCLA10203-DS :

This is a decision on the renewed petition under 37 C.F.R. § 1.137(b), filed November 16, 2006.

The petition is hereby **GRANTED**.

This application became abandoned for failure to timely submit a proper reply to the Notice of Allowance (Notice) mailed February 10, 2005. Notice of Abandonment was mailed October 25, 2005.

A grantable petition pursuant to 37 C.F.R. § 1.137(b) must be accompanied by: (1) the required reply to the outstanding Office action or notice, unless previously filed; (2) the petition fee as set forth in 37 C.F.R. § 1.17(m); (3) a statement that the entire delay in filing the required reply from the due date for the reply until the filing of a grantable petition pursuant to 37 C.F.R. § 1.137(b) was unintentional; and (4)any terminal disclaimer (and fee set forth in 37 C.F.R. § 1.20(d)) required pursuant to 37 C.F.R. § 1.137(c).

The instant petition has been reviewed and found in compliance with the provisions of 37 C.F.R. § 1.137(b). Accordingly, the failure to timely submit a proper reply to the Notice is accepted as having been unintentionally delayed.

This application will be forwarded to the Office of Patent Publication for further processing.

Telephone inquiries concerning this matter may be directed to the undersigned at (571) 272-3205.

Alesia M. Brown
Petitions Attorney
Office of Petitions

SPE RESPONSE FOR CERTIFICATE OF CORRECTION

Paper No.: _____

DATE : June 21, 2006

TO SPE OF : ART UNIT 2912

SUBJECT : Request for Certificate of Correction for Appl. No.: 29/171285 Patent No.: D,495,388 S

Please respond to this request for a certificate of correction within 7 days.

Please review the requested changes/corrections as shown in the **COCIN** document(s) in the IFW application image. No new matter should be introduced, nor should the scope or meaning of the claims be changed.

Please complete the response (see below) and forward the completed response to scanning using document code **COCX**.

Elisha Evans
Certificates of Correction Branch

703-308-9390 ext. 110

Thank You For Your Assistance

The request for issuing the above-identified correction(s) is hereby:
Note your decision on the appropriate box.

- ☑ **Approved** — **All** changes apply.
- ☐ **Approved in Part** — Specify below which changes **do not** apply.
- ☐ **Denied** — State the reasons for denial below.

Comments: _____

STELLA M. REID
SUPERVISORY PATENT EXAMINER
SPE

2912
Art Unit

UNITED STATES PATENT AND TRADEMARK OFFICE

JUN 10 2004

Commissioner for Patents
United States Patent and Trademark Office
P.O. Box 1450
Alexandria, VA 22313-1450
www.uspto.gov

LEARY & ASSOCIATES
3900 NEWPARK MALL RD.
THIRD FLOOR, SUITE 317
NEWARK, CA 94560

#5

In re Application of	:
Mark Lizenbery	:
Serial No.: 29/171,293	: PETITION DECISION
Filed: November 19, 2002	:
Attorney Docket No.: LIZ1072CIP	:

This is a decision on applicant's petition to revive patent application under 37 CFR 1.137(b), filed March 8, 2004, to revive an unintentionally abandoned application.

This application became abandoned for failure to respond to the Notice to File Missing Parts of Nonprovisional Application, mailed December 19, 2002, which gave applicant two months to filed an oath or declaration, and the surcharge. As no response was received, a Notice of Abandonment was mailed September 8, 2003. This petition followed.

A grantable petition under 37 CFR 1.137(b), as revised December 1, 1997, requires four items: (1) a petition and petition fee; (2) a complete response if not earlier made; (3) a statement that the entire period of delay in prosecution was unintentional; and (4) a terminal disclaimer and disclaimer fee. Applicant has met these requirements.

Applicant's petition is **GRANTED**.

The application will be forwarded to an Examiner for initial examination in due course.

Should there be any questions with respect to this decision, please contact Sandra Morris; by mail addressed to: Director, Technology Center 3700/2900, P.O. Box 1450, Alexandria, VA 22313-1450; or by telephone at (571) 272-2622.

John Kittle
Director, Technology Center 3700/2900

UNITED STATES PATENT AND TRADEMARK OFFICE

DEC 16 2004

COMMISSIONER FOR PATENTS
UNITED STATES PATENT AND TRADEMARK OFFICE
P.O. BOX 1450
ALEXANDRIA, VA 22313-1450
www.uspto.go

#8

TOMMY CHIANG
PO BOX 82-144
TAIPEI,
TAIWAN

In re Application of
Tommy Chiang
Serial No.: 29/171,408
Filed: November 22, 2002
Attorney Docket No.: FP9134

: PETITION DECISION

This is in response to applicant's Petition to Withdraw Holding of Abandonment submitted by facsimile April 29, 2004, which is being treated as a Petition under 37 CFR 1.181, based on not having received the Office action. The delay in acting upon this petition is regretted.

This petition is **GRANTED.**

This application was held abandoned based on applicant's failure to timely respond to the Notice of Allowance mailed July 1, 2003, which set a three month stautory period of time to respond. As no response was received by October 1, 2003, a Notice of Abandonment was mailed March 11, 2004. This petition followed.

Applicant has stated that the Notice of Allowance was never received, and a copy of the docket records confirms this. The case is now returned to pending status, and the abandonment is thereby withdrawn.

The application will be promptly forwarded to the Examiner for remailing of the Notice of Allowance and Issue Fee Due.

Should there be any questions with respect to this decision, please contact Sandra Morris; by mail addressed to: Director, Technology Center 3700/2900, P.O. Box 1450, Alexandria, VA 22313-1450; or by telephone at (571) 272-2622.

John Kittle
Director, Technology Center 3700/2900

UNITED STATES PATENT AND TRADEMARK OFFICE

JUN 10 2004

Commissioner for Patents
United States Patent and Trademark Office
P.O. Box 1450
Alexandria, VA 22313-1450
www.uspto.gov

TOMMY CHIANG
PO BOX 82-144
TAIPEI,
TAIWAN

In re Application of	:
Tommy Chiang	:
Serial No.: 29/171,411	: PETITION DECISION
Filed: November 22, 2002	:
Attorney Docket No.: FP9133	:

This is in response to applicant's Petition to Withdraw Holding of Abandonment faxed April 29, 2004, which is being treated as a Petition under 37 CFR 1.181, based on not having received the Office action.

This petition is **GRANTED.**

This application was held abandoned based on applicant's failure to timely respond to the Notice of Allowance mailed July 2, 2003, which set a three month stautory period of time to respond. As no response was received by October 2 2003, a Notice of Abandonment was mailed March 11, 2004. This petition followed.

Applicant has stated that the Notice of Allowance was never received, and a copy of the docket records confirms this. The case is now returned to pending status, and the abandonment is thereby withdrawn.

The application will be promptly forwarded to the Examiner for remailing of the Notice of Allowance and Issue Fee Due.

Should there be any questions with respect to this decision, please contact Sandra Morris; by mail addressed to: Director, Technology Center 3700/2900, P.O. Box 1450, Alexandria, VA 22313-1450; or by telephone at (571) 272-2622.

John Kittle
Director, Technology Center 3700/2900

UNITED STATES PATENT AND TRADEMARK OFFICE

Commissioner for Patents
United States Patent and Trademark Office
P.O. Box 1450
Alexandria, VA 22313-1450
www.uspto.gov

DAVIS & BUJOLD, P.L.L.C.
FOURTH FLOOR
500 N. COMMERCIAL STREET
MANCHESTER NH 03101-1151

COPY MAILED

JUN 12 2006

OFFICE OF PETITIONS

In re Application of :
Degelman, et al. :
Application No. 29/171,444 :
Filed: November 21, 2002 :
Attorney Docket No. DEGMAN D01AUS :

ON PETITION

This is a decision on the petition under 37 CFR 1.181, filed November 4, 2005, requesting that the Office withdraw the holding of abandonment of the above-identified application.

The petition under 37 CFR 1.181 is **GRANTED**.

This application was held abandoned for failure to respond in a timely manner to the non-final Office action, mailed February 18, 2005, which set forth an extendable 1 month period for reply. The Office contended that this application became abandoned on March 19, 2005 for failure to reply. A Notice of Abandonment was mailed on October 31, 2005.

Petitioners assert a reply was timely transmitted via facsimile to the Office on March 17, 2005. The Office has no record of receiving a reply. However, the copy of the transmittal form submitted with the instant petition contains a certificate of transmission citing a March 17, 2005 date of transmission.

Under 37 CFR 1.8(b), correspondence is considered timely filed if petitioner: supplies (1) a copy of the previously transmitted correspondence with a signed certificate of transmission affixed thereto (2) a statement which attests on a personal knowledge basis to the previous timely transmission. A copy of the sending unit's report confirming transmission may be used to support this statement. Furthermore, under 37 CFR 1.8(c), the Office may require additional evidence to determine if the correspondence was timely filed.

Petitioners have supplied persuasive evidence of facsimile transmission on March 17, 2005. The transmittal form bears a proper certificate of mailing, dated March 17, 2005, in compliance with the requirements of 37 C.F.R. § 1.8(a)(1) as set forth above. In addition, the person signing the certificate, Scott A. Daniels, had reasonable basis to expect that the correspondence would be transmitted on March 17, 2005.

In addition, petitioners have submitted their sending unit's confirmation page that shows 4 pages were successfully transmitted to 703 872-9322.

For future reference, facsimile transmissions (with few exceptions) **must** be sent to the centralized facsimile number – 571-273-8300-, or they will be deemed as informal/proposed responses. See MPEP 502.01 In the instant case, the examiner cited a 703 872-9322 facsimile number in the February 18, 2005 Office action. Therefore, petitioners' failure to use the centralized facsimile number is excused this time.

The petition under 37 CFR 1.181 is **granted**, the Notice of Abandonment is vacated, and the holding of abandonment is withdrawn. No petition fee has been or will be charged in connection with this matter.

After the mailing of this decision, the application file will be returned to Technology Center 2912 for consideration of the election filed on November 4, 2005 (certificate of facsimile transmission date May 17, 2005).

Telephone inquiries pertaining to this matter may be directed to the undersigned at (571) 272-3230.

Shirene Willis Brantley

Shirene Willis Brantley
Senior Petitions Attorney
Office of Petitions
Office of the Deputy Commissioner
for Patent Examination Policy

UNITED STATES PATENT AND TRADEMARK OFFICE

JUN 10 2004

Commissioner for Patents
United States Patent and Trademark Office
P.O. Box 1450
Alexandria, VA 22313-1450
www.uspto.gov

SAMSONITE CORPORATION
11200 EAST 45TH AVENUE
DENVER, CO 80239

#1

In re Application of	:
Clemens Van Himbeeck	:
Serial No.: 29/171,461	: PETITION DECISION
Filed: November 21, 2002	:
Attorney Docket No.: P69990	:

This is a decision on applicant's Information for Withdrawal of Notice of Abandonment, which is being treated as a Petition under 37 CFR 1.181 submitted April 7, 2004, to revive an unavoidably abandoned application.

This application became abandoned for failure to respond to the Office action mailed June 11, 2003, which set a two-month shortened statutory period to respond. As no response was received by August 11, 2003, a Notice of Abandonment was mailed March 19, 2004. Applicant then filed this petition.

Applicant has submitted that the response and extension of time were timely filed on September 29, 2003, and has submitted copies of the response with a Certificate of Mailing and a Post Card receipt. Therefore, it is clear that applicant timely responded to the Office action, and the application was abandoned in error.

Applicant's petition is **GRANTED.**

The application will be promptly forwarded to the Examiner for evaluation of applicant's response in due course.

Should there be any questions with respect to this decision, please contact Sandra Morris; by mail addressed to: Director, Technology Center 3700/2900, P.O. Box 1450, Alexandria, VA 22313-1450; or by telephone at (571) 272-2622.

John Kittle
Director, Technology Center 3700/2900

UNITED STATES PATENT AND TRADEMARK OFFICE

COMMISSIONER FOR PATENTS
UNITED STATES PATENT AND TRADEMARK OFFICE
P.O. BOX 1450
ALEXANDRIA, VA 22313-1450
www.uspto.gov

SAMSONITE CORPORATION
11200 EAST 45TH AVENUE
DENVER CO 80239

6/24/05

In re Application of
Bart Proot
Serial No.: 29/171,468
Filed: November 21, 2002
Attorney Docket No.: P70400

: PETITION DECISION

This is a decision on applicant's Petition under 37 CFR 1.137(b) received May 11, 2005, to revive an unintentionally abandoned application.

A review of the application shows that an Office action was mailed July 27, 2004, setting a two month shortened statutory period of time to respond. As no response was received by September 27, 2004, a Notice of Abandonment was mailed April 21, 2005. This petition followed.

A grantable petition under 37 CFR 1.137(b), as revised December 1, 1997, requires four items: (1) a petition and petition fee; (2) a complete response if not earlier made; (3) a statement that the entire period of delay in prosecution was unintentional; and (4) a terminal disclaimer and disclaimer fee. The requirement for a terminal disclaimer has been waived, as applicant submitted the petition within one month of the mailing of the Notice of Abandonment. Furthermore, the Petition for Extension of Time is dismissed as moot, as the application was already abandoned.

Applicant's petition is **GRANTED.**

The Terminal Disclaimer fee of $130.00 and the $1590.00 Extension of Time will be refunded to applicant's Deposit Account 19-0078, as directed.

The application will be forwarded to the Examiner for consideration of applicant's response in due course.

Should there be any questions with respect to this decision, please contact Sandra Morris; by mail addressed to: Director, Technology Center 1700/2900, P.O. Box 1450, Alexandria, VA 22313-1450; or by telephone at (571) 272-2622.

Jacqueline M. Stone

Jacqueline Stone
Director, Technology Center 1700/2900

OIPE JC112
MAY 11 2005
PATENT & TRADEMARK OFFICE

PTO/SB/22 (12-04)
Approved for use through 07/31/2006. OMB 0651-0031
U.S. Patent and Trademark Office; U.S. DEPARTMENT OF COMMERCE
Under the Paperwork Reduction Act of 1995, no persons are required to respond to a collection of information unless it displays a valid OMB control number.

PETITION FOR EXTENSION OF TIME UNDER 37 CFR 1.136(a) FY 2005 (Fees pursuant to the Consolidated Appropriations Act, 2005 (H.R. 4818).)	Docket Number (Optional) P70400
Application Number 29/171,468	Filed 11/21/2002
For FABRIC LUGGAGE HANDLE ASSEMBLY	
Art Unit 2914	Examiner Oliver, Catherine R.

This is a request under the provisions of 37 CFR 1.136(a) to extend the period for filing a reply in the above identified application.

The requested extension and fee are as follows (check time period desired and enter the appropriate fee below):

		Fee	Small Entity Fee	
☐	One month (37 CFR 1.17(a)(1))	$120	$60	$
☐	Two months (37 CFR 1.17(a)(2))	$450	$225	$
☐	Three months (37 CFR 1.17(a)(3))	$1020	$510	$
☒	Four months (37 CFR 1.17(a)(4))	$1590	$795	$ 1,590
☐	Five months (37 CFR 1.17(a)(5))	$2160	$1080	$

☐ Applicant claims small entity status. See 37 CFR 1.27.

☐ A check in the amount of the fee is enclosed.

☐ Payment by credit card. Form PTO-2038 is attached.

☐ The Director has already been authorized to charge fees in this application to a Deposit Account.

☒ The Director is hereby authorized to charge any fees which may be required, or credit any overpayment, to Deposit Account Number 19-0078. I have enclosed a duplicate copy of this sheet.

WARNING: Information on this form may become public. Credit card information should not be included on this form. Provide credit card information and authorization on PTO-2038.

I am the

☐ applicant/inventor.

☐ assignee of record of the entire interest. See 37 CFR 3.71. Statement under 37 CFR 3.73(b) is enclosed (Form PTO/SB/96).

☒ attorney or agent of record. Registration Number 28,576

☐ attorney or agent under 37 CFR 1.34. Registration number if acting under 37 CFR 1.34 _____

Signature — Date: 5/6/2005

Gregory W. O'Connor — Typed or printed name

303-373-6165 — Telephone Number

NOTE: Signatures of all the inventors or assignees of record of the entire interest or their representative(s) are required. Submit multiple forms if more than one signature is required, see below.

☒ Total of 2 forms are submitted.

This collection of information is required by 37 CFR 1.136(a). The information is required to obtain or retain a benefit by the public which is to file (and by the USPTO to process) an application. Confidentiality is governed by 35 U.S.C. 122 and 37 CFR 1.11 and 1.14. This collection is estimated to take 6 minutes to complete, including gathering, preparing, and submitting the completed application form to the USPTO. Time will vary depending upon the individual case. Any comments on the amount of time you require to complete this form and/or suggestions for reducing this burden, should be sent to the Chief Information Officer, U.S. Patent and Trademark Office, U.S. Department of Commerce, P.O. Box 1450, Alexandria, VA 22313-1450. DO NOT SEND FEES OR COMPLETED FORMS TO THIS ADDRESS. SEND TO: Commissioner for Patents, P.O. Box 1450, Alexandria, VA 22313-1450.

If you need assistance in completing the form, call 1-800-PTO-9199 and select option 2.

05/12/2005 MAHMED1 00000066 190078 29171468
03 FC:1254 1590.00 DA

OIPE
MAY 11 2005

PTO/SB/63 (09-04)
Approved for use through 07/31/2006. OMB 0651-0031
U.S. Patent and Trademark Office; U.S. DEPARTMENT OF COMMERCE
Under the Paperwork Reduction Act of 1995, no persons are required to a collection of information unless it displays a valid OMB control number.

TERMINAL DISCLAIMER TO ACCOMPANY PETITION

Docket Number (Optional) P70400

In re Application of: Bart Proot

Name:

Application Number: 29/171,468

Filed: 11/21/2002

For: FABRIC LUGGAGE HANDLE ASSEMBLY

The owner*, Samsonite Corporation of 100 percent interest in the above-identified application hereby disclaims a terminal part of the term of any patent granted the above-identified application equivalent to: (1) if the above-identified application is a design application, the period of abandonment of the above-identified application, and (2) if the above-identified application is a utility or plant application, the lesser of: (a) the period of abandonment of the application; or (b) the period extending beyond twenty years from the date on which the above-identified application was filed in the United States or, if the application contains a specific reference to an earlier filed application(s) under 35 U.S.C. 120, 121, or 365(c), from the date on which the earliest such application was filed. This disclaimer also applies to any patent granted on a utility or plant application filed before June 8, 1995, or a design application, that contains a specific reference under 35 U.S.C. 120, 121, or 365(c) to the above-identified application. This disclaimer is binding upon the grantee, and its successors or assigns.

Check either box 1 or 2 below, if appropriate.

1. [X] For submissions on behalf of an organization (e.g., corporation, partnership, university, government agency, etc.), the undersigned is empowered to act on behalf of the organization.

2. [ ] The undersigned is an attorney or agent of record. Registration Number _____.

SAMSONITE CORPORATION

By: _____ 5/6/2005

Signature — Date

Gregory W. O'Connor
Assistant Secretary — 303-373-6165

Typed or Printed Name — Telephone Number

[XX] Terminal disclaimer fee under 37 CFR 1.20(d) included.

WARNING: Information on this form may become public. Credit card information should not be included on this form. Provide credit card information and authorization on PTO-2038.

* Statement under 37 CFR 3.73(b) is required if terminal disclaimer is signed by the assignee (owner). Form PTO/SB/96 may be used for making this certification. See MPEP § 324.

This collection of information is required by 37 CFR 1.137. The information is required to obtain or retain a benefit by the public which is to file (and by the USPTO to process) an application. Confidentiality is governed by 35 U.S.C. 122 and 37 CFR 1.11 and 1.14. This collection is estimated to take 12 minutes to complete, including gathering, preparing, and submitting the completed application form to the USPTO. Time will vary depending upon the individual case. Any comments on the amount of time you require to complete this form and/or suggestions for reducing this burden, should be sent to the Chief Information Officer, U.S. Patent and Trademark Office, U.S. Department of Commerce, P.O. Box 1450, Alexandria, VA 22313-1450. DO NOT SEND FEES OR COMPLETED FORMS TO THIS ADDRESS. SEND TO: **Commissioner for Patents, P.O. Box 1450, Alexandria, VA 22313-1450.**

If you need assistance in completing the form, call 1-800-PTO-9199 and select option 2.

05/12/2005 MAHMED1 00000066 190078 29171468

02 FC:1814 130.00 DA

UNITED STATES PATENT AND TRADEMARK OFFICE

COMMISSIONER FOR PATENTS
UNITED STATES PATENT AND TRADEMARK OFFICE
P.O. BOX 1450
ALEXANDRIA, VA 22313-1450
www.uspto.gov

FEB 1 2 2005

WEI TE CHUNG
FOXCONN INTERNATIONAL, INC.
1650 MEMOREX DRIVE
SANTA CLARA CA 95050

In re Application of	
Wei Che Want	:
Serial No.: 29/171,493	:
Filed: November 21, 2002	: PETITION DECISION
Attorney Docket No.:	:
	:

This is a decision on applicant's Petition under 37 CFR 1.137(b) filed December 9, 2004, to revive an unintentionally abandoned application.

This application became abandoned for failure to respond to the Notice of Allowance mailed March 9, 2004, which set a three-month statutory period to pay the Issue fee and submit formal drawings. As no response was submitted by June 9, 2004, a Notice of Abandonment was mailed August 4, 2004. Applicant then filed this petition.

A grantable petition under 37 CFR 1.137(b), as revised December 1, 1997, requires four items: (1) a petition and petition fee; (2) a complete response if not earlier made; (3) a statement that the entire period of delay in prosecution was unintentional; and (4) a terminal disclaimer and disclaimer fee.

Applicant's petition is **GRANTED.**

The application will be forwarded to Publications Branch to be issued into a Patent in due course.

Should there be any questions with respect to this decision, please contact Sandra Morris; by mail addressed to: Director, Technology Center 1700/2900, P.O. Box 1450, Alexandria, VA 22313-1450; or by telephone at (571) 272-2622.

JMStone

Jacqueline Stone
Director, Technology Center 1700/2900

UNITED STATES PATENT AND TRADEMARK OFFICE

AUG 3 1 2004

COMMISSIONER FOR PATENTS
UNITED STATES PATENT AND TRADEMARK OFFICE
P.O. BOX 1450
ALEXANDRIA, VA 22313-1450
www.uspto.gov

Chong-Yong Liu
No. 2, Alley 492
Hai Tian Rd. Sec. 2
Tainan City TW TAIWAN

In re Application of	
Chong-Yong Liu	:
Serial No.: 29/171,505	:
Filed: November 20, 2002	: PETITION DECISION
Attorney Docket No.:	:
	:

This is in response to applicant's Petition to Withdraw Holding of Abandonment under 37 CFR 1.181 received July 22, 2004, based on not having received the Office action.

This petition is **GRANTED.**

This application was held abandoned based on applicant's failure to timely respond to the Notice of Allowance mailed February 27, 2004, which set a three month statutory period of time to respond. As no response was received by May 27, 2004, a Notice of Abandonment was mailed July 13, 2004. This petition followed.

Applicant has stated that the Notice was never received, and has included a statement including problems he has had with the mail in other patent applications as well. The case is now returned to pending status, and the abandonment is thereby withdrawn.

The application will be forwarded to the Examiner for remailing of the Notice of Allowance in due course.

Should there be any questions with respect to this decision, please contact Sandra Morris; by mail addressed to: Director, Technology Center 3700/2900, P.O. Box 1450, Alexandria, VA 22313-1450; or by telephone at (571) 272-2622.

John Kittle
Director, Technology Center 3700/2900

UNITED STATES PATENT AND TRADEMARK OFFICE

UNITED STATES DEPARTMENT OF COMMERCE
United States Patent and Trademark Office
Address: COMMISSIONER FOR PATENTS
P.O. Box 1450
Alexandria, Virginia 22313-1450
www.uspto.gov

APPLICATION NO.	FILING DATE	FIRST NAMED INVENTOR	ATTORNEY DOCKET NO.	CONFIRMATION NO.
29/171,505	11/20/2002	Chong-Yong Liu		4468

7590 06/15/2005

Chong-Yong Liu
No. 2, Alley 492
Hai Tian Rd. Sec. 2
Tainan City,
TAIWAN

EXAMINER
TARCZA, ROSEMARY K

ART UNIT	PAPER NUMBER
2911	

DATE MAILED: 06/15/2005

Please find below and/or attached an Office communication concerning this application or proceeding.

UNITED STATES PATENT AND TRADEMARK OFFICE

Commissioner for Patents
United States Patent and Trademark Office
P.O. Box 1450
Alexandria, VA 22313-1450
www.uspto.gov

6/14/05

In re Application of	:	
Chong-Yong Liu	:	
Serial Number : 29/171,505	:	WITHDRAWAL
Filed : November 20, 2002	:	FROM
For : RIM OF A GOLF CART WHEEL	:	ISSUE

The purpose of this communication is to inform you that the above-identified application is being withdrawn from issue pursuant to 37 CFR 1.313.

The application is being withdrawn to permit reopening of prosecution. The reasons therefore will be communicated to you by the examiner.

PTO records reveal that the issue fee has not been paid. If the issue fee has been submitted, the applicant may request a refund or may request that the fee be credited to a deposit account. However, applicant may wait until the application is either again found allowable or held abandoned. If the application is allowed, upon receipt of a new Notice of Allowance and Issue Fee Due, applicant may request that the previously submitted issue fee to applied toward payment of the issue fee in the amount identified on the new Notice of Allowance and Issue Fee Due. If the application is abandoned, applicant may request either a refund or a credit to a deposit account.

The application is being forwarded to the examiner for action.

JMStone

Jacqueline M. Stone, Director
Technology Center 1700
Chemical and Materials Engineering

Chong-Yong Liu
No. 2, Alley 492
Hai Tian Rd. Sec. 2
Tainan City
TAIWAN

UNITED STATES PATENT AND TRADEMARK OFFICE

COMMISSIONER FOR PATENTS
UNITED STATES PATENT AND TRADEMARK OFFICE
P.O. BOX 1450
ALEXANDRIA, VA 22313-1450
www.uspto.gov

Paper No. 8

KNOBBE MARTENS OLSON & BEAR LLP
2040 MAIN STREET
FOURTEENTH FLOOR
IRVINE CA 92614

COPY MAILED

SEP 02 2003

OFFICE OF PETITIONS

In re Application of
A. Michael Forlenza et al.
Application No. 29/171,584
Filed: November 21, 2002
Attorney Docket No. HITHOME.009DC1

DECISION GRANTING PETITION

This is a decision on the petition under 37 CFR 1.10 (c) filed August 8, 2003 by way of facsimile transmission to correct the filing date to November 21, 2002, rather than the presently accorded filing date of November 26, 2002.

Petitioner alleges that the application was deposited in Express Mail service on November 21, 2002. In support, on August 8, 2003, petitioner supplied a copy of Express Mail Label No. EV148845809US (the same Express Mail number found on the certificate of express mail accompanying the original application papers located in the official file). The "date-in" on the Express Mail Label is November 21, 2002.

In view of the above, the petition is granted and since no fee is due, none will be charged.

The application is being forwarded to the Office of Initial Patent Examination for correction of the **filing date to November 21, 2002** and for issuance of a corrected filing receipt.

Telephone inquiries related to this matter should be directed to the undersigned Petitions Attorney at 703-305-4497.

Patricia Faison-Ball

Patricia Faison-Ball
Senior Petitions Attorney
Office of Petitions

UNITED STATES PATENT AND TRADEMARK OFFICE

Commissioner for Patents
United States Patent and Trademark Office
P.O. Box 1450
Alexandria, VA 22313-1450
www.uspto.gov

FINNEGAN, HENDERSON, FARABOW,
GARRETT & DUNNER LLP
901 NEW YORK AVENUE, NW
WASHINGTON DC 20001-4413

6/24/05

In re Application of
Stephen Mark McAllister
Serial No.: 29/171,611
Filed: November 26, 2002
Attorney Docket No.: 04012.0357-00000

: PETITION DECISION

This is a decision on applicant's petition to revive patent application under 37 CFR 1.137(b), received June 2, 2005, to revive an unintentionally abandoned application.

This application became abandoned for failure to respond to the Office action mailed September 3, 2004, which set a three-month statutory period to respond. As no response was received by December 3, 2004, a Notice of Abandonment was mailed April 12, 2005. Applicant then filed this petition.

A grantable petition for a design application under 37 CFR 1.137(b), as revised December 1, 1997, requires four items: (1) a petition and petition fee; (2) a complete response if not earlier made; (3) a statement that the entire period of delay in prosecution was unintentional; and (4) a terminal disclaimer and disclaimer fee. The petition states that "the delay caused by the abandonment of the application was unintentional" will be accepted. It is construed as meaning that "the entire delay in filing the required reply from the due date for the reply until the filing of a grantable petition pursuant to 37 CFR 1.137(b) was unintentional." If this is an incorrect statement in view of the new rules, petitioner is required to provide a statement to that effect.

The filing of a Continued Prosecution Application is considered a proper response. The requirement for a terminal disclaimer has been waived, as the petition was filed within two months of the mailing of the Notice of Abandonment.

Applicant's petition is **GRANTED**.

As the application was already abandoned, the Petition for an Extension of Time has been dismissed. Therefore, the $1020.00 fee will be refunded to applicant's Deposit Account 06-0916, as directed.

The application will be forwarded to be processed into a CPA in due course.

Should there be any questions with respect to this decision, please contact Sandra Morris; by mail addressed to: Director, Technology Center 1700/2900, P.O. Box 1450, Alexandria, VA 22313-1450; or by telephone at (571) 272-2622.

Jacqueline M. Stone

Jacqueline Stone
Director, Technology Center 1700/2900

OIPE JC25
JUN 0 2 2005
PATENT & TRADEMARK OFFICE

PATENT
Customer No. 22,852
Attorney Docket No. 04012.0357.00000

IN THE UNITED STATES PATENT AND TRADEMARK OFFICE

In re Application of:	)	
	)	
Stephen Mark McALLISTER et al.	)	Group Art Unit: 2915
	)	
Application No. 29/171,611	)	Examiner: Davis, A.
	)	
Filed: November 26, 2002	)	Confirmation No.: 5043
	)	
For: CAPSULE LINK	)	

Mail Stop Petition
Commissioner for Patents
P.O. Box 1450
Alexandria, VA 22313-1450

Sir:

PETITION FOR EXTENSION OF TIME

Applicants hereby petition for a three-month extension of time to reply to the Final Office Action mailed September 3, 2004. A fee of $1,020.00 is enclosed.

Please grant any extensions of time required to enter this response and charge any additional required fees to our Deposit Account No. 06-0916.

06/03/2005 SZEWDIE1 00000033 29171611
05 FC:1253 1020.00 OP

Respectfully submitted,

FINNEGAN, HENDERSON, FARABOW,
GARRETT & DUNNER, L.L.P.

Dated: June 2, 2005

By: _____
Lawrence F. Galvin
Reg. No. 44,694

UNITED STATES PATENT AND TRADEMARK OFFICE

COMMISSIONER FOR PATENTS
UNITED STATES PATENT AND TRADEMARK OFFICE
P.O. BOX 1450
ALEXANDRIA, VA 22313-1450
www.uspto.gov

SIM & MCBURNEY
330 UNIVERSITY AVENUE
6TH FLOOR
TORONTO, ON M5G 1R7
CANADA

APR 18 2005

In re Application of
T. Kenneth Nayler
Serial No.: 29/171,820
Filed: December 2, 2002
Attorney Docket No.: 7424-14 DAR

: PETITION DECISION

This is a decision on applicant's petition to revive patent application under 37 CFR 1.137(a), received February 16, 2005, to revive an unintentionally abandoned application.

A review of the file history shows that the Office mailed a Notice of Allowance to applicant on May 28, 2004, setting a three-month statutory period to pay the Issue fee. The fee was received by the Office September 2, 2004; therefore, as the Issue fee was not received by August 30, 2004, a Notice of Abandonment was mailed September 24, 2004. This petition followed.

A petition under 37 CFR 1.137(a), as revised December 1, 1997, requires (1) a petition and petition fee of, (2) the proposed response or Issue Fee, (3) a terminal disclaimer and disclaimer fee in any design application, and (4) an adequate showing of the cause of unavoidable delay.

Applicant has documented that the response was not filed timely, due to an error concerning the mail not being picked up by Federal Express on August 27, 2004, as it was instructed to do. Applicant was unaware of the Federal Express error, and it had been assured that the package would be delivered. Therefore, as the delay was the result of an error with the pick up by Federal Express, and this error was the cause of the delay at issue, applicant has shown that the delay in submission of the formal drawings was unavoidable.

Applicant's petition under 37 CFR 1.137(a) is **GRANTED**.

The Terminal disclaimer fee of $65.00 and the Petition fee of $250.00 will be charged to applicant's Deposit Account 19-2253, as directed.

The application will be forwarded to Publications Branch to issue into a Patent in due course.

Should there be any questions with respect to this decision, please contact Sandra Morris; by mail addressed to: Director, Technology Center 1700/2900, P.O. Box 1450, Alexandria, VA 22313-1450; or by telephone at (571) 272-2622.

JMStone

Jacqueline Stone
Director, Technology Center 1700/2900

UNITED STATES PATENT AND TRADEMARK OFFICE

Commissioner for Patents
United States Patent and Trademark Office
P.O. Box 1450
Alexandria, VA 22313-1450
www.uspto.gov

LEACH PATENT SERVICES
5 EAST ALDINE DRIVE
HOCKESSIN, DE 19707

COPY MAILED

SEP 29 2005

OFFICE OF PETITIONS

In re Application of

Kenneth Strong

Application No. 29/171,858

Filed: December 2, 2002

Attorney Docket No. 1005.126

DECISION ON

PETITION

This is a decision on the petition under 37 CFR 1.137(b), filed August 5, 2005, to revive the above-identified application.

The petition is **granted**.

This application became abandoned on April 20, 2005, for failure to file timely new corrected drawings as required by the Notice of Allowability mailed January 19, 2005. The aforementioned notice set forth a three (3) month statutory period for reply. No reply was received within the allowable period. A Notice of Abandonment was mailed on August 4, 2005.

The new corrected drawings, filed July 27, 2005, are noted.

The application is being forwarded to the Office of Patent Publications for further processing.

Telephone inquiries concerning this matter may be directed to the undersigned at (571) 272-3222.

Kenya A. McLaughlin
Petitions Attorney
Office of Petitions

UNITED STATES PATENT AND TRADEMARK OFFICE

NOV 22 2004

Commissioner for Patents
United States Patent and Trademark Office
P.O. Box 1450
Alexandria, VA 22313-1450
www.uspto.gov

MERCHANT & GOULD PC
P.O. BOX 2903
MINNEAPOLIS, MN 55402-0903

#13

In re Application of	:
Bruce Ogren	:
Serial No.: 29/171,999	: PETITION DECISION
Filed: December 3, 2002	:
Attorney Docket No.: 2316.1761US01	:

This is a decision regarding applicant's Request to Withdraw the Notice of Abandonment, which is being treated as a Petition under 37 CFR 1.181, submitted September 1, 2004.

This application became abandoned for failure to respond to the Office action mailed September 12, 2003, which set a two-month statutory period to respond. As no response was received by November 12, 2004, a Notice of Abandonment was mailed July 1, 2004. Applicant then filed this petition.

Applicant has submitted that a response in the form of a Continued Prosecution Application was timely filed on December 12, 2003, and has included a copy of applicant's response with a Certificate of Mailing, Post Card Receipt and Express Mail receipts. Applicant should have included a Petition to Request a one-month Extension of Time with the CPA request; however, as applicant did include an authorization to charge any additional fees to applicant's Deposit Account, and the response was submitted timely, it is clear that the application was abandoned in error.

Applicant's petition is **GRANTED.**

The Extension of Time fee of $110.00 will be charged to applicant's Deposit Account 13-2725, as directed.

The application will be promptly forwarded to be processed as a CPA in due course.

Should there be any questions with respect to this decision, please contact Sandra Morris; by mail addressed to: Director, Technology Center 3700/2900, P.O. Box 1450, Alexandria, VA 22313-1450; or by telephone at (571) 272-2622.

John Kittle
Director, Technology Center 3700/2900

UNITED STATES PATENT AND TRADEMARK OFFICE

COMMISSIONER FOR PATENTS
UNITED STATES PATENT AND TRADEMARK OFFICE
P.O. BOX 1450
ALEXANDRIA, VA 22313-1450
www.uspto.gov

FEB 9 2004

GREENBLUM & BERNSTEIN, P.L.C.
1950 ROLAND CLARKE PLACE
RESTON VA 20191

In re Application of	:
Etienne Dill	:
Serial No.: 29/172,035	: PETITION DECISION
Filed: December 5, 2002	:
Attorney Docket No.: D23066	:

This is in response to applicant's Petition to Withdraw Abandonment of the Application, which is being treated as a Petition under 37 CFR 1.181, filed January 5, 2004.

Applicant's petition is **GRANTED**.

Applicant has provided a statement and submitted a copy of the docket records, showing that applicant did not receive the Office action. Therefore, the application was abandoned in error.

The application will be forwarded to the Examiner for prompt remailing of the Office action.

Should there be any questions with respect to this decision, please contact Sandra Morris; by mail addressed to: Director, Technology Center 3700/2900, P.O. Box 1450, Alexandria, VA 22313-1450; or by telephone at (703) 305-3102 or (571) 272-2657 after February 16, 2004.

John Kittle
Director, Technology Center 3700/2900

UNITED STATES PATENT AND TRADEMARK OFFICE

NOV 18 2004

Commissioner for Patents
United States Patent and Trademark Office
P.O. Box 1450
Alexandria, VA 22313-1450
www.uspto.gov

WILLIAM H. HOLLIMON
118 N. GADSDEN STEET
TALLAHASSEE, FL 32301

In re Application of	:
Darryl Beadle	:
Serial No.: 29/172,040	: PETITION DECISION
Filed: December 4, 2002	:
Attorney Docket No.: 07-528-05	:

This is a decision on applicant's Petition under 37 CFR 1.137(b) submitted September 2, 2004, to revive an unintentionally abandoned application.

This application became abandoned for failure to respond to the Notice of Allowance mailed May 18, 2004, which set a three-month statutory period to pay the Issue fee. As no reply was submitted by August 18, 2004, the application was abandoned. Applicant then filed this petition.

A grantable petition under 37 CFR 1.137(b), as revised December 1, 1997, requires four items: (1) a petition and petition fee; (2) a complete response if not earlier made; (3) a statement that the entire period of delay in prosecution was unintentional; and (4) a terminal disclaimer and disclaimer fee. The requirement for a terminal disclaimer has been waived, as the petition was submitted before the mailing of the Notice of Abandonment.

Applicant's petition is **GRANTED.**

The $665.00 Petition fee and $240.00 Issue fee will be charged to applicant's Deposit Account 50-3060, as directed.

The application will be forwarded to Publications Branch to be issued into a Patent in due course.

Should there be any questions with respect to this decision, please contact Sandra Morris; by mail addressed to: Director, Technology Center 3700/2900, P.O. Box 1450, Alexandria, VA 22313-1450; or by telephone at (571) 272-2622.

John Kittle
Director, Technology Center 3700/2900

UNITED STATES PATENT AND TRADEMARK OFFICE

#4

COMMISSIONER FOR PATENTS
UNITED STATES PATENT AND TRADEMARK OFFICE
P.O. BOX 1450
ALEXANDRIA, VA 22313-1450
www.uspto.gov

APR 16 2005

KEVIN G. MIERZWA
ARTZ & ARTZ, P.C.
28333 TELEGRAPH ROAD, SUITE 250
SOUTHFIELD MI 48034

In re Application of
Damon G. Depeyster
Serial No.: 29/172,212
Filed: December 9, 2002
Attorney Docket No.: 202-1158

: PETITION DECISION

This is a decision on applicant's Petition under 37 CFR 1.137(b) submitted November 17, 2003, to revive an unintentionally abandoned application. The extreme delay in acting upon this petition is regretted.

A review of the application shows that a Notice to File Missing Parts of Nonprovisional Application was mailed January 8, 2003, setting a two month period of time to respond. As no response was received by March 10, 2003, the application was abandoned. This petition followed.

A grantable petition under 37 CFR 1.137(b), as revised December 1, 1997, requires four items: (1) a petition and petition fee; (2) a complete response if not earlier made; (3) a statement that the entire period of delay in prosecution was unintentional; and (4) a terminal disclaimer and disclaimer fee. The requirement for a terminal disclaimer has been waived, as applicant submitted the petition before the mailing of the Notice of Abandonment. Furthermore, the Petition for Extension of Time is dismissed as moot, as the application was already abandoned.

Applicant's petition is **GRANTED.**

The Terminal Disclaimer fee of $110.00 and the $930.00 Extension of Time will be refunded to applicant's Deposit Account 50-0476, as directed.

The application will be forwarded to the Examiner for initial examination in due course.

Should there be any questions with respect to this decision, please contact Sandra Morris; by mail addressed to: Director, Technology Center 1700/2900, P.O. Box 1450, Alexandria, VA 22313-1450; or by telephone at (571) 272-2622.

JMStone

Jacqueline Stone
Director, Technology Center 1700/2900

UNITED STATES PATENT AND TRADEMARK OFFICE

COMMISSIONER FOR PATENTS
UNITED STATES PATENT AND TRADEMARK OFFICE
P.O. BOX 1450
ALEXANDRIA, VA 22313-1450
www.uspto.gov

NOV 25

THERESEA M.SEAL
C/O THE INVENTOR'S NETWORK, INC.
332 ACADEMY STREET
CARNEGIE, PA 15106

#7

In re Application of	:
Scott K. Meyer et al.	:
Serial No.: 29/172,218	: PETITION DECISION
Filed: November 9, 2002	:
Attorney Docket No.: TS11-0531	:

This is a decision on the Petition to Revive under 37 CFR 1.137(b), filed November 3, 2003, to revive an unintentionally abandoned application.

The petition is **DISMISSED**.

This application became abandoned for failure to respond to the Notice of Allowance and Issue Fee Due, mailed July 1, 2003, which set a three month shortened statutory period to submit the Issue Fee. As no response had been received by October 1, 2003, the application was abandoned. This petition followed.

A grantable petition under 37 CFR 1.137(b), as revised December 1, 1997, requires four items: (1) a petition and petition fee; (2) a complete response if not earlier made; (3) a statement that the entire period of delay in prosecution was unintentional; and (4) a terminal disclaimer and disclaimer fee. This petition lacks item (2), as applicant did not fully pay the Issue fee; the cost is $240.00; therefore, an additional $5.00 must be submitted before the application can issue. A terminal disclaimer and fee (4) should also be submitted, as they are required for design patent petitions.

Any renewed petition in order to be considered timely must be filed within TWO MONTHS of the date of mailing of this decision.

Should there be any questions with regard to this letter please contact Sandra Morris; by letter addressed to the Director, Technology Center 3700/2900, PO Box 1450, Alexandria VA 22313-1450; or by telephone at (703) 305-3102 or by facsimile transmission at (703) 305-5679.

John E. Kittle

John Kittle
Director, Technology Center 3700/2900

UNITED STATES
PATENT AND
TRADEMARK OFFICE

UNDER SECRETARY OF COMMERCE FOR INTELLECTUAL PROPERTY AND
DIRECTOR OF THE UNITED STATES PATENT AND TRADEMARK OFFICE
WASHINGTON, D.C. 20231
WWW.USPTO.GOV

#8

CLAYTON, HOWARTH & CANNON, P.C.
P.O. BOX 1909
SANDY, UT 84091

In re Application of	:	
John T. Forbis	:	DECISION ON
Serial No.: 29/172,295	:	PETITION TO MAKE SPECIAL
Filed: December 9, 2002	:	
For: Fence Panel	:	

This is in response to the petition applicant filed on December 9, 2002, to make the above-identified application special under the provisions of 37 CFR 1.102(d).

Applicant has satisfied the provisions set forth in M.P.E.P. 708.02, VIII, thus the petition is **GRANTED**.

The application will be forwarded to the examiner for action on the merits commensurate with this decision.

Should there be any questions with regard to this letter please contact John Kittle by letter addressed to the Director, Technology Center 3700/2900, Box Design, Washington, DC 20231, or by telephone at (703)308-0873 or by facsimile transmission at (703)308-3139.

John E. Kittle
Director
Technology Center 3700/2900

UNITED STATES PATENT AND TRADEMARK OFFICE

DEC 15 2004

COMMISSIONER FOR PATENTS
UNITED STATES PATENT AND TRADEMARK OFFICE
P.O. BOX 1450
ALEXANDRIA, VA 22313-1450
www.uspto.gov

RANKIN, HILL PORTER & CLARK, LLP
925 EUCLID AVENUE, SUITE 700
CLEVELAND, OH 44115-1450

In re Application of
Rick D. Meade
Serial No.: 29/172,311
Filed: December 10, 2002
Attorney Docket No.: MEA 14531

: PETITION DECISION

This is in response to applicant's Petition to Withdraw Holding of Abandonment under 37 CFR 1.181, filed October 18, 2004.

A review of the file history shows that a Notice of Allowability from the Examiner was mailed May 18, 2004. The Notice of Allowance and Issue Fee Due were inexplicably mailed later on October 19, 2004, with the due date to pay the Issue fee of January 19, 2005. Applicant paid the fee November 8, 2004; therefore, the application was never abandoned.

Applicant's petition is **MOOT.**

The application will be promptly forwarded to Publications Branch to be printed as a patent in due course.

Should there be any questions with respect to this decision, please contact Sandra Morris; by mail addressed to: Director, Technology Center 3700/2900, P.O. Box 1450, Alexandria, VA 22313-1450; or by telephone at (571) 272-2622.

John Kittle
Director, Technology Center 3700/2900

UNITED STATES PATENT AND TRADEMARK OFFICE

COMMISSIONER FOR PATENTS
UNITED STATES PATENT AND TRADEMARK OFFICE
P.O. BOX 1450
ALEXANDRIA, VA 22313-1450
www.uspto.gov

LARIVIERE, GRUBMAN & PAYNE, LLP
P.O. BOX 3140
MONTEREY, CA 93942

COPY MAILED

JUL 17 2003

OFFICE OF PETITIONS

In re Application of :
Kendrew Lee and Tan Bo Jun :
Application No. 29/172,541 : DECISION GRANTING PETITION
Filed: December 13, 2002 : UNDER 37 CFR 1.47(a)
Title: AA/AAA MULTI-POWER CELL :
DISPLAY PACKAGE, FOUR
EMBODIMENTS

This is in response to the "Petition Under 37 CFR 1.47(a)," filed May 28, 2003.

The petition is **granted**.

Petitioner has shown that the non-signing inventor cannot be located to join in the filing of the above-identified application.

The above-identified application and papers have been reviewed and found in compliance with 37 CFR 1.47(a). This application is hereby accorded Rule 1.47(a) status. As provided in Rule 1.47(c), this Office will forward notice of this application's filing to the non-signing inventor at the address given in the Declaration. Notice of the filing of this application will also be published in the Official Gazette.

The file is being forwarded to the Office of Initial Patent Examination for further processing.

Telephone inquiries regarding this decision should be directed to the undersigned at (703) 306-9200.

Edward J. Tannouse
Senior Petitions Attorney
Office of Petitions
United States Patent and Trademark Office

UNITED STATES PATENT AND TRADEMARK OFFICE

COMMISSIONER FOR PATENTS
UNITED STATES PATENT AND TRADEMARK OFFICE
P.O. BOX 1450
ALEXANDRIA, VA 22313-1450
www.uspto.gov

TAN BO JUN
WESTERN DISTRICT (BAI SHA) INDUSTRIAL DEVELOPMENT ZONE
JIANGMEN, GUANGDONG PROVINCE
CHINA (PRC)

COPY MAILED

JUL 17 2003

OFFICE OF PETITIONS

In re Application of
Kendrew Lee and Tan Bo Jun
Application No. 29/172,541
Filed: December 13, 2002
Title: AA/AAA MULTI-POWER CELL DISPLAY PACKAGE, FOUR EMBODIMENTS

Dear TAN BO JUN:

You are named as a joint inventor in the above identified United States patent application, filed under the provisions of 35 U.S.C. 116 (United States Code), and 37 CFR 1.47(a), Rules of Practice in Patent Cases. Should a patent be granted on the application you will be designated therein as a joint inventor.

As a named inventor you are entitled to inspect any paper in the file wrapper of the application, order copies of all or any part thereof (at a prepaid cost per 37 CFR 1.19) or make your position of record in the application. Alternatively, you may arrange to do any of the preceding through a registered patent attorney or agent presenting written authorization from you. If you care to join the application, counsel of record (see below) would presumably assist you. Joining in the application would entail the filing of an appropriate oath or declaration by you pursuant to 37 CFR 1.63.

Telephone inquiries regarding this communication should be directed to Petitions Attorney Edward Tannouse at (703) 306-9200. Requests for information regarding your application should be directed to the File Information Unit at (703) 308-2733. Information regarding how to pay for and order a copy of the application, or a specific paper in the application, should be directed to Certification Division at (703) 308-9726 or 1(800) 972-6382 (outside the Washington D.C. area).

Edward J. Tannouse
Petitions Attorney
Office of Petitions
United States Patent and Trademark Office

LARIVIERE, GRUBMAN & PAYNE, LLP
P.O. BOX 3140
MONTEREY, CA 93942

UNITED STATES PATENT AND TRADEMARK OFFICE

COMMISSIONER FOR PATENTS
UNITED STATES PATENT AND TRADEMARK OFFICE
P.O. BOX 1450
ALEXANDRIA, VA 22313-1450
www.uspto.gov

CLEMENTS/WALKER
THE ROXBOROUGH BUILDING
1901 ROXBOROUGH ROAD, SUITE 300
CHARLOTTE, NC 28211

COPY MAILED
JUL 12 2007
OFFICE OF PETITIONS

In re Patent No. D,508,517	:	
Issue Date: August 16, 2005	:	
Application No. 29/172,545	:	DECISION ON PETITION
Filed: December 13, 2002	:	
Attorney Docket No. 3614	:	

This is a decision on the petition under 37 CFR 1.182, filed February 12, 2007, requesting issuance of a duplicate Letters Patent for the above-identified patent.

The petition is **GRANTED**.

The Publishing Division is directed to issue a duplicate Letters Patent.

The $400 fee for the petition under 37 CFR 1.182 has been received.

Telephone inquiries concerning this decision may be directed to the undersigned at (571) 272-3208. Inquiries regarding the issuance of a duplicate Letters Patent may be directed to Krystal Paige in the Publishing Division at (703) 308-9250, Ext. 139.

A copy of this decision is being faxed to Publishing Division for issuance of a duplicate Letters Patent.

Karen Creasy
Petitions Examiner
Office of Petitions

cc: Krystal Paige, South Tower, 8th Floor, Room C32 (Fax No. (571) 270-9937)

UNITED STATES PATENT AND TRADEMARK OFFICE

Commissioner for Patents
United States Patent and Trademark Office
P.O. Box 1450
Alexandria, VA 22313-1450
www.uspto.gov

6/23/05

MELVIN A. HUNN
HILL & HUNN LLP
SUITE 1440
201 MAIN STREET
FORT WORTH, TX 76102

In re Application of
Peter Edward Arendt
Serial No.: 29/172,566
Filed: December 13, 2002
Attorney Docket No.: 0706MH-42171

: PETITION DECISION

This is a decision on applicant's petition to revive patent application under 37 CFR 1.137(b), submitted May 11, 2005, to revive an unintentionally abandoned application.

This application became abandoned for failure to respond to the Office action mailed July 30, 2004, which set a two-month shortened statutory period to respond. As no response was received by September 30, 2004, a Notice of Abandonment was mailed March 11, 2005. Applicant then filed this petition.

A grantable petition for a design application under 37 CFR 1.137(b), as revised December 1, 1997, requires four items: (1) a petition and petition fee; (2) a complete response if not earlier made; (3) a statement that the entire period of delay in prosecution was unintentional; and (4) a terminal disclaimer and disclaimer fee.

The requirement for a terminal disclaimer has been waived, as the petition was filed within one month of the mailing of the Notice of Abandonment. The petition states that "the delay in responding to the Office Action and in filing this petition was unintentional" will be accepted. It is construed as meaning that "the entire delay in filing the required reply from the due date for the reply until the filing of a grantable petition pursuant to 37 CFR 1.137(b) was unintentional." If this is an incorrect statement in view of the new rules, petitioner is required to provide a statement to that effect.

Applicant's petition is **GRANTED**.

The application will be forwarded to the Examiner for consideration of applicant's response in due course.

Should there be any questions with respect to this decision, please contact Sandra Morris; by mail addressed to: Director, Technology Center 1700/2900, P.O. Box 1450, Alexandria, VA 22313-1450; or by telephone at (571) 272-2622.

Jacqueline M. Stone

Jacqueline Stone
Director, Technology Center 1700/2900

UNITED STATES PATENT AND TRADEMARK OFFICE

COMMISSIONER FOR PATENTS
UNITED STATES PATENT AND TRADEMARK OFFICE
P.O. BOX 1450
ALEXANDRIA, VA 22313-1450
WWW.USPTO.GOV

Paper No. 6

LaRiviere, Grubman & Payne, LLP
P.O. Box 3140
Monterey, CA 93942

COPY MAILED

SEP 15 2003

OFFICE OF PETITIONS

In re Application of
Kendrew Lee and Tan Bo Jun
Application No. 29/172,626
Filed: December 13, 2002
Attorney Docket No. P1514
Title: C/D MULTI-POWER CELL
DISPLAY PACKAGE, TWO EMBODIMENTS

DECISION ACCORDING STATUS
UNDER 37 CFR § 1.47(a)

This is a decision on the "PETITION UNDER 37 C.F.R. § 1.47(a)," filed May 28, 2003.

The petition is **GRANTED**.

The above-identified application was filed on December 13, 2002, without an unexecuted oath or declaration. Accordingly, on February 4, 2003, a "Notice to File Missing Parts of Nonprovisional Application" was mailed, requiring an executed oath or declaration and a surcharge for late filing. This Notice set a period for reply of two months from the mailing date of the Notice, with extensions of time obtainable under § 1.136(a).

In response, rule 47 applicant filed the instant petition (and fee); the late surcharge; a declaration executed by inventor Lee on behalf of himself and on behalf of non-signing joint inventor Jun; and to make the reply timely, a petition for extension of time for response within the second month (and extension fee). Rule 47 applicant maintains that status under 37 CFR 1.47 is proper because joint inventor Jun cannot be reached or found to join in the application for patent.

A grantable petition under 37 CFR 1.47(a) requires: (1) proof that the non-signing inventor cannot be reached or refuses to sign the oath or declaration after having been presented with the application papers (specification, claims and drawings); (2) an acceptable oath or declaration in compliance with 35 U.S.C. §§

115 and 116; (3) the petition fee; and (4) a statement of the last known address of the non-signing inventor.

Petitioner has shown that the non-signing inventor cannot be reached or found to join in the filing of the above-identified application. On petition and by declaration of C. Kelley Crossman, and supporting documentary evidence, petitioner has shown that rule 47 applicant has been unable to reach or find inventor Jun, despite diligent effort, to join in the application.

The declaration filed May 28, 2003, and the petition have been reviewed and found in compliance with 37 CFR 1.47(a).

This application is hereby accorded Rule 1.47(a) status.

As provided in new Rule 1.47(c), this Office will forward notice of this application's filing to the non-signing inventor at the address given in the petition. Notice of the filing of this application will also be published in the Official Gazette.

The application file is being returned to the Office of Initial Patent Examination for completion of pre-examination processing.

Telephone inquiries regarding this decision should be directed to the undersigned at (703) 305-0309.

Nancy Johnson
Senior Petitions Attorney
Office of Petitions

UNITED STATES PATENT AND TRADEMARK OFFICE

COMMISSIONER FOR PATENTS
UNITED STATES PATENT AND TRADEMARK OFFICE
P.O. BOX 1450
ALEXANDRIA, VA 22313-1450
www.uspto.gov

AUG 31 2004

Douglas L. Tschida
633 Larpenteur Avenue West
Suite B
St. Paul MN 55113

In re Application of
Joel Betker
Serial No.: 29/ 172674
Filed: December 16, 2002
Attorney Docket No.: 202085

: PETITION DECISION

This is a decision on applicant's Petition to Withdraw Holding of Abandonment submitted July 20, 2004, based on not having received the Office action.

A review of the file history shows that the Office mailed an Office action on November 7, 2003, setting a one-month shortened statutory period to respond. As no response was received by December 8, 2003, a Notice of Abandonment was mailed on July 14 2004. This petition followed. Applicant has stated that as an Office action was not received, the holding of abandonment should be withdrawn.

> M.P.E.P. 711.03(c) gives appropriate guidance as to how to proceed when an Office action is not received. To establish non-receipt of an Office action, applicant must include a statement, attesting to the fact that applicant did not receive the communication, the showing required to establish non-receipt of an Office communication must include a statement from the practitioner stating that the Office communication was not received by the practitioner and attesting to the fact that a search of the file jacket and docket records indicates that the Office communication was not received. A copy of the docket record where the non-received Office communication would have been entered had it been received and docketed must be attached to and referenced in practitioner's statement. See Notice entitled "Withdrawing the Holding of Abandonment When Office Actions Are Not Received," 1156 O.G. 53 (November 16, 1993).
>
> The showing outlined above may not be sufficient if there are circumstances that point to a conclusion that the Office action may have been lost after receipt rather than a conclusion that the Office action was lost in the mail (e.g., if the practitioner has a history of not receiving Office actions). Evidence of non-receipt of an Office communication or action (e.g., Notice of Abandonment or an advisory action) other than that action to which reply was required to avoid abandonment would not warrant withdrawal of the holding of abandonment.

Should applicant be certain of the non-receipt of the Rejection, a petition under 37 CFR 1.181 may be submitted; however the petition **would require proof of non-receipt** of the Office Action, as stated above. Evidence from applicant is required before this petition can be granted.

Should there be any questions with respect to this decision, please contact Sandra Morris; by mail addressed to: Director, Technology Center 3700/2900, P.O. Box 1450, Alexandria, VA 22313-1450; or by telephone at (571) 272-2622.

John Kittle
Director, Technology Center 3700/2900

UNITED STATES PATENT AND TRADEMARK OFFICE

COMMISSIONER FOR PATENTS
UNITED STATES PATENT AND TRADEMARK OFFICE
P.O. BOX 1450
ALEXANDRIA, VA 22313-1450
www.uspto.gov

DEC 15 2004

Douglas L. Tschida
Suite B
633 Larpenteur Avenue West
St. Paul MN 55113

RECEIVED
DEC 1 2004

RECEIVED
DEC 1 2004

In re Application of
Joel Betker
Serial No.: 29/172,674
Filed: December 16, 2002
Attorney Docket No.: 202085

: PETITION DECISION

This is in response to applicant's renewed Petition to Withhold Abandonment under 37 CFR 1.181, filed September 10, 2004, due to non-receipt of the Office action.

A review of the file history shows that the Office mailed an Office action on November 7, 2003, setting a one-month shortened statutory period of time to respond. As no response was received by December 8, 2003, a Notice of Abandonment was mailed on July 14, 2004. Applicant filed a petition on July 20, 2004, which was dismissed as not enough evidence was submitted; this petition followed.

Applicant has stated that he never received a copy of the Office action, and has submitted docket records and correspondence with applicant which proves non-receipt of the Office action. Therefore, the Notice of Abandonment will be rescinded, and returned to pending status.

Applicant's petition is **GRANTED.**

The application will be promptly forwarded to the Examiner for remailing of the Office action in due course.

Should there be any questions with respect to this decision, please contact Sandra Morris; by mail addressed to: Director, Technology Center 3700/2900, P.O. Box 1450, Alexandria, VA 22313-1450; or by telephone at (571) 272-2622.

John Kittle
Director, Technology Center 3700/2900

Best Available Copy

UNITED STATES PATENT AND TRADEMARK OFFICE

COMMISSIONER FOR PATENTS
UNITED STATES PATENT AND TRADEMARK OFFICE
P.O. BOX 1450
ALEXANDRIA, VA 22313-1450
www.uspto.gov

DEC 15 2004

Douglas L. Tschida
Suite B
633 Larpenteur Avenue West
St. Paul MN 55113

In re Application of
Joel Betker
Serial No.: 29/172,674
Filed: December 16, 2002
Attorney Docket No.: 202085

: PETITION DECISION

This is in response to applicant's renewed Petition to Withhold Abandonment under 37 CFR 1.181, filed September 10, 2004, due to non-receipt of the Office action.

A review of the file history shows that the Office mailed an Office action on November 7, 2003, setting a one-month shortened statutory period of time to respond. As no response was received by December 8, 2003, a Notice of Abandonment was mailed on July 14, 2004. Applicant filed a petition on July 20, 2004, which was dismissed as not enough evidence was submitted; this petition followed.

Applicant has stated that he never received a copy of the Office action, and has submitted docket records and correspondence with applicant which proves non-receipt of the Office action. Therefore, the Notice of Abandonment will be rescinded, and returned to pending status.

Applicant's petition is **GRANTED.**

The application will be promptly forwarded to the Examiner for remailing of the Office action in due course.

Should there be any questions with respect to this decision, please contact Sandra Morris; by mail addressed to: Director, Technology Center 3700/2900, P.O. Box 1450, Alexandria, VA 22313-1450; or by telephone at (571) 272-2622.

John Kittle
Director, Technology Center 3700/2900

UNITED STATES PATENT AND TRADEMARK OFFICE

COMMISSIONER FOR PATENTS
UNITED STATES PATENT AND TRADEMARK OFFICE
P.O. BOX 1450
ALEXANDRIA, VA 22313-1450
www.uspto.go

JUL 27 2004

#7

LINIAK, BERENATO & WHITE
Suite 240
6550 Rock Spring Drive
Bethesda MD 20817

In re Application of	
Saied Hussaini	:
Serial No.: 29/172,772	:
Filed: December 18, 2002	: PETITION DECISION
Attorney Docket No.: 8312.118	:
	:

This is a decision on the Petition under 37 CFR 1.137(b), filed June 25, 2004, to revive the above identified abandoned application based on unintentional circumstances.

A review of the file history shows that the examiner mailed an Office action to applicant November 3, 2003, setting a three-month shortened statutory period to respond. As no response was filed by February 3, 2004, a Notice of Abandonment was mailed June 25, 2004. This petition followed.

A petition under 37 CFR 1.137(b), as revised December 1, 1997, requires (1) a petition and petition fee, (2) the proposed response, (3) a terminal disclaimer and disclaimer fee of $55.00 in any design application, and (4) an adequate showing of the cause of unintentional delay. As this Petition was filed before the mailing of the Notice of Abandonment, the requirement for a Terminal Disclaimer has been waived.

Applicant's petition under 37 CFR 1.137(b) is **GRANTED**.

The application will be forwarded to the Examiner for evaluation of applicant's response in due course.

Should there be any questions with respect to this decision, please contact Sandra Morris; by mail addressed to: Director, Technology Center 3700/2900, P.O. Box 1450, Alexandria, VA 22313-1450; or by telephone at (571) 272-2622.

John Kittle
Director, Technology Center 3700/2900

UNITED STATES PATENT AND TRADEMARK OFFICE

NOV 17 2004

Commissioner for Patents
United States Patent and Trademark Office
P.O. Box 1450
Alexandria, VA 22313-1450
www.uspto.gov

GARY MCFARRON ESQ.
COOK, ALEX, MCFARRON, MANZO,
CUMMINGS & MEHLER, LTD.
200 W. ADAMS ST., SUITE 2850
CHICAGO, IL 60606

In re Application of	:
Janet S. Nelson et al.	:
Serial No.: 29/172,879	: PETITION DECISION
Filed: December 18, 2002	:
Attorney Docket No.: NEL 101 (0318-0029)	:

This is in response to applicants' Petition to Withdraw Abandonment under 37 CFR 1.181, filed March 23, 2004. The delay in acting upon this petition is regretted.

A review of the file history shows that the Office mailed a Restriction requirement on July 1, 2003, setting a one-month shortened statutory period to respond. As no response was received by August 1, 2003, a Notice of Abandonment was mailed on March 2, 2004. This petition followed.

Applicant has provided a copy of the response, which includes a Certificate of Mailing date of July 28, 2003, and a return receipt post card stamped July 31, 2003. Therefore, the response was timely filed, and the application was abandoned in error.

Applicants' petition is **GRANTED.**

The application will be promptly forwarded to the examiner for evaluation of applicants' response in due course.

Should there be any questions with respect to this decision, please contact Sandra Morris; by mail addressed to: Director, Technology Center 3700/2900, P.O. Box 1450, Alexandria, VA 22313-1450; or by telephone at (571) 272-2622.

John E. Kittle

John Kittle
Director, Technology Center 3700/2900

UNITED STATES PATENT AND TRADEMARK OFFICE

COMMISSIONER FOR PATENTS
UNITED STATES PATENT AND TRADEMARK OFFICE
P.O. BOX 1450
ALEXANDRIA, VA 22313-1450
www.uspto.gov

NIXON & VANDERHYE, PC
1100 N GLEBE ROAD
8TH FLOOR
ARLINGTON VA 22201-4714

FEB 12 2005

In re Application of
H. Chaim Birnboim
Serial No.: 29/172,947
Filed: December 20, 2002
Attorney Docket No.: 25-353

: PETITION DECISION

This is in response to applicant's Petition to Reinstate Application, which is being treated as a Petition under 37 CFR 1.181, filed August 2, 2004, based on having responded to the Office action. The delay in acting upon this petition is regretted.

A review of the file history shows that a Notice of Allowance was mailed February 27, 2004, setting a three month statutory period to pay the Issue fee and submit formal drawings. The Issue fee was submitted May 19, 2004; however, upon failure to submit formal drawings by May 27, 2004, a Notice of Abandonment was mailed on July 27, 2004.

Applicant has stated that he submitted formal drawings February 20, 2004, and has submitted copies of the response. The drawings were not associated with the case until after the Examiner had issued the case; therefore, it appeared that applicant had not responded to the Examiner's requirement of submitting new drawings. However, as the response was timely filed and overcame the examiner's drawing objections, the application will be returned to pending status.

Applicant's petition is **GRANTED.**

The application will be promptly forwarded to Publications to be printed as a patent in due course.

Should there be any questions with respect to this decision, please contact Sandra Morris; by mail addressed to: Director, Technology Center 1700/2900, P.O. Box 1450, Alexandria, VA 22313-1450; or by telephone at (571) 272-2622.

JMStone

Jacqueline Stone
Director, Technology Center 1700/2900

UNITED STATES PATENT AND TRADEMARK OFFICE

COMMISSIONER FOR PATENTS
UNITED STATES PATENT AND TRADEMARK OFFICE
P.O. BOX 1450
ALEXANDRIA, VA 22313-1450
www.uspto.gov

NOV 18 2004

LARS S. JOHNSON, ESQ.
THE QUAKER OATS COMPANY
MAIL CODE 11-12
555 W. MONROE STREET
CHICAGO, IL 60661

In re Application of	
David A. Knight	:
Serial No.: 29/172,994	:
Filed: December 20, 2002	: PETITION DECISION
Attorney Docket No.: 40002-11975	:
	:

This is a decision on applicant's renewed Petition under 37 CFR 1.137(b) submitted October 6, 2004, to revive an unintentionally abandoned application.

A review of this application shows that an Office action was mailed January 13, 2004, giving applicant a three month shortened statutory period to respond. As no response was received by April 13, 2004, a Notice of Abandonment was mailed August 13, 2004. This petition followed.

A grantable petition under 37 CFR 1.137(b), as revised December 1, 1997, requires four items: (1) a petition and petition fee; (2) a complete response if not earlier made; (3) a statement that the entire period of delay in prosecution was unintentional; and (4) a terminal disclaimer and disclaimer fee. As the petition was filed within two months of the mailing of the Notice of Abandonment, the requirement for a terminal disclaimer was been waived.

Applicant's petition is **GRANTED.**

The terminal disclaimer fee of $110.00 will be refunded to applicant's Deposit Account 50-0503, as directed.

The application will be forwarded to the Examiner for evaluation of applicant's response in due course.

Should there be any questions with respect to this decision, please contact Sandra Morris; by mail addressed to: Director, Technology Center 3700/2900, P.O. Box 1450, Alexandria, VA 22313-1450; or by telephone at (571) 272-2622.

John Kittle
Director, Technology Center 3700/2900

UNITED STATES PATENT AND TRADEMARK OFFICE

COMMISSIONER FOR PATENTS
UNITED STATES PATENT AND TRADEMARK OFFICE
P.O. BOX 1450
ALEXANDRIA, VA 22313-1450
www.uspto.gov

NOV 18 2004

LARS S. JOHNSON, ESQ.
THE QUAKER OATS COMPANY
MAIL CODE 11-12
555 W. MONROE STREET
CHICAGO, IL 60661

In re Application of	
David A. Knight	:
Serial No.: 29/173,044	:
Filed: December 20, 2002	: PETITION DECISION
Attorney Docket No.: 40002-11983	:
	:

This is a decision on applicant's renewed Petition under 37 CFR 1.137(b) submitted October 6, 2004, to revive an unintentionally abandoned application.

A review of this application shows that an Office action was mailed January 13, 2004, giving applicant a three month shortened statutory period to respond. As no response was received by April 13, 2004, a Notice of Abandonment was mailed August 13, 2004. This petition followed.

A grantable petition under 37 CFR 1.137(b), as revised December 1, 1997, requires four items: (1) a petition and petition fee; (2) a complete response if not earlier made; (3) a statement that the entire period of delay in prosecution was unintentional; and (4) a terminal disclaimer and disclaimer fee. As the petition was filed before the mailing of the Notice of Abandonment, the requirement for a terminal disclaimer was been waived.

Applicant's petition is **GRANTED.**

The terminal disclaimer fee of $110.00 will be refunded to applicant's Deposit Account 50-0503, as directed.

The application will be forwarded to the Examiner for evaluation of applicant's response in due course.

Should there be any questions with respect to this decision, please contact Sandra Morris; by mail addressed to: Director, Technology Center 3700/2900, P.O. Box 1450, Alexandria, VA 22313-1450; or by telephone at (571) 272-2622.

John Kittle
Director, Technology Center 3700/2900

UNITED STATES
PATENT AND
TRADEMARK OFFICE

UNDER SECRETARY OF COMMERCE FOR INTELLECTUAL PROPERTY AND
DIRECTOR OF THE UNITED STATES PATENT AND TRADEMARK OFFICE
WASHINGTON, D.C. 20231
WWW.USPTO.GOV

JAN - 3 2003

#3

WILLIAM H. BENZ
BURNS, DOANE, SWECKER & MATHIS, L.L.P
P.O. BOX 1404
ALEXANDRIA, VA 22313-1404

In re Application of	:	
Rory W. Fuest	:	
Serial No.: 29/173,098	:	**REQUEST FOR EXPEDITED**
Filed: December 20, 2002	:	**EXAMINATION**
For: Sandal Outsole Design	:	

This is in response to the Request for expedited examination applicant filed December 20, 2002, to expedite the above-identified application under the provisions of 37 CFR 1.155.

Applicant has satisfied the provisions set forth in 37 CFR 1.155, thus the petition is **GRANTED**.

The application will be forwarded to the examiner for action on the merits commensurate with this decision.

Should there be any questions with regard to this letter please contact John Kittle by letter addressed to the Director, Technology Center 3700/2900, Box Expedited Design, Washington, DC 20231, or by telephone at (703)308-0873 or by facsimile transmission at (703)308-3139.

John E. Kittle
Director
Technology Center 3700/2900

UNITED STATES
PATENT AND
TRADEMARK OFFICE

JAN - 3 2003

UNDER SECRETARY OF COMMERCE FOR INTELLECTUAL PROPERTY AND
DIRECTOR OF THE UNITED STATES PATENT AND TRADEMARK OFFICE
WASHINGTON, D.C. 20231
WWW.USPTO.GOV

#3

WILLIAM H. BENZ
BURNS, DOANE, SWECKER & MATHIS, L.L.P
P.O. BOX 1404
ALEXANDRIA, VA 22313-1404

In re Application of	:	
Rory W. Fuest	:	
Serial No.: 29/173,099	:	**REQUEST FOR EXPEDITED**
Filed: December 20, 2002	:	**EXAMINATION**
For: Cleated Sandal Sole Design	:	

This is in response to the Request for expedited examination applicant filed December 20, 2002, to expedite the above-identified application under the provisions of 37 CFR 1.155.

Applicant has satisfied the provisions set forth in 37 CFR 1.155, thus the petition is **GRANTED**.

The application will be forwarded to the examiner for action on the merits commensurate with this decision.

Should there be any questions with regard to this letter please contact John Kittle by letter addressed to the Director, Technology Center 3700/2900, Box Expedited Design, Washington, DC 20231, or by telephone at (703)308-0873 or by facsimile transmission at (703)308-3139.

John E. Kittle
Director
Technology Center 3700/2900

UNITED STATES PATENT AND TRADEMARK OFFICE

Commissioner for Patents
United States Patent and Trademark Office
P.O. Box 1450
Alexandria, VA 22313-1450
www.uspto.gov

THOMPSON E. FEHR
GOLDENWEST COPORATE CENTER
SUITE 300
5025 ADAMS AVENUE
OGDEN, UT 84403

8/16/05

In re Application of
Dennis D. Spiers
Serial No.: 29/173,242
Filed: December 23, 2002
Attorney Docket No.: PSPIDR-D

: PETITION DECISION

This is a decision on applicant's petition to revive patent application under 37 CFR 1.137(b), filed July 5, 2005, to revive an unintentionally abandoned application.

This application became abandoned for failure to respond to the Notice of Allowance mailed December 1, 2004, which set a three-month statutory period to submit the Issue Fee and formal drawings. The Issue fee was received March 1, 2005; however, as no formal drawings were received, a Notice of Abandonment was mailed May 5, 2005. Applicant then filed this petition.

A grantable petition for a design application under 37 CFR 1.137(b), as revised December 1, 1997, requires four items: (1) a petition and petition fee; (2) a complete response if not earlier made; (3) a statement that the entire period of delay in prosecution was unintentional; and (4) a terminal disclaimer and disclaimer fee. The requirement for a terminal disclaimer has been waived, as the petition was filed two months of the mailing of the Notice of Abandonment.

Applicant's petition is **GRANTED**.

The application will be forwarded to Publication Division for printing as a patent in due course.

Should there be any questions with respect to this decision, please contact Sandra Morris; by mail addressed to: Director, Technology Center 1700/2900, P.O. Box 1450, Alexandria, VA 22313-1450; or by telephone at (571) 272-2622.

Jacqueline M. Stone

Jacqueline Stone
Director, Technology Center 1700/2900

UNITED STATES PATENT AND TRADEMARK OFFICE

DEC 15 2004

Commissioner for Patents
United States Patent and Trademark Office
P.O. Box 1450
Alexandria, VA 22313-1450
www.uspto.gov

HEWLETT-PACKARD COMPANY
INTELLECTUAL PROPERTY ADMINISTRATION
P.O. BOX 272400
FORT COLLINS, CO 80527-2400

In re Application of	:
Will Fetherolf	:
Serial No.: 29/173,254	: PETITION DECISION
Filed: September 26, 2001	:
Attorney Docket No.: 10013380-1	:

This is in response to applicant's Request to Withdraw Abandonment, which is being treated as a Petition under 37 CFR 1.181, submitted September 28, 2004.

A review of the file history shows that an Office action was mailed December 19, 2003, setting a three month shortened statutory period of time to respond. As no response was received by March 19, 2004, the application was abandoned.

Applicant has provided a copy of the response, which includes a Certificate of Mailing date of March 19, 2004. This paper was eventually matched with the case; therefore, the response was timely filed, and the application was abandoned in error.

Applicant's petition is **GRANTED.**

The application will be promptly forwarded to the Examiner for evaluation of applicant's response in due course.

As there are no fees associated with petitions granted under 37 CFR 1.181, the $130.00 fee will be refunded to applicant's Deposit Account 08-2025, as directed.

Should there be any questions with respect to this decision, please contact Sandra Morris; by mail addressed to: Director, Technology Center 3700/2900, P.O. Box 1450, Alexandria, VA 22313-1450; or by telephone at (571) 272-2622.

John Kittle
Director, Technology Center 3700/2900

UNITED STATES PATENT AND TRADEMARK OFFICE

COMMISSIONER FOR PATENTS
UNITED STATES PATENT AND TRADEMARK OFFICE
P.O. BOX 1450
ALEXANDRIA, VA 22313-1450
www.uspto.gov

12·15·04

HEWLETT-PACKARD COMPANY
INTELLECTUAL PROPERTY ADMINISTRATION
P.O. BOX 272400
FORT COLLINS, CO 80527-2400

In re Application of
Will Fetherolf
Serial No.: 29/173,254
Filed: September 26, 2001
Attorney Docket No.: 10013380-1

: PETITION DECISION

This is in response to applicant's Request to Withdraw Abandonment, which is being treated as a Petition under 37 CFR 1.181, submitted September 28, 2004.

A review of the file history shows that an Office action was mailed December 19, 2003, setting a three month shortened statutory period of time to respond. As no response was received by March 19, 2004, the application was abandoned.

Applicant has provided a copy of the response, which includes a Certificate of Mailing date of March 19, 2004. This paper was eventually matched with the case; therefore, the response was timely filed, and the application was abandoned in error.

Applicant's petition is **GRANTED.**

The application will be promptly forwarded to the Examiner for evaluation of applicant's response in due course.

As there are no fees associated with petitions granted under 37 CFR 1.181, the $130.00 fee will be refunded to applicant's Deposit Account 08-2025, as directed.

Should there be any questions with respect to this decision, please contact Sandra Morris; by mail addressed to: Director, Technology Center 3700/2900, P.O. Box 1450, Alexandria, VA 22313-1450; or by telephone at (571) 272-2622.

Sandra for
John Kittle
Director, Technology Center 3700/2900

UNITED STATES PATENT AND TRADEMARK OFFICE

Commissioner for Patents
United States Patent and Trademark Office
P.O. Box 1450
Alexandria, VA 22313-1450
www.uspto.gov

WEI TE CHUNG
FOXCONN INTERNATIONAL, INC.
1650 MEMOREX DRIVE
SANTA CLARA, CA 95050

COPY MAILED

OCT 13 2005

OFFICE OF PETITIONS

In re Application of	:	
Chin-Te Lai	:	
Application No. 29/173,353	:	ON PETITION
Filed: December 24, 2002	:	
Attorney Docket No.	:	

This is a decision on the petition under 37 CFR 1.137(b), filed September 19, 2005, to revive the above-identified application.

The petition is **GRANTED.**

The above-identified application became abandoned for failure to submit the Issue fee and publication fee in a timely manner in reply to the Notice of Allowance mailed April 27, 2005, which set a statutory period for reply of three (3) months. Accordingly, the above-identified application became abandoned on July 28, 2005.

The petition satisfies the conditions for revival pursuant to the provisions of 37 CFR 1.137(b) in that (1) the reply in the form of payment of the issue fee; (2) the petition and publication fees; and (3) the required statement of unintentional delay have been received. Accordingly, the issue fee is accepted as having been unintentionally delayed.

Telephone inquiries concerning this decision should be directed to the undersigned at (571) 272-3210.

This matter is being referred to the Publishing Division for further processing.

Irvin Dingle
Petitions Examiner
Office of Petitions

UNITED STATES PATENT AND TRADEMARK OFFICE

Commissioner for Patents
United States Patent and Trademark Office
P. O. Box 1450
Alexandria, VA 22313-1450
www.uspto.gov

KEVIN G. MIERZWA
ARTZ & ARTZ PLC
28333 TELEGRAPH ROAD, SUITE 250
SOUTHFIELD, MI 48034

COPY MAILED

SEP 12 2003

OFFICE OF PETITIONS

In re Application of :
Gordon Platto et al :
Application No. 29/173,438 : ON PETITION
Filed: December 30, 2002 :
Attorney Docket No. 202-1008 (FGT 1705 DUS)

This is a decision on the petition, filed September 3, 2003, under 37 CFR 1.313(c)(3) to withdraw the above-identified application from issue after payment of the issue fee.

The petition is **GRANTED**.

The above-identified application is hereby withdrawn from issue in favor of a continued prosecution application (CPA) under 37 CFR 1.53(d).

Petitioner is advised that the issue fee paid on July 11, 2003 in the parent application is not refundable nor can it be applied towards any new Notice of Allowance which may issue on the CPA filed September 3, 2003.

Telephone inquiries should be directed to Irvin Dingle at (703) 306-5684.

After receipt of the file in the Office of Petitions, the file will be forwarded to Technology Center AU 2911 for processing of the CPA.

Irvin Dingle
Petitions Examiner
Office of Petitions
Office of the Deputy Commissioner
for Patent Examination Policy

UNITED STATES PATENT AND TRADEMARK OFFICE

COMMISSIONER FOR PATENTS
UNITED STATES PATENT AND TRADEMARK OFFICE
P.O. BOX 1450
ALEXANDRIA, VA 22313-1450
www.uspto.gov

6/27/05

John S. Artz
Artz & Artz, P.C.
28333 Telegraph Rd., Ste. 250
Southfield MI 48034

In re Application of	
Craig Metros	:
Serial No.: 29/173,486	:
Filed: December 30, 2002	: PETITION DECISION
Attorney Docket No.: FGT 1747 DUS (202-1166A)	:

This is in response to applicant's Petition for Withdrawal Holding of Abandonment, which is being treated as a Petition under 37 CFR 1.181, filed October 26, 2004, based on having responded to the Office action. The delay in acting upon this petition is regretted.

A review of the file history shows that a Notice of Allowance was mailed November 14, 2003, setting a three month statutory period to pay the Issue fee. As no response was received by February 17, 2004, a Notice of Abandonment was mailed on August 4, 2004.

Applicant has stated that the Issue fee was timely paid, and has included a copy of the Issue fee transmittal with a Certificate of Transmission date of February 13, 2004, as well as an Auto-Reply Facsimile Transmission report from the Office. While this was not associated with the application, it is clear that the response was timely filed, and the Office in error abandoned the application.

Applicant's petition is **GRANTED.**

The application will be promptly forwarded to Publications to be printed as a patent in due course.

Should there be any questions with respect to this decision, please contact Sandra Morris; by mail addressed to: Director, Technology Center 1700/2900, P.O. Box 1450, Alexandria, VA 22313-1450; or by telephone at (571) 272-2622.

Jacqueline Stone
Director, Technology Center 1700/2900

UNITED STATES PATENT AND TRADEMARK OFFICE

Commissioner for Patents
United States Patent and Trademark Office
P. O. Box 1450
Alexandria, VA 22313-1450
www.uspto.gov

Paper No. 9

KEVIN G. MIERZWA
ARTZ & ARTZ PLC
SUITE 250
28333 TELEGRAPH ROAD
SOUTHFIELD, MI 48034

COPY MAILED

AUG 22 2003

OFFICE OF PETITIONS

In re Application of :
Gordon Platto et al :
Application No. 29/173,493 : ON PETITION
Filed: December 30, 2002 :
Att Dkt No. 202-1010 (FGT 1703 DUS :

This is a decision on the petition, filed August 19, 2003, under 37 CFR 1.313(c)(3) to withdraw the above-identified application from issue after payment of the issue fee.

The petition is **GRANTED**.

The above-identified application is hereby withdrawn from issue in favor of a continued prosecution application (CPA) under 37 CFR 1.53(d).

Petitioner is advised that the issue fee paid on June 11, 2003 in the parent application is not refundable nor can it be applied towards any new Notice of Allowance which may issue on the CPA filed August 19, 2003.

Telephone inquiries should be directed to the undersigned at (703) 305-8680.

Upon receipt of the file in the Office of Petitions, the file will be forwarded to Technology Center 2911 for processing of the CPA.

Frances Hicks
Frances Hicks
Petitions Examiner
Office of Petitions
Office of the Deputy Commissioner
for Patent Examination Policy

UNITED STATES PATENT AND TRADEMARK OFFICE

Commissioner for Patents
United States Patent and Trademark Office
P.O. Box 1450
Alexandria, VA 22313-1450
www.uspto.gov

PAUL D. GREELEY, ESQ.
OHLANDT, GREELEY, RUGGIERO & PERLE, L.L.P.
10TH FLOOR
ONE LANDMARK SQUARE
STAMFORD, CT 06901-2682

COPY MAILED

MAY 1 2 2005

OFFICE OF PETITIONS

In re Patent No. D502,099 :
Issue Date: February 22, 2005 :
Application No. 29/173,515 : ON PETITION
Filed: December 31, 2002 :
Title: PERIPHERY OF CAP FOR A :
TUBULAR DISPENSER

This is a decision on the petition filed April 25, 2005, which is being treated as a request under 37 CFR 3.81(b)[1] to correct the assignee on the front page of the above-identified patent by way of Certificate of Correction.

The petition is **dismissed**.

A request for a certificate of correction (accompanied by the fee set forth in 37 CFR 1.20(a)) must accompany the instant request. *See* 37 CFR 3.81(b).

Further correspondence with respect to this matter should be addressed as follows:

By mail: Mail Stop Petition
Commissioner for Patents
Box 1450
Alexandria, VA 22313

By FAX: (703) 872-9306
Attn: Office of Petitions

By hand: Customer Service Window
Randolph Building
401 Dulany Street
Alexandria, VA 22314

[1] *See* Official Gazette of June 22, 2004.

Telephone inquiries concerning this matter may be directed to the undersigned at (571) 272-3228.

Edward J. Tannouse
Petitions Attorney
Office of Petitions/Patent
United States Patent and Trademark Office

UNITED STATES PATENT AND TRADEMARK OFFICE

Commissioner for Patents
United States Patent and Trademark Office
P.O. Box 1450
Alexandria, VA 22313-1450
www.uspto.gov
DIW Mar-07

PAUL D. GREELEY, ESQ.
OHLANDT, GREELEY, RUGGIERO & PERLE, L.L.P.
10TH FLOOR
ONE LANDMARK SQUARE
STAMFORD CT 06901-2682

COPY MAILED

MAR 26 2007

OFFICE OF PETITIONS

In re Patent No. D502,099	:	
Issued: 22 February, 2005	:	
Application No. 29/173,515	:	ON PETITION
Filed: 31 December, 2002	:	
Atty Docket No. 1700.170USD	:	

This is a decision in reference to the petition filed on 26 September, 2005, which is treated as a renewed request under 37 CFR 3.81(b)[1] to correct the assignee on the front page of the above-identified patent by way of a Certificate of Correction.

The petition is **granted**.

As a certificate of correction correcting the assignee was issued on 22 March, 2006, no further action is necessary.

Telephone inquires concerning this matter may be directed to the undersigned at 571.272.3231.

D Wood
Douglas I. Wood
Senior Petitions Attorney
Office of Petitions

[1] See Official Gazette of 22 June, 2004.

UNITED STATES PATENT AND TRADEMARK OFFICE

AUG 3 1 2004

COMMISSIONER FOR PATENTS
UNITED STATES PATENT AND TRADEMARK OFFICE
P.O. BOX 1450
ALEXANDRIA, VA 22313-1450
www.uspto.go

LEWIS, RICE & FINGERSH, LC
ATTN: BOX IP DEPT.
500 NORTH BROADWAY
SUITE 2000
ST LOUIS MO 63102

COPY FOR YOUR INFORMATION

In re Application of	
Mark Nordstrom	:
Serial No.: 29/173,626	:
Filed: January 2, 2003	: PETITION DECISION
Attorney Docket No.: 26/1190D	:
	:

This is a decision on applicant's Petition under 37 CFR 1.137(b) submitted May 12, 2004, to revive an unintentionally abandoned application. The delay in acting upon this petition is regretted.

This application became abandoned for failure to respond to the Notice of Allowance mailed February 11, 2004, which set a three-month statutory period to pay the issue fee. As no response was received by May 11, 2004, this application was abandoned. Applicant then filed this petition.

A grantable petition under 37 CFR 1.137(b), as revised December 1, 1997, requires four items: (1) a petition and petition fee; (2) a complete response if not earlier made; (3) a statement that the entire period of delay in prosecution was unintentional; and (4) a terminal disclaimer and disclaimer fee. Because this petition was filed within one month of abandonment, the requirement for a terminal disclaimer has been waived.

Applicant's petition is **GRANTED.**

The Terminal Disclaimer fee of $110.00 will be refunded to applicant by Treasury Check in due course.

The application will be forwarded to Issue Branch to be processed as a patent in due course.

Should there be any questions with respect to this decision, please contact Sandra Morris; by mail addressed to: Director, Technology Center 3700/2900, P.O. Box 1450, Alexandria, VA 22313-1450; or by telephone at (571) 272-2622.

John Kittle
Director, Technology Center 3700/2900

UNITED STATES PATENT AND TRADEMARK OFFICE

COMMISSIONER FOR PATENTS
UNITED STATES PATENT AND TRADEMARK OFFICE
P.O. BOX 1450
ALEXANDRIA, VA 22313-1450
www.uspto.go

AUG 3 1 2004

LEWIS, RICE & FINGERSH, LC
ATTN: BOX IP DEPT.
500 NORTH BROADWAY
SUITE 2000
ST LOUIS MO 63102

In re Application of	
Mark Nordstrom	:
Serial No.: 29/173,626	:
Filed: January 2, 2003	: PETITION DECISION
Attorney Docket No.: 26/1190D	:
	:

This is a decision on applicant's Petition under 37 CFR 1.137(b) submitted May 12, 2004, to revive an unintentionally abandoned application. The delay in acting upon this petition is regretted.

This application became abandoned for failure to respond to the Notice of Allowance mailed February 11, 2004, which set a three-month statutory period to pay the issue fee. As no response was received by May 11, 2004, this application was abandoned. Applicant then filed this petition.

A grantable petition under 37 CFR 1.137(b), as revised December 1, 1997, requires four items: (1) a petition and petition fee; (2) a complete response if not earlier made; (3) a statement that the entire period of delay in prosecution was unintentional; and (4) a terminal disclaimer and disclaimer fee. Because this petition was filed within one month of abandonment, the requirement for a terminal disclaimer has been waived.

Applicant's petition is **GRANTED.**

The Terminal Disclaimer fee of $110.00 will be refunded to applicant by Treasury Check in due course.

The application will be forwarded to Issue Branch to be processed as a patent in due course.

Should there be any questions with respect to this decision, please contact Sandra Morris; by mail addressed to: Director, Technology Center 3700/2900, P.O. Box 1450, Alexandria, VA 22313-1450; or by telephone at (571) 272-2622.

John Kittle
Director, Technology Center 3700/2900

UNITED STATES PATENT AND TRADEMARK OFFICE

SEP 10 2004

Commissioner for Patents
United States Patent and Trademark Office
P.O. Box 1450
Alexandria, VA 22313-1450
www.uspto.gov

LEWIS, RICE & FINGSH, LC
ATTN: BOX IP DEPT.
500 NORTH BROADWAY
SUITE 2000
ST LOUIS, MO 63102

In re Application of	:
Mark Nordstrom	:
Serial No.: 29/173,626	: PETITION DECISION
Filed: January 2, 2003	:
Attorney Docket No.: 26/1190D	:

This is a decision on applicant's Petition under 37 CFR 1.137(b) submitted May 12, 2004, to revive an unintentionally abandoned application.

This application became abandoned for failure to respond to the Notice of Allowance mailed February 11, 2004, which set a three-month statutory period to pay the Issue fee. As no response was submitted by May 11, 2004, the application was abandoned. Applicant then filed this petition.

A grantable petition under 37 CFR 1.137(b), as revised December 1, 1997, requires four items: (1) a petition and petition fee; (2) a complete response if not earlier made; (3) a statement that the entire period of delay in prosecution was unintentional; and (4) a terminal disclaimer and disclaimer fee. The requirement for a terminal disclaimer has been waived, as the petition was submitted before the mailing of the Notice of Abandonment.

Applicant's petition is **GRANTED.**

The Terminal Disclaimer fee of $110.00 will be refunded to applicant by Treasury Check.

The application will be forwarded to Publications Branch to be issued into a Patent in due course.

Should there be any questions with respect to this decision, please contact Sandra Morris; by mail addressed to: Director, Technology Center 3700/2900, P.O. Box 1450, Alexandria, VA 22313-1450; or by telephone at (571) 272-2622.

John Kittle
Director, Technology Center 3700/2900

UNITED STATES PATENT AND TRADEMARK OFFICE

Commissioner for Patents
United States Patent and Trademark Office
P.O. Box 1450
Alexandria, VA 22313-1450
www.uspto.gov

LUTRON ELECTRONICS COMPANY, INC.
PATENT DEPARTMENT
7200 SUTER ROAD
COOPERSBURG, PA 18036

COPY MAILED

MAR 0 9 2006

OFFICE OF PETITIONS

In re Application of	:	
Spira, Joel S.	:	
Application No. 29/173,735	:	ON PETITION
Filed: January 2, 2003	:	
Attorney Docket No. 02-170 D2	:	

This is a decision on the petition under 37 C.F.R. § 1.137(b), filed February 17, 2006, to revive the above-identified application.

The petition is **DISMISSED**.

Any request for reconsideration must be submitted within TWO (2) MONTHS from the mail date of this decision. No further petition fee is required for the request. Extensions of time under 37 CFR 1.136(a) are permitted. The reconsideration request should include a cover letter entitled "Renewed Petition under 37 CFR 1.137(b)." This is **not** a final agency action within the meaning of 5 U.S.C. § 704.

A grantable petition under 37 CFR 1.137(b) must be accompanied by:
(1) the required reply,[1]
(2) the petition fee,
(3) a statement that the entire delay in filing the required reply from the due date for the reply until the filing of a grantable petition pursuant to 37 CFR 1.137(b) was unintentional, and
(4) a terminal disclaimer and fee if the application was filed on or before June 8, 1995 or if the application is a design application.

Where there is a question as to whether either the abandonment or the delay in filing a petition under 37 CFR 1.137 was unintentional, the Commissioner may require additional information.[2]

The instant petition lacks item (4). Since the instant application is a design application, a terminal disclaimer (with requisite fee) is required. A blank terminal disclaimer is enclosed for petitioner's convenience.

---

[1] In a nonprovisional application abandoned for failure to prosecute, the required reply may be met by the filing of a continuing application. In an application or patent, abandoned or lapsed for failure to pay the issue fee or any portion thereof, the required reply must be the payment of the issue fee or any outstanding balance thereof.

[2] See MPEP 711.03(c)(III)(C) and (D).

Further correspondence with respect to this matter should be addressed as follows:

By mail: Mail Stop PETITIONS
Commissioner for Patents
Post Office Box 1450
Alexandria, VA 22313-1450

By hand: Customer Window located at:
U.S. Patent and Trademark Office
Customer Service Window Randolph Building
401 Dulany Street
Alexandria, VA 22314

By fax: (571) 273-8300
ATTN: Office of Petitions

Any questions concerning this matter may be directed to the undersigned at (571) 272-3206.

Liana Chase
Petitions Examiner
Office of Petitions

Enclosure: PTO/SB/63

PTO/SB/63 (09-04)
Approved for use through 07/31/2006. OMB 0651-0031
U.S. Patent and Trademark Office; U.S. DEPARTMENT OF COMMERCE
Under the Paperwork Reduction Act of 1995, no persons are required to a collection of information unless it displays a valid OMB control number.

TERMINAL DISCLAIMER TO ACCOMPANY PETITION	Docket Number (Optional)

In re Application of:

Name:

Application Number:

Filed:

For:

The owner*, _____ of _____ percent interest in the above-identified application hereby disclaims a terminal part of the term of any patent granted the above-identified application equivalent to: (1) if the above-identified application is a design application, the period of abandonment of the above-identified application, and (2) if the above-identified application is a utility or plant application, the lesser of: (a) the period of abandonment of the application; or (b) the period extending beyond twenty years from the date on which the above-identified application was filed in the United States or, if the application contains a specific reference to an earlier filed application(s) under 35 U.S.C. 120, 121, or 365(c), from the date on which the earliest such application was filed. This disclaimer also applies to any patent granted on a utility or plant application filed before June 8, 1995, or a design application, that contains a specific reference under 35 U.S.C. 120, 121, or 365(c) to the above-identified application. This disclaimer is binding upon the grantee, and its successors or assigns.

Check either box 1 or 2 below, if appropriate.

1. ☐ For submissions on behalf of an organization (e.g., corporation, partnership, university, government agency, etc.), the undersigned is empowered to act on behalf of the organization.
2. ☐ The undersigned is an attorney or agent of record. Registration Number_____.

_____	_____
Signature	Date
_____	_____
Typed or Printed Name	Telephone Number

☐ Terminal disclaimer fee under 37 CFR 1.20(d) included.

WARNING: Information on this form may become public. Credit card information should not be included on this form. Provide credit card information and authorization on PTO-2038.

* Statement under 37 CFR 3.73(b) is required if terminal disclaimer is signed by the assignee (owner). Form PTO/SB/96 may be used for making this certification. See MPEP § 324.

This collection of information is required by 37 CFR 1.137. The information is required to obtain or retain a benefit by the public which is to file (and by the USPTO to process) an application. Confidentiality is governed by 35 U.S.C. 122 and 37 CFR 1.11 and 1.14. This collection is estimated to take 12 minutes to complete, including gathering, preparing, and submitting the completed application form to the USPTO. Time will vary depending upon the individual case. Any comments on the amount of time you require to complete this form and/or suggestions for reducing this burden, should be sent to the Chief Information Officer, U.S. Patent and Trademark Office, U.S. Department of Commerce, P.O. Box 1450, Alexandria, VA 22313-1450. DO NOT SEND FEES OR COMPLETED FORMS TO THIS ADDRESS. **SEND TO: Commissioner for Patents, P.O. Box 1450, Alexandria, VA 22313-1450.**

If you need assistance in completing the form, call 1-800-PTO-9199 and select option 2.

UNITED STATES PATENT AND TRADEMARK OFFICE

Commissioner for Patents
United States Patent and Trademark Office
P.O. Box 1450
Alexandria, VA 22313-1450
www.uspto.gov

LUCENT ELECTRONICS COMPANY, INC.
PATENT DEPARTMENT
7200 SUTER ROAD
COOPERSBURG, PA 18036

COPY MAILED

JUL 0 5 2006

OFFICE OF PETITIONS

In re Application of	:	
Spira, Joel S.	:	
Application No. 29/173,735	:	ON PETITION
Filed: January 2, 2003	:	
Attorney Docket No. 02-170 D2	:	

This is a decision on the renewed petition under 37 C.F.R. § 1.137(b), filed May 11, 2006, to revive the above-identified application.

The petition is **GRANTED.**

This matter is being referred to the Publishing Division for processing into a patent.

Telephone inquiries regarding this decision should be directed to the undersigned at (571) 272-3282.

Liana Chase
Petitions Examiner
Office of Petitions

UNITED STATES PATENT AND TRADEMARK OFFICE

Commissioner for Patents
United States Patent and Trademark Office
P.O. Box 1450
Alexandria, VA 22313-1450
www.uspto.gov

JUN 10 2004

#5

JOHN E WAGNER, ESQ.
LAW OFFICE OF JOHN E WAGNER
3541 OCEAN VIEW BOULEVARD
GLENDALE, CA 91208

In re Application of	:
Sharon A. Springer	:
Serial No.: 29/173,918	: PETITION DECISION
Filed: January 7, 2003	:
Attorney Docket No.: 01-8079-01	:

This is a decision on applicant's Request for Revival, which is being treated as a Petition under 37 CFR 1.181 submitted March 22, 2004, to revive an unavoidably abandoned application.

This application became abandoned for failure to respond to the Office action mailed July 7, 2003, which set a one-month shortened statutory period to respond. As no response was received by August 7, 2003, a Notice of Abandonment was mailed March 9, 2004. Applicant then filed this petition.

Applicant has submitted that the response was timely submitted, as evidenced from the copy of the response, which includes a Certificate of Mailing date of August 6, 2003. This paper was not matched with the application, due to the response being mislabeled with the incorrect serial number. However, it is clear that applicant did timely respond to the Office action.

Applicant's petition is **GRANTED.**

The application will be forwarded to the Examiner for evaluation of applicant's response in due course.

Should there be any questions with respect to this decision, please contact Sandra Morris; by mail addressed to: Director, Technology Center 3700/2900, P.O. Box 1450, Alexandria, VA 22313-1450; or by telephone at (571) 272-2622.

John Kittle
Director, Technology Center 3700/2900

UNITED STATES PATENT AND TRADEMARK OFFICE

COMMISSIONER FOR PATENTS
UNITED STATES PATENT AND TRADEMARK OFFICE
P.O. BOX 1450
ALEXANDRIA, VA 22313-1450
www.uspto.gov

JUL 24 2003

#6

FRANK H. SCHALLER
24 AVPM CIRCLE
NEEDHAM, MA 02494

In re Application of	:	
Frank Howard Schaller	:	
Serial No. 29/174,064	:	DECISION ON PETITION
Filed: January 10, 2003	:	
Title: Local Accent Pronunciation Aid	:	

This is in response to applicants' petition filed January 10, 2003, to make the above-identified application special under the provisions of 37 CFR 1.102(c), based on the age of the applicant.

Applicant has satisfied the provisions set forth in M.P.E.P. 708.02, IV. Therefore the petition is **GRANTED**.

The application will be forwarded to the examiner for action on the merits commensurate with this decision.

Should there be any questions with regard to this letter please contact John Kittle by letter addressed to the Director, Technology Center 3700/2900, Washington, DC 20231, or by telephone at (703) 308-0873 or by facsimile transmission at (703) 308-3139.

John E. Kittle
Director
Technology Center 3700/2900

UNITED STATES PATENT AND TRADEMARK OFFICE

NOV 18 2004

Commissioner for Patents
United States Patent and Trademark Office
P.O. Box 1450
Alexandria, VA 22313-1450
www.uspto.gov

KREMBLAS, FOSTER, PHILLIPS & POLLICK
7632 SLATE RIDGE BOULEVARD
REYNOLDSBURG, OH 43068

In re Application of	:
Graham C. Lowe	:
Serial No.: 29/174,100	: PETITION DECISION
Filed: January 10, 2003	:
Attorney Docket No.: LOWEX 100	:

This is a decision on applicant's Petition under 37 CFR 1.137(b) submitted September 10, 2004, to revive an unintentionally abandoned application.

This application became abandoned for failure to respond to the Notice of Allowance mailed January 16, 2004, which set a three-month statutory period to pay the Issue fee and submit formal drawings. The issue fee was paid February 18, 2004; however, as no formal drawings were submitted by April 16, 2004, a Notice of Abandonment was mailed August 13, 2004. Applicant then filed this petition.

A grantable petition under 37 CFR 1.137(b), as revised December 1, 1997, requires four items: (1) a petition and petition fee; (2) a complete response if not earlier made; (3) a statement that the entire period of delay in prosecution was unintentional; and (4) a terminal disclaimer and disclaimer fee. The requirement for a terminal disclaimer has been waived, as the petition was submitted within one month of the mailing of the Notice of Abandonment.

Applicant's petition is **GRANTED.**

The $55.00 terminal disclaimer fee will be credited to applicant's Deposit Account 13-3393, as directed.

The application will be forwarded to Publications Branch to be issued into a Patent in due course.

Should there be any questions with respect to this decision, please contact Sandra Morris; by mail addressed to: Director, Technology Center 3700/2900, P.O. Box 1450, Alexandria, VA 22313-1450; or by telephone at (571) 272-2622.

John Kittle
Director, Technology Center 3700/2900

UNITED STATES PATENT AND TRADEMARK OFFICE

AUG 3 1 2004

Commissioner for Patents
United States Patent and Trademark Office
P.O. Box 1450
Alexandria, VA 22313-1450
www.uspto.gov

LAWRENCE J SHURUPOFF
SUNBEAM PRODUCTS, INC.
2381 EXECUTIVE CENTER DRIVE
BOCA RATON, FL 33431

#6

In re Application of	:
Suppawat Kosumsuppamala	:
Serial No.: 29/174,137	: PETITION DECISION
Filed: January 9, 2003	:
Attorney Docket No.: SUNHAH-2-3987	:

This is a decision on applicant's Petition under 37 CFR 1.137(b) filed April 26, 2004, to revive an unintentionally abandoned application, which is being treated as a Petition under 37 CFR 1.181, based on not having received the Office action. The delay in acting upon this petition is regretted.

This petition is **GRANTED.**

This application was held abandoned based on applicant's failure to timely respond to the Notice of Allowance mailed June 3, 2003, which set a three month statutory period of time to respond. As no response was received by September 3, 2003, a Notice of Abandonment was mailed March 7, 2004. This petition followed.

Applicant has stated that the Notice of Allowance was never received, and a copy of the docket records that was submitted by facsimile on August 2, 2004 confirms this. The case is now returned to pending status, and the abandonment is thereby withdrawn.

The application will be promptly forwarded to the Examiner for prompt remailing of the Notice of Allowance and Issue Fee Due.

Should there be any questions with respect to this decision, please contact Sandra Morris; by mail addressed to: Director, Technology Center 3700/2900, P.O. Box 1450, Alexandria, VA 22313-1450; or by telephone at (571) 272-2622.

John Kittle
Director, Technology Center 3700/2900

UNITED STATES PATENT AND TRADEMARK OFFICE

COMMISSIONER FOR PATENTS
UNITED STATES PATENT AND TRADEMARK OFFICE
P.O. BOX 1450
ALEXANDRIA, VA 22313-1450
www.uspto.gov

#7

James C. Brown
2121 Skyhawk Drive
Fort Wayne IN 46815

In re Application of
James C. Brown
Serial No.: 29/174,180
Filed: January 13, 2003
Attorney Docket No.:

: PETITION DECISION

This is a decision on the Petition to Revive under 37 CFR 1.137(b), submitted by facsimile July 20, 2004, to revive an unintentionally abandoned application.

This application became abandoned for failure to respond to the Office action of November 10, 2003, which gave applicant a three month shortened statutory period of time to respond. As no response was received by January 10, 2004, a Notice of Abandonment was mailed June 21, 2004. This petition followed.

A grantable petition under 37 CFR 1.137(b), as revised December 1, 1997, requires four items: (1) a petition and petition fee; (2) a complete response if not earlier made; (3) a statement that the entire period of delay in prosecution was unintentional; and (4) a terminal disclaimer and disclaimer fee. Applicant's petition lacks items (1) the petition fee of $665.00; a response to the rejection (2); and a terminal disclaimer and $55.00 fee (4).

It is unclear if applicant received and responded to the Office action of November 10, 2003. If applicant did respond, then proof of this response along with a Certificate of Mailing should be submitted. If applicant did not receive the November 10, 2003 Office action, then applicant should submit proof that no correspondence was received from the Patent Office.

> M.P.E.P. 711.03(c) gives appropriate guidance as to how to proceed when an Office action is not received. To establish non-receipt of an Office action, applicant must include a statement, attesting to the fact that applicant did not receive the communication, the showing required to establish non-receipt of an Office communication must include a statement from the practitioner stating that the Office communication was not received by the practitioner and attesting to the fact that a search of the file jacket and docket records indicates that the Office communication was not received. A copy of the docket record where the non-received Office communication would have been entered had it been received and docketed must be attached to and referenced in practitioner's statement. See Notice entitled "Withdrawing the Holding of Abandonment When Office Actions Are Not Received," 1156 O.G. 53 (November 16, 1993).
>
> The showing outlined above may not be sufficient if there are circumstances that point to a conclusion that the Office action may have been lost after receipt rather than a conclusion that the Office action was lost in the mail (e.g., if the practitioner has a history of not receiving Office actions). Evidence of non-receipt of an Office communication or action (e.g., Notice of Abandonment or an advisory action) other than that action to

which reply was required to avoid abandonment would not warrant withdrawal of the holding of abandonment.

Since applicant is not an attorney, applicant should submit a verified statement and any additional evidence that would show that applicant did not in fact receive the communication from the Office. The statement and evidence should address the following questions: Where and how does applicant receive mail? How is the mail distributed? Does anyone else have access to or open the mail? Are there other incidents of lost or undelivered mail?

If applicant can prove that he did not receive the Office action, or the Patent Office lost his response to the Office action, then it would not be necessary to file a Petition under 37 CFR 1.137(b), and no fees would be required. However **proof of non-receipt** of the Office Action would be required, as stated above.

Any renewed petition in order to be considered timely must be filed within TWO MONTHS of the date of mailing of this decision.

Should there be any questions with respect to this decision, please contact Sandra Morris; by mail addressed to: Director, Technology Center 3700/2900, P.O. Box 1450, Alexandria, VA 22313-1450; or by telephone at (571) 272-2622.

John Kittle
Director, Technology Center 3700/2900

UNITED STATES PATENT AND TRADEMARK OFFICE

PET DEC

COMMISSIONER FOR PATENTS
UNITED STATES PATENT AND TRADEMARK OFFICE
P.O. BOX 1450
ALEXANDRIA, VA 22313-1450
www.uspto.gov

James C. Brown
2121 Skyhawk Drive
Fort Wayne IN 46815

In re Application of
James C. Brown
Serial No.: 29/174,180
Filed: January 13, 2003
Attorney Docket No.:

: PETITION DECISION

This is a decision on the renewed Petition to Revive under 37 CFR 1.137(b), received August 20, 2004, to revive an unintentionally abandoned application.

This application became abandoned for failure to respond to the Office action of November 10, 2003, which gave applicant a three month shortened statutory period of time to respond. As no response was received by January 10, 2004, a Notice of Abandonment was mailed June 21, 2004. Applicant filed a petition July 20, 2004, which was dismissed due to lack of evidence and funds; this petition followed.

Applicant has provided a copy of the response, which was submitted by facsimile on December 5, 2003. A copy of the Activity report was included, showing that the transmission to the Office was acceptable. As the serial number was not included on the cover sheet, it appears that the response was never matched with the application. Applicant is advised that **he must** sign and date all correspondence submitted to the Office.

Applicant's petition is **GRANTED.**

The application will be promptly forwarded to the Examiner for evaluation of applicant's response in due course.

Should there be any questions with respect to this decision, please contact Sandra Morris; by mail addressed to: Director, Technology Center 1700/2900, P.O. Box 1450, Alexandria, VA 22313-1450; or by telephone at (571) 272-2622.

JMStone
Jacqueline Stone
Director, Technology Center 1700/2900

UNITED STATES PATENT AND TRADEMARK OFFICE

Commissioner for Patents
United States Patent and Trademark Office
P.O. Box 1450
Alexandria, VA 22313-1450
www.uspto.gov

8/19/05

KATTEN MUCHIN ZAVIS ROSENMAN
575 MADISON AVENUE
NEW YORK, NY 10022-2585

In re Application of
Jonathan Willinger
Serial No.: 29/174,225
Filed: January 14, 2003
Attorney Docket No.: JWIL 20.178

: PETITION DECISION

This is a decision on applicant's petition to revive patent application under 37 CFR 1.137(b), filed April 21, 2005, to revive an unintentionally abandoned application.

This application became abandoned for failure to respond to the Notice of Allowance mailed November 30, 2004, which set a three-month statutory period to submit the Issue Fee. The Issue fee transmittal was received December 6, 2004; however, the issue fee was not enclosed. Therefore, as a complete response was not received by February 28, 2005, a Notice of Abandonment was mailed April 1, 2005. Applicant then filed this petition.

A grantable petition for a design application under 37 CFR 1.137(b), as revised December 1, 1997, requires four items: (1) a petition and petition fee; (2) a complete response if not earlier made; (3) a statement that the entire period of delay in prosecution was unintentional; and (4) a terminal disclaimer and disclaimer fee. The requirement for a terminal disclaimer has been waived, as the petition was filed within one month of the mailing of the Notice of Abandonment.

Applicant's petition is **GRANTED**.

The application will be forwarded to Publication Division for printing as a patent in due course.

Should there be any questions with respect to this decision, please contact Sandra Morris; by mail addressed to: Director, Technology Center 1700/2900, P.O. Box 1450, Alexandria, VA 22313-1450; or by telephone at (571) 272-2622.

Jacqueline M. Stone

Jacqueline Stone
Director, Technology Center 1700/2900

UNITED STATES PATENT AND TRADEMARK OFFICE

NOV 18 2004

Commissioner for Patents
United States Patent and Trademark Office
P.O. Box 1450
Alexandria, VA 22313-1450
www.uspto.gov

DONALD H EASON
C/O ULTIMATE SUPPORT SYSTEMS
2506 ZURICH DRIVE
P.O. BOX 470
FORT COLLINS, CO 80522

In re Application of	:
Donald H. Eason	:
Serial No.: 29/174,279	: PETITION DECISION
Filed: January 15, 2003	:
Attorney Docket No.:	:

This is a decision on applicant's Petition under 37 CFR 1.137(b) submitted August 23, 2004, to revive an unintentionally abandoned application.

This application became abandoned for failure to respond to the Notice of Allowance mailed March 15, 2004, which set a three-month statutory period to pay the Issue fee. As no reply was submitted by June 15, 2004, a Notice of Abandonment was mailed August 4, 2004. Applicant then filed this petition.

A grantable petition under 37 CFR 1.137(b), as revised December 1, 1997, requires four items: (1) a petition and petition fee; (2) a complete response if not earlier made; (3) a statement that the entire period of delay in prosecution was unintentional; and (4) a terminal disclaimer and disclaimer fee. The requirement for a terminal disclaimer has been waived, as the petition was submitted within one month of the mailing of the Notice of Abandonment.

Applicant's petition is **GRANTED.**

The application will be forwarded to Publications Branch to be issued into a Patent in due course.

Should there be any questions with respect to this decision, please contact Sandra Morris; by mail addressed to: Director, Technology Center 3700/2900, P.O. Box 1450, Alexandria, VA 22313-1450; or by telephone at (571) 272-2622.

John Kittle
Director, Technology Center 3700/2900

UNITED STATES PATENT AND TRADEMARK OFFICE

DEC 15 2004

Commissioner for Patents
United States Patent and Trademark Office
P.O. Box 1450
Alexandria, VA 22313-1450
www.uspto.gov

ATTN: NICHOLAS D. ROUSE
DUNLAP, CODDING & RODGERS, P.C.
P.O. BOX 16370
OKLAHOMA CITY, OK 73118

In re Application of	:
Corey Feit	:
Serial No.: 29/174,286	: PETITION DECISION
Filed: January 14, 2003	:
Attorney Docket No.: 35020.100	:

This is a decision on applicant's Petition under 37 CFR 1.137(b) received October 14, 2004, to revive an unintentionally abandoned application.

This application became abandoned for failure to fully respond to the Notice of Allowance mailed July 7, 2004, which set a three-month statutory period to pay the Issue fee and submit formal drawings. Applicant submitted formal drawings on August 9, 2004; however, as the Issue fee was not submitted by October 7, 2004, the application was abandoned. Applicant then filed this petition.

A grantable petition under 37 CFR 1.137(b), as revised December 1, 1997, requires four items: (1) a petition and petition fee; (2) a complete response if not earlier made; (3) a statement that the entire period of delay in prosecution was unintentional; and (4) a terminal disclaimer and disclaimer fee. The requirement for a terminal disclaimer has been waived, as the petition was submitted before the mailing of the Notice of Abandonment.

Applicant's petition is **GRANTED.**

The application will be forwarded to Publications Branch to be issued into a Patent in due course.

Should there be any questions with respect to this decision, please contact Sandra Morris; by mail addressed to: Director, Technology Center 3700/2900, P.O. Box 1450, Alexandria, VA 22313-1450; or by telephone at (571) 272-2622.

John Kittle
Director, Technology Center 3700/2900

UNITED STATES PATENT AND TRADEMARK OFFICE

Commissioner for Patents
United States Patent and Trademark Office
P.O. Box 1450
Alexandria, VA 22313-1450
www.uspto.gov

Orum & Roth LLC
53 W. Jackson Boulevard
Chicago IL 60604-3606

COPY MAILED

OCT 16 2006

OFFICE OF PETITIONS

In re Application of
WIDSTROM, et al.
Application No. 29/174,299
Filed: January 15, 2003
Attorney Docket No. 13367

DECISION ON PETITION
TO WITHDRAW
FROM RECORD

This is a decision on the Request to Withdraw as attorney or agent of record under 37 C.F.R. § 1.36(b), filed July 16, 2006.

The request is **APPROVED**.

A grantable request to withdraw as attorney/agent of record must be signed by every attorney/agent seeking to withdraw or contain a clear indication that one attorney is signing on behalf of another/others. A request to withdraw will not be approved unless at least 30 (thirty) days would remain between the date of approval and the later of the expiration date of a time to file a response or the expiration date of the maximum time period which can be extended under 37 C.F.R. § 1.136(a).

The request was signed by Catherine L. Gemrich.

Catherine L. Gemrich has been withdrawn as attorney or agent of record; all other attorneys remain of record.

The correspondence address of record remains unchanged.

Telephone inquiries concerning this decision should be directed to Patricia Volpe at 571-272-6825.

David Bucci
Petitions Examiner
Office of Petitions

UNITED STATES PATENT AND TRADEMARK OFFICE

Commissioner for Patents
United States Patent and Trademark Office
P.O. Box 1450
Alexandria, VA 22313-1450
www.uspto.gov

ORUM & ROTH
53 WEST JACKSON BLVD.
CHICAGO, IL 60604

COPY MAILED

SEP 0 5 2007

OFFICE OF PETITIONS

In re Application of :
Gustav Widstrom, et al. :
Application No. 29/174,299 : ON PETITION
Filed: January 15, 2003 :
Attorney Docket No. 13367 :

This is a decision on the petition under the unintentional provisions of 37 CFR 1.137(b), filed April 26, 2007, to revive the above-identified application.

The petition is **DISMISSED**.

The application became abandoned for failure to submit a proper reply to the Office action under Ex parte Quayle, 1935 Dec. Comm'r Pat. 11 (1935), mailed March 6, 2006, which set a shortened statutory period for reply of two (2) months. No extensions of time under the provisions of 37 CFR 1.136(a) were obtained. Accordingly, the application became abandoned on April 7, 2006.

A grantable petition under 37 CFR 1.137(b) must be accompanied by: (1) the required reply, unless previously filed; (2) the petition fee as set forth in 37 CFR 1.17(m); (3) a statement that the entire delay in filing the required reply from the due date for the reply until the filing of a grantable petition pursuant to 37 CFR 1.137(b) was unintentional; and (4) any terminal disclaimer (and fee as set forth in 37 CFR 1.20(d)) required by 37 CFR 1.137(d). Where there is a question as to whether either the abandonment or the delay in filing a petition under 37 CFR 1.137 was unintentional, the Director may require additional information. See MPEP 711.03(c)(II)(C) and (D). The instant petition lacks item(s) 1, 3 and 4.

With respect to item 1: the office acknowledges receipt of an amendment and 9 sheets of drawings, which were timely, filed on April 11, 2006[1]. However, the drawings fail to comply with the requirement of 37 CFR 1.84(d) which states:

Drawings: One or more application drawings shall be amended in the following manner: Any changes to an application drawing must be in compliance with § 1.84 and must be submitted on a replacement sheet of drawings which shall be an attachment to the amendment document and, in

[1] Amendment filed with a certificate of mailing dated April 6, 2006.

the top margin, labeled "Replacement Sheet". Any replacement sheet of drawings shall include all of the figures appearing on the immediate prior version of the sheet, even if only one figure is amended. Any new sheet of drawings containing an additional figure must be labeled in the top margin as "New Sheet". All changes to the drawings shall be explained, in detail, in either the drawing amendment or remarks section of the amendment paper.

(1) A marked-up copy of any amended drawing figure, including annotations indicating the changes made, may be included. The marked-up copy must be clearly labeled as "Annotated Sheet" and must be presented in the amendment or remarks section that explains the change to the drawings.

(2) A marked-up copy of any amended drawing figure, including annotations indicating the changes made, must be provided when required by the examiner.

With respect to item 3: The instant petition fails to contain the required statement of unintentional delay. 37 CFR 1.37(b) states that the entire delay in filing the required reply from the due date for the required reply until the filing of a grantable petition under 37 CFR 1.137(b) was unintentional. [NOTE: The United States Patent and Trademark Office may require additional information if there is a question as to whether either the abandonment or the delay in filing a petition under 37 CFR 1.137(b) was unintentional (MPEP 711.03(c), subsections (II)(C) and (D)).]

With respect to item 4: A terminal disclaimer and the $65 terminal disclaimer fee is required under 37 CFR 1.137(d) if the application is: (1) a design application, (2) a utility application filed before June 8, 1995, or (3) a plant application filed before June 8, 1995. The terminal disclaimer must dedicate to the public a terminal part of the term of any patent granted the application equivalent to the period of abandonment of the application, and must also apply to any patent granted on any application containing a specific reference under 35 U.S.C. 120, 121 or 365(c) to the application for which revival is sought.

Any request for reconsideration of this decision must be submitted within **TWO (2) MONTHS** from the mail date of this decision. Extensions of time under 37 CFR 1.136(a) are permitted. The reconsideration request should include a cover letter entitled "Renewed Petition under 37 CFR 1.137(b)." This is **not** a final agency action within the meaning of 5 U.S.C. § 704.

Further correspondence with respect to this matter should be addressed as follows:

By Mail: Mail Stop PETITION
Commissioner for Patents
P. O. Box 1450
Alexandria, VA 22313-1450

By hand: U. S. Patent and Trademark Office
Customer Service Window, Mail Stop Petitions
Randolph Building
401 Dulany Street
Alexandria, VA 22314

The centralized facsimile number is **(571) 273-8300.**

Telephone inquiries concerning this decision should be directed to the undersigned at (571) 272-1642.

April M. Wise
Petitions Examiner
Office of Petitions

UNITED STATES PATENT AND TRADEMARK OFFICE

Commissioner for Patents
United States Patent and Trademark Office
P.O. Box 1450
Alexandria, VA 22313-1450
www.uspto.gov

ORUM & ROTH
53 WEST JACKSON BLVD.
CHICAGO, IL 60604

COPY MAILED

DEC 18 2007

OFFICE OF PETITIONS

In re Application of
Gustav Widstrom, et al.
Application No. 29/174,299
Filed: January 15, 2003
Attorney Docket No. 13367

DECISION ON PETITION

This is a decision on the renewed petition under the unintentional provisions of 37 CFR 1.137(b), filed November 19, 2007, to revive the above-identified application and the petition to expedite under 237 CFR 1.182 filed November 29, 2007.

The petition is **GRANTED**.

The application became abandoned for failure to reply in a timely manner to the Office action under Ex parte Quayle, 1935 Dec. Comm'r Pat. 11 (1935), mailed April 11, 2006, which set a shortened statutory period for reply of two (2) months. No extensions of time under the provisions of 37 CFR 1.136(a) were obtained. Accordingly, the application became abandoned on June 12, 2006.

The petition satisfies the requirements of 37 CFR 1.137(b) in that petitioner has supplied (1) the reply in the form of an amendment with drawings, (2) the petition fee of $770, (3) a proper statement of unintentional delay; and (4) a terminal disclaimer and fee as required by 37 CFR 1.137(d).

The terminal disclaimer is accepted and has been made of record.

Telephone inquiries concerning this decision should be directed to undersigned at (571) 272-1642.

This application is being referred to Technology Center AU 2913 for appropriate action by the Examiner in the normal course of business on the reply received November 19, 2007.

April M. Wise
Petitions Examiner
Office of Petitions

UNITED STATES
PATENT AND
TRADEMARK OFFICE

UNDER SECRETARY OF COMMERCE FOR INTELLECTUAL PROPERTY AND
DIRECTOR OF THE UNITED STATES PATENT AND TRADEMARK OFFICE
WASHINGTON, D.C. 20231
WWW.USPTO.GOV

APR 24 2003

WOLF, BLOCK, SCHORR & SOLIS-COHEN LLP
1650 ARCH STREET, 22nd FLOOR
PHILADELPHIA, PA 19103-2097

In re Application of	:	DECISION ON
Mervin A. Dayan	:	PETITION TO MAKE SPECIAL
Serial No.: 29/174,362	:	
Filed: January 15, 2003	:	
For: Speaker Enclosure Having Dual Horizontal Bars	:	

This is in response to applicants' petition received April 15, 2003, to make the above-identified application special under the provisions of 37 CFR 1.102(d), based on infringement.

Applicant has satisfied the provisions set forth in M.P.E.P. 708.02, II. Therefore the petition is **GRANTED**.

The application will be forwarded to the examiner for action on the merits commensurate with this decision.

Should there be any questions with regard to this letter please contact John Kittle by letter addressed to the Director, Technology Center 3700/2900, Washington, DC 20231, or by telephone at (703) 308-0873 or by facsimile transmission at (703) 308-3139.

John E. Kittle
Director
Technology Center 3700/2900

UNITED STATES PATENT AND TRADEMARK OFFICE

Commissioner for Patents
United States Patent and Trademark Office
P.O. Box 1450
Alexandria, VA 22313-1450
www.uspto.gov

DRUMMOND & DUCKWORTH
EAST TOWER
SUITE 440
5000 BIRCH STREET
NEWPORT BEACH, CA 92660

COPY MAILED

OCT 26 2004

OFFICE OF PETITIONS

In re Application of	:	
Robert Stephen, et al.	:	
Application No. 29/174,394	:	ON PETITION
Filed: January 15, 2003	:	
Attorney Docket No. 746-P-5-USA	:	

This is a notice regarding your request for acceptance of a fee deficiency submission under 37 CFR 1.28. On September 1, 1998, the Court of Appeals for the Federal Circuit held that 37 CFR 1.28(c) is the sole provision governing the time for correction of the erroneous payment of the issue fee as a small entity. **See DH Technology v. Synergystex International, Inc. 154 F.3d 1333, 47 USPQ2d 1865 (Fed. Cir. Sept. 1, 1998).**

The Office no longer investigates or rejects original or reissue applications under 37 CFR 1.56. **1098 Off. Gaz. Pat. Office 502 (January 3, 1989)**. Therefore, nothing in this Notice is intended to imply that an investigation was done.

Your fee deficiency submission under 37 CFR 1.28 is hereby **ACCEPTED**.

Telephone inquiries concerning this decision should be directed to the undersigned at (571) 272-3229.

The application matter is being forwarded to Files Repository.

Retta Williams

Retta Williams
Petitions Examiner
Office of Petitions
Office of the Deputy Commissioner
for Patent Examination Policy

UNITED STATES PATENT AND TRADEMARK OFFICE

Commissioner for Patents
United States Patent and Trademark Office
P.O. Box 1450
Alexandria, VA 22313-1450
www.uspto.gov

DRUMMOND & DUCKWORTH
EAST TOWER, SUITE 440
5000 BIRCH STREET
NEWPORT BEACH, CA 92660

COPY MAILED

OCT 14 2004

OFFICE OF PETITIONS

In re Application of	:	
Stephen et al.	:	
Application No. 29/174,420	:	ON PETITION
Filed: January 17, 2003	:	
Attorney Docket No. 746-P-6-USA	:	

This is a notice regarding your request for acceptance of a fee deficiency submission under 37 CFR 1.28. On September 1, 1998, the Court of Appeals for the Federal Circuit held that 37 CFR 1.28(c) is the sole provision governing the time for correction of the erroneous payment of the issue fee as a small entity. **See DH Technology v. Synergystex International, Inc. 154 F.3d 1333, 47 USPQ2d 1865 (Fed. Cir. Sept. 1, 1998).**

The Office no longer investigates or rejects original or reissue applications under 37 CFR 1.56. **1098 Off. Gaz. Pat. Office 502 (January 3, 1989)**. Therefore, nothing in this Notice is intended to imply that an investigation was done.

Your fee deficiency submission under 37 CFR 1.28 is hereby **ACCEPTED**.

Inquiries related to this communication should be directed to the undersigned at (571) 272-3206.

Liana Chase
Petitions Examiner
Office of Petitions
Office of the Deputy Commissioner
for Patent Examination Policy

UNITED STATES PATENT AND TRADEMARK OFFICE

Commissioner for Patents
United States Patent and Trademark Office
P.O. Box 1450
Alexandria, VA 22313-1450
www.uspto.gov

BAKER BOTTS L.L.P.
30 ROCKEFELLER PLAZA
44TH FLOOR
NEW YORK, NY 10112-4498

COPY MAILED

SEP 29 2008

OFFICE OF PETITIONS

NOTICE

In re Patent No. D,510,190	:	
Issue Date: October 4, 2005	:	
Application No. 29/174,459	:	
Filed: January 17, 2003	:	
Attorney Docket No. A35251-B 072841.0184	:	

This is a notice regarding your request for acceptance of a fee deficiency submission under 37 CFR 1.28.

The Office no longer investigates or rejects original or reissue patent under 37 CFR 1.56. **1098 Off. Gaz. Pat. Office 502 (January 3, 1989)**. Therefore, nothing in this Notice is intended to imply that an investigation was done.

The petition is not signed by an attorney of record. Nevertheless, in accordance with 37 CFR 1.34, the signature of Mr. David W. Schalk appearing on the correspondence shall constitute a representation to the United States Patent and Trademark Office that he is authorized to represent the particular party on whose behalf he acts.

Your fee deficiency submission under 37 CFR 1.28 is hereby **ACCEPTED**.

This patent is no longer entitled to small entity status. Accordingly, all future fees paid in this patent must be paid at the large entity rate.

Inquiries related to this communication should be directed to the undersigned at (571) 272-6059.

Alicia Kelley
Petitions Examiner
Office of Petitions

UNITED STATES
PATENT AND
TRADEMARK OFFICE

UNDER SECRETARY OF COMMERCE FOR INTELLECTUAL PROPERTY AND
DIRECTOR OF THE UNITED STATES PATENT AND TRADEMARK OFFICE
WASHINGTON, D.C. 20231
WWW.USPTO.GOV

#4

Griggs & Johnston, LLP
17950 Preston Road,
Suite 1000
Dallas, TX 75252

In re Application of	:	
Robert S. Scheurer	:	
Serial No.: 29/174,477	:	**DECISION ON**
Filed: January 17, 2003	:	**PETITION TO MAKE SPECIAL**
For: Sport Sandal Insole	:	

This is in response to applicants' petition filed January 17, 2003, to make the above-identified application special under the provisions of 37 CFR 1.102(c), based on the age of the applicant.

Applicant has satisfied the provisions set forth in M.P.E.P. 708.02, IV. Therefore the petition is **GRANTED**.

The application will be forwarded to the examiner for action on the merits commensurate with this decision.

Should there be any questions with regard to this letter please contact John Kittle by letter addressed to the Director, Technology Center 3700/2900, Washington, DC 20231, or by telephone at (703) 308-0873 or by facsimile transmission at (703) 308-3139.

John E. Kittle
Director,
Technology Center 3700/2900

UNITED STATES PATENT AND TRADEMARK OFFICE

Commissioner for Patents
United States Patent and Trademark Office
P.O. Box 1450
Alexandria, VA 22313-1450
www.uspto.gov

MCKENNA LONG & ALDRIDGE LLP
SONG K JUNG
1900 K STREET N.W.
WASHINGTON, DC 20006

8/16/05

In re Application of
Toyonori Sasaki
Serial No.: 29/174,568
Filed: January 22, 2003
Attorney Docket No.: 7207.017.00

: PETITION DECISION

This is a decision on applicant's petition to revive patent application under 37 CFR 1.137(b), received June 29, 2005, to revive an unintentionally abandoned application.

This application became abandoned for failure to timely respond to the Office action mailed October 15, 2004. Applicant filed a Request for Continued Prosecution (RCE) with an Extension of time on April 15, 2005. However, applicant was advised that RCE's do not apply to design patent applications under 37 CFR 1.114 on April 25, 2005, along with a Notice of Abandonment. This petition followed.

Applicant's petition is **GRANTED**.

A grantable petition for a design application under 37 CFR 1.137(b), as revised December 1, 1997, requires four items: (1) a petition and petition fee; (2) a complete response if not earlier made; (3) a statement that the entire period of delay in prosecution was unintentional; and (4) a terminal disclaimer and disclaimer fee. The requirement for a terminal disclaimer has been waived, as the petition was filed before the mailing of the Notice of Abandonment.

The terminal disclaimer fee of $130.00 will be refunded to applicant's Deposit Account 50-0911, as directed.

The application will be forwarded for processing into a CPA in due course.

Should there be any questions with respect to this decision, please contact Sandra Morris; by mail addressed to: Director, Technology Center 1700/2900, P.O. Box 1450, Alexandria, VA 22313-1450; or by telephone at (571) 272-2622 or by facsimile transmission at (571) 273-2622.

Jacqueline M. Stone

Jacqueline Stone
Director, Technology Center 1700/2900

UNITED STATES PATENT AND TRADEMARK OFFICE

COMMISSIONER FOR PATENTS
UNITED STATES PATENT AND TRADEMARK OFFICE
P.O. BOX 1450
ALEXANDRIA, VA 22313-1450
www.uspto.gov

Paper No. 8

FISH & RICHARDSON P.C.
225 FRANKLIN STREET
BOSTON, MA 02110-2804

COPY MAILED

OCT 2 8 2003

OFFICE OF PETITIONS

In re Application of :
Winkler et al :
Application No. 29/174,715 :
Filed: January 23, 2003 :
Attorney Docket No. 02894-584001/72948 :

ON PETITION

This is a decision on the petition, filed August 19, 2003[1], and supplemented on October 23, 2003, under 37 CFR 1.313(c)(3) to withdraw the above-identified application from issue after payment of the issue fee.

The petition is **GRANTED**.

The above-identified application is withdrawn from issue in favor of a continued prosecution application (CPA) under 37 CFR 1.53(d).

Petitioner is advised that the issue fee paid on August 1, 2003 in the parent application is not refundable nor can it be applied towards any new Notice of Allowance which may issue on the CPA filed August 19, 2003.

Telephone inquiries should be directed to the undersigned at (703) 305-8859.

After receipt of the file in the Office of Petitions, the application will be forwarded to Technology Center 2911 for processing of the CPA.

Karen Creasy

Karen Creasy
Petitions Examiner
Office of Petitions
Office of the Deputy Commissioner
for Patent Examination Policy

---

[1]The papers filed August 19, 2003, has not been associated with the above-identified application file.

UNITED STATES PATENT AND TRADEMARK OFFICE

SEP 09 2004

Commissioner for Patents
United States Patent and Trademark Office
P.O. Box 1450
Alexandria, VA 22313-1450
www.uspto.gov

TOWNSEND AND TOWNSEND AND CREW, LLP
TWO EMBARCADERO CENTER
EIGHTH FLOOR
SAN FRANCISCO CA 94111-3834

In re Application of	:	
Kevin L. Corcoran et al	:	DECISION ON PETITION: TO WITHDRAW
Serial No. 29/174,777	:	FROM ISSUE UNDER 37 CFR1.313(a)
Filed: January 24, 2003	:	
For: Portable Punch with Grip Portion:		

This is a decision on the petition to withdraw the above identified patent application from issue under 37 CFR 1.313(a). The application is being withdrawn to permit consideration of an Information Disclosure Statement.

The petition is granted.

The issue fee is refundable upon written request. If, however, the application is again found allowable, the issue fee can be applied toward payment of the issue fee in the amount identified on the new Notice of Allowance and Issue Fee Due upon written request. This request and any balance due must be received on or before the due date noted in the new Notice of Allowance in order to prevent abandonment of the application.

Telephone inquiries should be directed to John E. Kittle at (703) 308-0873.

The above-identified application is being forwarded to the examiner for prompt appropriate action, including notifying applicant of the new status of this application.

John E. Kittle
Director
Technology Center 3700/2900

SPE RESPONSE FOR CERTIFICATE OF CORRECTION

Paper No.:063005

DATE : June 30, 2005

TO SPE OF : ART UNIT

SUBJECT : Request for Certificate of Correction on Patent No.: D495655

A response is requested with respect to the accompanying request for a certificate of correction.

Please complete this form and return with file, within **7** days to:
Certificates of Correction Branch - PK 3-910
Palm location **7590** - Tel. No. 305-8201

With respect to the change(s) requested, correcting Office and/or Applicant's errors, should the patent read as shown in the certificate of correction? No new matter should be introduced, nor should the scope or meaning of the claims be changed.

Thank You For Your Assistance **Certificates of Correction Branch**

The request for issuing the above-identified correction(s) is hereby:
Note your decision on the appropriate box.

☒ **Approved** **All** changes apply.

☐ **Approved in Part** Specify below which changes **do not** apply.

☐ **Denied** State the reasons for denial below.

Comments:

SPE: JOEL SINCAVAGE **Art Unit** 2913

SPE RESPONSE FOR CERTIFICATE OF CORRECTION

DATE : ~~2912~~ 6-29-07 **Paper No.:** _____

TO SPE OF : ART UNIT 2912

SUBJECT : Request for Certificate of Correction for Appl. No. D506980 29/174815

Please respond to this request for a certificate of correction within 7 days.

Please review the requested changes/corrections as shown in the **COCIN** document(s) in the IFW application image. No new matter should be introduced, nor should the scope or meaning of the claims be changed.

Please complete the response (see below) and forward the completed response to scanning using document code **COCX**.

Please reply A/S/A/P. Attorney wants to know the status

S Sparks

E M James
Certificates of Correction Branch
703-308-9390 ext. 116

Thank You For Your Assistance

The request for issuing the above-identified correction(s) is hereby:
Note your decision on the appropriate box.

- ☑ **Approved** — **All** changes apply.
- ☐ **Approved in Part** — Specify below which changes **do not** apply.
- ☐ **Denied** — State the reasons for denial below.

Comments: _____

STELLA M. REID
SUPERVISORY PATENT EXAMINER
SPE

2912
Art Unit

UNITED STATES PATENT AND TRADEMARK OFFICE

Commissioner for Patents
United States Patent and Trademark Office
P.O. Box 1450
Alexandria, VA 22313-1450
www.uspto.go

JOHNJ. LEAVITT
777 NORTH FIRST STREET
SUITE 420
SAN JOSE CA 95112-6339

In re Application of
Steve H Chen
Serial No.: 29/174,856
Filed: January 23, 2003
Attorney Docket No.: 4605

: PETITION DECISION

This is a decision on the Petition under 37 CFR 1.137(a), filed May 7, 2004, to revive the above identified abandoned application based on unavoidable circumstances.

A review of the file history shows that the examiner mailed a Notice of Allowance and Issue Fee Due to applicant January 30, 2004, setting a three-month shortened statutory period for payment of the Issue Fee. Upon failure to respond by April 30, 2004, the application was abandoned. This petition followed.

A petition under 37 CFR 1.137(a), as revised December 1, 1997, requires (1) a petition and petition fee of, (2) the proposed response or Issue Fee, (3) a terminal disclaimer and disclaimer fee of $55.00 in any design application, and (4) an adequate showing of the cause of unavoidable delay.

As this Petition was filed before the mailing of the Notice of Abandonment, the requirement for a Terminal Disclaimer has been waived. Applicant has documented that the Issue Fee was not paid timely, due to the ill health of the Attorney. The explanation as well as documented records shows that the attorney was unable to pay the Issue fee timely. Therefore, applicant has shown that the delay in submission of the Issue fee was unavoidable.

Applicant=s petition under 37 CFR 1.137(a) is **GRANTED**.

The Terminal Disclaimer fee of $55.00 will be refunded to applicant by Treasury Check in due course.

The application will be forwarded to Issue Branch to be processed as a patent in due course.

Should there be any questions with respect to this decision, please contact Sandra Morris; by mail addressed to: Director, Technology Center 1700/2900, P.O. Box 1450, Alexandria, VA 22313-1450; or by telephone at (571) 272-2622.

Sandra for
Jacqueline Stone
Director, Technology Center 1700/2900

UNITED STATES PATENT AND TRADEMARK OFFICE

Commissioner for Patents
United States Patent and Trademark Office
P.O. Box 1450
Alexandria, VA 22313-1450
www.uspto.go

JOHN J. LEAVITT
777 NORTH FIRST STREET
SUITE 420
SAN JOSE CA 95112-6339

In re Application of	
Steve H Chen	:
Serial No.: 29/174,857	:
Filed: January 23, 2003	: PETITION DECISION
Attorney Docket No.: 4604	:
	:

This is a decision on the Petition under 37 CFR 1.137(a), filed May 7, 2004, to revive the above identified abandoned application based on unavoidable circumstances. The extreme delay in acting upon this petition is regretted.

A review of the file history shows that the examiner mailed a Notice of Allowance and Issue Fee Due to applicant January 30, 2004, setting a three-month shortened statutory period for payment of the Issue Fee. Upon failure to respond by April 30, 2004, the application was abandoned. This petition followed.

A petition under 37 CFR 1.137(a), as revised December 1, 1997, requires (1) a petition and petition fee of, (2) the proposed response or Issue Fee, (3) a terminal disclaimer and disclaimer fee of $55.00 in any design application, and (4) an adequate showing of the cause of unavoidable delay.

As this Petition was filed before the mailing of the Notice of Abandonment, the requirement for a Terminal Disclaimer has been waived. Applicant has documented that the Issue Fee was not paid timely, due to the ill health of the Attorney. The explanation as well as documented records shows that the attorney was unable to pay the Issue fee timely. Therefore, applicant has shown that the delay in submission of the Issue fee was unavoidable.

Applicant=s petition under 37 CFR 1.137(a) is **GRANTED**.

The Terminal Disclaimer fee of $55.00 will be refunded to applicant by Treasury Check in due course.

The application will be forwarded to Issue Branch to be processed as a patent in due course.

Should there be any questions with respect to this decision, please contact Sandra Morris; by mail addressed to: Director, Technology Center 1700/2900, P.O. Box 1450, Alexandria, VA 22313-1450; or by telephone at (571) 272-2622.

Sandra for
Jacqueline Stone
Director, Technology Center 1700/2900

UNITED STATES PATENT AND TRADEMARK OFFICE

JAN 12 2005

COMMISSIONER FOR PATENTS
UNITED STATES PATENT AND TRADEMARK OFFICE
P.O. BOX 1450
ALEXANDRIA, VA 22313-1450
www.uspto.go

JOHNJ. LEAVITT
777 NORTH FIRST STREET
SUITE 420
SAN JOSE CA 95112-6339

In re Application of
Steve H Chen
Serial No.: 29/174,858
Filed: January 23, 2003
Attorney Docket No.: 4603

: PETITION DECISION

This is a decision on the Petition under 37 CFR 1.137(a), filed May 7, 2004, to revive the above identified abandoned application based on unavoidable circumstances.

A review of the file history shows that the examiner mailed a Notice of Allowance and Issue Fee Due to applicant January 30, 2004, setting a three-month shortened statutory period for payment of the Issue Fee. Upon failure to respond by April 30, 2004, the application was abandoned. This petition followed.

A petition under 37 CFR 1.137(a), as revised December 1, 1997, requires (1) a petition and petition fee of, (2) the proposed response or Issue Fee, (3) a terminal disclaimer and disclaimer fee of $55.00 in any design application, and (4) an adequate showing of the cause of unavoidable delay.

As this Petition was filed before the mailing of the Notice of Abandonment, the requirement for a Terminal Disclaimer has been waived. Applicant has documented that the Issue Fee was not paid timely, due to the ill health of the Attorney. The explanation as well as documented records shows that the attorney was unable to pay the Issue fee timely. Therefore, applicant has shown that the delay in submission of the Issue fee was unavoidable.

Applicant's petition under 37 CFR 1.137(a) is **GRANTED**.

The Terminal Disclaimer fee of $55.00 will be refunded to applicant by Treasury Check in due course.

The application will be forwarded to Issue Branch to be processed as a patent in due course.

Should there be any questions with respect to this decision, please contact Sandra Morris; by mail addressed to: Director, Technology Center 3700/2900, P.O. Box 1450, Alexandria, VA 22313-1450; or by telephone at (571) 272-2622.

John Kittle
Director, Technology Center 3700/2900

UNITED STATES PATENT AND TRADEMARK OFFICE

COMMISSIONER FOR PATENTS
UNITED STATES PATENT AND TRADEMARK OFFICE
P.O. BOX 1450
ALEXANDRIA, VA 22313-1450
www.uspto.go

JOHNJ. LEAVITT
777 NORTH FIRST STREET
SUITE 420
SAN JOSE CA 95112-6339

7/16/04

In re Application of
Steve H Chen
Serial No.: 29/174,858
Filed: January 23, 2003
Attorney Docket No.: 4603

: PETITION DECISION

This is a decision on the Petition under 37 CFR 1.137(a), filed May 7, 2004, to revive the above identified abandoned application based on unavoidable circumstances.

A review of the file history shows that the examiner mailed a Notice of Allowance and Issue Fee Due to applicant January 30, 2004, setting a three-month shortened statutory period for payment of the Issue Fee. Upon failure to respond by April 30, 2004, the application was abandoned. This petition followed.

A petition under 37 CFR 1.137(a), as revised December 1, 1997, requires (1) a petition and petition fee of, (2) the proposed response or Issue Fee, (3) a terminal disclaimer and disclaimer fee of $55.00 in any design application, and (4) an adequate showing of the cause of unavoidable delay.

As this Petition was filed before the mailing of the Notice of Abandonment, the requirement for a Terminal Disclaimer has been waived. Applicant has documented that the Issue Fee was not paid timely, due to the ill health of the Attorney. The explanation as well as documented records shows that the attorney was unable to pay the Issue fee timely. Therefore, applicant has shown that the delay in submission of the Issue fee was unavoidable.

Applicant's petition under 37 CFR 1.137(a) is **GRANTED**.

The Terminal Disclaimer fee of $55.00 will be refunded to applicant by Treasury Check in due course.

The application will be forwarded to Issue Branch to be processed as a patent in due course.

Should there be any questions with respect to this decision, please contact Sandra Morris; by mail addressed to: Director, Technology Center 1700/2900, P.O. Box 1450, Alexandria, VA 22313-1450; or by telephone at (571) 272-2622.

Jacqueline Stone
Director, Technology Center 1700/2900

UNITED STATES PATENT AND TRADEMARK OFFICE

COMMISSIONER FOR PATENTS
UNITED STATES PATENT AND TRADEMARK OFFICE
P.O. BOX 1450
ALEXANDRIA, VA 22313-1450
www.uspto.go

JUL 16 2004

JOHNJ. LEAVITT
777 NORTH FIRST STREET
SUITE 420
SAN JOSE CA 95112-6339

In re Application of
Steve H Chen
Serial No.: 29/174,856
Filed: January 23, 2003
Attorney Docket No.: 4605

: PETITION DECISION

This is a decision on the Petition under 37 CFR 1.137(a), filed May 7, 2004, to revive the above identified abandoned application based on unavoidable circumstances.

A review of the file history shows that the examiner mailed a Notice of Allowance and Issue Fee Due to applicant January 30, 2004, setting a three-month shortened statutory period for payment of the Issue Fee. Upon failure to respond by April 30, 2004, the application was abandoned. This petition followed.

A petition under 37 CFR 1.137(a), as revised December 1, 1997, requires (1) a petition and petition fee of, (2) the proposed response or Issue Fee, (3) a terminal disclaimer and disclaimer fee of $55.00 in any design application, and (4) an adequate showing of the cause of unavoidable delay.

As this Petition was filed before the mailing of the Notice of Abandonment, the requirement for a Terminal Disclaimer has been waived. Applicant has documented that the Issue Fee was not paid timely, due to the ill health of the Attorney. The explanation as well as documented records shows that the attorney was unable to pay the Issue fee timely. Therefore, applicant has shown that the delay in submission of the Issue fee was unavoidable.

Applicant's petition under 37 CFR 1.137(a) is **GRANTED**.

The Terminal Disclaimer fee of $55.00 will be refunded to applicant by Treasury Check in due course.

The application will be forwarded to Issue Branch to be processed as a patent in due course.

Should there be any questions with respect to this decision, please contact Sandra Morris; by mail addressed to: Director, Technology Center 3700/2900, P.O. Box 1450, Alexandria, VA 22313-1450; or by telephone at (571) 272-2622.

John Kittle
Director, Technology Center 3700/2900

UNITED STATES PATENT AND TRADEMARK OFFICE

COMMISSIONER FOR PATENTS
UNITED STATES PATENT AND TRADEMARK OFFICE
P.O. BOX 1450
ALEXANDRIA, VA 22313-1450
www.uspto.go

JUL 16 2004

JOHNJ. LEAVITT
777 NORTH FIRST STREET
SUITE 420
SAN JOSE CA 95112-6339

In re Application of
Steve H Chen
Serial No.: 29/174,857
Filed: January 23, 2003
Attorney Docket No.: 4604

: PETITION DECISION

This is a decision on the Petition under 37 CFR 1.137(a), filed May 7, 2004, to revive the above identified abandoned application based on unavoidable circumstances.

A review of the file history shows that the examiner mailed a Notice of Allowance and Issue Fee Due to applicant January 30, 2004, setting a three-month shortened statutory period for payment of the Issue Fee. Upon failure to respond by April 30, 2004, the application was abandoned. This petition followed.

A petition under 37 CFR 1.137(a), as revised December 1, 1997, requires (1) a petition and petition fee of, (2) the proposed response or Issue Fee, (3) a terminal disclaimer and disclaimer fee of $55.00 in any design application, and (4) an adequate showing of the cause of unavoidable delay.

As this Petition was filed before the mailing of the Notice of Abandonment, the requirement for a Terminal Disclaimer has been waived. Applicant has documented that the Issue Fee was not paid timely, due to the ill health of the Attorney. The explanation as well as documented records shows that the attorney was unable to pay the Issue fee timely. Therefore, applicant has shown that the delay in submission of the Issue fee was unavoidable.

Applicant's petition under 37 CFR 1.137(a) is **GRANTED**.

The Terminal Disclaimer fee of $55.00 will be refunded to applicant by Treasury Check in due course.

The application will be forwarded to Issue Branch to be processed as a patent in due course.

Should there be any questions with respect to this decision, please contact Sandra Morris; by mail addressed to: Director, Technology Center 3700/2900, P.O. Box 1450, Alexandria, VA 22313-1450; or by telephone at (571) 272-2622.

John Kittle
Director, Technology Center 3700/2900

UNITED STATES PATENT AND TRADEMARK OFFICE

JUL 16 2004

COMMISSIONER FOR PATENTS
UNITED STATES PATENT AND TRADEMARK OFFICE
P.O. BOX 1450
ALEXANDRIA, VA 22313-1450
www.uspto.go

JOHNJ. LEAVITT
777 NORTH FIRST STREET
SUITE 420
SAN JOSE CA 95112-6339

In re Application of
Steve H Chen
Serial No.: 29/174,858
Filed: January 23, 2003
Attorney Docket No.: 4603

: PETITION DECISION

This is a decision on the Petition under 37 CFR 1.137(a), filed May 7, 2004, to revive the above identified abandoned application based on unavoidable circumstances.

A review of the file history shows that the examiner mailed a Notice of Allowance and Issue Fee Due to applicant January 30, 2004, setting a three-month shortened statutory period for payment of the Issue Fee. Upon failure to respond by April 30, 2004, the application was abandoned. This petition followed.

A petition under 37 CFR 1.137(a), as revised December 1, 1997, requires (1) a petition and petition fee of, (2) the proposed response or Issue Fee, (3) a terminal disclaimer and disclaimer fee of $55.00 in any design application, and (4) an adequate showing of the cause of unavoidable delay.

As this Petition was filed before the mailing of the Notice of Abandonment, the requirement for a Terminal Disclaimer has been waived. Applicant has documented that the Issue Fee was not paid timely, due to the ill health of the Attorney. The explanation as well as documented records shows that the attorney was unable to pay the Issue fee timely. Therefore, applicant has shown that the delay in submission of the Issue fee was unavoidable.

Applicant's petition under 37 CFR 1.137(a) is **GRANTED**.

The Terminal Disclaimer fee of $55.00 will be refunded to applicant by Treasury Check in due course.

The application will be forwarded to Issue Branch to be processed as a patent in due course.

Should there be any questions with respect to this decision, please contact Sandra Morris; by mail addressed to: Director, Technology Center 3700/2900, P.O. Box 1450, Alexandria, VA 22313-1450; or by telephone at (571) 272-2622.

John Kittle
Director, Technology Center 3700/2900

UNITED STATES PATENT AND TRADEMARK OFFICE

JUL 16 2004

COMMISSIONER FOR PATENTS
UNITED STATES PATENT AND TRADEMARK OFFICE
P.O. BOX 1450
ALEXANDRIA, VA 22313-1450
www.uspto.go

JOHNJ. LEAVITT
777 NORTH FIRST STREET
SUITE 420
SAN JOSE CA 95112-6339

In re Application of
Steve H Chen
Serial No.: 29/174,859
Filed: January 23, 2003
Attorney Docket No.: 4602

: PETITION DECISION

This is a decision on the Petition under 37 CFR 1.137(a), filed May 7, 2004, to revive the above identified abandoned application based on unavoidable circumstances.

A review of the file history shows that the examiner mailed a Notice of Allowance and Issue Fee Due to applicant January 30, 2004, setting a three-month shortened statutory period for payment of the Issue Fee. Upon failure to respond by April 30, 2004, the application was abandoned. This petition followed.

A petition under 37 CFR 1.137(a), as revised December 1, 1997, requires (1) a petition and petition fee of, (2) the proposed response or Issue Fee, (3) a terminal disclaimer and disclaimer fee of $55.00 in any design application, and (4) an adequate showing of the cause of unavoidable delay.

As this Petition was filed before the mailing of the Notice of Abandonment, the requirement for a Terminal Disclaimer has been waived. Applicant has documented that the Issue Fee was not paid timely, due to the ill health of the Attorney. The explanation as well as documented records shows that the attorney was unable to pay the Issue fee timely. Therefore, applicant has shown that the delay in submission of the Issue fee was unavoidable.

Applicant's petition under 37 CFR 1.137(a) is **GRANTED**.

The Terminal Disclaimer fee of $55.00 will be refunded to applicant by Treasury Check in due course.

The application will be forwarded to Issue Branch to be processed as a patent in due course.

Should there be any questions with respect to this decision, please contact Sandra Morris; by mail addressed to: Director, Technology Center 3700/2900, P.O. Box 1450, Alexandria, VA 22313-1450; or by telephone at (571) 272-2622.

John Kittle
Director, Technology Center 3700/2900

UNITED STATES PATENT AND TRADEMARK OFFICE

JUL 16 2004

COMMISSIONER FOR PATENTS
UNITED STATES PATENT AND TRADEMARK OFFICE
P.O. BOX 1450
ALEXANDRIA, VA 22313-1450
www.uspto.go

JOHNJ. LEAVITT
777 NORTH FIRST STREET
SUITE 420
SAN JOSE CA 95112-6339

In re Application of
Steve H Chen
Serial No.: 29/174,859
Filed: January 23, 2003
Attorney Docket No.: 4602

: PETITION DECISION

This is a decision on the Petition under 37 CFR 1.137(a), filed May 7, 2004, to revive the above identified abandoned application based on unavoidable circumstances.

A review of the file history shows that the examiner mailed a Notice of Allowance and Issue Fee Due to applicant January 30, 2004, setting a three-month shortened statutory period for payment of the Issue Fee. Upon failure to respond by April 30, 2004, the application was abandoned. This petition followed.

A petition under 37 CFR 1.137(a), as revised December 1, 1997, requires (1) a petition and petition fee of, (2) the proposed response or Issue Fee, (3) a terminal disclaimer and disclaimer fee of $55.00 in any design application, and (4) an adequate showing of the cause of unavoidable delay.

As this Petition was filed before the mailing of the Notice of Abandonment, the requirement for a Terminal Disclaimer has been waived. Applicant has documented that the Issue Fee was not paid timely, due to the ill health of the Attorney. The explanation as well as documented records shows that the attorney was unable to pay the Issue fee timely. Therefore, applicant has shown that the delay in submission of the Issue fee was unavoidable.

Applicant's petition under 37 CFR 1.137(a) is **GRANTED**.

The Terminal Disclaimer fee of $55.00 will be refunded to applicant by Treasury Check in due course.

The application will be forwarded to Issue Branch to be processed as a patent in due course.

Should there be any questions with respect to this decision, please contact Sandra Morris; by mail addressed to: Director, Technology Center 3700/2900, P.O. Box 1450, Alexandria, VA 22313-1450; or by telephone at (571) 272-2622.

John Kittle
Director, Technology Center 3700/2900

UNITED STATES PATENT AND TRADEMARK OFFICE

COMMISSIONER FOR PATENTS
UNITED STATES PATENT AND TRADEMARK OFFICE
P.O. BOX 1450
ALEXANDRIA, VA 22313-1450
www.uspto.go

JOHNJ. LEAVITT
777 NORTH FIRST STREET
SUITE 420
SAN JOSE CA 95112-6339

FEB 25 2005

In re Application of
Steve H Chen
Serial No.: 29/174,860
Filed: January 23, 2003
Attorney Docket No.: 4601

: PETITION DECISION

This is a decision on the Petition under 37 CFR 1.137(a), filed May 7, 2004, to revive the above identified abandoned application based on unavoidable circumstances. The extreme delay in acting upon this petition is regretted.

A review of the file history shows that the examiner mailed a Notice of Allowance and Issue Fee Due to applicant January 30, 2004, setting a three-month shortened statutory period for payment of the Issue Fee. Upon failure to respond by April 30, 2004, the application was abandoned. This petition followed.

A petition under 37 CFR 1.137(a), as revised December 1, 1997, requires (1) a petition and petition fee of, (2) the proposed response or Issue Fee, (3) a terminal disclaimer and disclaimer fee of $55.00 in any design application, and (4) an adequate showing of the cause of unavoidable delay.

As this Petition was filed before the mailing of the Notice of Abandonment, the requirement for a Terminal Disclaimer has been waived. Applicant has documented that the Issue Fee was not paid timely, due to the ill health of the Attorney. The explanation as well as documented records shows that the attorney was unable to pay the Issue fee timely. Therefore, applicant has shown that the delay in submission of the Issue fee was unavoidable.

Applicant's petition under 37 CFR 1.137(a) is **GRANTED**.

The Terminal Disclaimer fee of $55.00 will be refunded to applicant by Treasury Check in due course.

The application will be forwarded to Issue Branch to be processed as a patent in due course.

Should there be any questions with respect to this decision, please contact Sandra Morris; by mail addressed to: Director, Technology Center 1700/2900, P.O. Box 1450, Alexandria, VA 22313-1450; or by telephone at (571) 272-2622.

Jacqueline Stone
Director, Technology Center 1700/2900

UNITED STATES PATENT AND TRADEMARK OFFICE

JAN 12 2005

COMMISSIONER FOR PATENTS
UNITED STATES PATENT AND TRADEMARK OFFICE
P.O. BOX 1450
ALEXANDRIA, VA 22313-1450
www.uspto.go

JOHNJ. LEAVITT
777 NORTH FIRST STREET
SUITE 420
SAN JOSE CA 95112-6339

In re Application of
Steve H Chen
Serial No.: 29/174,860
Filed: January 23, 2003
Attorney Docket No.: 4601

: PETITION DECISION

This is a decision on the Petition under 37 CFR 1.137(a), filed May 7, 2004, to revive the above identified abandoned application based on unavoidable circumstances. The extreme delay in acting upon this petition is regretted.

A review of the file history shows that the examiner mailed a Notice of Allowance and Issue Fee Due to applicant January 30, 2004, setting a three-month shortened statutory period for payment of the Issue Fee. Upon failure to respond by April 30, 2004, the application was abandoned. This petition followed.

A petition under 37 CFR 1.137(a), as revised December 1, 1997, requires (1) a petition and petition fee of, (2) the proposed response or Issue Fee, (3) a terminal disclaimer and disclaimer fee of $55.00 in any design application, and (4) an adequate showing of the cause of unavoidable delay.

As this Petition was filed before the mailing of the Notice of Abandonment, the requirement for a Terminal Disclaimer has been waived. Applicant has documented that the Issue Fee was not paid timely, due to the ill health of the Attorney. The explanation as well as documented records shows that the attorney was unable to pay the Issue fee timely. Therefore, applicant has shown that the delay in submission of the Issue fee was unavoidable.

Applicant's petition under 37 CFR 1.137(a) is **GRANTED**.

The Terminal Disclaimer fee of $55.00 will be refunded to applicant by Treasury Check in due course.

The application will be forwarded to Issue Branch to be processed as a patent in due course.

Should there be any questions with respect to this decision, please contact Sandra Morris; by mail addressed to: Director, Technology Center 3700/2900, P.O. Box 1450, Alexandria, VA 22313-1450; or by telephone at (571) 272-2622.

John Kittle

UNITED STATES PATENT AND TRADEMARK OFFICE

COMMISSIONER FOR PATENTS
UNITED STATES PATENT AND TRADEMARK OFFICE
P.O. BOX 1450
ALEXANDRIA, VA 22313-1450
www.uspto.go

JOHNJ. LEAVITT
777 NORTH FIRST STREET
SUITE 420
SAN JOSE CA 95112-6339

1/12/05

In re Application of
Steve H Chen
Serial No.: 29/174,861
Filed: January 23, 2003
Attorney Docket No.: 4600

: PETITION DECISION

This is a decision on the Petition under 37 CFR 1.137(a), filed May 7, 2004, to revive the above identified abandoned application based on unavoidable circumstances. The extreme delay in acting upon this petition is regretted.

A review of the file history shows that the examiner mailed a Notice of Allowance and Issue Fee Due to applicant January 30, 2004, setting a three-month shortened statutory period for payment of the Issue Fee. Upon failure to respond by April 30, 2004, the application was abandoned. This petition followed.

A petition under 37 CFR 1.137(a), as revised December 1, 1997, requires (1) a petition and petition fee of, (2) the proposed response or Issue Fee, (3) a terminal disclaimer and disclaimer fee of $55.00 in any design application, and (4) an adequate showing of the cause of unavoidable delay.

As this Petition was filed before the mailing of the Notice of Abandonment, the requirement for a Terminal Disclaimer has been waived. Applicant has documented that the Issue Fee was not paid timely, due to the ill health of the Attorney. The explanation as well as documented records shows that the attorney was unable to pay the Issue fee timely. Therefore, applicant has shown that the delay in submission of the Issue fee was unavoidable.

Applicant's petition under 37 CFR 1.137(a) is **GRANTED**.

The Terminal Disclaimer fee of $55.00 will be refunded to applicant by Treasury Check in due course.

The application will be forwarded to Issue Branch to be processed as a patent in due course.

Should there be any questions with respect to this decision, please contact Sandra Morris; by mail addressed to: Director, Technology Center 1700/2900, P.O. Box 1450, Alexandria, VA 22313-1450; or by telephone at (571) 272-2622.

Jacqueline Stone
Director, Technology Center 1700/2900

UNITED STATES PATENT AND TRADEMARK OFFICE

JAN 12 2005

COMMISSIONER FOR PATENTS
UNITED STATES PATENT AND TRADEMARK OFFICE
P.O. BOX 1450
ALEXANDRIA, VA 22313-1450
www.uspto.go

JOHNJ. LEAVITT
777 NORTH FIRST STREET
SUITE 420
SAN JOSE CA 95112-6339

In re Application of
Steve H Chen
Serial No.: 29/174,861
Filed: January 23, 2003
Attorney Docket No.: 4600

: PETITION DECISION

This is a decision on the Petition under 37 CFR 1.137(a), filed May 7, 2004, to revive the above identified abandoned application based on unavoidable circumstances. The extreme delay in acting upon this petition is regretted.

A review of the file history shows that the examiner mailed a Notice of Allowance and Issue Fee Due to applicant January 30, 2004, setting a three-month shortened statutory period for payment of the Issue Fee. Upon failure to respond by April 30, 2004, the application was abandoned. This petition followed.

A petition under 37 CFR 1.137(a), as revised December 1, 1997, requires (1) a petition and petition fee of, (2) the proposed response or Issue Fee, (3) a terminal disclaimer and disclaimer fee of $55.00 in any design application, and (4) an adequate showing of the cause of unavoidable delay.

As this Petition was filed before the mailing of the Notice of Abandonment, the requirement for a Terminal Disclaimer has been waived. Applicant has documented that the Issue Fee was not paid timely, due to the ill health of the Attorney. The explanation as well as documented records shows that the attorney was unable to pay the Issue fee timely. Therefore, applicant has shown that the delay in submission of the Issue fee was unavoidable.

Applicant's petition under 37 CFR 1.137(a) is **GRANTED**.

The Terminal Disclaimer fee of $55.00 will be refunded to applicant by Treasury Check in due course.

The application will be forwarded to Issue Branch to be processed as a patent in due course.

Should there be any questions with respect to this decision, please contact Sandra Morris; by mail addressed to: Director, Technology Center 3700/2900, P.O. Box 1450, Alexandria, VA 22313-1450; or by telephone at (571) 272-2622.

John Kittle
Director, Technology Center 3700/2900

UNITED STATES PATENT AND TRADEMARK OFFICE

DEC 06 2005

Commissioner for Patents
United States Patent and Trademark Office
P.O. Box 1450
Alexandria, VA 22313-1450
www.uspto.gov

MCCARTER & ENGLISH LLP
CITYPLACE 1
185 ASYLUM STREET
HARTFORD, CT 06103

In re Application of	:
Daniel Py	:
Serial No.: 29/174,939	: PETITION DECISION
Filed: January 27, 2003	:
Attorney Docket No.: 488180.0065	:

This is a decision on applicant's petition to revive patent application under 37 CFR 1.137(b), filed on October 4, 2004, to revive an unintentionally abandoned application.

This application became abandoned for failure to timely respond to the Notice of Allowance and Issue fee due mailed February 3, 2004. Applicant filed a Request for Continued Examination (RCE) on May 3, 2004; applicant was advised that this request was denied May 26, 2004, as RCE's do not apply to design patent applications. Therefore, as a proper response was not filed by May 3, 2004, the application was abandoned; this petition followed.

A grantable petition under 37 CFR 1.137(b), as revised December 1, 1997, requires four items: (1) a petition and petition fee; (2) a complete response if not earlier made; (3) a statement that the entire period of delay in prosecution was unintentional; and (4) a terminal disclaimer and disclaimer fee. The filing of a Continued Prosecution Application (CPA) is considered a proper response. Applicant is advised that as the petition was filed within two months the mailing of the Notice of Abandonment, the requirement for a terminal disclaimer was been waived.

Applicant's petition is **GRANTED**.

The $110.00 terminal disclaimer fee will be credited to applicant's Deposit Account 50-1402, as directed.

The application will be forwarded to Issue Branch to await applicant's response, as the application has already been issued by the Examiner on October 29, 2004.

Should there be any questions with respect to this decision, please contact Sandra Morris; by mail addressed to: Director, Technology Center 3700/2900, P.O. Box 1450, Alexandria, VA 22313-1450; or by telephone at (571) 272-2622.

John Kittle
Director, Technology Center 3700/2900

UNITED STATES PATENT AND TRADEMARK OFFICE

COMMISSIONER FOR PATENTS
UNITED STATES PATENT AND TRADEMARK OFFICE
WASHINGTON, D.C. 20231
www.uspto.gov

Paper No. 5

Cummings & Lockwood LLC
Granite Square
700 State Street
P.O. Box 1960
New Haven, CT 06509-1960

COPY MAILED
MAY 2 0 2003
OFFICE OF PETITIONS

In re Application of :
Py et al. . :
Application No. 29/175,061 : ON PETITION
Filed: January 28, 2003 :
Attorney Docket No. INSC-120.2 :

This is a decision on the petition filed April 15, 2003, to accord the above-identified application a filing date of January 28, 2003, instead of January 29, 2003.

The petition is **granted**.

37 CFR 1.10(c) states,

> Any person filing correspondence under this section that was received by the Office and delivered by the "Express Mail Post Office to Addressee" service of the USPS, who can show that there is a discrepancy between the filing date accorded by the Office to the correspondence and the date of deposit as shown by the "date-in" on the "Express Mail" mailing label or other official USPS notation, may petition the Commissioner to accord the correspondence a filing date as of the "date-in" on the "Express Mail" mailing label or other official USPS notation, provided that:
>
> (1) The petition is filed promptly after the person becomes aware that the Office has accorded, or will accord, a filing date other than the USPS deposit date;
> (2) The number of the "Express Mail" mailing label was placed on the paper(s) or fee(s) that constitute the correspondence prior to the original mailing by "Express Mail;" and
> (3) The petition includes a true copy of the "Express Mail" mailing label showing the "date-in," and of any other official notation by the USPS relied upon to show the date of deposit.

All of the above requirements have been met. Therefore, the application will be accorded a filing date of January 28, 2003.

The file is now being forwarded to the Office of Initial Patent Examination to accord the application a filing date of January 28, 2003.

Telephone inquiries should be directed to Petitions Attorney Steven Brantley at (703) 306-5683.

Charles Steven Brantley
Petitions Attorney
Office of Petitions

UNITED STATES PATENT AND TRADEMARK OFFICE

Commissioner for Patents
United States Patent and Trademark Office
P.O. Box 1450
Alexandria, VA 22313-1450
www.uspto.gov

Paper No.

ROBERT J. FERB, ESQ.
448 UNION AVE
MIDDLESEX NJ 08846-1927

COPY MAILED

JUL 26 2006

OFFICE OF PETITIONS

In re Application of	:	
Roger Lawrence	:	DECISION ON PETITION
Application No. 29/175,149	:	
Filed: January 30, 2003	:	
Attorney Docket No. 0083002	:	

This is a decision on the "PETITION TO WITHDRAW HOLDING OF ABANDONMENT BASED ON FAILURE TO RECEIVE OFFICE ACTION," filed May 2, 2006.

The petition under § 1.181 is **DISMISSED AS UNTIMELY FILED**.

Any request for reconsideration pursuant to § 1.181 must be filed within **TWO (2) MONTHS** of the date of this decision in order to be considered timely. See 37 CFR §1.181(f).

The above-identified application became abandoned for failure to file a response to the non-final Office action mailed October 17, 2003. This Office action set a three-month shortened statutory period for reply, with extensions of time obtainable under §1.136(a). No reply having been received, the above-identified application became abandoned on January 18, 2004. A courtesy Notice of Abandonment was mailed on December 14, 2004.

Petitioner asserts that the non-final Office action was never received and on this basis requests withdrawal of the holding of abandonment. However, the instant petition was not filed until May 2, 2006, 1 yr and 5 months after the mailing of the notice of abandonment.

The instant petition is filed pursuant to 37 CFR 1.181. Part (f) of this section provides, in pertinent part, that:

> Any petition under this part not filed within two months of the mailing date of the action or notice from which relief is requested may be dismissed as untimely, except as otherwise provided. This two-month period is not extendable.

As further stated in MPEP 711.03(C)IC:

> Therefore, any petition (under 37 CFR 1.181) to withdraw the holding of abandonment not filed within 2 months of the mail date of a notice of abandonment (the action complained of) may be dismissed as untimely. 37 CFR 1.181(f). Rather than dismiss an untimely petition to withdraw the holding of abandonment under 37 CFR 1.181(f), the Office may require a terminal disclaimer as a condition of granting an untimely petition to withdraw the holding of abandonment.

Further,

With respect to Design Applications, Utility Applications Filed Before June 8, 1995, and Plant Applications Filed Before June 8, 1995, if applicant receives a notice of abandonment, any petition to withdraw the holding of abandonment that is not filed within two months of the mail date of the notice of abandonment will not (absent extraordinary circumstances) be treated on its merits unless accompanied by a terminal disclaimer under 37 CFR 1.321(a), and the required fee set forth in 37 CFR 1.20(d). The period to be disclaimed is the terminal part of the term of any patent granted on the application, or of any patent granted on any utility or plant application that claims the benefit of the filing date of the application under 35 U.S.C. 120, 121, or 365(c), equivalent to the period between:

> (A) the date that is two months after the mail date of the notice of abandonment; and
>
> (B) the filing date of a grantable petition to withdraw the holding of abandonment.

The instant petition was not filed within two months of the mail date of the notice of abandonment. Petitioner does not set forth any basis for concluding that there was an extraordinary circumstance warranting excusing the untimeliness of this petition. Accordingly, it is concluded that the petition to withdraw the holding of abandonment will not be treated on the merits absent the filing of a terminal disclaimer.

Petitioner may request consideration of the petition under § 1.181 with the filing of a terminal disclaimer. Alternatively, applicant may submit a petition to revive pursuant to § 1.137(a) or § 1.137(b). Nevertheless, on petition to revive of a design application, a terminal disclaimer (and disclaimer fee) is required.

Further correspondence with respect to this decision should be addressed as follows:

By mail: Mail Stop Petition
Commissioner for Patents
P.O. Box 1450
Alexandria, VA 22313-1450

By fax: (571) 273-8300
ATTN: Office of Petitions

By hand: Customer Service Window
Randolph Building
401 Dulany Street
Alexandria, VA 22314

Telephone inquiries concerning this decision should be directed to the undersigned at (571) 272-3219.

Nancy Johnson
Senior Petitions Attorney
Office of Petitions

UNITED STATES PATENT AND TRADEMARK OFFICE

Commissioner for Patents
United States Patent and Trademark Office
P.O. Box 1450
Alexandria, VA 22313-1450
www.uspto.gov

Paper No. 9

HORST M. KASPER
13 FOREST DRIVE
WARREN NJ 07059

COPY MAILED

MAR 01 2007

OFFICE OF PETITIONS

In re Application of	:	
Roger Lawrence	:	DECISION ON PETITION
Application No. 29/175,149	:	
Filed: January 30, 2003	:	
Attorney Docket No. 0083002	:	

This is a decision on the "PETITION FOR REVIVAL OF APPLICATION FOR PATENT ABANDONED UNINTENTIONALLY UNDER 37 CFR 1.137(b) dated January 31, 2007" filed February 2, 2007.

The petition under § 1.137(b) is **DISMISSED**.

Any request for reconsideration of this decision must be submitted within TWO (2) MONTHS from the mail date of this decision. Extensions of time under 37 C.F.R. § 1.136(a) are permitted. The reconsideration request should include a cover letter entitled "Renewed Petition under 37 C.F.R. § 1.137(b)."

The above-identified application became abandoned effective January 18, 2004 for failure to file a response to the non-final Office action mailed October 17, 2003. A courtesy Notice of Abandonment was mailed on December 14, 2004. By decision mailed July 26, 2006, the "PETITION TO WITHDRAW HOLDING OF ABANDONMENT BASED ON FAILURE TO RECEIVE OFFICE ACTION" filed May 2, 2006 was dismissed as untimely filed without consideration on the merits. Petitioner was advised that absent a showing of extraordinary circumstance, filing of a terminal disclaimer (and fee) was required to have consideration of the petition.

On September 29, 2006, petitioner filed a renewed petition including a terminal disclaimer (and fee). By decision mailed January 9, 2007, the renewed petition was dismissed as it was determined that withdrawal of the holding of abandonment was not warranted given the circumstances of the abandonment.

Petitioner timely responded with the instant renewed petition based on unintentional delay.

The provisions of 37 C.F.R. § 1.137(b) provide that where the delay in reply was unintentional, a petition may be filed to revive an abandoned application or a lapsed patent. A petition filed pursuant to 37 C.F.R. §1.137(b) must be accompanied by:

(1) The reply required to the outstanding Office action or notice, unless previously filed;

(2) The petition fee as set forth in § 1.17(m);

(3) A statement that the entire delay in filing the required reply from the due date for the reply until the filing of a grantable petition pursuant to this paragraph was unintentional. The Director may require additional information where there is a question whether the delay was unintentional; and

(4) Any terminal disclaimer (and fee as set forth in § 1.20(d)) required pursuant to paragraph (d) of this section.

The petition includes payment of the petition fee and the required statement of unintentional delay. A terminal disclaimer was previously filed on September 29, 2006. Unfortunately, the petition must be dismissed because it does not include the reply required to the outstanding Office action.

In furtherance of satisfaction of this requirement, a copy of the October 17, 2003 Office action is enclosed.

Further correspondence with respect to this decision should be addressed as follows:

By mail: Mail Stop Petition
Commissioner for Patents
P.O. Box 1450
Alexandria, VA 22313-1450

By fax: (571) 273-8300
ATTN: Office of Petitions

By hand: Customer Service Window
Randolph Building
401 Dulany Street
Alexandria, VA 22314

Telephone inquiries concerning this decision should be directed to the undersigned at (571) 272-3219.

Nancy Johnson
Senior Petitions Attorney
Office of Petitions

Enclosure: Copy of October 17, 2003 Office action

UNITED STATES PATENT AND TRADEMARK OFFICE

Commissioner for Patents
United States Patent and Trademark Office
P.O. Box 1450
Alexandria, VA 22313-1450
www.uspto.gov

Paper No. 9

HORST M. KASPER
13 FOREST DRIVE
WARREN NJ 07059

COPY MAILED

JAN 09 2007

OFFICE OF PETITIONS

In re Application of	:	
Roger Lawrence	:	DECISION ON PETITION
Application No. 29/175,149	:	
Filed: January 30, 2003	:	
Attorney Docket No. 0083002	:	

This is a decision on the PETITIONER'S RESPONSE TO DECISION ON PETITION-REQUEST FOR RECONSIDERATION filed September 29, 2006.

The petition under § 1.181 is **DISMISSED**.

Any request for reconsideration pursuant to § 1.181 must be filed within **TWO (2) MONTHS** of the date of this decision in order to be considered timely. See 37 CFR §1.181(f).

Alternatively, applicant may submit a petition to revive pursuant to § 1.137(a) or § 1.137(b). (It is noted that abandonment due to non-receipt of an Office action based on failure to advise the Office of a change of correspondence address does not constitute unavoidable delay).

The above-identified application became abandoned effective January 18, 2004 for failure to file a response to the non-final Office action mailed October 17, 2003. A courtesy Notice of Abandonment was mailed on December 14, 2004. By decision mailed July 26, 2006, the "PETITION TO WITHDRAW HOLDING OF ABANDONMENT BASED ON FAILURE TO RECEIVE OFFICE ACTION" filed May 2, 2006 was dismissed as untimely filed without consideration on the merits. Petitioner was advised that absent a showing of extraordinary

circumstance, filing of a terminal disclaimer (and fee) was required to have consideration of the petition

On instant renewed petition, applicant filed the terminal disclaimer (and fee). Accordingly, consideration now turns to the merits of the petition. Petitioner asserts that the non-final Office action was never received and on this basis requests withdrawal of the holding of abandonment. In support thereof, petitioner submits a declaration of facts and a copy of the petitioner's docket record where the non-received Office action would have been entered had it been received.

Petitioner's evidence has been considered but not found persuasive. A review of the record reveals that the Office action was mailed to the correspondence address of record in effect on the day of mailing (i.e., 26 East Summit Street). Yet, it appears that the correspondence address for the attorney may have been changed without notification to the Office (i.e., 448 Union Avenue). The Office action was returned to the Office. As the Office action was mailed to the correct correspondence address and no change of correspondence address had been previously filed, the Technology Center technical support staff did not re-mail the Notice.

In view thereof, abandonment for failure to timely respond to the Office action mailed to the correspondence address of record was proper. Non-receipt of the Office action is properly attributed to the failure to file a change of correspondence address. Under such circumstances, withdrawal of the holding of abandonment is not warranted.

Receipt of the ASSOCIATE POWER OF ATTORNEY, including a change of correspondence address is acknowledged and made of record.

Further correspondence with respect to this decision should be addressed as follows:

By mail: Mail Stop Petition
Commissioner for Patents
P.O. Box 1450
Alexandria, VA 22313-1450

By fax: (571) 273-8300
ATTN: Office of Petitions

By hand: Customer Service Window
Randolph Building
401 Dulany Street
Alexandria, VA 22314

Telephone inquiries concerning this decision should be directed to the undersigned at (571) 272-3219.

Nancy Johnson
Senior Petitions Attorney
Office of Petitions

UNITED STATES PATENT AND TRADEMARK OFFICE

Commissioner for Patents
United States Patent and Trademark Office
P.O. Box 1450
Alexandria, VA 22313-1450
www.uspto.gov

Paper No. 14

HORST M. KASPER
13 FOREST DRIVE
WARREN NJ 07059

COPY MAILED

MAY 18 2007

OFFICE OF PETITIONS

In re Application of	:	
Roger Lawrence	:	DECISION ON PETITION
Application No. 29/175,149	:	
Filed: January 30, 2003	:	
Attorney Docket No. 0083002	:	

This is a decision on the RESPONSE TO A DECISION ON PETITION - REQUEST FOR RECONSIDERATION filed May 7, 2007, requesting reconsideration of the decision dismissing a petition to revive.

The petition under § 1.137(b) is **GRANTED**.

The above-identified application became abandoned effective January 18, 2004 for failure to file a response to the non-final Office action mailed October 17, 2003. A courtesy Notice of Abandonment was mailed on December 14, 2004.

By decision mailed July 26, 2006, the "PETITION TO WITHDRAW HOLDING OF ABANDONMENT BASED ON FAILURE TO RECEIVE OFFICE ACTION" filed May 2, 2006 was dismissed as untimely filed without consideration on the merits. Petitioner was advised that absent a showing of extraordinary circumstance, filing of a terminal disclaimer (and fee) was required to have consideration of the petition.

By decision mailed January 9, 2007, a renewed petition, including a terminal disclaimer (and fee), filed September 29, 2006 was dismissed as it was determined that withdrawal of the

holding of abandonment was not warranted given the circumstances of the abandonment.

By decision mailed March 1, 2007, a "PETITION FOR REVIVAL OF APPLICATION FOR PATENT ABANDONED UNINTENTIONALLY UNDER 37 CFR 1.137(b) dated January 31, 2007" filed February 2, 2007 was dismissed for failure to include the required reply.

On instant renewed petition filed May 7, 2007, applicants submitted the required reply, within the meaning of 37 CFR 1.137(b)(1). Petitioner has now met all requirements for revival of the application.

The application file is being forwarded to Technology Center AU 2914 for entry of the terminal disclaimer filed September 29, 2006 and for consideration by the examiner of the amendment submitted on petition filed May 7, 2007.

Telephone inquiries concerning this decision should be directed to the undersigned at (571) 272-3219.

Nancy Johnson

Nancy Johnson
Senior Petitions Attorney
Office of Petitions

UNITED STATES PATENT AND TRADEMARK OFFICE

COMMISSIONER FOR PATENTS
UNITED STATES PATENT AND TRADEMARK OFFICE
P.O. BOX 1450
ALEXANDRIA, VA 22313-1450
www.uspto.gov

ANDREWS & KURTH, L.L.P.
600 TRAVIS, SUITE 4200
HOUSTON TX, 77002

6/16/05

In re Application of
Sebastien Goulart
Serial No.: 29/175,187
Filed: January 31, 2003
Attorney Docket No.: LCA035/144569

: PETITION DECISION

This is in response to applicant's Petition to Withdraw Holding of Abandonment under 37 CFR 1.181, filed June 7, 2004, based on not having received the Office action.

This petition is **GRANTED.**

This application was held abandoned based on applicant's failure to respond to the Notice of Allowance mailed December 17, 2003. As no response was received by March 17, 2004, a Notice of Abandonment was mailed May 7, 2004. This petition followed.

Applicant has stated that a response could not have been filed, as the Notice of Allowance was never received. Applicant has submitted a statement from the paralegal, and a copy of the file jacket and docket records, all which show that the Notice was not received.

The application will be forwarded to the Examiner for prompt remailing of the Notice of Allowance in due course.

Should there be any questions with respect to this decision, please contact Sandra Morris; by mail addressed to: Director, Technology Center 1700/2900, P.O. Box 1450, Alexandria, VA 22313-1450; or by telephone at (571) 272-2622 or by facsimile transmission at (571) 273-2622.

Jacqueline Stone
Director, Technology Center 1700/2900

UNITED STATES PATENT AND TRADEMARK OFFICE

Commissioner for Patents
United States Patent and Trademark Office
P.O. Box 1450
Alexandria, VA 22313-1450
www.uspto.gov

COPY MAILED
MAR 21 2006
OFFICE OF PETITIONS

GARY L. BUSH
ANDREWS & KURTH, L.L.P.
600 TRAVIS, SUITE 4200
HOUSTON TX 77002

In re Application of	:	
GOULART	:	
Application No. 29/175,187	:	ON PETITION
Filed: January 31, 2003	:	
Attorney Docket No. 144569/LCA035	:	

This is a decision on the petition under 37 CFR 1.137(b), filed November 7, 2005, to revive the above-identified application.

The petition is **DISMISSED**.

Any request for reconsideration of this decision must be submitted within TWO (2) MONTHS from the mail date of this decision. Extensions of time under 37 CFR 1.136(a) are permitted. The reconsideration request should include a cover letter entitled "Renewed Petition under 37 CFR 1.137(b)." This is **not** a final agency action within the meaning of 5 U.S.C. § 704.

The application became abandoned for failure submit the issue fee in a timely manner in reply to the Corrected Notice of Allowance and Fee(s) Due, mailed July 11, 2005, which set a statutory period for reply of three (3) months. Accordingly, the application became abandoned on October 12, 2005.

A grantable petition under 37 CFR 1.137(b) must be accompanied by: (1) the required reply, unless previously filed; (2) the petition fee as set forth in 37 CFR 1.17(m); (3) a statement that the entire delay in filing the required reply from the due date for the reply until the filing of a grantable petition pursuant to 37 CFR 1.137(b) was unintentional; and (4) any terminal disclaimer (and fee as set forth in 37 CFR 1.20(d)) required by 37 CFR 1.137(d). Where there is a question as to whether either the abandonment or the delay in filing a petition under 37 CFR 1.137 was unintentional, the Commissioner may require additional information. See MPEP 711.03(c)(III)(C) and (D). The instant petition lacks above item (4).

Since the above-identified application is a design application, 37 CFR 1.137(d) requires a terminal disclaimer dedicating to the public a terminal part of the term of any patent granted on the application. The period to be disclaimed will be a terminal part of the patent to be granted equivalent to the period of abandonment. The period of abandonment will be computed to be the number of months from the date of abandonment to the date of filing a grantable petition. A terminal disclaimer fee of $130 ($65 if small entity) is required. If the terminal disclaimer is signed by an assignee, the assignee must comply with the requirements of 37 CFR 3.73(b).

Additionally, 37 CFR 1.137(b)(3) requires a statement that the entire delay in filing the required reply from the due date for the reply until the filing of a grantable petition pursuant to 37 CFR 1.137(b) was unintentional. The statement contained in the petition varies from the language required by 37 CFR 1.137(b)(3), and it is recommended that any renewed petition track the above language.

Further correspondence with respect to this matter should be addressed as follows:

By Mail: Mail Stop PETITION
Commissioner for Patents
P. O. Box 1450
Alexandria, VA 22313-1450

By hand: U. S. Patent and Trademark Office
Customer Service Window, Mail Stop Petitions
Randolph Building
401 Dulany Street
Alexandria, VA 22314

The centralized facsimile number is (571) 273-8300.

Telephone inquiries concerning this decision should be directed to the undersigned at (571) 272-4787.

Denise Pothier
Petitions Examiner
Office of Petitions

UNITED STATES PATENT AND TRADEMARK OFFICE

Commissioner for Patents
United States Patent and Trademark Office
P.O. Box 1450
Alexandria, VA 22313-1450
www.uspto.gov

COPY MAILED
JUN 0 5 2006
OFFICE OF PETITIONS

GARY BUSH
ANDREWS & KURTH, L.L.P.
600 TRAVIS, SUITE 4200
HOUSTON TX 77002

In re Application of	:	
GOULART	:	DECISION
Application No. 29/175,187	:	ON PETITION
Filed: January 31, 2003	:	
Attorney Docket No. 144569/LCA035	:	

This is a decision on a renewed petition under 37 CFR 1.137(b), filed April 20, 2006, to revive the above-identified application.

The petition is **GRANTED**.

The application became abandoned for failure submit the issue fee in a timely manner in reply to the Notice of Allowance and Fee(s) Due, mailed July 11, 2005, which set a statutory period for reply of three (3) months. Accordingly, the application became abandoned on October 12, 2005.

The petition satisfies the conditions for revival pursuant to the provisions of 37 CFR 1.137(b) in that (1) the reply in the form of the issue fee; (2) the petition fee of $1500; (3) the required statement of unintentional delay; and (4) the terminal disclaimer and its requisite fee as required by 37 CFR 1.137(d) have been received. Accordingly, the issue fee payment is accepted as having been unintentionally delayed.

Telephone inquiries concerning this decision should be directed to undersigned at (571) 272-4787.

The application matter is referred to the Office of Patent Publication.

Denise Pothier
Petitions Examiner
Office of Petitions

UNITED STATES PATENT AND TRADEMARK OFFICE

COMMISSIONER FOR PATENTS
UNITED STATES PATENT AND TRADEMARK OFFICE
P.O. BOX 1450
ALEXANDRIA, VA 22313-1450
www.uspto.gov

TRASK BRITT
P.O. BOX 2550
SALT LAKE CITY UT 84110

COPY MAILED

JUN 07 2004

OFFICE OF PETITIONS

In re Application of
Kalbach
Application No. 29/175,208
Filed: January 31, 2003
Attorney Docket No. 1197-5679US
For: EYEGLASS RETAINER

In re Application of
Kalbach
Application No. 29/186,378
Filed: July 23, 2003
Attorney Docket No. 1197-5679.1US
For: EYEGLASS RETAINER

DECISION GRANTING PETITION

This is a decision on petition under 37 CFR § 1.53(e) filed January 26, 2004 in application no. 29/186,378, requesting that the Notice of Incomplete Application, mailed November 24, 2003, be withdrawn and that the Continued Prosecution Application (CPA) under 37 CFR § 1.53(d) filed July 23, 2003 in application no. 29/175,208 be treated as such. The petition will be treated under 37 CFR 1.53(e).

The petition under 37 CFR 1.53(e) is **GRANTED**.

On June 13, 2003, a Notice of Allowance was mailed in application No. 29/175,208, which set a three (3) month shortened statutory period for reply. In response, authorization to charge the $165.00 design application CPA fee and a request for a CPA under 37 CFR § 1.53(d) based on prior application No. 29/175,208 were deposited on July 23, 2003.

On November 24, 2003 the Office mailed a Notice of Incomplete Application in new application no. 29/186,378 informing applicant that the application deposited on July 23, 2003 had not been accorded a filing date because it was missing a specification, at least one claim, and drawings. It was missing an oath/declaration, as well.

Petitioner filed the present petition on January 26, 2004. Petitioner argues that the request for CPA under 37 CFR 1.53(d), filed July 23, 2003 was proper and that the November 24, 2003 Notice was mailed in error.

The Office agrees with petitioner. The Notice was mailed in error because CPA practice **still applies** to design applications. *Elimination of Continued Prosecution Application Practice as to Utility and Plant Patent Applications* 68 FR 32376 (May 30, 2003). Accordingly, the July 23, 2003 CPA request was proper.

The Office should have utilized the file wrapper and the contents of the prior nonprovisional application, including the specification, drawings and oath or declaration, as the application papers for the CPA. No new application number should have been assigned. The November 24, 2003 Notice of Incomplete Application is hereby vacated.

The petition is granted.

Office financial records will be corrected to show that the $165.00 CPA filing fee paid on July 23, 2003 was paid in application No. 29/175,208, not in application No. 29/186,378. The $130.00 petition fee charged to deposit account no. 20-1469 will be credited to the same deposit account.

Application Nos. 29/175,208 and 29/186,378 will be forwarded to the Office of Initial Patent Examination.

Application No. 29/186,378 will be processed as a CPA under 37 CFR 1.53(d) of application no. 29/175,208. The CPA will have a filing date of July 23, 2003. Application No. 29/186,378 will be eliminated. All further correspondence concerning the application under should be directed to application No. 29/175,208, not application No. 29/186,378.

Telephone inquiries concerning this matter may be directed to the undersigned at (703) 308-6712.

E. Shirene Willis

E. Shirene Willis
Senior Petitions Attorney
Office of Petitions
Office of the Deputy Commissioner
for Patent Examination Policy

UNITED STATES PATENT AND TRADEMARK OFFICE

Commissioner for Patents
United States Patent and Trademark Office
P.O. Box 1450
Alexandria, VA 22313-1450
www.uspto.gov

Paper No. 7

TRASK BRITT
P.O. BOX 2550
SALT LAKE CITY UT 84110

COPY MAILED

JUN 07 2004

OFFICE OF PETITIONS

In re Application of
Kalbach
Application No. 29/175,208
Filed: January 31, 2003
Attorney Docket No. 1197-5679US
For: EYEGLASS RETAINER

In re Application of
Kalbach
Application No. 29/186,378
Filed: July 23, 2003
Attorney Docket No. 1197-5679.1US
For: EYEGLASS RETAINER

DECISION GRANTING PETITION

This is a decision on petition under 37 CFR § 1.53(e) filed January 26, 2004 in application no. 29/186,378, requesting that the Notice of Incomplete Application, mailed November 24, 2003, be withdrawn and that the Continued Prosecution Application (CPA) under 37 CFR § 1.53(d) filed July 23, 2003 in application no. 29/175,208 be treated as such. The petition will be treated under 37 CFR 1.53(e).

The petition under 37 CFR 1.53(e) is **GRANTED**.

On June 13, 2003, a Notice of Allowance was mailed in application No. 29/175,208, which set a three (3) month shortened statutory period for reply. In response, authorization to charge the $165.00 design application CPA fee and a request for a CPA under 37 CFR § 1.53(d) based on prior application No. 29/175,208 were deposited on July 23, 2003.

On November 24, 2003 the Office mailed a Notice of Incomplete Application in new application no. 29/186,378 informing applicant that the application deposited on July 23, 2003 had not been accorded a filing date because it was missing a specification, at least one claim, and drawings. It was missing an oath/declaration, as well.

Petitioner filed the present petition on January 26, 2004. Petitioner argues that the request for CPA under 37 CFR 1.53(d), filed July 23, 2003 was proper and that the November 24, 2003 Notice was mailed in error.

The Office agrees with petitioner. The Notice was mailed in error because CPA practice **still applies** to design applications. *Elimination of Continued Prosecution Application Practice as to*

Utility and Plant Patent Applications 68 FR 32376 (May 30, 2003). Accordingly, the July 23, 2003 CPA request was proper.

The Office should have utilized the file wrapper and the contents of the prior nonprovisional application, including the specification, drawings and oath or declaration, as the application papers for the CPA. No new application number should have been assigned. The November 24, 2003 Notice of Incomplete Application is hereby vacated.

The petition is granted.

Office financial records will be corrected to show that the $165.00 CPA filing fee paid on July 23, 2003 was paid in application No. 29/175,208, not in application No. 29/186,378. The $130.00 petition fee charged to deposit account no. 20-1469 will be credited to the same deposit account.

Application Nos. 29/175,208 and 29/186,378 will be forwarded to the Office of Initial Patent Examination.

Application No. 29/186,378 will be processed as a CPA under 37 CFR 1.53(d) of application no. 29/175,208. The CPA will have a filing date of July 23, 2003. Application No. 29/186,378 will be eliminated. All further correspondence concerning the application under should be directed to application No. 29/175,208, not application No. 29/186,378.

Telephone inquiries concerning this matter may be directed to the undersigned at (703) 308-6712.

E. Shirene Willis

E. Shirene Willis
Senior Petitions Attorney
Office of Petitions
Office of the Deputy Commissioner
for Patent Examination Policy

UNITED STATES PATENT AND TRADEMARK OFFICE

Commissioner for Patents
United States Patent and Trademark Office
P.O. Box 1450
Alexandria, VA 22313-1450
www.uspto.gov

Paper No.

TRASK BRITT
P.O. BOX 2550
SALT LAKE CITY, UT 84110

COPY MAILED
MAY 19 2006
OFFICE OF PETITIONS

In re Application of	:	
Edward Kalbach	:	DECISION ON
Application No. 29/175,208	:	PETITION
Filed: January 31, 2003	:	
Atty Docket No. 1197-5679US	:	

This is a decision on the petition filed May 5, 2006, pursuant to 37 C.F.R. § 1.137(b), to revive the above-identified application.

The petition is **DISMISSED**.

Any request for reconsideration of this decision must be submitted within **TWO (2) MONTHS** from the mail date of this decision. Extensions of time under 37 C.F.R. § 1.136(a) are permitted. The reconsideration request should include a cover letter entitled "Renewed Petition under 37 C.F.R. § 1.137(b)."

The above-identified application became abandoned for failure to timely pay the required issue fee within the statutory period of three months from the mailing date, September 7, 2005, of the Notice of Allowance. No extensions of time are permitted for submitting issue fees. A Notice of Abandonment was mailed on March 21, 2006[1].

[1] It is noted that a previous Notice of Abandonment was mailed on March 8, 2004 for failure to timely pay the Issue Fee in response to the Notice of Allowance mailed June 13, 2003. However, by decision on petition mailed June 7, 2004, it was recognized that applicant had timely responded with a continuing prosecution application (CPA) on July 23, 2003.

The provisions of 37 C.F.R. § 1.137(b) provide that where the delay in reply was unintentional, a petition may be filed to revive an abandoned application or a lapsed patent. A petition filed pursuant to 37 C.F.R. §1.137(b) must be accompanied by:

(1) The reply required to the outstanding Office action or notice, unless previously filed;

(2) The petition fee as set forth in § 1.17(m);

(3) A statement that the entire delay in filing the required reply from the due date for the reply until the filing of a grantable petition pursuant to this paragraph was unintentional. The Director may require additional information where there is a question whether the delay was unintentional; and

(4) Any terminal disclaimer (and fee as set forth in § 1.20(d)) required pursuant to paragraph (d) of this section.

The petition includes the required reply in the form of payment of the issue fee, payment of the petition fee, and the required statement of unintentional delay.

However, the instant petition does not satisfy requirement (4) above. No terminal disclaimer and fee were submitted with the instant petition. A properly completed terminal disclaimer and terminal disclaimer fee are required for revival of this design application. However, the terminal disclaimer is not properly completed.

Further correspondence with respect to this matter should be addressed as follows:

By mail: Mail Stop Petition
Commissioner for Patents
P.O. Box 1450
Alexandria, VA 22313-1450

By fax: (703) 872-9306
ATTN: Office of Petitions

By hand: Customer Service Window
Randolph Building
401 Dulany Street
Alexandria, VA 22314

Telephone inquiries specific to this matter should be directed to the undersigned at (571) 272-3219.

Nancy Johnson
Senior Petitions Attorney
Office of Petitions

UNITED STATES PATENT AND TRADEMARK OFFICE

Commissioner for Patents
United States Patent and Trademark Office
P.O. Box 1450
Alexandria, VA 22313-1450
www.uspto.gov

Paper No.

TRASK BRITT
P.O. BOX 2550
SALT LAKE CITY, UT 84110

COPY MAILED

NOV 02 2006

OFFICE OF PETITIONS

In re Application of	:	
Edward Kalbach	:	DECISION ON
Application No. 29/175,208	:	PETITION
Filed: January 31, 2003	:	
Atty Docket No. 1197-5679US	:	

This is a decision on the RENEWED PETITION UNDER 37 C.F.R. 1.137(b) filed July 19, 2006.

The petition is **GRANTED**.

The above-identified application became abandoned for failure to timely pay the required issue fee within the statutory period of three months from the mailing date, September 7, 2005, of the Notice of Allowance. By decision mailed May 19, 2006, the initial petition to revive was dismissed for failure to include the terminal disclaimer (and disclaimer fee) required to revive a design application.

On instant renewed petition, applicant filed the terminal disclaimer and fee. Petitioner has now met all requirements for reviving this application.

The Office of Patent Publication has been advised of this decision. The application is, thereby, forwarded to the Publishing Division for processing into a patent.

Telephone inquiries specific to this matter should be directed to the undersigned at (571) 272-3219.

Nancy Johnson
Senior Petitions Attorney
Office of Petitions

UNITED STATES PATENT AND TRADEMARK OFFICE

SEP 10 2004

Commissioner for Patents
United States Patent and Trademark Office
P.O. Box 1450
Alexandria, VA 22313-1450
www.uspto.gov

#6

SCOTT M. GARRETT
MOTOROLA, INC.
LAW DEPARTMENT
8000 WEST SUNRISE BOULEVARD
FORT LAUDERDALE, FL 33322

In re Application of	:
Sergio Luis Da Silva	:
Serial No.: 29/175,213	: PETITION DECISION
Filed: January 31, 2003	:
Attorney Docket No.: CE10548K	:

This is a decision on applicant's Petition under 37 CFR 1.137(b) submitted July 23 2004, to revive an unintentionally abandoned application.

This application became abandoned for failure to respond to the Office action mailed October 6, 2003, which set a three-month statutory period to respond. As no response was submitted by January 6, 2004, a Notice of Abandonment was mailed July 1, 2004. Applicant then filed this petition.

A grantable petition under 37 CFR 1.137(b), as revised December 1, 1997, requires four items: (1) a petition and petition fee; (2) a complete response if not earlier made; (3) a statement that the entire period of delay in prosecution was unintentional; and (4) a terminal disclaimer and disclaimer fee. The requirement for a terminal disclaimer has been waived, as the petition was submitted within one month of the mailing of the Notice of Abandonment.

Applicant's petition is **GRANTED.**

The application will be forwarded to the Examiner for evaluation of applicant's response in due course.

Should there be any questions with respect to this decision, please contact Sandra Morris; by mail addressed to: Director, Technology Center 3700/2900, P.O. Box 1450, Alexandria, VA 22313-1450; or by telephone at (571) 272-2622.

John Kittle
Director, Technology Center 3700/2900

UNITED STATES PATENT AND TRADEMARK OFFICE

COMMISSIONER FOR PATENTS
UNITED STATES PATENT AND TRADEMARK OFFICE
WASHINGTON, D.C. 20231
www.uspto.gov

COPY MAILED

JUN 1 8 2003

OFFICE OF PETITIONS

Paper No. 6

DART INDUSTRIES INC.
P O BOX 779001
ORLANDO, FL 32877-9001

In re Application of :
Jalet :
Application No. 29/175,308 : ON PETITION
Received: February 3, 2003 :
Attorney Docket No.: 130940-D200-B :

This is a decision on the petition, filed March 20, 2003 and supplemented May 22, 2003, under 37 CFR 1.182 to accord the above-identified application a filing date of March 20, 2003.

The application was received February 3, 2003. On February 25, 2003, the Office of Initial Patent Examination mailed the Notice of Omitted Items in a Nonprovisional Application ("Notice") notifying applicant that the application had been accorded a filing date but that Figures 17, 18, and 19 as described in the specification appeared to have been omitted from the application.

The Notice permits applicant to either: (**1**) promptly establish prior receipt in the PTO of the drawing(s) at issue (generally by way of a date-stamped postcard receipt (MPEP 503)), or (**2**) promptly submit the omitted drawings along with a supplemental oath or declaration covering the omitted drawings and accept the date of such submission as the application filing date.

An applicant asserting that the missing drawings were in fact deposited in the PTO with the application papers must file a petition (and the appropriate petition fee) with evidence of such deposit. An applicant desiring to submit the omitted drawings in a nonprovisional application and accept the date of such submission as the application filing date must file any omitted drawing(s) with an oath or declaration in compliance with 37 CFR 1.63 and 1.64 referring to such drawing(s) and a petition under 37 CFR 1.182 (with the petition fee under 37 CFR 1.17(h)) requesting the later filing date within two months of the date of the Notice (37 CFR 1.181(f)).

In response to the Notice, petitioner acknowledges that the application as deposited did in fact omit Figures 17, 18, and 19 and requests the application be accorded a filing date as of the date of submission of the omitted items. The original petition was accompanied by a drawing sheet identified as drawing sheet 6/7 featuring Figures 14, 15, and 16. On May 22, 2003, applicant submitted a drawing sheet identified as 7/7 featuring figures 17, 18, and 19.

The instant petition fails to comply with (**2**) set forth above. Petitioner has failed to submit a declaration in accordance with 37 CFR 1.63 and 37 CFR 1.64 covering the omitted items which were submitted May 22, 2003. Accordingly, the instant petition to accord the application a filing date of March 20, 2003 is hereby **DISMISSED**.

Any request for reconsideration of this decision must be submitted within **TWO (2) MONTHS** from mail date of this decision. Extensions of time under 37 CFR 1.136(a) are permitted. The reconsideration request should include a cover letter entitled "Renewed Petition under 37 CFR 1.182." This is not a final agency decision.

In the event that a timely renewed petition is not submitted, applicant will have constructively elected to maintain the filing date of February 3, 2003, the date of deposit of the application papers in the USPTO, using the original application papers which will include only those application papers present in the USPTO on the date of deposit. Should such an event occur, applicant will be required to amend the specification to delete all reference to the omitted items.

In the event that a grantable renewed petition is submitted, the filing date of the application will be the date of submission of the omitted items.

Further correspondence with respect to this matter should be addressed as follows:

By mail:	**Mail Stop Petition** Commissioner for Patents P.O. Box 1450 Alexandria, VA 22313-1450
By facsimile:	(703) 308-6916
By hand:	Office of Petitions 2201 South Clark Place Crystal Plaza 4, Suite 3C23 Arlington, VA 22202
By delivery service: (FedEx, UPS, DHL, etc.)	U.S. Patent and Trademark Office 2011 South Clark Place Customer Window, **Mail Stop Petition** Crystal Plaza Two, Lobby, Room 1B03 Arlington, VA 22202

Telephone inquiries related to this decision may be directed to Petitions Attorney Alesia M. Brown at (703) 305-0310.

Beverly M. Flanagan
Supervisory Petitions Examiner
Office of Petitions

UNITED STATES PATENT AND TRADEMARK OFFICE

COMMISSIONER OF PATENTS

January 29, 2004

Jeffrey Louis Viola
1738 Eaton St.
Berkley, MI 48072

In re Application of:
Jeffrey Louis Viola
Serial No.: 29/175,309 On Petition
Filing Date: February 3, 2003
For: REMOTE CONTROL HOLDER

In response to the fax petition received January 28, 2005, to withdraw the holding of abandonment for failure to respond to the Notice of Missing Parts in the above application.

The petition is Granted.

The above-identified application became abandoned for failure to reply with the meaning of 37 C.D.R 1.113 in a timely manner to the Notice to File Missing Parts of Non Provisional Application mailed February 26, 2003. Which set forth a shortened statutory period for reply of two months. Accordingly, the above-identified application became abandoned April 29, 2003.

The application will be processed with the documents and fee received on February 13, 2004.

The office regrets any inconvenience this may have caused the client.

Telephone inquiries concerning this application may be directed to Doshie E. Day (703) 308-3640.

Doshie Day

Doshie E. Day
Program Management Assistant
Office of Initial Patent Examination

UNITED STATES PATENT AND TRADEMARK OFFICE

COMMISSIONER OF PATENTS

January 29, 2004

Jeffrey Louis Viola
1738 Eaton St.
Berkley, MI 48072

In re Application of:
Jeffrey Louis Viola
Serial No.: 29/175,309 On Petition
Filing Date: February 3, 2003
For: REMOTE CONTROL HOLDER

In response to the fax petition received January 28, 2005, to withdraw the holding of abandonment for failure to respond to the Notice of Missing Parts in the above application.

The petition is Granted.

The above-identified application became abandoned for failure to reply with the meaning of 37 C.D.R 1.113 in a timely manner to the Notice to File Missing Parts of Non Provisional Application mailed February 26, 2003. Which set forth a shortened statutory period for reply of two months. Accordingly, the above-identified application became abandoned April 29, 2003.

The application will be processed with the documents and fee received on February 13, 2004.

The office regrets any inconvenience this may have caused the client.

Telephone inquiries concerning this application may be directed to Doshie E. Day (703) 308-3640.

Doshie E. Day
Program Management Assistant
Office of Initial Patent Examination

UNITED STATES PATENT AND TRADEMARK OFFICE

Commissioner for Patents
United States Patent and Trademark Office
P.O. Box 1450
Alexandria, VA 22313-1450
www.uspto.gov

Robert H. Earp, III
McDonald Hopkins Co., LPA
2100 Bank One Center
600 Superior Avenue, East
Cleveland, OH 44114-2653

COPY MAILED

OCT 19 2004

OFFICE OF PETITIONS

In re Application of :
Thomas Walter Rogers, et al. :
Application No. 29/175,330 :
Filed: February 3, 2003 :
Attorney Docket No. MDYNE/W027US :

ON PETITION

This is a decision on the petition filed October 12, 2004 under 37 CFR 1.313(c)(3) to withdraw the above-identified application from issue after payment of the issue fee. See 1233 *Official Gazette* 54 (April 11, 2000).

The petition is **GRANTED**.

Petitioner requests that the application be withdrawn from issue to permit abandonment for consideration of an Information Disclosure Statement in a continued prosecution application (CPA) under 37 CFR 1.53(d).

The application is withdrawn from issue.

Petitioner is advised that the issue fee paid on August 11, 2004, in the parent application is not refundable nor can it be applied towards any new Notice of Allowance which may issue on the CPA filed October 12, 2004.

Telephone inquiries should be directed to the undersigned at (571) 272-3204.

The application is being referred to Technology Center AU 2911 for processing of the CPA.

Sherry D. Brinkley
Petitions Examiner
Office of Petitions
Office of the Deputy Commissioner
for Patent Examination Policy

UNITED STATES PATENT AND TRADEMARK OFFICE

COMMISSIONER FOR PATENTS
UNITED STATES PATENT AND TRADEMARK OFFICE
P.O. BOX 1450
ALEXANDRIA, VA 22313-1450
www.uspto.gov

ROBERT J. HARTER
4233 CLIFFSIDE DRIVE
LA CROSSE WI 54601

COPY MAILED
APR 25 2006
OFFICE OF PETITIONS

In re Application of :
Schwab :
Application No. 29/175,393 : ON PETITION
Filed: February 3, 2003 :
Attorney Docket No. N/A :
For: SNAP DISC ELEMENT

This is a decision on the petition under 37 CFR 1.137(b), filed March 6, 2006 (certificate of mailing date March 2, 2006), to revive the above-identified application.

This application became abandoned for failure to timely submit corrected formal drawings within three (3) months of the mail date of the Notice of Allowability, mailed on September 20, 2005. Accordingly, this application became abandoned on December 21, 2005. A Notice of Abandonment was mailed on February 21, 2006.

Applicant has submitted a proper reply in the form of corrected formal drawings, an acceptable statement of the unintentional nature of the delay in responding to the September 20, 2005 Notice of Allowance and Fee(s) Due, a terminal disclaimer and required fee, and the petition fee.

The petition is **granted**. Please find enclosed a copy of the Notice of Draftsperson's Patent Drawing Review, approving the drawings submitted on March 6, 2006.

This application is being forwarded to Publishing Division for processing into a patent.

Telephone inquiries concerning this matter may be directed to the undersigned at (571) 272-3230.

E. Shirene Willis

E. Shirene Willis
Senior Petitions Attorney
Office of Petitions

Enclosure: Notice of Draftsperson's Patent Drawing Review

UNITED STATES PATENT AND TRADEMARK OFFICE

COMMISSIONER FOR PATENTS
UNITED STATES PATENT AND TRADEMARK OFFICE
P.O. BOX 1450
ALEXANDRIA, VA 22313-1450
www.uspto.gov

ROBERT J. HARTER
4233 CLIFFSIDE DRIVE
LA CROSSE WI 54601

COPY MAILED
APR 2 6 2006
OFFICE OF PETITIONS

~~COPY MAILED~~
~~APR 2 5 2006~~
~~OFFICE OF PETITIONS~~

In re Application of
Schwab
Application No. 29/175,393
Filed: February 3, 2003
Attorney Docket No. N/A
For: SNAP DISC ELEMENT

ON PETITION

This is a decision on the petition under 37 CFR 1.137(b), filed March 6, 2006 (certificate of mailing date March 2, 2006), to revive the above-identified application.

This application became abandoned for failure to timely submit corrected formal drawings within three (3) months of the mail date of the Notice of Allowability, mailed on September 20, 2005. Accordingly, this application became abandoned on December 21, 2005. A Notice of Abandonment was mailed on February 21, 2006.

Applicant has submitted a proper reply in the form of corrected formal drawings, an acceptable statement of the unintentional nature of the delay in responding to the September 20, 2005 Notice of Allowance and Fee(s) Due, a terminal disclaimer and required fee, and the petition fee.

The petition is **granted**. Please find enclosed a copy of the Notice of Draftsperson's Patent Drawing Review, approving the drawings submitted on March 6, 2006.

This application is being forwarded to Publishing Division for processing into a patent.

Telephone inquiries concerning this matter may be directed to the undersigned at (571) 272-3230.

E. Shirene Willis

E. Shirene Willis
Senior Petitions Attorney
Office of Petitions

Enclosure: Notice of Draftsperson's Patent Drawing Review

UNITED STATES PATENT AND TRADEMARK OFFICE

COMMISSIONER FOR PATENTS
UNITED STATES PATENT AND TRADEMARK OFFICE
P.O. BOX 1450
ALEXANDRIA, VA 22313-1450
www.uspto.gov

R. Blake Johnston, Esq.
Piper Rudnick
P. O. Box 64807
Chicago, IL 60664-0807

COPY MAILED
JAN 0 9 2006
OFFICE OF PETITIONS

In re Application of :
Samuel Lebowitz :
Application No. 29/175,479 : ON PETITION
Deposited: February 5, 2003 :
Title of Invention: :
TEA KETTLE :

This is a decision on the Petition to Revive the Application based upon unintentional abandonment, filed March 9, 2005[1]. The delay in treating this petition is regretted.

The petition is **granted**.

The above-identified application became abandoned for failure to timely and properly reply to the Notice of Allowance and Issue Fee Due ("Notice"), mailed December 31, 2003. The Notice set a non-extendable three (3) month period for reply. No reply having been received, the application became abandoned on April 1, 2004. A Notice of Abandonment was mailed May 7, 2004.

With the instant petition Applicant has submitted the issue fee.

This application is being referred to Publishing Division for processing into a patent.

Telephone inquiries concerning this matter should be directed to the undersigned at (571) 272-3232.

Derek L. Woods
Petitions Attorney
Office of Petitions

[1] The petition includes a Certificate of Mailing under 37 CFR 1.8 that certifies that the correspondence was filed June 11, 2004.

UNITED STATES PATENT AND TRADEMARK OFFICE

COMMISSIONER FOR PATENTS
UNITED STATES PATENT AND TRADEMARK OFFICE
WASHINGTON, D.C. 20231
www.uspto.gov

Paper No. 6

COPY MAILED

SEP 3 0 2003

OFFICE OF PETITIONS

PEACOCK MYERS AND ADAMS P C
P O BOX 26927
ALBUQUERQUE, NM 87125-6927

In re Application of
Amador
Application No. 29/175,496
Filing Date: March 18, 2003
Attorney Docket No.: 31557-1001

ON PETITION

This is a decision on the renewed petition, filed August 11, 2003, to accord the above-identified application a filing date of March 18, 2003.

The application was deposited on February 4, 2003. On March 10, 2003, a Notice of Incomplete Nonprovisional Application ("Notice") was mailed indicating that the application had not been accorded a filing date because the application was missing a specification including at least one claim and drawings in accordance with 35 U.S.C. 113 (first sentence). The Notice indicated that the filing date would be the date of receipt of all items required, including a newly executed oath or declaration covering the items. The Notice also indicated a properly signed oath or declaration in compliance with 37 CFR 1.63 identifying the application by application number and filing date was required. A petition was submitted March 18, 2003 and dismissed June 18, 2003.

In response to the decision on petition mailed June 18, 2003, petitioner requests that the filing date of the instant application be that of the date of submission of the omitted items. Petitioner submitted a copy of specification on March 18, 2003 and has herewith submitted an executed declaration.

In view of the above, the petition is GRANTED.

This application will be returned to the Office of Initial Patent Examination for further processing with a filing date of March 18, 2003, using the copy of the specification submitted on that date for examination purposes.

Telephone inquiries related to this decision may be directed to the undersigned at (703) 305-0310.

Alesia M. Brown
Senior Petitions Attorney
Office of Petitions

UNITED STATES PATENT AND TRADEMARK OFFICE

COMMISSIONER FOR PATENTS
UNITED STATES PATENT AND TRADEMARK OFFICE
P.O. BOX 1450
ALEXANDRIA, VA 22313-1450
www.uspto.gov

HELLER EHRMAN LLP
275 MIDDLEFIELD ROAD
MENLO PARK, CA 94025-3506

COPY MAILED

JAN 19 2006

OFFICE OF PETITIONS

In re Application of	:
Carson, et. Al	: DECISION ON PETITION
Application No. 29/175,523	:
Filed: February 5, 2003	:
Docket No.: 39238-0009	:

This is a decision on the petition to revive under 37 CFR 1.181, filed August 24, 2004.

The petition is hereby **GRANTED**.

This application was held abandoned February 21, 2004 for failure to timely submit a proper reply to the Office communication mailed January 20, 2004. Notice of Abandonment was mailed July 29, 2004.

Petitioner asserts non-receipt of the Office communication mailed January 20, 2004.

In the absence of any irregularity in the mailing of the Office communication, there is a strong presumption that the Office communication was properly mailed to practitioner at the address of record. This presumption may be overcome by a showing that the Office communication was not in fact received. The showing required to establish non-receipt of an Office communication must include a statement from the practitioner stating that the Office communication was not received by the practitioner and attesting to the fact that a search of the file jacket and docket records indicates that the Office communication was not received. A copy of the docket record where the non-received Office communication would have been entered had it been received and docketed must be attached to and referenced in practitioner's statement. *See*, MPEP 711.03(c). The showing outlined above may not be sufficient if there are circumstances that point to a conclusion that the Office communication may have been lost after receipt rather than a conclusion that the Office communication was lost in the mail.

In support of the petition, petitioners have provided a copy of the docket record where the Office communication would have been entered had it been received along with a statement from petitioners that a search of the docket record and file jacket indicated that the Office communication was not received.

In view of the evidence presented, the Notice of Abandonment is hereby **VACATED** and the holding of abandonment is **WITHDRAWN**.

The application file is being forwarded to the Technology Center's technical support staff for mailing of a new Office communication. The time period for response will be set to run from the date the new Office communication is mailed.

Telephone inquiries concerning this decision may be directed to the undersigned at (571) 272-3205. Inquiries related to the status of the application, including re-mailing of the Office communication must be directed to the Technology Center.

Alesia M. Brown
Petitions Attorney
Office of Petitions

UNITED STATES PATENT AND TRADEMARK OFFICE

Commissioner for Patents
United States Patent and Trademark Office
P.O. Box 1450
Alexandria, VA 22313-1450
www.uspto.gov

PAUL DAVIS
HELLER EHRMAN WHITE & McAULIFFE
275 MIDDLEFIELD ROAD
MENLO PARK, CA 94025

COPY MAILED

MAY 0 5 2006

OFFICE OF PETITIONS

In re Application of	:	
Craig Carson et al	:	
Application No. 29/175,523	:	DECISION ON PETITION
Filed: February 5, 2003	:	TO WITHDRAW
Attorney Docket No. 39238-0009	:	FROM RECORD
	:	

This is a decision on the Request to Withdraw as attorney or agent of record under 37 C.F.R. § 1.36(b), filed July 18, 2005.

The petition is **NOT APPROVED** as moot

A review of the file record indicates that the previously appointed power of attorney has been revoked by the assignee. Accordingly, the request to withdraw under 37 C.F.R. § 1.36(b) is moot.

All future communications from the Office will continue to be directed to the below-listed address until otherwise notified by applicants.

This application is being referred to Technology Center AU 2916.

Telephone inquires concerning this decision should be directed to Wan Laymon at 571-272-3220.

Dean Porter for
Amelia Au
Petitions Examiner
Office of Petitions

cc: WOOD HERRON & EVANS
2700 CAREW TOWER
441 VINE STREET
CINCINNATI, OH 45202

UNITED STATES PATENT AND TRADEMARK OFFICE

JUL 27 2004

Commissioner for Patents
United States Patent and Trademark Office
P.O. Box 1450
Alexandria, VA 22313-1450
www.uspto.gov

HELLER EHRMAN WHITE & MCAULIFFE LLP
275 MIDDLEFIELD ROAD
MENLO PARK, CA 94025-3506

In re Application of	:
Mitchell Levinson	:
Serial No.: 29/175,531	: PETITION DECISION
Filed: February 5, 2003	:
Attorney Docket No.: 39238-0007	:

This is a decision on applicants Petition for Withdrawal of Notice of Abandonment, which is being treated as a Petition under 37 CFR 1.181 submitted April 14, 2004, to revive an unavoidably abandoned application.

This application became abandoned for failure to respond to the Office action mailed August 1, 2003, which set a one-month shortened statutory period to respond. As no response was received by September 2, 2003, a Notice of Abandonment was mailed March 18, 2004. Applicant then filed this petition.

Applicant has submitted that the response and extension of time were timely filed on January 30, 2004, and has submitted copies of the response with a Post Card receipt and Express Mail certificate that show that the response was timely filed. While this response was never associated with the application, it is clear that applicant timely responded to the Office action, and the application was abandoned in error.

Applicant's petition is **GRANTED.**

As there are no fees associated with petitions granted under 37 CFR 1.181, the $130.00 fee will be credited to applicant's Deposit Account 08-1641, as directed.

The application will be promptly forwarded to the Examiner for evaluation of applicant's response in due course.

Should there be any questions with respect to this decision, please contact Sandra Morris; by mail addressed to: Director, Technology Center 3700/2900, P.O. Box 1450, Alexandria, VA 22313-1450; or by telephone at (571) 272-2622.

John Kittle
Director, Technology Center 3700/2900

DO NOT SCAN! **Please forward case and paper to address shown below.**

SPE RESPONSE FOR CERTIFICATE OF CORRECTION

Paper No.: _____

DATE : 9-14-06

TO SPE OF : ART UNIT 4700

SUBJECT : Request for Certificate of Correction for Appl. No.: 29/175655 Patent No.: D503343

Please respond to this request for a certificate of correction within 7 days.

Please review the requested changes/corrections as shown in the attached certificate of correction. Please complete this form (see below) and forward it with the file to:

Certificates of Correction Branch (CofC)
South Tower - 9A22
Palm Location 7580

RoChaun Johnson
Certificates of Correction Branch
703-308-9390 ext. 119

Thank You For Your Assistance

The request for issuing the above-identified correction(s) is hereby:
Note your decision on the appropriate box.

- [x] **Approved** — All changes apply.
- [ ] **Approved in Part** — Specify below which changes **do not** apply.
- [ ] **Denied** — State the reasons for denial below.

Comments: _____

Stella Reid
STELLA REID
SUPERVISORY DESIGN EXAMINER

_____ **SPE**

2912 **Art Unit**

PTOL-306 (REV. 7/03)

U.S. DEPARTMENT OF COMMERCE Patent and Trademark Office

UNITED STATES PATENT AND TRADEMARK OFFICE

COMMISSIONER FOR PATENTS
UNITED STATES PATENT AND TRADEMARK OFFICE
P.O. BOX 1450
ALEXANDRIA, VA 22313-1450
www.uspto.gov

KYLE M. GLOBERMAN
NELSON MULLINS RILEY & SCARBOROUGH, LLP
P.O. BOX 11070
COLUMBIA, SC 23211

COPY MAILED

SEP 1 2 2003

OFFICE OF PETITIONS

In re Application of	:	
Bruce Dexter, Barry Buchanan	:	
and Gary Cromer	:	DECISION GRANTING PETITION
Application No. 29/175,663	:	UNDER 37 CFR 1.47(a)
Filed: February 7, 2003	:	
Title: LASER ETCHED SOCKET		

This is in response to the "Petition Under 37 CFR 1.47(a)," filed August 27, 2003

The petition is **granted**.

Petitioner has shown that the non-signing inventor has refused to join in the filing of the above-identified application.

The above-identified application and papers have been reviewed and found in compliance with 37 CFR 1.47(a). This application is hereby accorded Rule 1.47(a) status. As provided in Rule 1.47(c), this Office will forward notice of this application's filing to the non-signing inventor at the address given in the Declaration. Notice of the filing of this application will also be published in the Official Gazette.

The $130.00 surcharge for late filing of the declaration has been charged to deposit account no. 50-1196

The file is being forwarded to the Office of Initial Patent Examination for further processing.

Telephone inquiries regarding this decision should be directed to the undersigned at (703) 306-9200.

Edward J. Tannouse
Senior Petitions Attorney
Office of Petitions
United States Patent and Trademark Office

UNITED STATES PATENT AND TRADEMARK OFFICE

COMMISSIONER FOR PATENTS
UNITED STATES PATENT AND TRADEMARK OFFICE
P.O. BOX 1450
ALEXANDRIA, VA 22313-1450
www.uspto.gov

GARY CROMER
236 NEWBURY CIRCLE
WESTMINSTER, SC 29693

COPY MAILED
SEP 12 2003
OFFICE OF PETITIONS

In re Application of
Bruce Dexter, Barry Buchanan and Gary Cromer
Application No. 29/175,663
Filed: February 7, 2003
Title: LASER ETCHED SOCKET

Dear GARY CROMER:

You are named as a joint inventor in the above identified United States patent application, filed under the provisions of 35 U.S.C. 116 (United States Code), and 37 CFR 1.47(a), Rules of Practice in Patent Cases. Should a patent be granted on the application you will be designated therein as a joint inventor.

As a named inventor you are entitled to inspect any paper in the file wrapper of the application, order copies of all or any part thereof (at a prepaid cost per 37 CFR 1.19) or make your position of record in the application. Alternatively, you may arrange to do any of the preceding through a registered patent attorney or agent presenting written authorization from you. If you care to join the application, counsel of record (see below) would presumably assist you. Joining in the application would entail the filing of an appropriate oath or declaration by you pursuant to 37 CFR 1.63.

Telephone inquiries regarding this communication should be directed to The undersigned at (703) 306-9200. Requests for information regarding your application should be directed to the File Information Unit at (703) 308-2733. Information regarding how to pay for and order a copy of the application, or a specific paper in the application, should be directed to Certification Division at (703) 308-9726 or 1(800) 972-6382 (outside the Washington D.C. area).

Edward J. Tannouse
Senior Petitions Attorney
Office of Petitions
United States Patent and Trademark Office

KYLE M. GLOBERMAN
NELSON MULLINS RILEY & SCARBOROUGH, LLP
P.O. BOX 11070
COLUMBIA, SC 23211

UNITED STATES PATENT AND TRADEMARK OFFICE

COMMISSIONER FOR PATENTS
UNITED STATES PATENT AND TRADEMARK OFFICE
P.O. BOX 1450
ALEXANDRIA, VA 22313-1450
www.uspto.gov

5/18/05

CRAIG M. STAINBROOK
JOHNSON & STAINBROOK, LLP
3558 ROUND BARN BLVDL, SUITE 203
SANTA ROSA, CA 95403

In re Application of
Joshua Numa Guyot
Serial No.: 29/175,670
Filed: March 25, 2003
Attorney Docket No.: 00833.P2

: PETITION DECISION

This is in response to applicant's Petition for Withdrawal Holding of Abandonment under 37 CFR 1.181, filed November 3, 2004, based on not having received the Office action. The delay in acting upon this petition is regretted.

A review of the file history shows that a Notice of Allowance was mailed February 12, 2004, setting a three month statutory period to pay the Issue fee and submit formal drawings. The Issue fee was received May 12, 2004; however, as no formal drawings were received, the application was abandoned.

Applicant has stated that formal drawings were not submitted, as the Notice of Allowance and Issue Fee Due were mailed to the wrong address. A Revocation of Power of Attorney was mailed October 2, 2003 and received by the Office on October 6, 2003, as evidenced by the return receipt post card. However, the Office did not enter this paper into the file, and the Notice of Allowance was mailed to the incorrect address. The previous attorney kindly submitted the Issue fee, but did not submit formal drawings. However, the Office erred in not mailing the Notice to the correct address, and the case will be returned to pending status. The drawings received November 12, 2004 are acceptable.

Applicant's petition is **GRANTED.**

The application will be promptly forwarded to Publications to be printed as a patent in due course.

Should there be any questions with respect to this decision, please contact Sandra Morris; by mail addressed to: Director, Technology Center 1700/2900, P.O. Box 1450, Alexandria, VA 22313-1450; or by telephone at (571) 272-2622.

JStone

Jacqueline Stone
Director, Technology Center 1700/2900

UNITED STATES PATENT AND TRADEMARK OFFICE

Commissioner for Patents
United States Patent and Trademark Office
P.O. Box 1450
Alexandria, VA 22313-1450
www.uspto.gov

Chris Wyatt
RD1 Box 302A
Ocean View DE 19970

SEP 2 9 2005

In re Application of
Chris Wyatt
Serial No.: 29/175,717
Filed: February 10, 2003
Attorney Docket No.:

: PETITION DECISION

This is a decision on applicant's renewed Petition, which is being treated as a Petition to Revive under 37 CFR 1.181 received July 15, 2005, due to non-response of office action.

A review of the file history shows that the Examiner mailed an Office Action to applicant on November 19, 2003, setting a three-month shortened statutory period for response. This rejection was for application 29/175,717.A reply was received November 2, 2004, which was well after the period for response. Therefore, a Notice of Abandonment was mailed to applicant on January 26, 2005. A Petition was submitted January 31, 2005, which was dismissed due to lack of evidence; this petition followed.

Applicant has submitted copies of the response with a Certified Mail Receipt of January 29, 2004. A Certificate of Mailing dated January 29, 2004 was also matched with the application. Therefore, as the response was timely filed, the case will be returned to pending status.

Applicant's petition is **GRANTED.**

The application will be forwarded to the Examiner for evaluation of applicant's response in due course.

Should there be any questions with respect to this decision, please contact Sandra Morris; by mail addressed to: Director, Technology Center 1700/2900, P.O. Box 1450, Alexandria, VA 22313-1450; or by telephone at (571) 272-2622.

Jacqueline M. Stone

Jacqueline Stone
Director, Technology Center 1700/2900

UNITED STATES PATENT AND TRADEMARK OFFICE

COMMISSIONER FOR PATENTS
UNITED STATES PATENT AND TRADEMARK OFFICE
P.O. BOX 1450
ALEXANDRIA, VA 22313-1450
www.uspto.gov

Paper No. 4

Chris Wyatt
RD 1 Box 302A
Ocean View DE 19970

COPY MAILED

DEC 2 2 2003

OFFICE OF PETITIONS

In re Application of
Chris Roger Wyatt
Application No. 29/177,553
Filed: March 12, 2003
Title of Invention: LOUVERED HANDRAIL/PRIVACY SCREEN KIT

In re Application of
Chris Roger Wyatt
Application No. 29/175,717
Filed: February 10, 2003
Title of Invention: LOUVERED HANDRAIL/PRIVACY SCREEN KIT

:ON PETITION

This is a response to the petition, under 37 CFR 1.182, filed December 18, 2003, by facsimile transmission, in Application No. 29/177,553, to merge that file with the file in Application No. 29/175,717 and that the filing fee in Application No. 29/177,553 be refunded.

The petition is **granted**.

The original application papers deposited on February 10, 2003, have been used to process Application No. 29/175,717, herein referred to as the "717" application, with a filing date of February 10, 2003. Applicant, pro se inventor, had not received a filing receipt and therein was unsure as to whether the first application had been accepted and on March 12, 2003, submitted a second packet of application materials including filing fees for a new application. The March 12, 2003 application materials however included additional drawings not previously submitted with the first application filed February 10, 2003. The application papers received on March 12, 2003 has been assigned Application No. 29/177,553, herein referred to as the "553" application.

On November 12, 2003, a non-Final Office Action was mailed in the "717" application with a shortened statutory period of three (3) months within which to file a reply. On the same date, November 12, 2003, an office action pursuant to *Ex parte Qualye*, 1935 C.D. 11, 453, O.G. 213 was mailed in the "553" application with a shortened statutory period of two (2) months within which to file a reply.

A review of the application papers received on March 12, 2003 and assigned Application No.29/177,553 reveals that the cover sheet identified the "717" application and indicated the filing was intended as a "second attempt" and since the drawings were improved upon, one would guess by "second attempt" that the applicant intended the filing to be a supplement to the "717" application filed February 10, 2003.

As such, the showing of record is that the application papers filed on March 12, 2003, were processed as a new application due to Office error. Accordingly, the papers present in the file of Application No. 29/177,553 will be merged into the file of Application No. 29/175,717.

It should be noted that as further evidence of the applicant's intent to only file and prosecute one application, on three separate occasions, April 8, 2003, July 24, 2003, and July 31, 2003, the applicant sent in additional/supplemental drawings and always referenced the "717" application. In each of those instances, the filings were matched with the "717" application, a separate application file was not created and neither were the filings diverted to the "553" or any other application.

The filing fee ($165.00) paid on March 12, 2003 in Application No. 29/177,553 will be applied to the fee for the petition under 37 CFR 1.182 ($130.00) and the balance ($35) will be refunded to petitioner.

The applications will be returned to the Office of Initial Patent Examination for merging the file of application No. 29/177,553 into the file of application No. 29.175,717. Application No. 29/177,553 will no longer be an active serial number. All future correspondence concerning this application should be directed to application No. 29/175,717. After the files are merged, Application No. 29/177,553 will be processed as an abandoned application and Application No. 29/175,717 should be forwarded to Technology Center 2914 for further examination.

Telephone inquiries specific to this matter should be directed to the undersigned petitions attorney at (703) 305-4497.

Patricia Faison-Ball

Patricia Faison-Ball
Senior Petitions Attorney
Office of Petitions

UNITED STATES PATENT AND TRADEMARK OFFICE

COMMISSIONER FOR PATENTS
UNITED STATES PATENT AND TRADEMARK OFFICE
P.O. BOX 1450
ALEXANDRIA, VA 22313-1450
www.uspto.gov

Chris Wyatt
RD1 Box 302A
Ocean View DE 19970

6/27/05

In re Application of
Chris Wyatt
Serial No.: 29/175,717
Filed: February 10, 2003
Attorney Docket No.:

: PETITION DECISION

This is in response to applicants letter regarding the abandonment of the application received January 31, 2005, which is being treated as a Petition filed under 37 CFR 1.181.

A review of the file history shows that the Examiner mailed an Office Action to applicant on November 19, 2003, setting a three-month shortened statutory period for response. This rejection was for application 29/175,717.A reply was received November 2, 2004, which was well after the period for response. Therefore, a Notice of Abandonment was mailed to applicant on January 26, 2005.

If applicant can prove that the response was timely filed, then a renewed petition under 37 CFR 1.181 may be submitted. However, if such proof cannot be provided, a petition under 37 CFR 1.137(b) should instead be provided if applicant wishes to revive the current application.

A grantable petition under 37 CFR 1.137(b), as revised December 1, 1997, requires four items: (1) a petition and petition fee of $750.00; (2) a complete response if not earlier made; (3) a statement that the entire period of delay in prosecution was unintentional; and (4) a terminal disclaimer and disclaimer fee of $65.00. A copy of a petition has been enclosed for applicant's use.

Should there be any questions with respect to this decision, please contact Sandra Morris; by mail addressed to: Director, Technology Center 1700/2900, P.O. Box 1450, Alexandria, VA 22313-1450; or by telephone at (571) 272-2622.

Jacqueline Stone
Director, Technology Center 1700/2900

Approved
Jacqueline M. Stone
Jacqueline M. Stone, Director
Technology Center 1700

UNITED STATES PATENT AND TRADEMARK OFFICE

Commissioner for Patents
United States Patent and Trademark Office
Washington, D.C. 20231
www.uspto.gov

Paper No. 4
COPY MAILED
MAY 06 2003
OFFICE OF PETITIONS

BROWN, MARTIN, HALLER & MCCLAIN LLP
1660 UNION STREET
SAN DIEGO, CA 92101-2926

In re Application of
Hein et al.
Application No. 29/175,762
Filed: February 7, 2003
Attorney Docket No. 4220-DP05

DECISION ON PETITION

This is a decision on the Petition Under 37 CFR 1.182, filed March 25, 2003, requesting the application be accorded a filing date of February 7, 2002, including drawing Figure 4 as part of the original disclosure.

Application papers in the above-identified application were filed on February 7, 2003. On March 3, 2003, the Office of Initial Patent Examination mailed a Notice of Omitted Item(s) in a Nonprovisional Application, indicating February 7, 2003, as the filing date, but noting that Figure 4 described in the specification appeared to have been omitted from the application.

In response, Petitioner filed the instant petition wherein Petitioner avers that Figure 4 was in fact deposited with the application on February 7, 2003, but that the label for Figure 4 was inadvertently left off of the drawing. The petition is accompanied by a copy of the sheet of drawings in question showing the correct figure label.

It is obvious from the petition that no drawing was actually missing on February 7, 2003. Rather, the drawing of Fig. 4 was simply not labeled as a result of Petitioner's filing error. However, the "Notice Of Omitted Item(s)" mailed March 3, 2003, was correct in stating that Figure 4 described in the specification appeared to have been omitted. Therefore, the "Notice" was properly mailed and will not be withdrawn.

The petition is dismissed.

Since the present petition was not necessitated by any error on the part of the Office, the $130.00 petition fee will not be refunded.

A preliminary amendment adding the label "Fig. 4" to the mislabeled drawing figure should be filed prior to first action on the merits.

The application is being returned to the Office of Initial Patent Examination for further processing with a filing date of February 7, 2003, using the 3 sheets of drawings filed on that date.

Telephone inquiries specific to this decision should be directed to Petitions Attorney Derek L. Woods at (703) 305-0014.

Beverly M. Flanagan
Supervisory Petitions Examiner
Office of Petitions

Derek L. Woods
Petitions Attorney
Office of Petitions

UNITED STATES PATENT AND TRADEMARK OFFICE

JAN 12 2005

COMMISSIONER FOR PATENTS
UNITED STATES PATENT AND TRADEMARK OFFICE
P.O. BOX 1450
ALEXANDRIA, VA 22313-1450
www.uspto.gov

J. BENNETT MULLINAX, LLC
3447 PELHAM RD, SUITE 206
P.O. BOX 26029
GREENVILLE, SC 29616-1029

In re Application of
Sung Woo Lee
Serial No.: 29/175,807
Filed: February 11, 2003
Attorney Docket No.: FNT-8-D

: PETITION DECISION

This is a decision on applicant's Petition under 37 CFR 1.137(b) submitted September 10, 2004, to revive an unintentionally abandoned application. The delay in acting upon this petition is regretted.

This application became abandoned for failure to fully respond to the Notice of Allowance mailed April 22, 2004, which set a three-month statutory period to pay the Issue fee and submit formal drawings. Applicant paid the Issue fee July 19, 2004; however, as no formal drawings were submitted by July 22, 2004, a Notice of Abandonment was mailed September 1, 2004. Applicant then filed this petition.

A grantable petition under 37 CFR 1.137(b), as revised December 1, 1997, requires four items: (1) a petition and petition fee; (2) a complete response if not earlier made; (3) a statement that the entire period of delay in prosecution was unintentional; and (4) a terminal disclaimer and disclaimer fee. The requirement for a terminal disclaimer has been waived, as the petition was submitted within one month of the mailing of the Notice of Abandonment.

Applicant's petition is **GRANTED.**

The terminal disclaimer fee of $55.00 will be refunded to applicant's Deposit Account 50-3172, as directed.

The application will be forwarded to Publications Branch to be issued into a Patent in due course.

Should there be any questions with respect to this decision, please contact Sandra Morris; by mail addressed to: Director, Technology Center 3700/2900, P.O. Box 1450, Alexandria, VA 22313-1450; or by telephone at (571) 272-2622.

John Kittle
Director, Technology Center 3700/2900

UNITED STATES PATENT AND TRADEMARK OFFICE

JUN 10 2004

Commissioner for Patents
United States Patent and Trademark Office
P.O. Box 1450
Alexandria, VA 22313-1450
www.uspto.gov

#6

SEAN A KAUFHOLD
P.O. BOX 131447
CARLSBAD, CA 92013

In re Application of	:
Kathleen C Kenimer et al.	:
Serial No.: 29/175,813	: PETITION DECISION
Filed: February 12, 2003	:
Attorney Docket No.: CTI226	:

This is a decision on applicants' Amendment, which is being treated as a Petition filed under 37 CFR 1.181 submitted March 19, 2004.

Applicants' petition is **DISMISSED.**

This application became abandoned for failure to fully respond to the Notice of Allowance mailed July 28, 2003, which set a three-month statutory period to submit the Issue Fee and formal drawings, or clarification of the drawings. Applicant submitted the Issue fee on August 18, 2003; however, as no formal drawings or response was received by October 28, 2003, a Notice of Abandonment was mailed March 4, 2004. Applicant then filed this petition.

Applicant has stated that the formal drawings were not required, as it was understood that the drawing inconsistency was corrected by Examiner's Amendment. In fact, the Examiner Amendment stated that correction or clarification was necessary, and the Notice of Allowability specifically states that corrected drawings must be submitted. Therefore, as applicant did not clarify and/or submit formal drawings, the application was correctly abandoned.

In order to revive this application, applicant may wish to submit a renewed petition under either 37 CFR 1.137(a) as being unavoidable, or 37 CFR 1.137(b) as being unintentional. A grantable petition under 37 CFR 1.137(b), as revised December 1, 1997, requires four items: (1) a petition and petition fee; (2) a complete response if not earlier made; (3) a statement that the entire period of delay in prosecution was unintentional; and (4) a terminal disclaimer and disclaimer fee.

Any renewed petition in order to be considered timely must be filed within TWO MONTHS of the date of mailing of this decision.

Should there be any questions with respect to this decision, please contact Sandra Morris; by mail addressed to: Director, Technology Center 3700/2900, P.O. Box 1450, Alexandria, VA 22313-1450; or by telephone at (571) 272-2622.

John Kittle
Director, Technology Center 3700/2900

UNITED STATES PATENT AND TRADEMARK OFFICE

Commissioner for Patents
United States Patent and Trademark Office
P.O. Box 1450
Alexandria, VA 22313-1450
www.uspto.go

6/27/05

Sean A. Kaufhold
P.O. Box 89626
Sioux Falls, SD 57109

In re Application of
Kathleen C Kenimer et al.
Serial No.: 29/175,813
Filed: February 12, 2003
Attorney Docket No.: CTI226

: PETITION DECISION

This is a decision on applicants' letter, which is being treated as a renewed Petition to Revive under 37 CFR 1.137(b) submitted originally with the incorrect serial number June 29, 2004, and now June 6, 2005, to revive an unintentionally abandoned application.

Applicant is advised that the correspondence received June 6, 2005 includes a different address than that of record in the application. A Change of Address must be filed with the Office if applicant wishes to receive correspondence at the Sioux Falls address.

This application became abandoned for failure to fully respond to the Notice of Allowance mailed July 28, 2003, which set a three-month statutory period to pay the issue fee and submit formal drawings, or clarification of the drawings. Applicant submitted the Issue fee on August 18, 2003; however, as no explanation or formal drawings were received by October 28, 2003, a Notice of Abandonment was mailed March 4, 2004. Applicant filed a letter, which was treated as a Petition to Revive under 37 CFR 1.181 March 19, 2004, which was dismissed.

As applicant was instructed in the previous petition, a grantable petition under 37 CFR 1.137(b), as revised December 1, 1997, requires four items: (1) a petition and petition fee; (2) a complete response if not earlier made; (3) a statement that the entire period of delay in prosecution was unintentional; and (4) a terminal disclaimer and disclaimer fee. Applicants petition lacks items 3 and 4; the complete statement (3) has not been submitted, and a terminal disclaimer and fee should also be submitted. Copies of a Petition and terminal disclaimer have been enclosed.

Applicants' petition is **DISMISSED.**

Any renewed petition in order to be considered timely must be filed within TWO MONTHS of the date of mailing of this decision.

Should there be any questions with respect to this decision, please contact Sandra Morris; by mail addressed to: Director, Technology Center 1700/2900, P.O. Box 1450, Alexandria, VA 22313-1450; or by telephone at (571) 272-2622.

Jacqueline Stone
Director, Technology Center 1700/2900

Jacqueline M. Stone

Jacqueline M. Stone, Director
Technology Center 1700

UNITED STATES PATENT AND TRADEMARK OFFICE

Commissioner for Patents
United States Patent and Trademark Office
P.O. Box 1450
Alexandria, VA 22313-1450
www.uspto.gov

Sean A. Kaufhold
P.O. Box 89626
Sioux Falls, SD 57109

9/22/05

In re Application of
Kathleen C Kenimer et al.
Serial No.: 29/175,813
Filed: February 12, 2003
Attorney Docket No.: CTI226

: PETITION DECISION

This is a decision on applicant's renewed petition to revive patent application under 37 CFR 1.137(b), filed July 25, 2005, to revive an unintentionally abandoned application.

This application became abandoned for failure to fully respond to the Notice of Allowance mailed July 28, 2003, which set a three-month statutory period to pay the issue fee and submit formal drawings, or clarification of the drawings. Applicant submitted the Issue fee on August 18, 2003; however, as no explanation or formal drawings were received by October 28, 2003, a Notice of Abandonment was mailed March 4, 2004. Applicant filed a letter, which was treated as a Petition to Revive under 37 CFR 1.181 March 19, 2004, which was dismissed. A petition under 37 CFR 1.137(b) was submitted June 6, 2005 which was dismissed due to deficiencies.

A grantable petition for a design application under 37 CFR 1.137(b), as revised December 1, 1997, requires four items: (1) a petition and petition fee; (2) a complete response if not earlier made; (3) a statement that the entire period of delay in prosecution was unintentional; and (4) a terminal disclaimer and disclaimer fee.

Applicant's petition is **GRANTED**.

The application will be forwarded to Publication Division for printing as a patent in due course.

Should there be any questions with respect to this decision, please contact Sandra Morris; by mail addressed to: Director, Technology Center 1700/2900, P.O. Box 1450, Alexandria, VA 22313-1450; or by telephone at (571) 272-2622.

Jacqueline M. Stone

Jacqueline Stone
Director, Technology Center 1700/2900

O I P E
JUL 0 7 2004
PATENT & TRADEMARK OFFICE

Docket No. CTI226

IN THE UNITED STATES PATENT AND TRADEMARK OFFICE

In Re Patent Application of
Kathleen C. Kenimer
Serial No.: ~~10/455,075~~ 29/175813
Filed: 02/12/2003
For: Belt with Pockets for Holding a Cooled Gel Packs
Examiner: Catherine Renee Oliver
Group Art Unit: 2914
Attorney: Sean A. Kaufhold

RECEIVED
SEP 2 1 2004
GROUP 3600

Mail Stop Non-Fee Amendment
Honorable Assistant Commissioner for Patents
P.O. Box 1450
Alexandria, VA 22313-1450

RECEIVED
JUL 1 2 2004
OFFICE OF PETITIONS

Responsive to a notice of abandonment.

REMARKS

Applicant has recently received a letter of petition decision from the USPTO regarding the above case. The letter states that the reason for dismissal is that the examiner's amendment stated that correction or clarification to the drawings was necessary.

Enclosed please find the corrected drawings, particularly new figure 5, filed with the patent office on 2/12/03, the petition fee, this petition for revival under 37 CFR 1.137(b), and the following statement that the delay was unintentional.

Based upon the notice of allowance, it was understood by the applicant that the drawing informality was corrected by an Examiner's amendment and that the filing of new drawings was unnecessary. For this reason, applicant timely filed the issuance fee but, however, did not include revised figures. Due to this unintentional mistake, the due date of the filing of the figures was missed and the application lapsed into abandonment.

Applicant respectfully requests that the Examiner accept the figures and the petition as satisfaction to the requirements for removing the abandonment status and to allow the application with the enclosed revised figures.

07/08/2004 CNGUYEN 00000085 10455075
01 FC:2453 665.00 OP

Respectfully submitted,

Date: 6/29/09

Sean A. Kaufhold (Reg. No. 46,820)
P.O. Box 131447
Carlsbad, CA 92013
(760) 470-3368 FAX (760) 631-1557

OIPE JC41
JUL 0 7 2004
PATENT & TRADEMARK OFFICE

PTO/SB/92 (05-03)
Approved for use through 04/30/2003. OMB 0561-0031
Patent and Trademark Office; U.S. DEPARTMENT OF COMMERCE
Under the Paperwork Reduction Act of 1995, no persons are required to respond to a collection of information unless it contains a valid OMB control number.

Certificate of Mailing under 37 CFR 1.8

I hereby certify that this correspondence is being deposited with the United States Postal Service with sufficient postage as first class mail in an envelope addressed to:

Commissioner for Patents
P.O. Box 1450
Alexandria, VA 22313-1450

on 6/29/04
Date

RECEIVED
SEP 2 1 2004
GROUP 3600

RECEIVED
JUL 1 2 2004
OFFICE OF PETITIONS

Signature

Jason Wormstadt
Typed or printed name of person signing Certificate

Note: Each paper must have its own certificate of mailing, or this certificate must identify each submitted paper.

Serial # 10/455,075
CTI 226 - 2 pages Petition
2 pages Drawings
1 check - Abandonment Revival Fee

This collection of information is required by 37 CFR 1.8. The information is required to obtain or retain a benefit by the public which is to file (and by the USPTO to process) an application. Confidentiality is governed by 35 U.S.C. 122 and 37 CFR 1.14. This collection is estimated to take 1.8 minutes to complete, including gathering, preparing, and submitting the completed application form to the USPTO. Time will vary depending upon the individual case. Any comments on the amount of time you require to complete this form and/or suggestions for reducing this burden, should be sent to the Chief Information Officer, U.S. Patent and Trademark Office, U.S. Department of Commerce, P.O. Box 1450, Alexandria, VA 22313-1450. DO NOT SEND FEES OR COMPLETED FORMS TO THIS ADDRESS. **SEND TO: Commissioner for Patents, P.O. Box 1450, Alexandria, VA 22313-1450.**

If you need assistance in completing the form, call 1-800-PTO-9199 and select option 2.

BEST AVAILABLE COPY

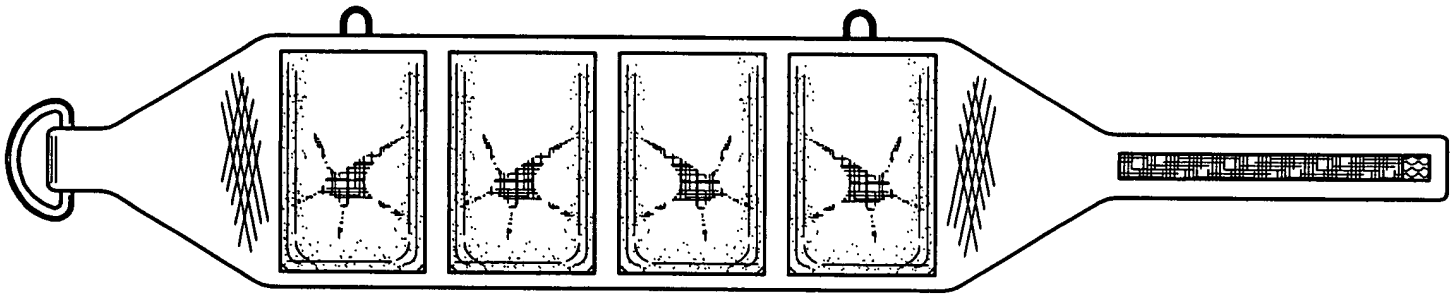

FIG. 1

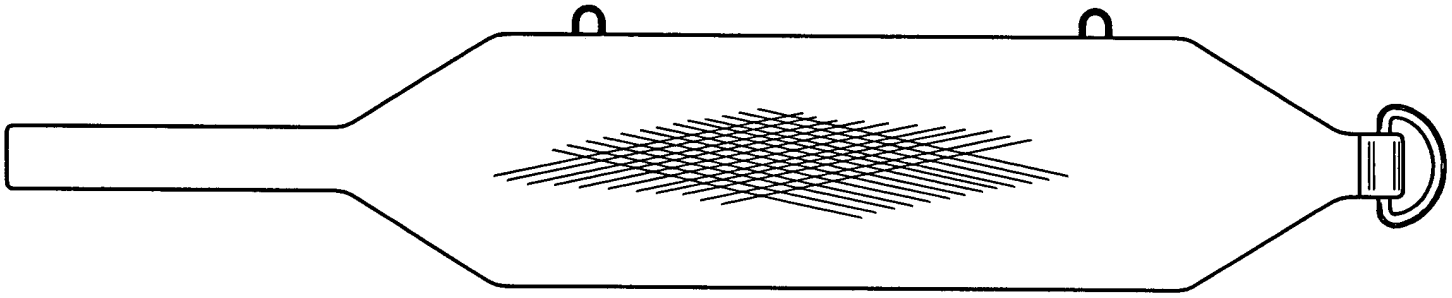

FIG. 2

O I P E JC41
JUL 0 7 2004
PATENT & TRADEMARK

BEST AVAILABLE COPY

FIG. 3

FIG. 4

FIG. 5

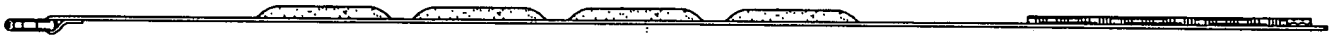

FIG. 6

OIPE JC42 JUL 07 2004 PATENT & TRADEMARK OFFICE

UNITED STATES PATENT AND TRADEMARK OFFICE

COMMISSIONER FOR PATENTS
UNITED STATES PATENT AND TRADEMARK OFFICE
P.O. BOX 1450
ALEXANDRIA, VA 22313-1450
www.uspto.gov

COPY MAILED

MAR 03 2006

OFFICE OF PETITIONS

GUDRUN E. HUCKETT DRAUDT
LONSSTR. 53
WUPPERTAL 42289 DE GERMANY

In re Application of	:
Schmidt	: DECISION ON PETITION
Application No. 29/175,821	:
Filed: February 12, 2003	:
Docket No.: 302212	:

This is a decision on the petition to withdraw the holding of abandonment under 37 CFR 1.181, filed February 10, 2006.

This application was held abandoned October 1, 2004 for failure to timely submit a proper reply to the Office communication mailed June 30, 2004. Notice of Abandonment was mailed February 3, 2006.

Petitioner asserts that a response to the Office communication was timely submitted on August 30, 2004 and has submitted as proof of USPTO receipt of the reply a return postcard dated stamped August 30, 2004. The petition is also accompanied by a copy of the response purportedly filed August 30, 2004 which bears a certificate of mailing date of August 26, 2004 in accordance with the provision set forth at 37 CFR 1.8.

The original amendment submitted August 30, 2004 has not been located. However, in view of the evidence presented, the petition to withdraw the holding of abandonment is hereby **GRANTED**.

The Notice of Abandonment is hereby **VACATED** and the holding of abandonment is **WITHDRAWN**.

The application file is being forwarded to Technology Center 2900 for further processing.

There is no indication in the official application file wrapper that petitioner was ever empowered to prosecute the instant application. If petitioner desires to receive future correspondence regarding this application the appropriate documentation must be submitted to the Office. **Petitioner is advised that all future correspondence will be directed to the address currently of record until such time as appropriate instructions are received to the contrary.**

Telephone inquiries concerning this matter may be directed to the undersigned at (571) 272-3205.

Alesia M. Brown
Petitions Attorney
Office of Petitions

CC: RICHARD M. MESCHER
41 SOUTH HIGH STREET
COLUMBUS, OH 43215-6194

UNITED STATES PATENT AND TRADEMARK OFFICE

COMMISSIONER FOR PATENTS
UNITED STATES PATENT AND TRADEMARK OFFICE
P.O. BOX 1450
ALEXANDRIA, VA 22313-1450
www.uspto.gov

Paper No.

TOUGH TRAVELER LTD.
1012 STATE ST.
SCHENECTADY, NY 12307

COPY MAILED

SEP 2 2 2005

OFFICE OF PETITIONS

In re Application of	:	
Dingman et al.	:	
Application No. 29/175,851	:	ON PETITION
Filed: February 11, 2003	:	
Title: VEST	:	
	:	

This is a decision on the Petition for Revival of an Application for Patent Abandoned Unavoidably under 37 CFR 1.137(a), filed August 8, 2005.

The petition under § 1.137(a) is **DISMISSED** without consideration on the merits.

Any request for reconsideration of this decision must be submitted within **TWO (2) MONTHS** from the mail date of this decision. The reconsideration request should include a cover letter entitled "Renewed Petition under 37 C.F.R. § 1.137(a)," or "Renewed Petition under 37 C.F.R. § 1.137(b)," as appropriate. Extensions of time are permitted under § 1.136(a).

The above-identified application became abandoned for failure to timely pay the required issue fee within the statutory period of three (3) months from the mailing date, April 20, 2005, of the Notice of Allowance and Fee(s) Due. No extensions of time are permitted for transmitting issue fees. Accordingly, the above-identified application became abandoned on July 21, 2005. The filing of the instant petition precedes the mailing of a courtesy Notice of Abandonment.

Applicants filed the instant petition, asserting that the entire delay in filing the required reply from the due date of the reply until the filing of a grantable petition was unavoidable. Accompanying the petition was payment of the $400 Issue Fee and a payment in the amount of $130 for the petition fee.

A grantable petition pursuant to § 1.137(a) must be accompanied by:

(1) The reply required to the outstanding Office action or notice, unless previously filed;
(2) The petition fee as set forth in § 1.17(l);
(3) A showing to the satisfaction of the Director that the entire delay in filing the required reply from the due date for the reply until the filing of a grantable petition pursuant to this paragraph was unavoidable; and
(4) Any terminal disclaimer (and fee as set forth in § 1.20(d)) required pursuant to paragraph (d) of this section.

Paragraph (d) provides, in pertinent part, that:

(1) Any petition to revive pursuant to this section in a design application must be accompanied by a terminal disclaimer and fee as set forth in § 1.321 dedicating to the public a terminal part of the term of any patent granted thereon equivalent to the period of abandonment of the application. Any petition to revive pursuant to this section in either a utility or plant application filed before June 8, 1995, must be accompanied by a terminal disclaimer and fee as set forth in § 1.321 dedicating to the public a terminal part of the term of any patent granted thereon equivalent to the lesser of:

(i) The period of abandonment of the application; or
(ii) The period extending beyond twenty years from the date on which the application for the patent was filed in the United States or, if the application contains a specific reference to an earlier filed application(s) under 35 U.S.C. 120, 121, or 365(c), from the date on which the earliest such application was filed.

However, 35 U.S.C. 41(a) (7) provides that a petition for the revival of an unintentionally abandoned application or for the unintentionally delayed payment of the issue fee must be accompanied by the petition fee set forth in 37 CFR 1.17(m), unless the petition is filed under 35 U.S.C. 133 or 151 (on the basis of unavoidable delay), in which case the fee is set forth in 37 CFR 1.17(l). Thus, unless the circumstances warrant the withdrawal of the holding of abandonment (i.e., it is determined that the application is not properly held abandoned), the payment of a petition fee to obtain the revival of an abandoned application is a statutory prerequisite to revival of the abandoned application, and cannot be waived.

In addition, the phrase "[o]n filing" in 35 U.S.C. 41(a)(7) means that the petition fee is required for the filing (and not merely the grant) of a petition under 37 CFR 1.137. See H.R. Rep. No. 542, 97th Cong., 2d Sess. 6 (1982), reprinted in 1982 U.S.C.C.A.N. 770 ("[t]he fees set forth in this section are due on filing the petition"). Therefore, the Office: (A) will not refund the petition fee required by 37 CFR 1.17(l) or 1.17(m), regardless of whether the petition under 37 CFR 1.137 is dismissed or denied; and (B) will not reach the merits of any petition under 37 CFR 1.137 lacking the requisite petition fee.

The petition fee set forth in 37 CFR 1.17(l) is currently $250 for a small entity. Petitioner has only submitted $130. The record does not include authorization to charge the fee deficiency of $120 to a Deposit Account. Accordingly, the Office will not reach the merits of the instant petition.

It is further noted that the circumstances of the abandonment of this application do not warrant withdrawal of the holding of abandonment.

In view thereof, the petition must be dismissed.

Further correspondence with respect to this matter should be addressed as follows:

By mail: Mail Stop Petition
Commissioner for Patents
P.O. Box 1450
Alexandria, VA 22313-1450

By FAX: (571) 273-8300
Attn: Office of Petitions

By hand: Customer Service Window
Randolph Building
401 Dulany Street
Alexandria, VA 22314

Telephone inquiries related to this decision should be directed to the undersigned at (571) 272-3219.

Nancy Johnson
Senior Petitions Attorney
Office of Petitions

UNITED STATES PATENT AND TRADEMARK OFFICE

Commissioner for Patents
United States Patent and Trademark Office
P.O. Box 1450
Alexandria, VA 22313-1450
www.uspto.gov

Paper No.

TOUGH TRAVELER LTD.
1012 STATE ST.
SCHENECTADY, NY 12307

COPY MAILED

JAN 2 5 2006

OFFICE OF PETITIONS

In re Application of	:	
Dingman et al.	:	
Application No. 29/175,851	:	ON PETITION
Filed: February 11, 2003	:	
Title: VEST	:	
	:	

This is a decision on the Petition for Revival of an Application for Patent Abandoned Unintentionally under 37 CFR 1.137(b), filed October 1, 2005.

The petition under § 1.137(b) is **DISMISSED**.

Any request for reconsideration of this decision must be submitted within **TWO (2) MONTHS** from the mail date of this decision. The reconsideration request should include a cover letter entitled "Renewed Petition under 37 C.F.R. § 1.137(b)." Extensions of time are permitted under § 1.136(a).

The above-identified application became abandoned for failure to timely pay the required issue fee within the statutory period of three (3) months from the mailing date, April 20, 2005, of the Notice of Allowance and Fee(s) Due. No extensions of time are permitted for transmitting issue fees. Accordingly, the above-identified application became abandoned on July 21, 2005. The filing of the instant petition precedes the mailing of a courtesy Notice of Abandonment.

An initial petition under § 1.137(a) filed August 8, 2005 was dismissed without consideration on the merits for failure to include the petition fee.

On instant petition, applicants requested revival based on the less stringent standard of unintentional delay. The reply required was previously filed on petition under § 1.137(a) filed August 8, 2005. The petition included a statement of unintentional delay and a terminal disclaimer.

A grantable petition pursuant to § 1.137(b) must be accompanied by:

(1) The reply required to the outstanding Office action or notice, unless previously filed;
(2) The petition fee as set forth in § 1.17(m);
(3) A showing to the satisfaction of the Director that the entire delay in filing the required reply from the due date for the reply until the filing of a grantable petition pursuant to this paragraph was unintentional; and
(4) Any terminal disclaimer (and fee as set forth in § 1.20(d)) required pursuant to paragraph (d) of this section.

Requirements (1) and (2) have clearly been met.

Requirement (3) has been met. However, 37 CFR 1.137(b)(3) requires a statement that "the entire delay in filing the required reply from the due date for the reply until the filing of a grantable petition pursuant to 37 CFR 1.137(b) was unintentional." The statement contained in the instant petition varies from the language required by 37 CFR 1.137(b)(3). The statement contained in the instant petition is being construed as the statement required by 37 CFR 1.137(b)(3). Petitioner must notify the Office if this is not a correct interpretation of the statement contained in the instant petition.

Requirement (4) is not met. Petitioner included a terminal disclaimer, no terminal disclaimer fee. Although the terminal disclaimer stated that a fee was included, no fee was present on review of this petition. The record does not include authorization to charge the fee deficiency to a Deposit Account. Accordingly, the petition must be dismissed.

Telephone inquiries related to this decision should be directed to the undersigned at (571) 272-3219.

Nancy Johnson
Senior Petitions Attorney
Office of Petitions

UNITED STATES PATENT AND TRADEMARK OFFICE

Commissioner for Patents
United States Patent and Trademark Office
P.O. Box 1450
Alexandria, VA 22313-1450
www.uspto.gov

Paper No.

TOUGH TRAVELER LTD.
1012 STATE ST.
SCHENECTADY, NY 12307

COPY MAILED

JUN 21 2006

OFFICE OF PETITIONS

In re Application of	:	
Dingman et al.	:	
Application No. 29/175,851	:	ON PETITION
Filed: February 11, 2003	:	
Title: VEST	:	
	:	

This is in response to the paper filed January 30, 2006, which is treated as a renewed Petition for Revival of an Application for Patent Abandoned Unintentionally under 37 CFR 1.137(b).

The petition under § 1.137(b) is **GRANTED**.

The above-identified application became abandoned for failure to timely pay the required issue fee within the statutory period of three (3) months from the mailing date, April 20, 2005, of the Notice of Allowance and Fee(s) Due. No extensions of time are permitted for transmitting issue fees. Accordingly, the above-identified application became abandoned on July 21, 2005. The filing of the instant petition precedes the mailing of a courtesy Notice of Abandonment.

An initial petition under § 1.137(a) filed August 8, 2005 was dismissed without consideration on the merits for failure to include the petition fee. By decision mailed January 25, 2006, a renewed petition under § 1.137(b) filed October 1, 2005, was dismissed for failure to include the required terminal disclaimer fee.

On instant petition, applicants submitted the disclaimer fee.

All requirements for revival have now been met and the petition is hereby granted.

The Office of Patent Publication has been advised of this decision. The application is, thereby, forwarded to the Publishing Division for processing into a patent.

Telephone inquiries related to this decision should be directed to the undersigned at (571) 272-3219.

Nancy Johnson
Senior Petitions Attorney
Office of Petitions

UNITED STATES PATENT AND TRADEMARK OFFICE

COMMISSIONER FOR PATENTS
UNITED STATES PATENT AND TRADEMARK OFFICE
P.O. BOX 1450
ALEXANDRIA, VA 22313-1450
www.uspto.gov

JAN 21 2005

Dart Industries, Inc.
14901 South Orange Blossom Trail
Orlando FL 32877

In re Application of
Tamotsu Matsumoto
Serial No.: 29/175,933
Filed: February 13, 2003
Attorney Docket No.: 131017-D200

: PETITION DECISION

This is a decision on applicant's Petition under 37 CFR 1.137(b) received October 27, 2004, to revive an unintentionally abandoned application. The delay in acting upon this petition is regretted; however, as it was labeled with the incorrect serial number, it was not initially matched with the application.

This application became abandoned for failure to respond to the Notice of Allowance mailed March 15, 2004, which set a three-month statutory period to pay the Issue fee and submit formal drawings. As no response was submitted by June 15, 2004, a Notice of Abandonment was mailed August 3, 2004. Applicant then filed this petition.

A grantable petition under 37 CFR 1.137(b), as revised December 1, 1997, requires four items: (1) a petition and petition fee; (2) a complete response if not earlier made; (3) a statement that the entire period of delay in prosecution was unintentional; and (4) a terminal disclaimer and disclaimer fee. The requirement for a terminal disclaimer has been waived, as the petition was submitted within three months of the mailing of the Notice of Abandonment.

Applicant's petition is **GRANTED.**

The Petition fee of $1370.00 will be charged to applicant's Deposit Account 04-0120, as directed.

The application will be forwarded to Publications Branch to be issued into a Patent in due course.

Should there be any questions with respect to this decision, please contact Sandra Morris; by mail addressed to: Director, Technology Center 1700/2900, P.O. Box 1450, Alexandria, VA 22313-1450; or by telephone at (571) 272-2622.

Jacqueline Stone
Director, Technology Center 1700/2900

UNITED STATES PATENT AND TRADEMARK OFFICE

COMMISSIONER FOR PATENTS
UNITED STATES PATENT AND TRADEMARK OFFICE
P.O. BOX 1450
ALEXANDRIA, VA 22313-1450
www.uspto.gov

JAN 31 2005

Dart Industries, Inc.
14901 South Orange Blossom Trail
Orlando FL 32877

In re Application of
Tamotsu Matsumoto
Serial No.: 29/175,933
Filed: February 13, 2003
Attorney Docket No.: 131017-D200

: PETITION DECISION

This is a decision on applicant's Petition under 37 CFR 1.137(b) received October 27, 2004, to revive an unintentionally abandoned application. The delay in acting upon this petition is regretted; however, as it was labeled with the incorrect serial number, it was not initially matched with the application.

This application became abandoned for failure to respond to the Notice of Allowance mailed March 15, 2004, which set a three-month statutory period to pay the Issue fee and submit formal drawings. As no response was submitted by June 15, 2004, a Notice of Abandonment was mailed August 3, 2004. Applicant then filed this petition.

A grantable petition under 37 CFR 1.137(b), as revised December 1, 1997, requires four items: (1) a petition and petition fee; (2) a complete response if not earlier made; (3) a statement that the entire period of delay in prosecution was unintentional; and (4) a terminal disclaimer and disclaimer fee. The requirement for a terminal disclaimer has been waived, as the petition was submitted within three months of the mailing of the Notice of Abandonment.

Applicant's petition is **GRANTED.**

The Petition fee of $1370.00 will be charged to applicant's Deposit Account 04-0120, as directed.

The application will be forwarded to Publications Branch to be issued into a Patent in due course.

Should there be any questions with respect to this decision, please contact Sandra Morris; by mail addressed to: Director, Technology Center 1700/2900, P.O. Box 1450, Alexandria, VA 22313-1450; or by telephone at (571) 272-2622.

JNStone

Jacqueline Stone
Director, Technology Center 1700/2900

UNITED STATES PATENT AND TRADEMARK OFFICE

JUL 16 2004

Commissioner for Patents
United States Patent and Trademark Office
P.O. Box 1450
Alexandria, VA 22313-1450
www.uspto.go

ARTHUR W FISHER, III
SUITE 316
5553 WEST WATERS AVENUE
TAMPA, FL 33634

#5

In re Application of	:
Fred M Mendelsohn et al.	:
Serial No.: 29/175,948	: PETITION DECISION
Filed: February 13, 2003	:
Attorney Docket No.:	:

This is a decision on applicant's Petition filed under 37 CFR 1.137(b) filed May 17, 2004, to revive an unintentionally abandoned application.

A review of the file history shows that applicant was sent a Notice to File Missing Parts on March 4, 2003, and was given a two month statutory period of time to respond. As no response was received by May 5, 3004, a Notice of Abandonment was mailed January 13, 2004. This petition followed.

This petition is **DISMISSED**.

A grantable petition under 37 CFR 1.137(b), as revised December 1, 1997, requires four items: (1) a petition and petition fee; (2) a complete response if not earlier made; (3) a statement that the entire period of delay in prosecution was unintentional; and (4) a terminal disclaimer and disclaimer fee. Applicant's petition lacks items (3) and (4). A terminal disclaimer (4) and fee is still needed, as for all design applications a terminal disclaimer must be filed (37 CFR 1.137(c)). And applicant's statement (3) does not state that the entire period from the due date for the required reply until the filing of a grantable petition was unintentional.

Applicant's petition must be **DISMISSED** in view of the deficiency noted above. Any renewed petition should be filed within **TWO MONTHS** of the mailing date of this letter in order to be considered timely.

Should there be any questions with respect to this decision, please contact Sandra Morris; by mail addressed to: Director, Technology Center 3700/2900, P.O. Box 1450, Alexandria, VA 22313-1450; or by telephone at (571) 272-2622.

John Kittle
Director, Technology Center 3700/2900

UNITED STATES PATENT AND TRADEMARK OFFICE

NOV 22 2004

Commissioner for Patents
United States Patent and Trademark Office
P.O. Box 1450
Alexandria, VA 22313-1450
www.uspto.gov

#1

ARTHUR W FISHER, III
SUITE 316
5553 WEST WATERS AVENUE
TAMPA FL 33634

In re Application of
Fred M Mendelsohn et al.
Serial No.: 29/175,948
Filed: February 13, 2003
Attorney Docket No.:

: PETITION DECISION

This is a decision on applicants' renewed Petition under 37 CFR 1.137(b) filed August 25, 2004, to revive an unintentionally abandoned application.

Applicants' petition is **GRANTED.**

The application will be forwarded to an Examiner for initial examination in due course.

Should there be any questions with respect to this decision, please contact Sandra Morris; by mail addressed to: Director, Technology Center 3700/2900, P.O. Box 1450, Alexandria, VA 22313-1450; or by telephone at (571) 272-2622.

John Kittle
Director, Technology Center 3700/2900

UNITED STATES PATENT AND TRADEMARK OFFICE

COMMISSIONER FOR PATENTS
UNITED STATES PATENT AND TRADEMARK OFFICE
P.O. BOX 1450
ALEXANDRIA, VA 22313-1450
WWW.USPTO.GOV

Paper No. None

STANDLEY LAW GROUP LLP
495 METRO PLACE SOUTH
SUITE 210
DUBLIN OH 43017

COPY MAILED

OCT 21 2004

OFFICE OF PETITIONS

In re Application of
Eric S. Allison
Application No. 29/176,110
Patent No. D490162
Filed: February 18, 2003
Issue Date: May 18, 2004
Attorney Docket No. DOM 1091-181B
Title: HOUSE FACADE

DECISION ON PETITION
UNDER 37 C.F.R. §1.28(c)

This is a notice regarding your request for acceptance of a fee deficiency submission under 37 CFR §1.28. On September 1, 1998, the Court of Appeals for the Federal Circuit held that 37 CFR §1.28(c) is the sole provision governing the time for correction of the erroneous payment of the issue fee as a small entity. See DH Technology v. Synergystex International, Inc. 154 F.3d 1333, 47 USPQ2d 1865 (Fed. Cir. Sept. 1, 1998).

The Office no longer investigates or rejects original or reissue applications under 37 CFR §1.56. 1098 Off. Gaz. Pat. Office 502 (January 3, 1989). Therefore, nothing in this notice is intended to imply that an investigation was done.

Your fee deficiency submission under 37 CFR §1.28 is hereby accepted. The petition is **GRANTED** accordingly.

This file is being forwarded to Files Repository.

The general phone number for the Office of Petitions which should be used for status requests is (571) 272-3282. Telephone inquiries regarding *this decision* should be directed to the undersigned at (571) 272-3225.

Paul Shanoski

Paul Shanoski
Senior Attorney
Office of Petitions
United States Patent and Trademark Office

UNITED STATES PATENT AND TRADEMARK OFFICE

Commissioner for Patents
United States Patent and Trademark Office
P.O. Box 1450
Alexandria, VA 22313-1450
www.uspto.gov

STANDLEY LAW GROUP
495 METRO PLACE SOUTH
SUITE 210
DUBLIN, OH 43017

COPY MAILED

JAN 1 1 2005

OFFICE OF PETITIONS

In re Application of	:	
Eric S. Allison	:	
Application No. 29/176,111	:	LETTER
Filed: February 18, 2003	:	
Attorney Docket No. DOM 1091-184B	:	

This is in response to the paper filed August 13, 2004, which is being treated under 37 CFR 1.27(g)(2) requesting that status as a Small Entity be removed.

In accordance with the August 13, 2004 request, status as a Small Entity has been removed.

This matter is being referred to Publishing Division.

Wan Laymon

Wan Laymon
Petitions Examiner
Office of Petitions
Office of the Deputy Commissioner
for Patent Examination Policy

UNITED STATES PATENT AND TRADEMARK OFFICE

Commissioner for Patents
United States Patent and Trademark Office
P.O. Box 1450
Alexandria, VA 22313-1450
www.uspto.gov

STANDLEY LAW GROUP LLP
495 METRO PLACE SOUTH
SUITE 210
DUBLIN, OH 43017

COPY MAILED

AUG 2 6 2004

OFFICE OF PETITIONS

In re Application of	:	
Eric S. Allison	:	NOTIFICATION UNDER
Application No. 29/176,112	:	37 CFR 1.28(c)
Filed: February 18, 2003	:	
Attorney Docket No. DOM 1091-183C	:	

This is a notice regarding your request for acceptance of a fee deficiency submission under 37 CFR 1.28(c), filed August 16, 2004.

37 CFR 1.28(c) states: "The deficiency is based on the amount of the fee, for other than a small entity, in effect at the time the deficiency is paid in full." Accordingly, the fee deficiency submission under 37 CFR 1.28 is hereby accepted.

The change of status to a large entity has been entered and made of record.

This application will be returned to Files Repository.

Telephone inquiries concerning this matter may be directed to the undersigned at (703)306-9200.

Edward J. Tannouse
Petitions Attorney
Office of Petitions
United States Patent and Trademark Office

UNITED STATES PATENT AND TRADEMARK OFFICE

Commissioner for Patents
United States Patent and Trademark Office
P.O. Box 1450
Alexandria, VA 22313-1450
www.uspto.gov
DIW 08-04

STANDLEY LAW GROUP LLP
495 METRO PLACE SOUTH
SUITE 210
DUBLIN OH 43017

COPY MAILED

AUG 3 1 2004

OFFICE OF PETITIONS

In re Application of	:	
Eric S. Allison	:	
Application No. 29/176,113	:	DECISION
Filed: 18 February, 2003	:	UNDER 37 CFR 1.28(c)
Attorney's Docket No. DOM 1091-183B	:	

This is in response to the deficiency fee payment filed pursuant to 37 CFR 1.28(c) on 16 August, 2004.

37 CFR 1.28(c) states, "The deficiency is based on the amount of the fee, for other than a small entity, in effect at the time the deficiency is paid in full."

The Office no longer investigates or rejects original or reissue applications under 37 CFR 1.56. **1098 Off. Gaz. Pat. Office 502 (January 3, 1989).** Therefore, nothing in this Notice is intended to imply that an investigation was done.

Your fee deficiency submission under 37 CFR 1.28 is hereby **ACCEPTED.**

Small entity status will no longer apply.

The file is being forwarded to Publishing Division for processing into a patent.

Telephone inquiries should be directed to the undersigned at (703)308-6918.

Douglas I. Wood
Senior Petitions Attorney
Office of Petitions

UNITED STATES PATENT AND TRADEMARK OFFICE

COMMISSIONER FOR PATENTS
UNITED STATES PATENT AND TRADEMARK OFFICE
P.O. BOX 1450
ALEXANDRIA, VA 22313-1450
www.uspto.gov

Paper No.

STANDLEY LAW GROUP LLP
495 METRO PLACE SOUTH
SUITE 210
DUBLIN, OH 43017-5315

COPY MAILED
SEP 0 2 2004
OFFICE OF PETITIONS

In re Application of :
Allison :
Application No. 29/176,114 :
Filed: February 18, 2003 :
For: HOUSE FAÇADE : NOTICE

This is a notice regarding your request for acceptance of a fee deficiency submission under 37 CFR 1.28. On September 1, 1998, the Court of Appeals for the Federal Circuit held that 37 CFR 1.28(c) is the sole provision governing the time for correction of the erroneous payment of the issue fee as a small entity. **See DH Technology v. Synergystex International, Inc. 154 F.3d 1333, 47 USPQ2d 1865 (Fed. Cir. Sept. 1, 1998).**

The Office no longer investigates or rejects original or reissue applications under 37 CFR 1.56. **1098 Off. Gaz. Pat. Office 502 (January 3, 1989).** Therefore, nothing in this Notice is intended to imply that an investigation was done.

Your fee deficiency submission under 37 CFR 1.28 is hereby **ACCEPTED.**

This file is an Image File Wrapper file and, as such, no forwarding of the file is necessary. Processing of the application by the Office of Initial Patent Examination continues in due course.

Telephone inquiries concerning this matter should be directed to the undersigned at (703) 305-0014.

Derek L. Woods
Petitions Attorney
Office of Petitions

UNITED STATES PATENT AND TRADEMARK OFFICE

Commissioner for Patents
United States Patent and Trademark Office
P.O. Box 1450
Alexandria, VA 22313-1450
www.uspto.gov

JOHN M. GUYNN
WORKMAN, NYDEGGER & SEELEY
1000 EAGLE GATE TOWER
60 EAST SOUTH TEMPLE
SALT LAKE CITY UT 84111

COPY MAILED

SEP 24 2004

OFFICE OF PETITIONS

In re Application of :
Dan E. Fischer et al :
Application No. 29/176,136 :
Filed: February 18, 2003 :
Attorney Docket No. 7678.750 :

ON PETITION

This is a decision on the petition, filed September 23, 2004, under 37 CFR 1.313(c)(3) to withdraw the above-identified application from issue after payment of the issue fee.

The petition is **GRANTED**.

The above-identified application is withdrawn from issue in favor of a continued prosecution application (CPA) under 37 CFR 1.53(d).

Petitioner is advised that the issue fee paid on December 30, 2003 in the parent application is not refundable nor can it be applied towards any new Notice of Allowance which may issue on the CPA filed September 23, 2004.

Telephone inquiries should be directed to the undersigned at (703) 305-8859.

The mattter is being referred to Technology Center Art Unit 2911 for processing of the CPA.

Karen Creasy

Karen Creasy
Petitions Examiner
Office of Petitions
Office of the Deputy Commissioner
for Patent Examination Policy

UNITED STATES PATENT AND TRADEMARK OFFICE

Commissioner for Patents
United States Patent and Trademark Office
P.O. Box 1450
Alexandria, VA 22313-1450
www.uspto.gov

JOHN M. GUYNN
WORKMAN, NYDEGGER & SEELEY
1000 EAGLE GATE TOWER
60 EAST SOUTH TEMPLE
SALT LAKE CITY UT 84111

COPY MAILED

SEP 24 2004

OFFICE OF PETITIONS

In re Application of :
Dan E. Fischer et al :
Application No. 29/176,136 :
Filed: February 18, 2003 :
Attorney Docket No. 7678.750 :

ON PETITION

This is a decision on the petition, filed September 23, 2004, under 37 CFR 1.313(c)(3) to withdraw the above-identified application from issue after payment of the issue fee.

The petition is **GRANTED**.

The above-identified application is withdrawn from issue in favor of a continued prosecution application (CPA) under 37 CFR 1.53(d).

Petitioner is advised that the issue fee paid on December 30, 2003 in the parent application is not refundable nor can it be applied towards any new Notice of Allowance which may issue on the CPA filed September 23, 2004.

Telephone inquiries should be directed to the undersigned at (703) 305-8859.

The mattter is being referred to Technology Center Art Unit 2911 for processing of the CPA.

Karen Creasy

Karen Creasy
Petitions Examiner
Office of Petitions
Office of the Deputy Commissioner
for Patent Examination Policy

UNITED STATES PATENT AND TRADEMARK OFFICE

Commissioner for Patents
United States Patent and Trademark Office
P.O. Box 1450
Alexandria, VA 22313-1450
www.uspto.gov

Paper No.

WORKMAN NYDEGGER (F/K/A WORKMAN NYDEGGER & SEELEY)
60 EAST SOUTH TEMPLE
1000 EAGLE GATE TOWER
SALT LAKE CITY, UT 84111

COPY MAILED

SEP 24 2004

OFFICE OF PETITIONS

ON PETITION

In re Application of	:
Dan E. Fischer et al	:
Application No. 29/176,173	:
Filed: February 18, 2003	:
Attorney Docket No. 7678.752	:

This is a decision on the petition, filed September 24, 2004, under 37 CFR 1.313(c)(3) to withdraw the above-identified application from issue after payment of the issue fee.

The petition is **GRANTED**.

The above-identified application is hereby withdrawn from issue in favor of a continued prosecution application (CPA) under 37 CFR 1.53(d).

Petitioner is advised that the issue fee paid on December 30, 2003 in the parent application is not refundable nor can it be applied towards any new Notice of Allowance which may issue on the CPA filed September 24, 2004.

Telephone inquiries should be directed to the undersigned at (571) 272-3220.

The application is being forwarded to Technology Center AU 2911 for processing of the CPA.

Wan Laymon
Petitions Examiner
Office of Petitions
Office of the Deputy Commissioner
for Patent Examination Policy

UNITED STATES PATENT AND TRADEMARK OFFICE

NOV 22 2004

DEC 28 2004

Commissioner for Patents
United States Patent and Trademark Office
P.O. Box 1450
Alexandria, VA 22313-1450
www.uspto.gov

MARK STOLLER
11 SUGAR CREEK CT
LAKE OF THE HILLS, IL 60156

In re Application of	:
Mark Stoller	:
Serial No.: 29/176,245	: PETITION DECISION
Filed: February 19, 2003	:
Attorney Docket No.:	:

This is a decision on applicant's Petition under 37 CFR 1.137(b) submitted March 8, 2004 and again on August 24, 2004, to revive an unintentionally abandoned application.

Applicant is advised that he is required to submit an official Change of Address form with the Patent Office when the address has changed; a form has been enclosed for applicant's use.

This application became abandoned for failure to fully respond to the Notice of Allowance mailed August 6, 2003, which set a three-month statutory period to pay the Issue fee. As no response was submitted by November 6, 2003, a Notice of Abandonment was mailed March 11, 2004. Applicant then filed this petition.

A grantable petition under 37 CFR 1.137(b), as revised December 1, 1997, requires four items: (1) a petition and petition fee; (2) a complete response if not earlier made; (3) a statement that the entire period of delay in prosecution was unintentional; and (4) a terminal disclaimer and disclaimer fee. The requirement for a terminal disclaimer has been waived, as the petition was submitted before the mailing of the Notice of Abandonment.

Applicant's petition is **GRANTED.**

The application will be forwarded to Publications Branch to be issued into a Patent in due course.

Should there be any questions with respect to this decision, please contact Sandra Morris; by mail addressed to: Director, Technology Center 3700/2900, P.O. Box 1450, Alexandria, VA 22313-1450; or by telephone at (571) 272-2622.

John Kittle
Director, Technology Center 3700/2900

UNITED STATES PATENT AND TRADEMARK OFFICE

Commissioner for Patents
United States Patent and Trademark Office
P.O. Box 1450
Alexandria, VA 22313-1450
www.uspto.gov

3M INNOVATIVE PROPERTIES COMPANY
P.O. BOX 33427
ST. PAUL MN 55133-3427

COPY MAILED
AUG 1 1 2004
OFFICE OF PETITIONS

In re Application of :
Wayne L. Liedtke et al :
Application No. 29/176,266 : ON PETITION
Filed: February 19, 2003 :
Attorney Docket No. 58303US002 :

This is a decision on the petition, filed August 10, 2004, under 37 CFR 1.313(c)(3) to withdraw the above-identified application from issue after payment of the issue fee.

The petition is **GRANTED**.

The above-identified application is withdrawn from issue in favor of a continued prosecution application (CPA) under 37 CFR 1.53(d).

Petitioner is advised that the issue fee paid on May 28, 2004 in the parent application is not refundable nor can it be applied towards any new Notice of Allowance which may issue on the CPA filed August 10, 2004.

Telephone inquiries should be directed to the undersigned at (703) 305-8859.

The application will be referred to Technology Center Art Unit 2914 for processing of the CPA.

Karen Creasy

Karen Creasy
Petitions Examiner
Office of Petitions
Office of the Deputy Commissioner
for Patent Examination Policy

UNITED STATES PATENT AND TRADEMARK OFFICE

COMMISSIONER FOR PATENTS
UNITED STATES PATENT AND TRADEMARK OFFICE
P.O. BOX 1450
ALEXANDRIA, VA 22313-1450
www.uspto.gov

MYERS & KAPLAN, INTELLECTUAL PROPERTY LAW, L.L.C.
1899 POWERS FERRY ROAD
SUITE 310
ATLANTA GA 30339

FEB 12 2005

In re Application of
Clarence E. Boles
Serial No.: 29/176,285
Filed: February 21, 2003
Attorney Docket No.:

: PETITION DECISION

This is a decision on applicant's Petition under 37 CFR 1.137(b) received October 14, 2004, to revive an unintentionally abandoned application.

This application became abandoned for failure to respond to the Notice of Allowance mailed April 21, 2004, which set a three-month statutory period to pay the Issue fee and submit formal drawings. Applicant submitted formal drawings on May 25, 2004; however, as the Issue fee was not submitted by July 21, 2004, the application was abandoned. Applicant then filed this petition.

A grantable petition under 37 CFR 1.137(b), as revised December 1, 1997, requires four items: (1) a petition and petition fee; (2) a complete response if not earlier made; (3) a statement that the entire period of delay in prosecution was unintentional; and (4) a terminal disclaimer and disclaimer fee. The requirement for a terminal disclaimer has been waived, as the petition was submitted before the mailing of the Notice of Abandonment.

Applicant's petition is **GRANTED.**

The $55.00 Terminal Disclaimer fee will be refunded to applicant by Treasury check in due course.

The application will be forwarded to Publications Branch to be issued into a Patent.

Should there be any questions with respect to this decision, please contact Sandra Morris; by mail addressed to: Director, Technology Center 1700/2900, P.O. Box 1450, Alexandria, VA 22313-1450; or by telephone at (571) 272-2622.

JMStone
Jacqueline Stone
Director, Technology Center 1700/2900

UNITED STATES PATENT AND TRADEMARK OFFICE

COMMISSIONER FOR PATENTS
UNITED STATES PATENT AND TRADEMARK OFFICE
P.O. BOX 1450
ALEXANDRIA, VA 22313-1450
www.uspto.gov

Stan Mavis
7129 Cedarwood Circle
Boulder, CO 80301

COPY MAILED

JUL 14 2003

OFFICE OF PETITIONS

In re Application of: :
Stan Mavis and Lois Dwoning :
Application No. 29/176,366 :
Filed: February 22, 2003 :
Title of Invention:SOCK : LETTER

Dear Mr. Mavis:

You are named as a joint inventor in the above-identified United States patent application filed under the provisions of 35 U.S.C. 116 (United States Code) and 37 CFR 1.47(a), Rules of Practice in Patent Cases. Should a patent be granted on the application you will be designated therein as a joint inventor.

As a named inventor you are entitled to inspect any paper in the file wrapper of the application, order copies of all or any part thereof (at a prepaid cost per 37 CFR 1.19) or make your position of record in the application. Alternatively, you may arrange to do any of the preceding through a registered patent attorney or agent presenting written authorization from you. If you care to join the application, counsel of record (see below) would presumably assist you. Joining in the application would entail the filing of an appropriate oath or declaration by you pursuant to 37 CFR 1.63.

Telephone inquiries regarding this communication should be directed to the undersigned at (703) 305-0014. Requests for information regarding your application should be directed to the File Information Unit at (703) 308-2733. Information regarding how to pay for and order a copy of the application, or a specific paper in the application, should be directed to Certification Division at (703) 308-9726 or 1-800-972-6382 (outside the Washington D.C. area).

Derek L. Woods
Petitions Attorney
Office of Petitions

cc: MICHAEL ZALL
TWO YORKSHIRE DRIVE
SUFFERN, NY 10901

UNITED STATES PATENT AND TRADEMARK OFFICE

COMMISSIONER FOR PATENTS
UNITED STATES PATENT AND TRADEMARK OFFICE
P.O. BOX 1450
ALEXANDRIA, VA 22313-1450
www.uspto.gov

COPY MAILED

JUL 1 4 2003

OFFICE OF PETITIONS

Paper No. 5

MICHAEL ZALL
TWO YORKSHIRE DRIVE
SUFFERN, NY 10901

In re Application of:	:	DECISION GRANTING
Stan Mavis and Lois Dwoning	:	STATUS
Application No. 29/176,366	:	UNDER 37 CFR 1.47(a)
Filed: February 22, 2003	:	
Title of Invention:SOCK	:	

This Decision is in response to a Petition Under 37 C.F.R. 1.47(a), filed May 2, 2003, to allow the other inventor(s) to proceed with the application on behalf of himself or herself and the nonsigning inventor.

The petition is **granted**.

The above-identified application and papers have been reviewed and found in compliance with 37 CFR 1.47(a). This application is hereby accorded Rule 1.47(a) status.

Petitioner has shown that the non-signing inventor, Stan Mavis, refuses to sign the declaration.

As provided in Rule 1.47(a), this Office will forward notice of this application's filing to the non-signing inventor at the address given in the Petition. Notice of the filing of this application will also be published in the Official Gazette.

The application file is being returned to the Office of Initial Patent Examination for continued processing.

Telephone inquiries related to this decision may be directed to the undersigned at (703) 305-0014.

Derek L. Woods
Petitions Attorney
Office of Petitions

UNITED STATES PATENT AND TRADEMARK OFFICE

COMMISSIONER FOR PATENTS
UNITED STATES PATENT AND TRADEMARK OFFICE
P.O. BOX 1450
ALEXANDRIA, VA 22313-1450
www.uspto.gov

COPY MAILED

JUL 14 2003

OFFICE OF PETITIONS

Paper No. 5

MICHAEL ZALL
TWO YORKSHIRE DRIVE
SUFFERN, NY 10901

In re Application of:	:	DECISION GRANTING
Stan Mavis and Lois Dwoning	:	STATUS
Application No. 29/176,367	:	UNDER 37 CFR 1.47(a)
Filed: February 22, 2003	:	
Title of Invention: SOCK	:	

This Decision is in response to a Petition Under 37 C.F.R. 1.47(a), filed May 2, 2003, to allow the other inventor(s) to proceed with the application on behalf of himself or herself and the nonsigning inventor.

The petition is **granted**.

The above-identified application and papers have been reviewed and found in compliance with 37 CFR 1.47(a). This application is hereby accorded Rule 1.47(a) status.

Petitioner has shown that the non-signing inventor, Stan Mavis, refuses to sign the declaration.

As provided in Rule 1.47(a), this Office will forward notice of this application's filing to the non-signing inventor at the address given in the Petition. Notice of the filing of this application will also be published in the Official Gazette.

The application file is being returned to the Office of Initial Patent Examination for continued processing.

Telephone inquiries related to this decision may be directed to the undersigned at (703) 305-0014.

Derek L. Woods
Petitions Attorney
Office of Petitions

UNITED STATES PATENT AND TRADEMARK OFFICE

COMMISSIONER FOR PATENTS
UNITED STATES PATENT AND TRADEMARK OFFICE
P.O. BOX 1450
ALEXANDRIA, VA 22313-1450
www.uspto.gov

Stan Mavis
7129 Cedarwood Circle
Boulder, CO 80301

COPY MAILED

JUL 1 4 2003

OFFICE OF PETITIONS

In re Application of:
Stan Mavis and Lois Dwoning
Application No. 29/176,367
Filed: February 22, 2003
Title of Invention: SOCK

LETTER

Dear Mr. Mavis:

You are named as a joint inventor in the above-identified United States patent application filed under the provisions of 35 U.S.C. 116 (United States Code) and 37 CFR 1.47(a), Rules of Practice in Patent Cases. Should a patent be granted on the application you will be designated therein as a joint inventor.

As a named inventor you are entitled to inspect any paper in the file wrapper of the application, order copies of all or any part thereof (at a prepaid cost per 37 CFR 1.19) or make your position of record in the application. Alternatively, you may arrange to do any of the preceding through a registered patent attorney or agent presenting written authorization from you. If you care to join the application, counsel of record (see below) would presumably assist you. Joining in the application would entail the filing of an appropriate oath or declaration by you pursuant to 37 CFR 1.63.

Telephone inquiries regarding this communication should be directed to the undersigned at (703) 305-0014. Requests for information regarding your application should be directed to the File Information Unit at (703) 308-2733. Information regarding how to pay for and order a copy of the application, or a specific paper in the application, should be directed to Certification Division at (703) 308-9726 or 1-800-972-6382 (outside the Washington D.C. area).

Derek L. Woods
Petitions Attorney
Office of Petitions

cc: MICHAEL ZALL
TWO YORKSHIRE DRIVE
SUFFERN, NY 10901

UNITED STATES PATENT AND TRADEMARK OFFICE

COMMISSIONER FOR PATENTS
UNITED STATES PATENT AND TRADEMARK OFFICE
P.O. BOX 1450
ALEXANDRIA, VA 22313-1450
WWW.USPTO.GOV

Paper No. 5

COPY MAILED

JUL 17 2003

OFFICE OF PETITIONS

Michael Zall
Two Yorkshire Drive
Suffern, NY 10901

In re Application of
Mavis and Downing
Application No: 29/176,368
Filed: February 22, 2003
Attorney Docket No.: 3.1-028
For: SOCK

DECISION ACCORDING
RULE 47(a) STATUS

This is in response to the petition under 37 CFR 1.47(a), filed May 2, 2003.

The petition is **GRANTED**.

The above-identified application was filed on February 22, 2003, without an executed oath or declaration. On March 17, 2003, a "Notice of Missing Parts of Nonprovisional Application was mailed providing applicant with an extendable period of two months from the notice's mailing date to remit the filing fee, a proper oath or declaration, and the surcharge of $130.00 for the late filing of the declaration. In response, thereto, the instant petition was filed on many 2, 2003, and was accompanied by several corroborative documents and a declaration executed by inventor Downing, and the surcharge and filing fee.

Petitioner has shown that the non-signing inventor has refused to join the prosecution of the above-cited application after having been presented with the application papers. The above-identified application and papers have been reviewed and found in compliance with 37 CFR 1.47(a). This application is hereby accorded Rule 1.47(a) status.

As provided in Rule 1.47(c), this Office will forward notice of this application's filing to the non-signing inventor at the address given in the petition. Notice of the filing of this application will also be published in the Official Gazette.

This application will be forwarded the Office of Initial Patent Examination for further processing.

Telephone inquiries regarding this matter should be directed to the undersigned at (703) 305-0010.

Kenya A. McLaughlin

Kenya A. McLaughlin
Petitions Attorney
Office of Petition

UNITED STATES PATENT AND TRADEMARK OFFICE

COMMISSIONER FOR PATENTS
UNITED STATES PATENT AND TRADEMARK OFFICE
WASHINGTON, D.C. 20231
www.uspto.gov

COPY MAILED

JUL 17 2003

OFFICE OF PETITIONS

LETTER

Stan Mavis
7129 Cedarwood Circle
Boulder, Colorado 80301

In re Application of
Mavis and Downing
Application No. 29/176,368
Filed: February 22, 2003
Attorney Docket Number: 3.1-028
For: SOCK

Dear Mr. Mavis:

You are named as a joint inventor in the above-identified United States patent application filed under the provisions of 35 U.S.C. 116 (United States Code) and 37 CFR 1.47(a), Rules of Practice in Patent Cases. Should a patent be granted on the application you will be designated therein as a joint inventor.

As a joint inventor, you are entitled to inspect any paper in the file wrapper of the application, order copies of all or any part thereof (at a prepaid cost per 37 CFR 1.19) or make your position of record in the application. Alternatively, you may arrange to do any of the preceding through a registered patent attorney or agent presenting written authorization from you. If you care to join the application, counsel of record (see below) would presumably assist you. Joining in the application would entail the filing of an appropriate oath or declaration by you pursuant to 37 CFR 1.63.

Telephone inquiries regarding this communication should be directed to Petitions Attorney Kenya A. McLaughlin at (703) 305-0010. Requests for information regarding your application should be directed to the File Information Unit at (703) 308-2733. Information regarding how to pay for and order a copy of the application, or a specific paper in the application, should be directed to Certification Division at (703) 308-9726 or 1-800-972-6382 (outside the Washington D.C. area).

Kenya A. McLaughlin

Kenya A. McLaughlin
Petitions Attorney
Office of Petitions

Michael Zall
Two Yorkshire Drive
Suffern, NY 10901

UNITED STATES PATENT AND TRADEMARK OFFICE

COMMISSIONER FOR PATENTS
UNITED STATES PATENT AND TRADEMARK OFFICE
P.O. BOX 1450
ALEXANDRIA, VA 22313-1450
WWW.USPTO.GOV

COPY MAILED

JUL 17 2003

OFFICE OF PETITIONS

Michael Zall
Two Yorkshire Drive
Suffern, NY 10901

In re Application of
Mavis and Downing
Application No: 29/176,369
Filed: February 22, 2003
Attorney Docket No.: 3.1-028
For: SOCK

DECISION ACCORDING
RULE 47(a) STATUS

This is in response to the petition under 37 CFR 1.47(a), filed May 2, 2003.

The petition is **GRANTED**.

The above-identified application was filed on February 22, 2003, without an executed oath or declaration. On March 17, 2003, a "Notice of Missing Parts of Nonprovisional Application was mailed providing applicant with an extendable period of two months from the notice's mailing date to remit the filing fee, a proper oath or declaration, and the surcharge of $130.00 for the late filing of the declaration. In response, thereto, the instant petition was filed on many 2, 2003, and was accompanied by several corroborative documents and a declaration executed by inventor Downing, and the surcharge and filing fee.

Petitioner has shown that the non-signing inventor has refused to join the prosecution of the above-cited application after having been presented with the application papers. The above-identified application and papers have been reviewed and found in compliance with 37 CFR 1.47(a). This application is hereby accorded Rule 1.47(a) status.

As provided in Rule 1.47(c), this Office will forward notice of this application's filing to the non-signing inventor at the address given in the petition. Notice of the filing of this application will also be published in the Official Gazette.

This application will be forwarded the Office of Initial Patent Examination for further processing.

Telephone inquiries regarding this matter should be directed to the undersigned at (703) 305-0010.

Kenya A. McLaughlin
Petitions Attorney
Office of Petition

UNITED STATES PATENT AND TRADEMARK OFFICE

COMMISSIONER FOR PATENTS
UNITED STATES PATENT AND TRADEMARK OFFICE
WASHINGTON, D.C. 20231
www.uspto.gov

Stan Mavis
7129 Cedarwood Circle
Boulder, Colorado 80301

COPY MAILED

JUL 17 2003

OFFICE OF PETITIONS

In re Application of
Mavis and Downing
Application No. 29/176,369
Filed: February 22, 2003
Attorney Docket Number: 3.1-028
For: SOCK

LETTER

Dear Mr. Mavis:

You are named as a joint inventor in the above-identified United States patent application filed under the provisions of 35 U.S.C. 116 (United States Code) and 37 CFR 1.47(a), Rules of Practice in Patent Cases. Should a patent be granted on the application you will be designated therein as a joint inventor.

As a joint inventor, you are entitled to inspect any paper in the file wrapper of the application, order copies of all or any part thereof (at a prepaid cost per 37 CFR 1.19) or make your position of record in the application. Alternatively, you may arrange to do any of the preceding through a registered patent attorney or agent presenting written authorization from you. If you care to join the application, counsel of record (see below) would presumably assist you. Joining in the application would entail the filing of an appropriate oath or declaration by you pursuant to 37 CFR 1.63.

Telephone inquiries regarding this communication should be directed to Petitions Attorney Kenya A. McLaughlin at (703) 305-0010. Requests for information regarding your application should be directed to the File Information Unit at (703) 308-2733. Information regarding how to pay for and order a copy of the application, or a specific paper in the application, should be directed to Certification Division at (703) 308-9726 or 1-800-972-6382 (outside the Washington D.C. area).

Kenya A. McLaughlin

Kenya A. McLaughlin
Petitions Attorney
Office of Petitions

Michael Zall
Two Yorkshire Drive
Suffern, NY 10901

COMMISSIONER FOR PATENTS
UNITED STATES PATENT AND TRADEMARK OFFICE
P.O. BOX 1450
ALEXANDRIA, VA 22313-1450
WWW.USPTO.GOV

COPY MAILED

JUL 17 2003

OFFICE OF PETITIONS

Michael Zall
Two Yorkshire Drive
Suffern, NY 10901

In re Application of Mavis and Downing Application No: 29/176,369 Filed: February 22, 2003 Attorney Docket No.: 3.1-028 For: SOCK	: : : : : :	DECISION ACCORDING RULE 47(a) STATUS

This is in response to the petition under 37 CFR 1.47(a), filed May 2, 2003.

The petition is **GRANTED.**

The above-identified application was filed on February 22, 2003, without an executed oath or declaration. On March 17, 2003, a "Notice of Missing Parts of Nonprovisional Application was mailed providing applicant with an extendable period of two months from the notice's mailing date to remit the filing fee, a proper oath or declaration, and the surcharge of $130.00 for the late filing of the declaration. In response, thereto, the instant petition was filed on many 2, 2003, and was accompanied by several corroborative documents and a declaration executed by inventor Downing, and the surcharge and filing fee.

Petitioner has shown that the non-signing inventor has refused to join the prosecution of the above-cited application after having been presented with the application papers. The above-identified application and papers have been reviewed and found in compliance with 37 CFR 1.47(a). This application is hereby accorded Rule 1.47(a) status.

As provided in Rule 1.47(c), this Office will forward notice of this application's filing to the non-signing inventor at the address given in the petition. Notice of the filing of this application will also be published in the Official Gazette.

This application will be forwarded the Office of Initial Patent Examination for further processing.

Telephone inquiries regarding this matter should be directed to the undersigned at (703) 305-0010.

Kenya A. McLaughlin

Kenya A. McLaughlin
Petitions Attorney
Office of Petition

UNITED STATES PATENT AND TRADEMARK OFFICE

COMMISSIONER FOR PATENTS
UNITED STATES PATENT AND TRADEMARK OFFICE
P.O. BOX 1450
ALEXANDRIA, VA 22313-1450
WWW.USPTO.GOV

Paper No. 5

Michael E. Zall
ASICS TIGER Corporation
Two Yorkshire Drive
Suffern, NY 10901

COPY MAILED

SEP 15 2003

OFFICE OF PETITIONS

In re Application of	:	
Stan Mavis and Lois Downing	:	
Application No. 29/176,373	:	DECISION ACCORDING STATUS
Filed: **February 24, 2003**	:	UNDER 37 CFR § 1.47(a)
Attorney Docket No. 3.1-027	:	
Title: SOCK	:	

This is a decision on the "PETITION UNDER 37 CFR § 1.47(a)," filed May 2, 2003.

The petition is **GRANTED**.

The above-identified application was filed on February 24, 2003, with an unexecuted declaration and missing the statutory basic filing fee. Stan Mavis and Lois Downing were named as joint inventors. Accordingly, on March 27, 2003, a "Notice to File Missing Parts of Nonprovisional Application" was mailed, requiring the missing items, including an executed oath or declaration and a surcharge for late filing. This Notice set a period for reply of two months from the mailing date of the Notice, with extensions of time obtainable under § 1.136(a).

In response, rule 47 applicant filed the instant petition (and fee); the basic statutory filing fee; the late surcharge; and a declaration executed by inventor Downing on behalf of herself and on behalf of non-signing joint inventor Mavis. Rule 47 applicant maintains that status under 37 CFR 1.47 is proper because joint inventor Mavis has refused to join in the application for patent.

A grantable petition under 37 CFR 1.47(a) requires: (1) proof that the non-signing inventor cannot be reached or refuses to sign the oath or declaration after having been presented with the application papers (specification, claims and drawings); (2) an

acceptable oath or declaration in compliance with 35 U.S.C. §§ 115 and 116; (3) the petition fee; and (4) a statement of the last known address of the non-signing inventor.

Petitioner has shown that the non-signing inventor has refused to join in the filing of the above-identified application after having been presented with the application papers. On petition, with supporting documentary evidence, petitioner has shown that inventor Mavis, by his conduct in not responding to the presentation of the application papers and request to sign the declaration, has refused to join in the application. Inventor Mavis' "last known address in Boulder, Colorado" is deemed to be that set forth in the declaration.

The declaration filed May 2, 2003, and the petition have been reviewed and found in compliance with 37 CFR 1.47(a).

This application is hereby accorded Rule 1.47(a) status.

As provided in new Rule 1.47(c), this Office will forward notice of this application's filing to the non-signing inventor at the address given in the petition. Notice of the filing of this application will also be published in the Official Gazette.

The application file is being returned to the Office of Initial Patent Examination for completion of pre-examination processing.

Telephone inquiries regarding this decision should be directed to the undersigned at (703) 305-0309.

Nancy Johnson
Senior Petitions Attorney
Office of Petitions

UNITED STATES PATENT AND TRADEMARK OFFICE

Commissioner for Patents
United States Patent and Trademark Office
P.O. Box 1450
Alexandria, VA 22313-1450
www.uspto.gov

DAVID A. SILVA
2314 LAFAYETTE ST
SANTA CLARA, CA 95050

In re Application of	
David A Silva	:
Serial No.: 29/176,386	:
Filed: February 24, 2003	: PETITION DECISION
Attorney Docket No.:	:
	:

9/29/05

This is a decision on applicant's renewed petition to revive patent application under 37 CFR 1.137(b), filed June 19, 2005, to revive an unintentionally abandoned application.

This application became abandoned for failure to timely respond to the Notice of Allowance mailed June 13, 2003, which set a three month statutory period of time to submit the Issue fee and formal drawings. As no response was received by September 15, 2003, a Notice of Abandonment was mailed March 10, 2004. Applicant filed a petition February 24, 2005, which was dismissed due to deficiencies.

A grantable petition for a design application under 37 CFR 1.137(b), as revised December 1, 1997, requires four items: (1) a petition and petition fee; (2) a complete response if not earlier made; (3) a statement that the entire period of delay in prosecution was unintentional; and (4) a terminal disclaimer and disclaimer fee.

Applicant's petition is **GRANTED**.

The application will be forwarded to Publication Division for printing as a patent in due course.

Should there be any questions with respect to this decision, please contact Sandra Morris; by mail addressed to: Director, Technology Center 1700/2900, P.O. Box 1450, Alexandria, VA 22313-1450; or by telephone at (571) 272-2622.

Jacqueline M. Stone

Jacqueline Stone
Director, Technology Center 1700/2900

UNITED STATES PATENT AND TRADEMARK OFFICE

COMMISSIONER FOR PATENTS
UNITED STATES PATENT AND TRADEMARK OFFICE
P.O. BOX 1450
ALEXANDRIA, VA 22313-1450
www.uspto.gov

5/18/05

DAVID A. SILVA
2314 LAFAYETTE ST
SANTA CLARA, CA 95050

In re Application of
David A Silva
Serial No.: 29/176,386
Filed: February 24, 2003
Attorney Docket No.:

: PETITION DECISION

This is a decision on applicant's petition to revive patent application under 37 CFR 1.137(b), filed February 24, 2005, to revive an unintentionally abandoned application.

Applicant's petition is **DISMISSED.**

This application became abandoned for failure to timely respond to the Notice of Allowance mailed June 13, 2003 which set a three month statutory period of time to submit the Issue fee and formal drawings. As no response was received by September 15, 2003, a Notice of Abandonment was mailed March 10, 2004; this petition followed.

A grantable petition under 37 CFR 1.137(b), as revised December 1, 1997, requires four items: (1) a petition and petition fee; (2) a complete response if not earlier made; (3) a statement that the entire period of delay in prosecution was unintentional; and (4) a terminal disclaimer and disclaimer fee. Applicant's petition lacks a complete response (2), as applicant did not make the required corrections to the formal drawings; the new drawings appear to be unchanged from those originally filed. Furthermore, a terminal disclaimer and fee (4) are also required, a copy of which has been enclosed.

Any renewed petition in order to be considered timely must be filed within TWO MONTHS of the date of mailing of this decision.

Should there be any questions with respect to this decision, please contact Sandra Morris; by mail addressed to: Director, Technology Center 1700/2900, P.O. Box 1450, Alexandria, VA 22313-1450; or by telephone at (571) 272-2622.

JMstone

Jacqueline Stone
Director, Technology Center 1700/2900

UNITED STATES PATENT AND TRADEMARK OFFICE

Commissioner for Patents
United States Patent and Trademark Office
P.O. Box 1450
Alexandria, VA 22313-1450
www.uspto.gov

0 2004

KENNETH L SHERMAN, ESQ
MYERS DAWES ANDRAS & SHERMAN, LLP
19900 MACARTHUR BLVD, 11TH FLOOR
IRVINE CA 92612

In re Application of	:
Graham David Allen	:
Serial No.: 29/176,478	: PETITION DECISION
Filed: February 21, 2003	:
Attorney Docket No.: CEL1.0038	:

This is a decision on applicant's Petition for Revival of Application, which is being treated as a Petition under 37 CFR 1.181 submitted March 10, 2004, to revive an unavoidably abandoned application.

This application became abandoned for failure to respond to the Notice to File Missing Parts of Nonprovisional Application mailed March 21, 2003, which set a two-month statutory period to respond. As no response was received by May 21, 2003, a Notice of Abandonment was mailed February 6, 2004. Applicant then filed this petition.

Applicant has submitted that the response was timely submitted, as evidenced from the copy of the response, which includes a Certificate of Mailing date of May 20, 2003, and a Post Card Receipt received by the Patent Office. While this paper was not matched with the application, it is clear that applicant timely responded to the Office action and the application was abandoned in error.

Applicant's petition is **GRANTED.**

The application will be forwarded to an Examiner for initial examination in due course.

Should there be any questions with respect to this decision, please contact Sandra Morris; by mail addressed to: Director, Technology Center 3700/2900, P.O. Box 1450, Alexandria, VA 22313-1450; or by telephone at (571) 272-2622.

John Kittle
Director, Technology Center 3700/2900

SPE RESPONSE FOR CERTIFICATE OF CORRECTION

Paper No.: X

DATE : December 17, 2007

TO SPE OF : ART UNIT 2914

SUBJECT : Request for Certificate of Correction for Appl. No.: 29/176,574 Patent No.: D497999 S

A response is requested with respect to a request for a certificate of correction.

With respect to the change(s) requested to correct Office and/or Applicant's errors, should the patent read as shown in the certificate of correction attached herewith or the COCIN document(s), in IFW images for the above-identified patented application? No new matter should be introduced, nor should the scope or meaning of the claims be changed.

[redacted]

DO NOT SENT TO ATTORNEY

If the response is for a paper file wrapper, please complete the response and forward the response with the paper file wrapper, to the employee (named below), within 7 days, to:

Certificates of Correction Branch (CofC)
South Tower - 9A22
Palm Location 7580

You can fax the Directors/SPE response to 571-270-9990

LAMONTE NEWSOME

Certificates of Correction Branch
703-308-9390 ext. 112

Thank You For Your Assistance

The request for issuing the above-identified correction(s) is hereby:
Note your decision on the appropriate box.

- ☒ **Approved** — **All** changes apply.
- ☐ **Approved in Part** — Specify below which changes **do not** apply.
- ☐ **Denied** — State the reasons for denial below.

Comments: _____

SPE 2914 1/11/08

PAGE 1/1 * RCVD AT 1/11/2008 11:32:10 AM [Eastern Standard Time] * SVR:USPTO-EFXRF-4/6 * DNIS:2709990 * CSID:703 306 3186 * DURATION (mm-ss):01-06

UNITED STATES PATENT AND TRADEMARK OFFICE

COMMISSIONER FOR PATENTS
UNITED STATES PATENT AND TRADEMARK OFFICE
P.O. BOX 1450
ALEXANDRIA, VA 22313-1450
www.uspto.gov

2005

Mitchell P. Brook
LUCE, FORWARD, HAMILTON & SCRIPPS LLP
Suite 200
11988 El Camino Real
San Diego CA 92130

In re Application of	
Luca Ricci	:
Serial No.: 29/176,584	:
Filed: February 24, 2003	: PETITION DECISION
Attorney Docket No.: 30346-113	:
	:

This is a decision on applicant's petition to revive patent application under 37 CFR 1.137(b), filed on December 2, 2004, to revive an unintentionally abandoned application.

This application became abandoned for failure to timely respond to the Notice of Allowance and Issue fee due mailed July 2, 2004. Applicant filed a Request for Continued Examination (RCE) on July 14, 2004; this request was denied, as RCE's do not apply to design patent applications. Therefore, as a proper response was not filed by October 4, 2004, the application was abandoned; this petition followed.

A grantable petition under 37 CFR 1.137(b), as revised December 1, 1997, requires four items: (1) a petition and petition fee; (2) a complete response if not earlier made; (3) a statement that the entire period of delay in prosecution was unintentional; and (4) a terminal disclaimer and disclaimer fee. The filing of a Continued Prosecution Application (CPA) is considered a proper response. Applicant is advised that as the petition was filed within before the mailing of the Notice of Abandonment, the requirement for a terminal disclaimer was been waived.

Applicant's petition is **GRANTED**.

The $110.00 terminal disclaimer fee will be credited to applicant's Deposit Account 50-2298, as directed.

The application will be forwarded to be processed as a CPA in due course.

Should there be any questions with respect to this decision, please contact Sandra Morris; by mail addressed to: Director, Technology Center 1700/2900, P.O. Box 1450, Alexandria, VA 22313-1450; or by telephone at (571) 272-2622.

Jacqueline Stone
Director, Technology Center 1700/2900

SPE RESPONSE FOR CERTIFICATE OF CORRECTION

Paper No.:20100727

DATE : July 26, 2010

TO SPE OF : ART UNIT 2916

SUBJECT : Request for Certificate of Correction on Patent No.: D569016

A response is requested with respect to the accompanying request for a certificate of correction.

Please complete this form and return with file, within **7** days to:
Certificates of Correction Branch - ST (South Tower) 9A22
Palm location **7590** - Tel. No. (703) 305-8309

With respect to the change(s) requested, correcting Office and/or Applicant's errors, should the patent read as shown in the certificate of correction? No new matter should be introduced, nor should the scope or meaning of the claims be changed.

Thank You For Your Assistance **Certificates of Correction Branch**

The request for issuing the above-identified correction(s) is hereby:

Note your decision on the appropriated box.

☒ **Approved** All changes apply.

☐ **Approved in Part** Specify below which changes **do not** apply.

☐ **Denied** State the reasons for denial below.

Comments:

/Ian Simmons/
Supervisory Patent Examiner.Art Unit 2916

UNITED STATES PATENT AND TRADEMARK OFFICE

COMMISSIONER FOR PATENTS
UNITED STATES PATENT AND TRADEMARK OFFICE
P.O. BOX 1450
ALEXANDRIA, VA 22313-1450
www.uspto.gov

JJGJr: 07-03

Paper No: 4

BIRCH STEWART
KOLASCH & BIRCH
PO BOX 747
FALLS CHURCH VA 22040-0747

COPY MAILED
JUL 0 9 2003
OFFICE OF PETITIONS

In re Application of	:	
Jang, et al.	:	
Application No. 29/176,632	:	DECISION ON PETITION
Filed: 28 May, 2003	:	
Attorney Docket No. 0465-0994P	:	

This is a decision on the petition filed on 28 May, 2003, under 37 C.F.R. §1.181,[1] requesting that the instant application be accorded a filing date of 27 February, 2003, and considered under 37 C.F.R. §1.53.

The petition is **DISMISSED**.

A review of the application file reveals that:

- the instant application was:

  --deposited on 27 February, 2003, as a design patent application, claiming priority

---

[1] The regulations at 37 C.F.R. §1.181 provide, in pertinent part:
§1.181 Petition to the Commissioner.
(a) Petition may be taken to the Commissioner: (1) From any action or requirement of any examiner in the *ex parte* prosecution of an application which is not subject to appeal to the Board of Patent Appeals and Interferences or to the court; (2) In cases in which a statute or the rules specify that the matter is to be determined directly by or reviewed by the Commissioner; and (3) To invoke the supervisory authority of the Commissioner in appropriate circumstances. * * *
(b) Any such petition must contain a statement of the facts involved and the point or points to be reviewed and the action requested. Brief or memoranda, if any, in support thereof should accompany or be embodied in the petition; and where facts are to be proven, the proof in the form of affidavits or declaration (and exhibits, if any) must accompany the petition.
© When a petition is taken from an action or requirement of an examiner in the *ex parte* prosecution of an application, it may be required that there have been a proper request for reconsideration (§1.111) and a repeated action by the examiner. The examiner may be directed by the Commissioner to furnish a written statement, within a specified time, setting forth the reasons for his decision upon the matters averred in the petition, supplying a copy thereof to the petitioner.
(d) Where a fee is required for a petition to the Commissioner the appropriate section of this part will so indicate. If any required fee does not accompany the petition, the petition will be dismissed. * * *
(f) Except as otherwise provided in these rules, any such petition not filed within 2 months from the action complained of, may be dismissed as untimely. The mere filing of a petition will not stay the period for reply to an Examiner's action which may be running against an application, nor act as a stay of other proceedings. * * * (Emphasis supplied.)

to foreign application D2002-24347, Korea, filed on 27 August, 2002;

--filed without an express statement "I/we claim . . . " set forth in the two- (2-) page transmittal, the one- (1-) page specification, any of the seven (7) figures;

- rather:

--the specification, at its outset states that "I/We . . . have devised a new original and ornamental design for . . . " and then identifies the object as the "Kimchi Refrigerator[,]" as illustrated in the seven (7) accompanying figures; and

--the Combined Declaration and Power of Attorney for Patent and Design Applications states that "I hereby declare that . . . I verily believe that I am . . . the original, first and joint inventor . . . of the subject matter which is claimed . . . ";

- the application as submitted also contained a certified copy of the foreign application to which it claimed priority, however the copy appears to be in the Korean language and no translation (certified or not) accompanied that document;

- a Notice of Incomplete Nonprovisional Application (Filing Date Not Granted) was mailed by the Office on 3 April, 2003, indicating that:

--Petitioner had failed to include at least one (1) claim as prescribed by 5 U.S.C. §112,[2] upon filing;

--Petitioner must submit within two (2) months either a petition evidencing the submission of the "omitted item" (the claim) upon original deposit, or the

---

[2] The statute at 5 U.S.C. 112 provides:

35 U.S.C. 112 Specification.

The specification shall contain a written description of the invention, and of the manner and process of making and using it, in such full, clear, concise, and exact terms as to enable any person skilled in the art to which it pertains, or with which it is most nearly connected, to make and use the same, and shall set forth the best mode contemplated by the inventor of carrying out his invention.

The specification shall conclude with one or more claims particularly pointing out and distinctly claiming the subject matter which the applicant regards as his invention.

A claim may be written in independent or, if the nature of the case admits, in dependent or multiple dependent form.

Subject to the following paragraph, a claim in dependent form shall contain a reference to a claim previously set forth and then specify a further limitation of the subject matter claimed. A claim in dependent form shall be construed to incorporate by reference all the limitations of the claim to which it refers.

A claim in multiple dependent form shall contain a reference, in the alternative only, to more than one claim previously set forth and then specify a further limitation of the subject matter claimed. A multiple dependent claim shall not serve as a basis for any other multiple dependent claim. A multiple dependent claim shall be construed to incorporate by reference all the limitations of the particular claim in relation to which it is being considered.

An element in a claim for a combination may be expressed as a means or step for performing a specified function without the recital of structure, material, or acts in support thereof, and such claim shall be construed to cover the corresponding structure, material, or acts described in the specification and equivalents thereof.

(Amended July 24, 1965, Public Law 89-83, sec. 9, 79 Stat. 261; Nov.14, 1975, Public Law 94-131, sec.7, 89 Stat. 691.)

"omitted item" (the claim) with a newly executed oath/declaration with which the application would receive a filing date contemporaneous with that new submission;

--otherwise proceedings would be terminated;

- Petitioner responded on 28 May with:

--a copy of the 3 April, 2003, Notice;

--the instant petition (with fee) contending that "[s]ince the present application was filed with the drawings which constitute the subject matter which is claimed, it would be unduly harsh to not accord the original filing date to he present application simply because the text of the specification did not include the traditional phrase such as 'I claim the ornamental design for _____ (sic) as shown. In the present application, there was never any question about what subject matter was being claimed, since the claimed subject matter is shown by the drawing" (Petition, page 2);

--a Preliminary Amendment including the statement "WE CLAIM: The ornamental design for a kimchi refrigerator as shown" accompanied by an oath/declaration by the Applicants on 15 May, 2003;

- Petitioner argued, *inter alia*, that:

> . . . 5 U.S.C. §112 includes six paragraphs, most of which by their wording cannot apply to design applications, such as multiple dependent claims (Paragraphs 3 and 5), dependent claims further limiting (Paragraph 4) and means-plus-function claims (Paragraph 6). Paragraph 2 states that the specification "shall conclude with one or mor claims." However a design application can only claim one design, and therefore may only include one claim, not "one or more claims[.]" Therefore, unlike utility applications, Paragraph 2 does not completely apply to design applications, and its meaning should be interpreted in light of the peculiar nature of design applications, wherein the drawings themselves constitute the claimed subject matter. Since these drawings were present on the original filing date, Applicants respectfully submit that the present application should be entitled to the original filing date[;] (Petition, page 3)

- and Petitioner contended that:

--" . . . the filing date should be assigned in the absence of this text which is believed to be unnecessary to obtain a filing date in a design application, since on the original date of filing the scope of the claim as defined by the drawings was fixed and clear . . . " (Petition, page 3); and

--" . . . the absence of the textual claim wording at the end of the specification is unnecessary to accord a filing date in a design application, since the claim in a design application is defined by the drawings which were present at the time of filing . . . ." (Petition, page 3-4)

STATUTES, REGULATIONS AND ANALYSIS

Congress has:

- specified the basis for design applications at 5 U.S.C. §171;[3] and
- provided therein that the statutory structure of "patents for inventions [i.e., patents issued on utility applications] shall apply to patents for designs, except as otherwise provided." (Emphasis supplied.)

As set forth above, the guiding statute, 5 U.S.C. §112, states clearly and unequivocally that an application ". . . specification shall conclude with one . . . claim[ ] particularly pointing out and distinctly claiming the subject matter which the applicant regards as his invention." (Emphasis supplied.)

There is no statutory provision that exempts a design application from the requirement that it contain a claim.

Not surprisingly, the regulations at 37 C.F.R. §1.151[4] provide that, in the absence of express exceptions, the rules that apply to utility applications apply to design applications.

---

[3] The statute at 5 U.S.C. 171 provides:
35 U.S.C. 171 Patents for designs.
Whoever invents any new, original, and ornamental design for an article of manufacture may obtain a patent therefor, subject to the conditions and requirements of this title.
The provisions of this title relating to patents for inventions shall apply to patents for designs, except as otherwise provided.

[4] The regulations at 37 C.F.R. §1.151 provide:
§1.151 Rules applicable.
The rules relating to applications for patents for other inventions or discoveries are also applicable to applications for patents for designs except as otherwise provided.

Moreover, the regulations at 37 C.F.R. §1.153[5] require that the single claim allowed in a design application "shall be in formal terms to the ornamental design for the article . . . as shown or as shown and described."

Again, there is no regulatory exemption for a design application from the requirement that it contain a claim.

Finally, the commentary at MPEP §1503.03[6] offers no suggestion that the Office has dispensed with the formal statutory requirements of stating a claim--and, of course, that would not be possible in any case. (See: 37 C.F.R. §1.183.[7])

As noted above, an examination of the record indicates that the application was filed with:

- no claim language in the specification;
- an oath/declaration that states only: "I hereby declare that . . . I verily believe that I am . . . the original, first and joint inventor . . . of the subject matter which is claimed . . . "--but makes no claim to the matter *per se*; and

---

[5] The regulations at 37 C.F.R. §1.153 provide:
§1.153 Title, description and claim, oath or declaration.
(a) The title of the design must designate the particular article. No description, other than a reference to the drawing, is ordinarily required. The claim shall be in formal terms to the ornamental design for the article (specifying name) as shown, or as shown and described. More than one claim is neither required nor permitted.
(b)The oath or declaration required of the applicant must comply with § 1.63.
[24 FR 10332, Dec.22,1959;29 FR 18503, Dec.29, 1964; para.(b),48 FR 2712, Jan. 20, 1983, effective Feb. 27,1983]

[6] The commentary at §1503.03 states:
§1503.03 Design Claim
The requirements for utility claims specified in 37 C.F.R. 1.75 do not apply to design claims. Instead, the form and content of a design claim is set forth in 37 C.F.R. 1.153:
37 C.F.R. §1.153....claim...
(a)...The claim shall be in formal terms to the ornamental design for the article (specifying name)as shown or as shown and described. More than one claim is neither required nor permitted.
*****
A design patent application may only include a single claim. The single claim should normally be in formal terms to "The ornamental design for *(the article which embodies the design or to which it is applied*) as shown." The description of the article in the claim should be consistent in terminology with the title of the invention. See MPEP §1503.01, subsection I. When the specification includes a proper special description of the design (see MPEP §1503.01, subsection II),or a proper showing of modified forms of the design or other descriptive matter has been included in the specification, the words "and described "must be added to the claim following the term "shown ";i.e.,the claim must read "The ornamental design for (*the article which embodies the design or to which it is applied*)as shown and described."
The claimed design is shown by full lines in the drawing. It is not permissible to show any portion of the claimed design in broken lines. There are no portions of the claimed design which are immaterial or unimportant, and elements shown in broken lines in the drawing are not part of the claim. See MPEP §1503.02, subsection III, and *In re Blum*, 374 F.2d 904,153 USPQ 177 (CCPA 1967).

[7] The regulations at 37 C.F.R. §1.183 provide:
§1.183. Suspension of the rules.
In an extraordinary situation, when justice requires, any requirement of the regulations in this part which is not a requirement of the statutes may be suspended or waived by the Commissioner or the Commissioner's designee, *sua sponte*, or on petition of the interested party, subject to such other requirements as may be imposed. Any petition under this section must be accompanied by the petition fee set forth in §1.17(h).
[47 Fed. Reg. 41278, Sept.17, 1982, effective Oct.1,1982] (Emphasis supplied.)

- a certified copy of the foreign priority document--the application filed in Korea--however, it appears that no translation was filed contemporaneously or since.

Petitioner may wish to present within one (1) month from the date of this decision--no extension of time will be available--a renewed petition accompanied by a certified translation of the foreign priority document as evidence of claim language presented on the date of initial deposit that might support a 27 February, 2003, filing date.

Otherwise, Petitioner may accept a 28 May, 2003, filing date supported by the submission on that date of the instant petition and accompanying Preliminary Amendment.

Accordingly, the instant petition is **dismissed**.

Further correspondence with respect to this matter should be addressed as follows:

By mail: (Effective 1 May, 2003)[8]
Commissioner for Patents
P.O. Box 1450
Alexandria, VA 22313-1450

By FAX: (703) 308-6916
ATTN.: Office of Petitions

By hand: Crystal Plaza Four, Suite CP4-3C23
2201 South Clark Place
Arlington, VA 22202

This file will be retained in the Office of Petitions for **one (1) month**, within which Petitioner may file a new petition.

Thereafter, and Petitioner having failed to renew his petition, the application will be forwarded to OIPE for further processing with a filing date of 28 May, 2003, including an indication in Office records that one claim was present upon filing, and then the application will be forwarded for examination in due course.

[8] To determine the appropriate addresses for other subject-specific correspondence, refer to the USPTO Web site at www.uspto.gov.

Telephone inquiries concerning this decision may be directed to the undersigned at (703)305-9199.

John J. Gillon, Jr.
Senior Attorney
Office of Petitions

UNITED STATES PATENT AND TRADEMARK OFFICE

COMMISSIONER FOR PATENTS
UNITED STATES PATENT AND TRADEMARK OFFICE
P.O. BOX 1450
ALEXANDRIA, VA 22313-1450
www.uspto.gov

JJGJr: 09-03

Paper No: 6

BIRCH STEWART
KOLASCH & BIRCH
PO BOX 747
FALLS CHURCH VA 22040-0747

COPY MAILED

SEP 2 5 2003

OFFICE OF PETITIONS

In re Application of	:	
Jang, et al.	:	
Application No. 29/176,632	:	DECISION ON PETITION
Filed: 28 May, 2003	:	
Attorney Docket No. 0465-0994P	:	

This is a decision on the renewed petition filed on 7 August and supplemented via FAX on 23 September, 2003, under 37 C.F.R. §1.181, requesting that the instant application be accorded a filing date of 27 February, 2003, and considered under 37 C.F.R. §1.53.

The petition is **GRANTED**.

A review of the application file reveals that:

- the instant application was deposited on 27 February, 2003, as a design patent application, claiming priority to foreign application D2002-24347, Korea, filed on 27 August, 2002; filed without an express statement "I/we claim . . . " set forth in the two- (2-) page transmittal, the one- (1-) page specification, any of the seven (7) figures; rather, the specification, at its outset states that "I/We . . . have devised a new original and ornamental design for . . . " and then identifies the object as the "Kimchi Refrigerator[,]" as illustrated in the seven (7) accompanying figures; and the Combined Declaration and Power of Attorney for Patent and Design Applications states that "I hereby declare that . . . I verily believe that I am . . . the original, first and joint inventor . . . of the subject matter which is claimed . . . ";

- the application file contained a certified copy of the foreign application to which it claimed priority, however the copy appeared to be in the Korean language and no translation (certified or not) accompanied that document;

- a Notice of Incomplete Nonprovisional Application (Filing Date Not Granted) was mailed by the Office on 3 April, 2003, indicating that: Petitioner had failed to include at least one

(1) claim as prescribed by 5 U.S.C. §112,[1] upon filing; Petitioner must submit within two (2) months either a petition evidencing the submission of the "omitted item" (the claim) upon original deposit, or the "omitted item" (the claim) with a newly executed oath/declaration with which the application would receive a filing date contemporaneous with that new submission; otherwise proceedings would be terminated;

- Petitioner responded on 28 May with a copy of the 3 April, 2003, Notice and:

  --the original petition (with fee) contending that "[s]ince the present application was filed with the drawings which constitute the subject matter which is claimed, it would be unduly harsh to not accord the original filing date to he present application simply because the text of the specification did not include the traditional phrase such as 'I claim the ornamental design for _____ (sic) as shown. In the present application, there was never any question about what subject matter was being claimed, since the claimed subject matter is shown by the drawing" (Petition, page 2); and

  --a Preliminary Amendment including the statement "WE CLAIM: The ornamental design for a kimchi refrigerator as shown" accompanied by an oath/declaration by the Applicants on 15 May, 2003;

- the original petition was dismissed on 9 July, 2003, because the required claim language was not evident on the face of the English-language application;

- the instant petition was:

  --filed with a declaration by Yeon Joo Kang verifying that the English translation

---

[1] The statute at 5 U.S.C. 112 provides:

35 U.S.C. 112 Specification.

The specification shall contain a written description of the invention, and of the manner and process of making and using it, in such full, clear, concise, and exact terms as to enable any person skilled in the art to which it pertains, or with which it is most nearly connected, to make and use the same, and shall set forth the best mode contemplated by the inventor of carrying out his invention.

The specification shall conclude with one or more claims particularly pointing out and distinctly claiming the subject matter which the applicant regards as his invention.

A claim may be written in independent or, if the nature of the case admits, in dependent or multiple dependent form.

Subject to the following paragraph, a claim in dependent form shall contain a reference to a claim previously set forth and then specify a further limitation of the subject matter claimed. A claim in dependent form shall be construed to incorporate by reference all the limitations of the claim to which it refers.

A claim in multiple dependent form shall contain a reference, in the alternative only, to more than one claim previously set forth and then specify a further limitation of the subject matter claimed. A multiple dependent claim shall not serve as a basis for any other multiple dependent claim. A multiple dependent claim shall be construed to incorporate by reference all the limitations of the particular claim in relation to which it is being considered.

An element in a claim for a combination may be expressed as a means or step for performing a specified function without the recital of structure, material, or acts in support thereof, and such claim shall be construed to cover the corresponding structure, material, or acts described in the specification and equivalents thereof.

(Amended July 24, 1965, Public Law 89-83, sec. 9, 79 Stat. 261; Nov.14, 1975, Public Law 94-131, sec.7, 89 Stat. 691.)

is a true translation of the Korean language document (the priority document). This statement is being construed as a statement that the translation is accurate[2] (Petitioner **must** inform the Office if this not a correct interpretation); and

--supplemented on 23 September, 2003, with a copy of the date-stamped receipt card evidencing the presence of the priority document on filing on 27 February, 2003.

STATUTES, REGULATIONS AND ANALYSIS

Congress has specified the basis for design applications at 5 U.S.C. §171;[3] and provided therein that the statutory structure of "patents for inventions [i.e., patents issued on utility applications] shall apply to patents for designs, except as otherwise provided." (Emphasis supplied.)

As set forth above, the guiding statute, 5 U.S.C. §112, states clearly and unequivocally that an application ". . . specification shall conclude with one . . . claim[ ] particularly pointing out and distinctly claiming the subject matter which the applicant regards as his invention." (Emphasis supplied.) There is no statutory provision that exempts a design application from the requirement that it contain a claim. And the regulations at 37 C.F.R. §1.151[4] provide that, in the absence of express exceptions, the rules that apply to utility applications apply to design applications. Moreover, the regulations at 37 C.F.R. §1.153[5] require that the single claim allowed in a design application "shall be in formal terms to the ornamental design for the article .

---

[2] See 37 C.F.R. 1.52(b)(1)(ii).

[3] The statute at 5 U.S.C. 171 provides:
35 U.S.C. 171 Patents for designs.
Whoever invents any new, original, and ornamental design for an article of manufacture may obtain a patent therefor, subject to the conditions and requirements of this title.
The provisions of this title relating to patents for inventions shall apply to patents for designs, except as otherwise provided.

[4] The regulations at 37 C.F.R. §1.151 provide:
§1.151 Rules applicable.
The rules relating to applications for patents for other inventions or discoveries are also applicable to applications for patents for designs except as otherwise provided.

[5] The regulations at 37 C.F.R. §1.153 provide:
§1.153 Title, description and claim, oath or declaration.
(a) The title of the design must designate the particular article. No description, other than a reference to the drawing, is ordinarily required. The claim shall be in formal terms to the ornamental design for the article (specifying name) as shown, or as shown and described. More than one claim is neither required nor permitted.
(b)The oath or declaration required of the applicant must comply with § 1.63.
[24 FR 10332, Dec.22,1959;29 FR 18503, Dec.29, 1964; para.(b),48 FR 2712, Jan. 20, 1983, effective Feb. 27,1983]

. . as shown or as shown and described." Finally, the commentary at MPEP §1503.03[6] offers no suggestion that the Office has dispensed with the formal statutory requirements of stating a claim--and, of course, that would not be possible in any case. (See: 37 C.F.R. §1.183.[7])

As noted above, examination of the record now indicates that:

- while the application was filed with no claim language in the English-language specification and an oath/declaration that states only: "I hereby declare that . . . I verily believe that I am . . . the original, first and joint inventor . . . of the subject matter which is claimed . . . "--but makes no claim to the matter *per se*;

- a certified translation of the certified copy of the foreign priority document--the application filed in Korea--expressly sets forth the statement of the inventors "we claim" as to the design for which the instant application was filed; and

- the stamped receipt card indicates that the foreign priority document containing the claim language was present on deposit/filing on 27 February, 2003, and the Korean language specification has been located in the file.

Accordingly, the petition as considered under 37 C.F.R. §1.53 is **granted**, and the "Notice" mailed on 3 April, 2003, hereby is vacated to the extent that the application was determined incomplete and not accorded a filing date.

The petition fee is not waived because the matter did not arise due to Office error, but rather

---

[6] The commentary at §1503.03 states:

§1503.03 Design Claim

The requirements for utility claims specified in 37 C.F.R. 1.75 do not apply to design claims. Instead, the form and content of a design claim is set forth in 37 C.F.R. 1.153:

37 C.F.R. §1.153....claim...

(a)...The claim shall be in formal terms to the ornamental design for the article (specifying name)as shown or as shown and described. More than one claim is neither required nor permitted.

*****

A design patent application may only include a single claim. The single claim should normally be in formal terms to "The ornamental design for *(the article which embodies the design or to which it is applied*) as shown." The description of the article in the claim should be consistent in terminology with the title of the invention. See MPEP §1503.01, subsection I. When the specification includes a proper special description of the design (see MPEP §1503.01, subsection II),or a proper showing of modified forms of the design or other descriptive matter has been included in the specification, the words "and described "must be added to the claim following the term "shown ";i.e.,the claim must read "The ornamental design for (*the article which embodies the design or to which it is applied*)as shown and described."

The claimed design is shown by full lines in the drawing. It is not permissible to show any portion of the claimed design in broken lines. There are no portions of the claimed design which are immaterial or unimportant, and elements shown in broken lines in the drawing are not part of the claim. See MPEP §1503.02, subsection III, and *In re Blum*, 374 F.2d 904,153 USPQ 177 (CCPA 1967).

[7] The regulations at 37 C.F.R. §1.183 provide:

§1.183. Suspension of the rules.

In an extraordinary situation, when justice requires, any requirement of the regulations in this part which is not a requirement of the statutes may be suspended or waived by the Commissioner or the Commissioner's designee, *sua sponte*, or on petition of the interested party, subject to such other requirements as may be imposed. Any petition under this section must be accompanied by the petition fee set forth in §1.17(h).

[47 Fed. Reg. 41278, Sept.17, 1982, effective Oct.1,1982] (Emphasis supplied.)

because the translation and declaration accompanied neither the application as filed nor the original petition.

This application is being forwarded to the Office of Initial Patent Examination for further processing:

- with a filing date of 27 February, 2003, and
- with an indication on the PALM bib data sheet that one (1) claim was present on filing.

Telephone inquiries concerning this decision may be directed to the undersigned at (703) 305-9199.

John J. Gillon, Jr.
Senior Attorney
Office of Petitions

UNITED STATES PATENT AND TRADEMARK OFFICE

SEP 08 2004

Commissioner for Patents
United States Patent and Trademark Office
P.O. Box 1450
Alexandria, VA 22313-1450
www.uspto.gov

#8

RADER FISHMAN & GRAUER PLLC
LION BUILDING
1233 20TH STREET
WASHINGTON, DC 20036

In re Application of	:
Hiroyuki Taguchi	:
Serial No.: 29/176,756	: PETITION DECISION
Filed: February 28, 2003	:
Attorney Docket No.: SHO-0005	:

This is a decision on applicant's Petition under 37 CFR 1.181 submitted August 6, 2004, to revive an unavoidably abandoned application.

This application became abandoned for failure to respond to the Notice of Allowance and Issue Fee due mailed December 18, 2003, which set a three-month statutory period to respond. As no response was received by March 18, 2004, a Notice of Abandonment was mailed July 29, 2004. Applicant then filed this petition.

Applicant has submitted that a response was timely filed on March 12, 2004, and has submitted copies of the response with a Post Card receipt that show that the response was timely filed and received by the Patent Office. While this response was never associated with the application, it is clear that applicant timely responded to the Office action, and the application was abandoned in error.

Applicant's petition is **GRANTED.**

The application will be promptly forwarded to be processed as a CPA in due course.

Should there be any questions with respect to this decision, please contact Sandra Morris; by mail addressed to: Director, Technology Center 3700/2900, P.O. Box 1450, Alexandria, VA 22313-1450; or by telephone at (571) 272-2622.

John Kittle
Director, Technology Center 3700/2900

UNITED STATES PATENT AND TRADEMARK OFFICE

Commissioner for Patents
United States Patent and Trademark Office
P.O. Box 1450
Alexandria, VA 22313-1450
www.uspto.gov

MEREK, BLACKMON & VOORHEES, LLC
673 SOUTH WASHINGTON STREET
ALEXANDRIA, VA 22314

COPY MAILED

FEB 18 2005

OFFICE OF PETITIONS

In re Application of	:	
Wolfgang Schroeter, et al.	:	
Application No. 29/176,877	:	ON PETITION
Filed: March 3, 2003	:	
Attorney Docket No. DE-29	:	

This is a decision on the petition under 37 CFR 1.137(b), filed November 4, 2004, to revive the above-identified application.

The petition is **DISMISSED**.

Any request for reconsideration of this decision must be submitted within TWO (2) MONTHS from the mail date of this decision. Extensions of time under 37 CFR 1.136(a) are permitted. The reconsideration request should include a cover letter entitled "**Renewed Petition under 37 CFR 1.137(b).**" This is **not** a final agency action within the meaning of 5 U.S.C. § 704.

It is also noted that the petition under 37 CFR 1.28(c), received on November 4, 2004, was intended to be signed by applicant's registered attorney, James J. Merek; however, the petition is not signed. This application cannot be revived until a signed copy of the petition has been submitted.

Further correspondence with respect to this matter should be addressed as follows:

By mail: Mail Stop PETITIONS
Commissioner for Patents
Post Office Box 1450
Alexandria, VA 22313-1450

By hand: Customer Window located at:

Customer Service Window, Mail Stop Petitions
Randolph Building
401 Dulany Street
Alexandria, VA 22314

By fax: (703) 872-9306
ATTN: Office of Petitions

Telephone inquiries concerning this decision should be directed to the undersigned at (571) 272-3229.

Retta Williams

Retta Williams
Petitions Examiner
Office of Petitions
Office of the Deputy Commissioner
for Patent Examination Policy

UNITED STATES PATENT AND TRADEMARK OFFICE

Commissioner for Patents
United States Patent and Trademark Office
P.O. Box 1450
Alexandria, VA 22313-1450
www.uspto.gov

MEREK, BLACKMON & VOORHEES, LLC
673 SOUTH WASHINGTON STREET
ALEXANDRIA, VA 22314

COPY MAILED

FEB 22 2005

OFFICE OF PETITIONS

In re Application of	:	
Wolfgang Schroeter, et al.	:	
Application No. 29/176,877	:	ON PETITION
Filed: March 3, 2003	:	
Attorney Docket No. DE-29	:	

CORRECTED DECISION

This is a decision on the petition under 37 CFR 1.28(c), filed November 4, 2004, to revive the above-identified application.

The petition is **DISMISSED**.

Any request for reconsideration of this decision must be submitted within TWO (2) MONTHS from the mail date of this decision. Extensions of time under 37 CFR 1.136(a) are permitted. The reconsideration request should include a cover letter entitled "**Renewed Petition under 37 CFR 1.137(b).**" This is **not** a final agency action within the meaning of 5 U.S.C. § 704.

It is noted that the petition under 37 CFR 1.28(c), received on November 4, 2004, was intended to be signed by applicant's registered attorney, James J. Merek; however, the petition is not signed. This application cannot be revived until a signed copy of the petition has been submitted.

Further correspondence with respect to this matter should be addressed as follows:

By mail: Mail Stop PETITIONS
Commissioner for Patents
Post Office Box 1450
Alexandria, VA 22313-1450

By hand: Customer Window located at:

Customer Service Window, Mail Stop Petitions
Randolph Building
401 Dulany Street
Alexandria, VA 22314

By fax: (703) 872-9306
ATTN: Office of Petitions

Telephone inquiries concerning this decision should be directed to the undersigned at (571) 272-3229.

Retta Williams

Retta Williams
Petitions Examiner
Office of Petitions
Office of the Deputy Commissioner
for Patent Examination Policy

UNITED STATES PATENT AND TRADEMARK OFFICE

Commissioner for Patents
United States Patent and Trademark Office
P.O. Box 1450
Alexandria, VA 22313-1450
www.uspto.gov

MEREK, BLACKMON & VOORHEES, LLC
673 SOUTH WASHINGTON STREET
ALEXANDRIA, VA 22314

COPY MAILED

JAN 11 2006

OFFICE OF PETITIONS

In re Application of	:	
Wolfgang Schroeter, et al.	:	
Application No. 29/176,877	:	ON PETITION
Filed: March 3, 2003	:	
Attorney Docket No. DE-29	:	

This is a notice regarding your request for acceptance of a fee deficiency submission under 37 CFR 1.28 submitted on November 4, 2004 and renewed on February 22, 2005. On September 1, 1998, the Court of Appeals for the Federal Circuit held that 37 CFR 1.28(c) is the sole provision governing the time for correction of the erroneous payment of the issue fee as a small entity. **See DH Technology v. Synergystex International, Inc. 154 F.3d 1333, 47 USPQ2d 1865 (Fed. Cir. Sept. 1, 1998).**

The Office no longer investigates or rejects original or reissue applications under 37 CFR 1.56. **1098 Off. Gaz. Pat. Office 502 (January 3, 1989)**. Therefore, nothing in this Notice is intended to imply that an investigation was done.

Your fee deficiency submission under 37 CFR 1.28 is hereby **ACCEPTED**.

This application is no longer entitled to small entity status. Accordingly, all future fees paid in this application must be paid at the large entity rate.

Telephone inquiries concerning this decision should be directed to the undersigned at (571) 272-3229.

Retta Williams

Retta Williams
Petitions Examiner
Office of Petitions

UNITED STATES PATENT AND TRADEMARK OFFICE

Commissioner for Patents
United States Patent and Trademark Office
P.O. Box 1450
Alexandria, VA 22313-1450
www.uspto.gov

MEADWESTVACO CORPORATION
LAW DEPARTMENT
4850 D NORTH CHURCH LANE SE
SMYRNA GA 30080

8/15/05

In re Application of
Philippe Lebras
Serial No.: 29/176,928
Filed: February 28, 2003
Attorney Docket No.: D-17010

: PETITION DECISION

This is a decision on applicant's petition to revive patent application under 37 CFR 1.137(b), filed June 28, 2005, to revive an unintentionally abandoned application.

This application became abandoned for failure to respond to the Notice of Allowance mailed January 25, 2005, which set a three-month statutory period to submit the Issue Fee and formal drawings. As no response was received by April 25, 2005, the application was abandoned; applicant then filed this petition.

A grantable petition for a design application under 37 CFR 1.137(b), as revised December 1, 1997, requires four items: (1) a petition and petition fee; (2) a complete response if not earlier made; (3) a statement that the entire period of delay in prosecution was unintentional; and (4) a terminal disclaimer and disclaimer fee. The requirement for a terminal disclaimer has been waived, as the petition was filed before the mailing of the Notice of Abandonment.

Applicant's petition is **GRANTED**.

The application will be forwarded to Publication Division for printing as a patent in due course.

The terminal disclaimer fee of $130.00 will be refunded to applicant's Deposit account 13-2512, as directed.

Should there be any questions with respect to this decision, please contact Sandra Morris; by mail addressed to: Director, Technology Center 1700/2900, P.O. Box 1450, Alexandria, VA 22313-1450; or by telephone at (571) 272-2622.

Jacqueline M. Stone

Jacqueline Stone
Director, Technology Center 1700/2900

UNITED STATES PATENT AND TRADEMARK OFFICE

COMMISSIONER FOR PATENTS
UNITED STATES PATENT AND TRADEMARK OFFICE
P.O. BOX 1450
ALEXANDRIA, VA 22313-1450
www.uspto.gov

Paper No. 7

LEYDIG VOIT & MAYER, LTD
TWO PRUDENTIAL PLAZA, SUITE 4900
180 NORTH STETSON AVENUE
CHICAGO, IL 60601-6780

COPY MAILED

NOV 0 4 2003

OFFICE OF PETITIONS

In re Application of
Wayne Lucht
Application No. 29/176,937
Filed: **February 19, 2003**
Attorney Docket No. 219579

DECISION ON PETITION

This is a decision on the "PETITION TO ACCORD CORRESPONDENCE FILING DATE SHOWN ON EXPRESS MAIL LABEL "DATE-IN" (37 C.F.R. § 1.10(c)," filed April 21, 2003, requesting that the above-identified application be accorded a filing date of February 19, 2003, rather than the presently accorded filing date of February 20, 2003.

Petitioner maintains that on February 19, 2003, the application was deposited as "Express Mail" in the U.S. Postal Service pursuant to 37 C.F.R. § 1.10. In support thereof, applicant submits, *inter alia*, the following documents:

- a true copy of the Design Patent Application Transmittal;
- a true copy of Express Mail mailing label No. EL643486250US; and
- a copy of the return postcard receipt showing that the application papers had been accorded a filing date of February 20, 2003.

Paragraph (a) of 37 CFR 1.10 states that:

> Any correspondence received by the Patent and Trademark Office (Office) that was delivered by the "Express Mail Post Office to Addressee" service of the United States Postal Service (USPS) will be considered filed in the Office on the date of deposit with the USPS. <u>The date of deposit with the USPS is shown by the "date-in" on the "Express Mail" mailing label or other official USPS notation</u>. If the USPS deposit date cannot be determined, the correspondence will be accorded the Office receipt date as the filing date. See §1.6(a).
>
> (Emphasis supplied).

Paragraph (c) of 37 CFR 1.10 states that:

> Any person filing correspondence under this section that was received by the Office and delivered by the "Express Mail Post Office to Addressee" service of the USPS, who can show

that there is a discrepancy between the filing date accorded by the Office to the correspondence and the date of deposit as shown by the "date-in" on the "Express Mail" mailing label or other official USPS notation, may petition the Commissioner to accord the correspondence a filing date as of the "date-in" on the "Express Mail" mailing label or other official USPS notation, provided that:

(1) The petition is filed promptly after the person becomes aware that the Office has accorded, or will accord, a filing date other than the USPS deposit date;

(2) The number of the "Express Mail" mailing label was placed on the paper(s) or fee(s) that constitute the correspondence prior to the original mailing by "Express Mail;" and

(3) The petition includes a true copy of the "Express Mail" mailing label showing the "date-in," and of any other official notation by the USPS relied upon to show the date of deposit.

The instant petition was filed promptly within the meaning of § 1.10(c)(1). The application transmittal submitted on petition is a true copy of the transmittal received on filing of this application; itemizes the papers being filed in this application; and bears the "Express Mail" mailing label number "EL643486250US" thereon. Thus, petitioner has shown that the number of the Express Mail mailing label was placed on the correspondence prior to the original mailing by Express Mail.

The Express Mail mailing label No. EL643486250US bears both a handwritten date-in of February 19, 2003.

In view thereof, the petition is GRANTED.

No petition fee is required.

It is acknowledged that in response to the Notice of Omitted Item(s) in a Nonprovisional Application mailed April 7, 2003, applicant has filed an amendment. The examiner will consider this "request for approval of drawing amendments" in due course.

This design application is being forwarded to the Office of Initial Patent Examination (OIPE) for **correction of the filing date to February 19, 2003** and **mailing of a corrected filing receipt**.

Telephone inquires related to this decision may be directed to the undersigned at (703) 305-0309.

Nancy Johnson
Senior Petitions Attorney
Office of Petitions

SPE RESPONSE FOR CERTIFICATE OF CORRECTION

Paper No.: _____

DATE : 2/1/05

TO SPE OF : ART UNIT 2912

SUBJECT : Request for Certificate of Correction on Patent No.: D494605

A response is requested with respect to the accompanying request for a certificate of correction.

Please complete this form and return with file, within 7 days to:
Certificates of Correction Branch - PK 3-915
Palm location 7580 - Tel. No. 305-8309

With respect to the change(s) requested, correcting Office and/or Applicant's errors, should the patent read as shown in the certificate of correction? No new matter should be introduced, nor should the scope or meaning of the claims be changed.

See Attached Post Cert Receipts

Thank You For Your Assistance

Certificates of Correction Branch

The request for issuing the above-identified correction(s) is hereby:
Note your decision on the appropriate box.

- ☑ **Approved** — All changes apply.
- ☐ **Approved in Part** — Specify below which changes do not apply.
- ☐ **Denied** — State the reasons for denial below.

Comments:

STELLA REID
SUPERVISORY DESIGN EXAMINER

2912

SPE

Art Unit

PTOL-306 (REV. 7/03)

U.S. DEPARTMENT OF COMMERCE Patent and Trademark Offic

UNITED STATES PATENT AND TRADEMARK OFFICE

COMMISSIONER FOR PATENTS
UNITED STATES PATENT AND TRADEMARK OFFICE
P.O. BOX 1450
ALEXANDRIA, VA 22313-1450
WWW.USPTO.GOV

Paper No. 5

C/O CELINE JIMENEZ CROWSON
HOGAN & HARTSON
555 13TH STREET, N.W.
WASHINGTON, DC 20004

COPY MAILED

JUN 3 0 2003

OFFICE OF PETITIONS

In re Application of	:	
Francesco Ranzoni	:	
Application No. 29/177,130	:	NOTICE
Filed: March 5, 2003	:	
Attorney Docket No. 82062-0041	:	

This is a notice regarding your request for acceptance of a fee deficiency submission under 37 CFR 1.28. On September 1, 1998, the Court of Appeals for the Federal Circuit held that 37 CFR 1.28(c) is the sole provision governing the time for correction of the erroneous payment of the issue fee as a small entity. **See DH Technology v. Synergystex International, Inc. 154 F.3d 1333, 47 USPQ2d 1865 (Fed. Cir. Sept. 1, 1998).**

The Office no longer investigates or rejects original or reissue applications under 37 CFR 1.56. **1098 Off. Gaz. Pat. Office 502 (January 3, 1989).** Therefore, nothing in this Notice is intended to imply that an investigation was done.

Your fee deficiency submission under 37 CFR 1.28 is hereby **ACCEPTED.**

Inquiries related to this communication should be directed to the Office of Petitions Staff at (703) 305-9285.

This file is being forwarded to the Office of Initial Patent Examination.

Wan Laymon
Petitions Examiner
Office of Petitions
Office of the Deputy Commissioner
for Patent Examination Policy

UNITED STATES PATENT AND TRADEMARK OFFICE

COMMISSIONER FOR PATENTS
UNITED STATES PATENT AND TRADEMARK OFFICE
P.O. BOX 1450
ALEXANDRIA, VA 22313-1450
www.uspto.gov

KENNETH A NELSON
BRYAN CAVE LLP
SUITE 2200
TWO NORTH CENTRAL AVENUE
PHOENIX, AZ 85004-4406

MAR 25 2005

In re Application of
Saharut Sirichai
Serial No.: 29/177,153
Filed: March 3, 2003
Attorney Docket No.: 0134454-02

: PETITION DECISION

This is a decision on applicant's petition to revive patent application under 37 CFR 1.137(b), received January 7, 2005, to revive an unintentionally abandoned application.

This application became abandoned for failure to respond to the Notice of Allowance mailed September 16, 2004, which set a three-month statutory period to submit the Issue Fee. As no response was received by December 16, 2004, the application was abandoned; this petition followed.

A grantable petition for a design application under 37 CFR 1.137(b), as revised December 1, 1997, requires four items: (1) a petition and petition fee; (2) a complete response if not earlier made; (3) a statement that the entire period of delay in prosecution was unintentional; and (4) a terminal disclaimer and disclaimer fee. The requirement for filing a terminal disclaimer has been waived, as the Petition was filed before the mailing of the Notice of Abandonment.

Applicant's petition is **GRANTED**.

The Petition fee of $1500.00 and the Issue Fee of $800.00 will be charged to applicant's Deposit Account 02-4467, as directed; the Terminal Disclaimer fee will not be charged.

The application will be forwarded to Publication Division for printing as a patent in due course.

Should there be any questions with respect to this decision, please contact Sandra Morris; by mail addressed to: Director, Technology Center 1700/2900, P.O. Box 1450, Alexandria, VA 22313-1450; or by telephone at (571) 272-2622.

JMStone

Jacqueline Stone
Director, Technology Center 1700/2900

UNITED STATES PATENT AND TRADEMARK OFFICE

Commissioner for Patents
United States Patent and Trademark Office
P.O. Box 1450
Alexandria, VA 22313-1450
www.uspto.gov

LEWIS RICE & FINGERSH
ATTN: BOX IP DEPT.
500 NORTH BROADWAY
SUITE 2000
ST LOUIS, MO 63102

COPY MAILED

JUN 0 8 2004

OFFICE OF PETITIONS

In re Application of	:	
Jeffrey J. Mullins	:	
Application No. 29/177,328	:	NOTICE
Filed: March 7, 2003	:	
Attorney Docket No. 26/1222D	:	

This is a notice regarding your request for acceptance of a fee deficiency submission under 37 CFR 1.28. On September 1, 1998, the Court of Appeals for the Federal Circuit held that 37 CFR 1.28(c) is the sole provision governing the time for correction of the erroneous payment of the issue fee as a small entity. **See DH Technology v. Synergystex International, Inc. 154 F.3d 1333, 47 USPQ2d 1865 (Fed. Cir. Sept. 1, 1998).**

The Office no longer investigates or rejects original or reissue applications under 37 CFR 1.56. **1098 Off. Gaz. Pat. Office 502 (January 3, 1989).** Therefore, nothing in this Notice is intended to imply that an investigation was done.

Your fee deficiency submission under 37 CFR 1.28 is hereby **ACCEPTED**.

Inquiries related to this communication should be directed to the Office of Petitions Staff at (703) 305-9285.

This file is being forwarded to Technology Center AU 2914.

Wan Laymon
Petitions Examiner
Office of Petitions
Office of the Deputy Commissioner
for Patent Examination Policy

UNITED STATES PATENT AND TRADEMARK OFFICE

Commissioner for Patents
United States Patent and Trademark Office
P.O. Box 1450
Alexandria, VA 22313-1450
www.uspto.gov

JJGJR.: 09-07

Paper No: __

COPY MAILED

SEP 2 4 2007

OFFICE OF PETITIONS

LYLE GUFFEY
STE C
3001 NORTHRIDGE
FARMINGTON NM 87401

In re Application of	:	
Guffey, et al.	:	DECISION
Application No.: 29/177,343	:	
Filing Date: 7 March, 2003	:	
Attorney Docket No. (None)/Guffey1	:	

This is a decision on the letters considered as petitions filed on 19 May and 24 October, 2005, with apparent supplement on 25 May, 2007, and considered as a request to withdraw the holding of abandonment under 37 C.F.R. §1.181, and the reference on 25 May, 2007, to a petition under 37 C.F.R. §1.137(b) to revive an application abandoned due to unintentional delay.

The Office regrets the delay in addressing this matter, however, the instant petition was presented to the attorneys in the Office of Petitions only at this writing.[1]

The petition as considered under 37 C.F.R. §1.181 is **DISMISSED** and the petition as considered under 37 C.F.R. §1.137(b) is **DISMISSED**.

NOTES:

(1) Any petition (and fee) for reconsideration of this decision must be

[1] **NOTE: Monitoring of the status of applications on PAIR can inform one's management of application responses and provide an indication when mailings of Office actions should be expected. Status Inquiries filed at three (3) or four (4) month intervals provide a demonstration of diligence and attention in supporting a petition seeking relief under 37 C.F.R. §1.181.**

submitted within two (2) months from the mail date of this decision. Extensions of time under 37 C.F.R. §1.136(a) are permitted. The reconsideration request should include a cover letter entitled "Renewed Petition under 37 C.F.R. §1.181."

(If Petitioner is unable to present even a satisfactory showing to support a petition under 37 C.F.R. §1.137(a), and Petitioner's only alternative will be to file a petition under 37 C.F.R. §1.137(b).)

(2) Thereafter, there will be no further reconsideration of this matter.[2]

There is no indication that Mr. Becker (who has filed a change of address (instead of the requisite revocation/power of attorney executed by both named inventors) and a Terminal Disclaimer (for which he apparently is not yet empowered)) ever was empowered to prosecute the instant application. If Petitioner desires to receive future correspondence regarding this application, the appropriate power of attorney documentation must be submitted. A courtesy copy of this decision will be mailed to Petitioner. However, all future correspondence will be directed to the address of record until such time as appropriate instructions are received to the contrary.

BACKGROUND

The record reflects that:

- Petitioner failed to reply timely and properly to the Drawings Requirement of the Notice of Allowance/Allowability and Fees Due (copy enclosed) mailed on 11 August, 2004, with reply due under a non-extendable deadline on or before 12 November, 2004;
- the application went abandoned by operation of law after midnight 12 November, 2004;
- Petitioner replied to an 18 November, 2004, Notice of Additional Fees Due ($5.00) on 17 December, 2004–notably, however, Petitioner apparently failed to avail himself of the certificate of mailing provisions of 37 C.F.R. §1.8 and Petitioner is cautioned in this regard;

---

[2] For more than a century, punctuality and due diligence, equally with good faith, have been deemed essential requisites to the success of those who seek to obtain the special privileges of the patent law, and they are demanded in the interest of the public and for the protection of rival inventors. See: Porter v. Louden, 7 App.D.C. 64 (C.A.D.C. 1895), citing Wollensak v. Sargent, 151 U.S. 221, 228, 38 L. Ed. 137, 14 S. Ct. 291 (1894). An invention benefits no one unless it is made public, and the rule of diligence should be so applied as to encourage reasonable promptness in conferring this benefit upon the public. Automatic Electric Co. v. Dyson, 52 App. D.C. 82; 281 F. 586 (C.A.D.C. 1922). Generally, 35 U.S.C. §6; 37 C.F.R.§§1.181, 182, 183.

- an Office computation of 24 December, 2004, incorrectly calculated the fees as those for a not-small entity, but it does not appear that a Notice was mailed in this regard;

- the Office mailed a Notice of Abandonment as to the drawings requirement on 18 February, 2005;

- on 19 May and 24 October, 2005, Petitioner (co-inventor Guffey) filed the instant letters considered as a petition with, *inter alia*, an averment that he complied with the requirements associated with the Notice of Allowance/Allowability and Fees Due, however, he appears not to appreciate the focus of the Notice of Abandonment is the drawings requirement, further, Petitioner failed to file timely and to make the statements and provide all of the documentation required under the guidance at MPEP §711.03(c), discussed below;

- the filing of 25 May, 2007, provides a reply in the form of drawings and a petition fee and refers to a petition to revive, but not only does it fail to provide a statement of unintentional delay signed by one or both of the applicants–who were the only parties capable of making the statement–but also fails to include the petition, in that an actual petition is not in evidence in the file.

Notably, the availability of applications and application papers online to applicants/practitioners who diligently associate their Customer Number with the respective application(s) now provides an applicant/practitioner immediate and on-demand information as to events/transactions in an application. Thus, now if one wishes to know the progress in and/or status of an application or the accuracy of the data therein, one need only look at the file online.

Out of an abundance of caution, Petitioners always are reminded that the filing of a petition under 37 C.F.R. §1.181 does not toll any periods that may be running any action by the Office and a petition seeking relief under the regulation must be filed within two (2) months of the act complained of (see: 37 C.F.R. §1.181(f)); and those registered to practice *and* all others who make representations before the Office must inquire into the underlying facts of representations made to the Office and support averments with the appropriate documentation–since all owe to the Office the continuing duty to disclose.[3]

---

[3] See supplement of 17 June, 1999. The Patent and Trademark Office is relying on petitioner's duty of candor and good faith and accepting a statement made by Petitioner. See Changes to Patent Practice and Procedure, 62 Fed. Reg. at 53160 and 53178, 1203 Off. Gaz. Pat. Office at 88 and 103 (responses to comments 64 and 109)(applicant obligated under 37 C.F.R. §10.18 to inquire into the underlying facts and circumstances when providing statements to the Patent and Trademark Office).

Specifically, the regulations at 37 C.F.R. §10.18 provide:

§ 10.18 Signature and certificate for correspondence filed in the Patent and Trademark Office.
(a) For all documents filed in the Office in patent, trademark, and other non-patent matters, except for correspondence that is required to be

STATUTES, REGULATIONS AND ANALYSIS

Congress has authorized the Commissioner to "revive an application if the delay is shown to the satisfaction of the Commissioner to have been "unavoidable." 35 U.S.C. §133 (1994).[4]

The regulations at 37 C.F.R. §1.137(a) and (b) set forth the requirements for a petitioner to revive a previously unavoidably or unintentionally, respectively, abandoned application under this congressional grant of authority. The language of 35 U.S.C. §133 and 37 C.F.R. §1.137(a) is clear, unambiguous, and without qualification: the delay in tendering the reply to the outstanding Office action, as well as filing the first petition seeking revival, must have been unavoidable for the reply now to be accepted on petition.[5]

---

signed by the applicant or party, each piece of correspondence filed by a practitioner in the Patent and Trademark Office must bear a signature by such practitioner complying with the provisions of §1.4(d), §1.4(e), or § 2.193(c)(1) of this chapter.
(b) By presenting to the Office (whether by signing, filing, submitting, or later advocating) any paper, the party presenting such paper, whether a practitioner or non-practitioner, is certifying that—

(1) All statements made therein of the party's own knowledge are true, all statements made therein on information and belief are believed to be true, and all statements made therein are made with the knowledge that whoever, in any matter within the jurisdiction of the Patent and Trademark Office, knowingly and willfully falsifies, conceals, or covers up by any trick, scheme, or device a material fact, or makes any false, fictitious or fraudulent statements or representations, or makes or uses any false writing or document knowing the same to contain any false, fictitious or fraudulent statement or entry, shall be subject to the penalties set forth under 18 U.S.C. 1001, and that violations of this paragraph may jeopardize the validity of the application or document, or the validity or enforceability of any patent, trademark registration, or certificate resulting therefrom; and

(2) To the best of the party's knowledge, information and belief, formed after an inquiry reasonable under the circumstances, that —

(i) The paper is not being presented for any improper purpose, such as to harass someone or to cause unnecessary delay or needless increase in the cost of prosecution before the Office;

(ii) The claims and other legal contentions therein are warranted by existing law or by a nonfrivolous argument for the extension, modification, or reversal of existing law or the establishment of new law;

(iii) The allegations and other factual contentions have evidentiary support or, if specifically so identified, are likely to have evidentiary support after a reasonable opportunity for further investigation or discovery; and

(iv) The denials of factual contentions are warranted on the evidence, or if specifically so identified, are reasonably based on a lack of information or belief.

(c) Violations of paragraph (b)(1) of this section by a practitioner or non-practitioner may jeopardize the validity of the application or document, or the validity or enforceability of any patent, trademark registration, or certificate resulting therefrom. Violations of any of paragraphs (b)(2)(i) through (iv) of this section are, after notice and reasonable opportunity to respond, subject to such sanctions as deemed appropriate by the Commissioner, or the Commissioner's designee, which may include, but are not limited to, any combination of —

(1) Holding certain facts to have been established;
(2) Returning papers;
(3) Precluding a party from filing a paper, or presenting or contesting an issue;
(4) Imposing a monetary sanction;
(5) Requiring a terminal disclaimer for the period of the delay; or
(6) Terminating the proceedings in the Patent and Trademark Office.

(d) Any practitioner violating the provisions of this section may also be subject to disciplinary action. See § 10.23(c)(15).
[Added 50 FR 5175, Feb. 6, 1985, effective Mar. 8, 1985; para. (a) revised, 58 FR 54494, Oct. 22, 1993, effective Nov. 22, 1993; paras. (a) & (b) revised, paras. (c) & (d) added, 62 FR 53131, Oct. 10, 1997, effective Dec. 1, 1997; para. (a) revised, 69 FR 56481, Sept. 21, 2004, effective Oct. 21, 2004]

[4] 35 U.S.C. §133 provides:
35 U.S.C. §133 Time for prosecuting application.
Upon failure of the applicant to prosecute the application within six months after any action therein, of which notice has been given or mailed to the applicant, or within such shorter time, not less than thirty days, as fixed by the Commissioner in such action, the application shall be regarded as abandoned by the parties thereto, unless it be shown to the satisfaction of the Commissioner that such delay was unavoidable.

[5] Therefore, by example, an unavoidable delay in the payment of the Filing Fee might occur if a reply is shipped by the US Postal Service, but due to catastrophic accident, the delivery is not made.

Delays in responding properly raise the question whether delays are unavoidable.[6] Where there is a question whether the delay was unavoidable, Petitioners must meet the burden of establishing that the delay was unavoidable within the meaning of 35 U.S.C. §133 and 37 C.F.R. §1.137(a).[7]

And the Petitioner must be diligent in attending to the matter.[8] Failure to do so does not constitute the care required under Pratt, and so cannot satisfy the test for diligence and due care.

(By contrast, unintentional delays are those that do not satisfy the very strict statutory and regulatory requirements of unavoidable delay, and also, by definition, are not intentional.[9]))

Allegations as to the Request to
Withdraw the Holding of Abandonment

The courts have determined the construct for properly supporting a petition seeking withdrawal of a holding of abandonment.[10]

The commentary at MPEP §711.03(c) provides:

* * *

A. Petition To Withdraw Holding of Abandonment Based on Failure To Receive Office Action

In *Delgar v. Schulyer*, 172 USPQ 513 (D.D.C. 1971), the court decided that the Office should mail a new Notice of Allowance in view of the evidence presented in support of the contention that the applicant's representative did not receive the original Notice of Allowance. Under the reasoning of *Delgar*, an allegation that an Office action was never received may be considered in a petition to withdraw the holding of abandonment. If adequately supported, the Office may grant the petition to withdraw the holding of abandonment and remail the Office action. That is, the reasoning of *Delgar* is applicable regardless of whether an application

---

[6] See: *Changes to Patent Practice and Procedure; Final Rule Notice*, 62 *Fed. Reg.* at 53158-59 (October 10, 1997), 1203 *Off. Gaz. Pat. Office* at 86-87 (October 21, 1997).

[7] See: In re Application of G, 11 USPQ2d 1378, 1380 (Comm'r Pats. 1989).

[8] See: Diligence in Filing Petitions to Revive and Petitions to Withdraw the Holding of Abandonment, 1124 Off. Gaz. Pat. Office 33 (March 19, 1991). It was and is Petitioner's burden to exercise diligence in seeking either to have the holding of abandonment withdrawn or the application revived. See 1124 Off. Gaz. Pat. Office supra.

[9] Therefore, by example, an unintentional delay in the reply might occur if the reply and transmittal form are to be prepared for shipment by the US Postal Service, but other pressing matters distract one's attention and the mail is not timely deposited for shipment.

[10] See: Delgar v. Schulyer, 172 USPQ 513 (D.D.C. 1971).

is held abandoned for failure to timely pay the issue fee (35 U.S.C. 151) or for failure to prosecute (35 U.S.C. 133). To minimize costs and burdens to practitioners and the Office, the Office has modified the showing required to establish nonreceipt of an Office action. The showing required to establish nonreceipt of an Office communication must include a statement from the practitioner stating that the Office communication was not received by the practitioner and attesting to the fact that a search of the file jacket and docket records indicates that the Office communication was not received. A copy of the docket record where the nonreceived Office communication would have been entered had it been received and docketed must be attached to and referenced in practitioner's statement. For example, if a three month period for reply was set in the nonreceived Office action, a copy of the docket report showing all replies docketed for a date three months from the mail date of the nonreceived Office action must be submitted as documentary proof of nonreceipt of the Office action.

* **

The showing outlined above may not be sufficient if there are circumstances that point to a conclusion that the Office action may have been lost after receipt rather than a conclusion that the Office action was lost in the mail (e.g., if the practitioner has a history of not receiving Office actions).

Evidence of nonreceipt of an Office communication or action (e.g., Notice of Abandonment or an advisory action) other than that action to which reply was required to avoid abandonment would not warrant withdrawal of the holding of abandonment. Abandonment takes place by operation of law for failure to reply to an Office action or timely pay the issue fee, not by operation of the mailing of a Notice of Abandonment. See *Lorenz v. Finkl*, 333 F.2d 885, 889-90, 142 USPQ 26, 29-30 (CCPA 1964); *Krahn v. Commissioner*, 15 USPQ2d 1823, 1824 (E.D. Va 1990); *In re Application of Fischer*, 6 USPQ2d 1573, 1574 (Comm'r Pat. 1988). (Emphasis supplied.)

* * *

The commentary at MPEP §711.03(c) further provides:

* * *

B. Petition To Withdraw Holding of Abandonment Based on Evidence That a Reply Was Timely Mailed or Filed

37 C.F.R. §1.10(c) through §1.10(e) and §1.10(g) set forth procedures for petitioning the Director of the USPTO to accord a filing date to correspondence as of the date of deposit of the

correspondence as "Express Mail." A petition to withdraw the holding of abandonment relying upon a timely reply placed in "Express Mail" must include an appropriate petition under 37 C.F.R. §1.10(c), (d), * (e), or (g) (see MPEP § 513). When a paper is shown to have been mailed to the Office using the "Express Mail" procedures, the paper must be entered in PALM with the "Express Mail" date.

Similarly, applicants may establish that a reply was filed with a postcard receipt that properly identifies the reply and provides *prima facie* evidence that the reply was timely filed. See MPEP § 503. For example, if the application has been held abandoned for failure to file a reply to a first Office action, and applicant has a postcard receipt showing that an amendment was timely filed in response to the Office action, then the holding of abandonment should be withdrawn upon the filing of a petition to withdraw the holding of abandonment. When the reply is shown to have been timely filed based on a postcard receipt, the reply must be entered into PALM using the date of receipt of the reply as shown on the post card receipt.

Where a certificate of mailing under 37 C.F.R. §1.8, but not a postcard receipt, is relied upon in a petition to withdraw the holding of abandonment, see 37 C.F.R. §1.8(b) and MPEP § 512. As stated in 37 C.F.R §1.8(b)(3) the statement that attests to the previous timely mailing or transmission of the correspondence must be on a personal knowledge basis, or to the satisfaction of the Director of the USPTO. If the statement attesting to the previous timely mailing is not made by the person who signed the Certificate of Mailing (i.e., there is no personal knowledge basis), then the statement attesting to the previous timely mailing should include evidence that supports the conclusion that the correspondence was actually mailed (e.g., copies of a mailing log establishing that correspondence was mailed for that application). When the correspondence is shown to have been timely filed based on a certificate of mailing, the correspondence is entered into PALM with the actual date of receipt (i.e., the date that the duplicate copy of the papers was filed with the statement under 37 C.F.R. §1.8).

37 C.F.R. §1.8(b) also permits applicant to notify the Office of a previous mailing or transmission of correspondence and submit a

> statement under 37 C.F.R. 1.8(b)(3) accompanied by a duplicate copy of the correspondence when a reasonable amount of time (e.g., more than one month) has elapsed from the time of mailing or transmitting of the correspondence. Applicant does not have to wait until the application becomes abandoned before notifying the Office of the previous mailing or transmission of the correspondence. Applicant should check the private Patent Application Information Retrieval (PAIR) system for the status of the correspondence before notifying the Office. See MPEP § 512.
>
> * * *

Moreover, the regulation places upon Petitioner a diligence requirement to seek relief within two (2) months of the act complained of.

It appears that Petitioner has not satisfied the showing timing requirements herein.

Allegations as to
Unintentional Delay

The requirements for a grantable petition under 37 C.F.R. §1.137(b) are the petition and fee, a statement/showing of unintentional delay, a proper reply, and–where appropriate--a terminal disclaimer and fee.

Petitioner appears not to have satisfied the "petition" and "statement" requirements under the regulation.

CONCLUSION

Because it appears that Petitioner has not satisfied the burdens herein, the petition as considered under 37 C.F.R. §1.181 is **dismissed**, and the petition under 37 C.F.R. §1.137(b) is **dismissed**.

Petitioner may wish to file a petition to the Commissioner requesting revival of an application abandoned due to unintentional delay under 37 C.F.R. §1.137(b). (See: http://www.uspto.gov/web/offices/pac/mpep/documents/0700_711_03_c.htm#sect711.03c)[11]

A petition to revive on the grounds of unintentional delay must be filed promptly and such petition must be accompanied by the reply (the amendment), the petition fee, and a statement that

[11] See fee schedule: http://www.uspto.gov/main/howtofees.htm

"the entire delay in filing the required reply from the due date for the reply until the filing of a grantable petition was unintentional." (The statement is in the form available online–and must be signed by parties able to make such a statement.)

Further correspondence with respect to this matter should be addressed as follows:[12]

By mail: Commissioner for Patents[13]
P.O. Box 1450
Alexandria, VA 22313-1450

By FAX: IFW Formal Filings
(571) 273-8300
ATTN.: Office of Petitions

By hand: Mail Stop: Petition
Customer Service Window
Randolph Building
401 Dulany Street
Alexandria, VA 22314

[12] On July 15, 2005, the Central Facsimile (FAX) Number changed to (571) 273-8300. The old FAX number no longer is in service and (571) 273-8300 will be the only facsimile number recognized for centralized delivery. (For further information. see: http://www.uspto.gov/web/offices/pac/dapp/opla/preognotice/cfax062005.pdf .)

[13] To determine the appropriate addresses for other subject-specific correspondence, refer to the USPTO Web site at www.uspto.gov.

While telephone inquiries regarding this decision may be directed to the undersigned at (571) 272-3214, it is noted that all practice before the Office is in writing (see: 37 C.F.R. §1.2[14]) and the proper authority for action on any matter in this regard are the statutes (35 U.S.C.), regulations (37 C.F.R.) and the commentary on policy (MPEP). Therefore, no telephone discussion may be controlling or considered authority for Petitioner's action(s).

John J. Gillon, Jr.
Senior Attorney
Office of Petitions
Encl:
11 August, 2004, Notice of Allowance/Allowability and Fees Due
cc:
ROBERT W. BECKER
707 STATE HWY. 333/STE. B
TIJERAS, NM 87059-7507

[14] The regulations at 37 C.F.R. §1.2 provide:
§1.2 Business to be transacted in writing.
All business with the Patent and Trademark Office should be transacted in writing.The personal attendance of applicants or their attorneys or agents at the Patent and Trademark Office is unnecessary. The action of the Patent and Trademark Office will be based exclusively on the written record in the Office. No attention will be paid to any alleged oral promise, stipulation,or understanding in relation to which there is disagreement or doubt.

UNITED STATES PATENT AND TRADEMARK OFFICE

UNITED STATES DEPARTMENT OF COMMERCE
United States Patent and Trademark Office
Address: COMMISSIONER FOR PATENTS
P.O. Box 1450
Alexandria, Virginia 22313-1450
www.uspto.gov

NOTICE OF ALLOWANCE AND FEE(S) DUE

7590 08/11/2004

Lyle Guffey
Ste C
3001 Northridge
Farmington, NM 87401

EXAMINER
BUI, DANIEL

ART UNIT	PAPER NUMBER
2912	

DATE MAILED: 08/11/2004

APPLICATION NO.	FILING DATE	FIRST NAMED INVENTOR	ATTORNEY DOCKET NO.	CONFIRMATION NO.
29/177,343	03/07/2003	Lyle Guffey		1685

TITLE OF INVENTION: HAT STORAGE AND DISPLAY DEVICE

APPLN. TYPE	SMALL ENTITY	ISSUE FEE	PUBLICATION FEE	TOTAL FEE(S) DUE	DATE DUE
nonprovisional	YES	$240	$0	$240	11/12/2004

THE APPLICATION IDENTIFIED ABOVE HAS BEEN EXAMINED AND IS ALLOWED FOR ISSUANCE AS A PATEN PROSECUTION ON THE MERITS IS CLOSED. THIS NOTICE OF ALLOWANCE IS NOT A GRANT OF PATENT RIGHT THIS APPLICATION IS SUBJECT TO WITHDRAWAL FROM ISSUE AT THE INITIATIVE OF THE OFFICE OR UPO PETITION BY THE APPLICANT. SEE 37 CFR 1.313 AND MPEP 1308.

THE ISSUE FEE AND PUBLICATION FEE (IF REQUIRED) MUST BE PAID WITHIN THREE MONTHS FROM TH MAILING DATE OF THIS NOTICE OR THIS APPLICATION SHALL BE REGARDED AS ABANDONED. TH STATUTORY PERIOD CANNOT BE EXTENDED. SEE 35 U.S.C. 151. THE ISSUE FEE DUE INDICATED ABOV REFLECTS A CREDIT FOR ANY PREVIOUSLY PAID ISSUE FEE APPLIED IN THIS APPLICATION. THE PTOL-85B (O AN EQUIVALENT) MUST BE RETURNED WITHIN THIS PERIOD EVEN IF NO FEE IS DUE OR THE APPLICATION WIL BE REGARDED AS ABANDONED.

HOW TO REPLY TO THIS NOTICE:

I. Review the SMALL ENTITY status shown above.

If the SMALL ENTITY is shown as YES, verify your current SMALL ENTITY status:

A. If the status is the same, pay the TOTAL FEE(S) DUE shown above.

B. If the status above is to be removed, check box 5b on Part B - Fee(s) Transmittal and pay the PUBLICATION FEE (if required) and twice the amount of the ISSUE FEE shown above, or

If the SMALL ENTITY is shown as NO:

A. Pay TOTAL FEE(S) DUE shown above, or

B. If applicant claimed SMALL ENTITY status before, or is n claiming SMALL ENTITY status, check box 5a on Part B - Fee Transmittal and pay the PUBLICATION FEE (if required) and 1 the ISSUE FEE shown above.

II. PART B - FEE(S) TRANSMITTAL should be completed and returned to the United States Patent and Trademark Office (USPTO) w your ISSUE FEE and PUBLICATION FEE (if required). Even if the fee(s) have already been paid, Part B - Fee(s) Transmittal should completed and returned. If you are charging the fee(s) to your deposit account, section "4b" of Part B - Fee(s) Transmittal should completed and an extra copy of the form should be submitted.

III. All communications regarding this application must give the application number. Please direct all communications prior to issuance Mail Stop ISSUE FEE unless advised to the contrary.

IMPORTANT REMINDER: Utility patents issuing on applications filed on or after Dec. 12, 1980 may require payment maintenance fees. It is patentee's responsibility to ensure timely payment of maintenance fees when due.

PTOL 85 (Rev 07/04) Approved for use through 04/30/2007

PART B - FEE(S) TRANSMITTAL

Complete and send this form, together with applicable fee(s), to: Mail **Mail Stop ISSUE FEE**
Commissioner for Patents
P.O. Box 1450
Alexandria, Virginia 22313-1450
or Fax (703) 746-4000

INSTRUCTIONS: This form should be used for transmitting the ISSUE FEE and PUBLICATION FEE (if required). Blocks 1 through 5 should be completed wh appropriate. All further correspondence including the Patent, advance orders and notification of maintenance fees will be mailed to the current correspondence address indicated unless corrected below or directed otherwise in Block 1, by (a) specifying a new correspondence address; and/or (b) indicating a separate "FEE ADDRESS" maintenance fee notifications.

CURRENT CORRESPONDENCE ADDRESS (Note: Use Block 1 for any change of address)

7590 08/11/2004

Lyle Guffey
Ste C
3001 Northridge
Farmington, NM 87401

Note: A certificate of mailing can only be used for domestic mailings of Fee(s) Transmittal. This certificate cannot be used for any other accompany papers. Each additional paper, such as an assignment or formal drawing, m have its own certificate of mailing or transmission.

Certificate of Mailing or Transmission
I hereby certify that this Fee(s) Transmittal is being deposited with the Un States Postal Service with sufficient postage for first class mail in an envel addressed to the Mail Stop ISSUE FEE address above, or being facsim transmitted to the USPTO (703) 746-4000, on the date indicated below.

(Depositor's na
(Signat
(D

APPLICATION NO.	FILING DATE	FIRST NAMED INVENTOR	ATTORNEY DOCKET NO.	CONFIRMATION NO.
29/177,343	03/07/2003	Lyle Guffey		1685

TITLE OF INVENTION: HAT STORAGE AND DISPLAY DEVICE

APPLN. TYPE	SMALL ENTITY	ISSUE FEE	PUBLICATION FEE	TOTAL FEE(S) DUE	DATE DUE
nonprovisional	YES	$240	$0	$240	11/12/2004

EXAMINER	ART UNIT	CLASS-SUBCLASS
BUI, DANIEL	2912	D06-327000

1. Change of correspondence address or indication of "Fee Address" (37 CFR 1.363).
   - ❑ Change of correspondence address (or Change of Correspondence Address form PTO/SB/122) attached.
   - ❑ "Fee Address" indication (or "Fee Address" Indication form PTO/SB/47; Rev 03-02 or more recent) attached. **Use of a Customer Number is required.**

2. For printing on the patent front page, list
   (1) the names of up to 3 registered patent attorneys or agents OR, alternatively, 1_____
   (2) the name of a single firm (having as a member a registered attorney or agent) and the names of up to 2 registered patent attorneys or agents. If no name is listed, no name will be printed. 2_____ 3_____

3. ASSIGNEE NAME AND RESIDENCE DATA TO BE PRINTED ON THE PATENT (print or type)

PLEASE NOTE: Unless an assignee is identified below, no assignee data will appear on the patent. If an assignee is identified below, the document has been filed recordation as set forth in 37 CFR 3.11. Completion of this form is NOT a substitute for filing an assignment.

(A) NAME OF ASSIGNEE (B) RESIDENCE: (CITY and STATE OR COUNTRY)

Please check the appropriate assignee category or categories (will not be printed on the patent); ❑ individual ❑ corporation or other private group entity ❑ governm

4a. The following fee(s) are enclosed:
- ❑ Issue Fee
- ❑ Publication Fee (No small entity discount permitted)
- ❑ Advance Order - # of Copies _____

4b. Payment of Fee(s):
- ❑ A check in the amount of the fee(s) is enclosed.
- ❑ Payment by credit card. Form PTO-2038 is attached.
- ❑ The Director is hereby authorized by charge the required fee(s), or credit any overpayment Deposit Account Number _____ (enclose an extra copy of this form).

5. **Change in Entity Status** (from status indicated above)
- ❑ a. Applicant claims SMALL ENTITY status. See 37 CFR 1.27.
- ❑ b. Applicant is not claiming SMALL ENTITY status. See, e.g., 37 CFR 1.27(g)(2).

The Director of the USPTO is requested to apply the Issue Fee and Publication Fee (if any) or to re-apply any previously paid issue fee to the application identified above.

NOTE: The Issue Fee and Publication Fee (if required) will not be accepted from anyone other than the applicant; a registered attorney or agent; or the assignee or other part interest as shown by the records of the United States Patent and Trademark Office.

(Authorized Signature) (Date)

This collection of information is required by 37 CFR 1.311. The information is required to obtain or retain a benefit by the public which is to file (and by the USPTO to proc an application. Confidentiality is governed by 35 U.S.C. 122 and 37 CFR 1.14. This collection is estimated to take 12 minutes to complete, including gathering, preparing, submitting the completed application form to the USPTO. Time will vary depending upon the individual case. Any comments on the amount of time you require to comp this form and/or suggestions for reducing this burden, should be sent to the Chief Information Officer, U.S. Patent and Trademark Office, U.S. Department of Commerce, P Box 1450, Alexandria, Virginia 22313-1450. DO NOT SEND FEES OR COMPLETED FORMS TO THIS ADDRESS. SEND TO: Commissioner for Patents, P.O. Box 14 Alexandria, Virginia 22313-1450.

Under the Paperwork Reduction Act of 1995, no persons are required to respond to a collection of information unless it displays a valid OMB control number.

TRANSMIT THIS FORM WITH FEE(S)

UNITED STATES PATENT AND TRADEMARK OFFICE

UNITED STATES DEPARTMENT OF COMMERCE
United States Patent and Trademark Office
Address: COMMISSIONER FOR PATENTS
P.O. Box 1450
Alexandria, Virginia 22313-1450
www.uspto.gov

APPLICATION NO.	FILING DATE	FIRST NAMED INVENTOR	ATTORNEY DOCKET NO.	CONFIRMATION NO.
29/177,343	03/07/2003	Lyle Guffey		1685

7590 08/11/2004

Lyle Guffey
Ste C
3001 Northridge
Farmington, NM 87401

EXAMINER
BUI, DANIEL

ART UNIT	PAPER NUMBER
2912	

DATE MAILED: 08/11/2004

Determination of Patent Term Extension or Adjustment under 35 U.S.C. 154 (b)

Design patents have a term measured from the issue date of the patent and the term remains the same leng regardless of the time that the application for the design patent was pending. Since the above-identified application an application for a design patent, the patent is not eligible for Patent Term Extension or Adjustment under 35 U.S. 154(b).

Any questions regarding the Patent Term Extension or Adjustment determination should be directed to the Office Patent Legal Administration at (703) 305-1383. Questions relating to issue and publication fee payments should directed to the Customer Service Center of the Office of Patent Publication at (703) 305-8283.

PTOL 85 (Rev 07/04) Approved for use through 04/30/2007

Notice of Allowability	Application No.	Applicant(s)	
	29/177,343	GUFFEY ET AL.	
	Examiner	Art Unit	
	Daniel D Bui	2912	

-- The MAILING DATE of this communication appears on the cover sheet with the correspondence address--

All claims being allowable, PROSECUTION ON THE MERITS IS (OR REMAINS) CLOSED in this application. If not included herewith (or previously mailed), a Notice of Allowance (PTOL-85) or other appropriate communication will be mailed in due course. **THIS NOTICE OF ALLOWABILITY IS NOT A GRANT OF PATENT RIGHTS.** This application is subject to withdrawal from issue at the initiative of the Office or upon petition by the applicant. See 37 CFR 1.313 and MPEP 1308.

1. ☐ This communication is responsive to _____.

2. ☒ The allowed claim(s) is/are 1.

3. ☐ The drawings filed on _____ are accepted by the Examiner.

4. ☐ Acknowledgment is made of a claim for foreign priority under 35 U.S.C. § 119(a)-(d) or (f).
   a) ☐ All b) ☐ Some* c) ☐ None of the:
      1. ☐ Certified copies of the priority documents have been received.
      2. ☐ Certified copies of the priority documents have been received in Application No. _____ .
      3. ☐ Copies of the certified copies of the priority documents have been received in this national stage application from the International Bureau (PCT Rule 17.2(a)).

   * Certified copies not received: _____.

Applicant has THREE MONTHS FROM THE "MAILING DATE" of this communication to file a reply complying with the requirements noted below. Failure to timely comply will result in ABANDONMENT of this application.
THIS THREE-MONTH PERIOD IS NOT EXTENDABLE.

5. ☐ A SUBSTITUTE OATH OR DECLARATION must be submitted. Note the attached EXAMINER'S AMENDMENT or NOTICE OF INFORMAL PATENT APPLICATION (PTO-152) which gives reason(s) why the oath or declaration is deficient.

6. ☒ CORRECTED DRAWINGS (as "replacement sheets") must be submitted.
   (a) ☐ including changes required by the Notice of Draftsperson's Patent Drawing Review (PTO-948) attached
      1) ☐ hereto or 2) ☐ to Paper No./Mail Date _____.
   (b) ☒ including changes required by the attached Examiner's Amendment / Comment or in the Office action of Paper No./Mail Date 08-02-04.

   Identifying indicia such as the application number (see 37 CFR 1.84(c)) should be written on the drawings in the front (not the back) of each sheet. Replacement sheet(s) should be labeled as such in the header according to 37 CFR 1.121(d).

7. ☐ DEPOSIT OF and/or INFORMATION about the deposit of BIOLOGICAL MATERIAL must be submitted. Note the attached Examiner's comment regarding REQUIREMENT FOR THE DEPOSIT OF BIOLOGICAL MATERIAL.

Attachment(s)

1. ☒ Notice of References Cited (PTO-892)
2. ☐ Notice of Draftperson's Patent Drawing Review (PTO-948)
3. ☐ Information Disclosure Statements (PTO-1449 or PTO/SB/08), Paper No./Mail Date _____
4. ☐ Examiner's Comment Regarding Requirement for Deposit of Biological Material
5. ☐ Notice of Informal Patent Application (PTO-152)
6. ☐ Interview Summary (PTO-413), Paper No./Mail Date _____ .
7. ☒ Examiner's Amendment/Comment
8. ☐ Examiner's Statement of Reasons for Allowance
9. ☒ Other *Annotated prints of drawing*.

EXAMINER'S AMENDMENT

An examiner's amendment to the record appears below. Should the changes and/or additions be unacceptable to applicant, an amendment may be filed as provided by 37 CFR 1.312. To ensure consideration of such an amendment, it MUST be submitted no later than the payment of the issue fee.

The drawing

Since Figure 2 is omitted, the drawing is objected to as improper since the drawing views are inconsecutively numbered as to comply with 37 CFR 1.84(u)(1). Therefore, the drawing views must be renumbered consecutively from 1 though 5 (see illustration attached).

Correction of the drawing is required.

The specification

For accuracy, the figure description and the claim starting with - - "FIGURES" - - and end with - - "as shown" - - have been replaced with:

- - "Fig. 1 is a bottom, front and right side perspective view of a hat storage and display device, showing our new design;
Fig. 2 is a top, back and left side perspective view thereof;
Fig. 3 is a top plan view thereof;
Fig. 4 is back elevation view thereof; and
Fig. 5 is a left side elevation view thereof.

The broken line showing of the environment is for illustrative purposes only and forms no part of the claimed design.

We claim:
The ornamental design for a hat storage and display device as shown." - -

Conclusion

Any inquiry concerning this communication or earlier communications from the examiner should be directed to Daniel D. Bui whose telephone number is 571-272-2618. The examiner can normally be reached on Monday to Friday from 8:30 AM to 5:00 PM.

If attempts to reach the examiner by telephone are unsuccessful, the examiner's supervisor, Stella Reid, can be reached on 571-272-2656. The fax phone number for the organization where this application or proceeding is assigned is 703-872-9306.

Information regarding the status of an application may be obtained from the Patent Application Information Retrieval (PAIR) system. Status information for published applications may be obtained from either Private PAIR or Public PAIR. Status information for unpublished applications is available through Private PAIR only. For more information about the PAIR system, see http://pair-direct.uspto.gov. Should you have questions on access to the Private PAIR system, contact the Electronic Business Center (EBC) at 866-217-9197 (toll-free).

DB

August 4, 2004

PRABHAKAR DESHMUKH
PRIMARY EXAMINER

UNITED STATES PATENT AND TRADEMARK OFFICE

Commissioner for Patents
United States Patent and Trademark Office
P.O. Box 1450
Alexandria, VA 22313-1450
www.uspto.gov

COPY MAILED

MAR 2 4 2008

ROBERT W. BECKER
707 STATE HWY. 333/STE. B
TIJERAS, NM 87059-7507

In re Application of	:	
Guffey, et al.	:	DECISION
Application No.: 29/177,343	:	
Filing Date: 7 March, 2003	:	
Attorney Docket No. (None)/Guffey1	:	

This is a decision on the petitions filed on 26 December, 2007, and considered as a request to withdraw the holding of abandonment under 37 C.F.R. §1.181, and, alternatively, a petition under 37 C.F.R. §1.137(b) to revive an application abandoned due to unintentional delay.

The petition as considered under 37 C.F.R. §1.181 is **DISMISSED** and the petition as considered under 37 C.F.R. §1.137(b) is **GRANTED**.

BACKGROUND

The record reflects that:

- Petitioner failed to reply timely and properly to the Drawings Requirement of the Notice of Allowance/Allowability and Fees Due mailed on 11 August, 2004, with reply due under a non-extendable deadline on or before 12 November, 2004;

- the application went abandoned by operation of law after midnight 12 November, 2004;

- Petitioner replied to an 18 November, 2004, Notice of Additional Fees Due ($5.00) on 17 December, 2004 (Petitioner apparently failed to avail himself of the certificate of mailing provisions of 37 C.F.R. §1.8);

- an Office computation of 24 December, 2004, incorrectly calculated the fees as those for a not-small entity, but it does not appear that a Notice was mailed in this regard;

- the Office mailed a Notice of Abandonment as to the drawings requirement on 18 February, 2005;

- on 19 May and 24 October, 2005, Petitioner (co-inventor Guffey) filed the original letters considered as a petition with, *inter alia*, an averment that he complied with the requirements associated with the Notice of Allowance/Allowability and Fees Due (Office record indicate that payment of the fees due was completed on 17 December, 2004), however, he appeared not to appreciate the focus of the Notice of Abandonment was the drawings requirement, further, Petitioner failed to file timely and to make the statements and provide all of the documentation required under the guidance at MPEP §711.03(c); and the filing of 25 May, 2007, provides a reply in the form of drawings and a petition fee and refers to a petition to revive, but failed to include the petition, in that an actual petition was not in evidence in the file–and the petitions were dismissed on 24 September, 2007;

- the instant petitions seek to overcome those deficiencies, however, the request to withdraw the holding of abandonment cannot demonstrate what never happened–i.e., the drawings were not submitted in reply to Notice of Allowance/Allowability and Fees Due (with drawings requirement), nonetheless, Petitioner now has provided the regulatory requirements of the petition to revive averring unintentional delay: the petition and fee, the reply, the statement/showing and the terminal disclaimer required herein.

The availability of applications and application papers online to applicants/practitioners who diligently associate their Customer Number with the respective application(s) now provides an applicant/practitioner immediate and on-demand information as to events/transactions in an application. Thus, now if one wishes to know the progress in and/or status of an application or the accuracy of the data therein, one need only look at the file online.

Out of an abundance of caution, Petitioners always are reminded that the filing of a petition under 37 C.F.R. §1.181 does not toll any periods that may be running any action by the Office and a petition seeking relief under the regulation must be filed within two (2) months of the act complained of (see: 37 C.F.R. §1.181(f)); and those registered to practice *and* all others who make representations before the Office must inquire into the underlying facts of representations made to the Office and support averments with the appropriate documentation–since all owe to the Office the continuing duty to disclose.[1]

---

[1] See supplement of 17 June, 1999. The Patent and Trademark Office is relying on petitioner's duty of candor and good faith and accepting a statement made by Petitioner. See Changes to Patent Practice and Procedure, 62 Fed. Reg. at 53160 and 53178, 1203 Off. Gaz. Pat. Office at 88 and 103 (responses to comments 64 and 109)(applicant obligated under 37 C.F.R. §10.18 to inquire into the underlying facts and

STATUTES, REGULATIONS AND ANALYSIS

Congress has authorized the Commissioner to "revive an application if the delay is shown to the satisfaction of the Commissioner to have been "unavoidable." 35 U.S.C. §133 (1994).[2]

The regulations at 37 C.F.R. §1.137(a) and (b) set forth the requirements for a petitioner to revive a previously unavoidably or unintentionally, respectively, abandoned application under this congressional grant of authority. The language of 35 U.S.C. §133 and 37 C.F.R. §1.137(a) is clear, unambiguous, and without qualification: the delay in tendering the reply to the outstanding Office action, as well as filing the first petition seeking revival, must have been unavoidable for the reply now to be accepted on petition.[3]

Delays in responding properly raise the question whether delays are unavoidable.[4] Where there is a question whether the delay was unavoidable, Petitioners must meet the burden of establishing that the delay was unavoidable within the meaning of 35 U.S.C. §133 and 37 C.F.R. §1.137(a).[5]

And the Petitioner must be diligent in attending to the matter.[6] Failure to do so does not constitute the care required under Pratt, and so cannot satisfy the test for diligence and due care.

(By contrast, unintentional delays are those that do not satisfy the very strict statutory and regulatory requirements of unavoidable delay, and also, by definition, are not intentional.[7]))

---

circumstances when providing statements to the Patent and Trademark Office).

[2] 35 U.S.C. §133 provides:
35 U.S.C. §133 Time for prosecuting application.
Upon failure of the applicant to prosecute the application within six months after any action therein, of which notice has been given or mailed to the applicant, or within such shorter time, not less than thirty days, as fixed by the Commissioner in such action, the application shall be regarded as abandoned by the parties thereto, unless it be shown to the satisfaction of the Commissioner that such delay was unavoidable.

[3] Therefore, by example, an unavoidable delay in the payment of the Filing Fee might occur if a reply is shipped by the US Postal Service, but due to catastrophic accident, the delivery is not made.

[4] See: *Changes to Patent Practice and Procedure; Final Rule Notice*, 62 *Fed. Reg.* at 53158-59 (October 10, 1997), 1203 *Off. Gaz. Pat. Office* at 86-87 (October 21, 1997).

[5] See: In re Application of G, 11 USPQ2d 1378, 1380 (Comm'r Pats. 1989).

[6] See: Diligence in Filing Petitions to Revive and Petitions to Withdraw the Holding of Abandonment, 1124 Off. Gaz. Pat. Office 33 (March 19, 1991). It was and is Petitioner's burden to exercise diligence in seeking either to have the holding of abandonment withdrawn or the application revived. See 1124 Off. Gaz. Pat. Office supra.

[7] Therefore, by example, an unintentional delay in the reply might occur if the reply and transmittal form are to be prepared for shipment by the US Postal Service, but other pressing matters distract one's attention and the mail is not timely deposited for shipment.

Allegations as to the Request to
Withdraw the Holding of Abandonment

The courts have determined the construct for properly supporting a petition seeking withdrawal of a holding of abandonment.[8] (See: the guidance in the Commentary at MPEP §711.03(c)(I)(A) and (B).

Moreover, the regulation places upon Petitioner a diligence requirement to seek relief within two (2) months of the act complained of.

It appears that Petitioner has not satisfied the showing timing requirements herein.

Allegations as to
Unintentional Delay

The requirements for a grantable petition under 37 C.F.R. §1.137(b) are the petition and fee, a statement/showing of unintentional delay, a proper reply, and–where appropriate--a terminal disclaimer and fee.

Petitioner appears to have satisfied the regulatory requirements.

CONCLUSION

Because it appears that Petitioner has not satisfied the burdens herein, the petition as considered under 37 C.F.R. §1.181 is **dismissed**, however, the petition under 37 C.F.R. §1.137(b) is **granted**.

The instant application is released to Publications Branch to be processed into a patent in due course.

Petitioner may find it beneficial to view Private PAIR within a fortnight of the instant decision to ensure that the revival has been acknowledged by the Publications Branch in response to this decision—and it is noted that all inquiries with regard to any failure of that change in status should be directed to the Publications Branch where that change of status must be effected.

---

[8] See: Delgar v. Schulyer, 172 USPQ 513 (D.D.C. 1971).

While telephone inquiries regarding this decision may be directed to the undersigned at (571) 272-3214, it is noted that all practice before the Office is in writing (see: 37 C.F.R. §1.2[9]) and the proper authority for action on any matter in this regard are the statutes (35 U.S.C.), regulations (37 C.F.R.) and the commentary on policy (MPEP). Therefore, no telephone discussion may be controlling or considered authority for Petitioner's action(s).

John J. Gillon, Jr.
Senior Attorney
Office of Petitions

---

[9] The regulations at 37 C.F.R. §1.2 provide:
§1.2 Business to be transacted in writing.
All business with the Patent and Trademark Office should be transacted in writing.The personal attendance of applicants or their attorneys or agents at the Patent and Trademark Office is unnecessary. The action of the Patent and Trademark Office will be based exclusively on the written record in the Office. No attention will be paid to any alleged oral promise, stipulation,or understanding in relation to which there is disagreement or doubt.

UNITED STATES PATENT AND TRADEMARK OFFICE

Commissioner for Patents
United States Patent and Trademark Office
P.O. Box 1450
Alexandria, VA 22313-1450
www.uspto.gov

8/23/05

MITCHELL P BROOK, ESQ
LUCE, FORWARD, HAMILTON & SCRIPPS LLP
SUITE 200
11988 EL CAMINO REAL
SAN DIEGO, CA 92130

In re Application of
Toni Kancilja
Serial No.: 29/177,350
Filed: March 7, 2003
Attorney Docket No.: 30238-19

: PETITION DECISION

This is a decision on applicant's petition to revive patent application under 37 CFR 1.137(b), filed July 22, 2005, to revive an unintentionally abandoned application.

This application became abandoned for failure to respond to the Notice of Allowance mailed July 29, 2004, which set a three-month statutory period to submit the Issue Fee and formal drawings. The Issue fee was submitted September 21, 2004; however, as no formal drawings were received by October 29, 2004, a Notice of Abandonment was mailed December 14, 2004. Applicant then filed this petition.

A grantable petition for a design application under 37 CFR 1.137(b), as revised December 1, 1997, requires four items: (1) a petition and petition fee; (2) a complete response if not earlier made; (3) a statement that the entire period of delay in prosecution was unintentional; and (4) a terminal disclaimer and disclaimer fee.

Applicant's petition is **GRANTED**.

The application will be forwarded to Publication Division for printing as a patent in due course.

Should there be any questions with respect to this decision, please contact Sandra Morris; by mail addressed to: Director, Technology Center 1700/2900, P.O. Box 1450, Alexandria, VA 22313-1450; or by telephone at (571) 272-2622.

Jacqueline M. Stone

Jacqueline Stone
Director, Technology Center 1700/2900

UNITED STATES PATENT AND TRADEMARK OFFICE

COMMISSIONER FOR PATENTS
UNITED STATES PATENT AND TRADEMARK OFFICE
WASHINGTON, D.C. 20231
www.uspto.gov

Paper No. 6

OLIFF & BERRIDGE, PLC
P.O. BOX 19928
ALEXANDRIA VA 22320

COPY MAILED

JUN 3 0 2003

OFFICE OF PETITIONS

In re Application of	:	
NAKAMURA et al.	:	
Application No. 29/177,390	:	DECISION ON PETITION
Filed: March 11, 2003	:	
Attorney Docket No. 115288	:	

This is a decision on the petition filed on May 20, 2003, requesting that the above-identified application be accorded a filing date of March 11, 2003.

On March 11, 2003, the application papers were deposited with the United States Patent and Trademark Office. However, on April 24, 2003, the Office of Initial Patent Examination Division mailed a "Notice of Incomplete Nonprovisional Application" informing petitioner that the application papers had not been accorded a filing date because the specification does not include at least one claim. Additionally, the Notice stated that an oath or declaration was missing. **Petitioner is reminded that petitioner must submit an oath or declaration and surcharge within the period set forth in the Notice to avoid abandonment of the present application.**

On May 20, 2003, petitioner timely responded with the present petition. Petitioner asserts that the originally filed specification, in fact, included a claim. Per petitioner, this claim was included in the specification as follows:

> The broken lines in each drawing are shown for illustrative purposes only and form no part of the claimed design. More specifically, the claimed design of the first and third embodiments are directed to the upper left two liquid injection heads and the second and fourth embodiments are directed to all of the liquid injection heads. Further, the dots shown in each head represent liquid injection ports and do not form part of the claimed design. (Emphasis added).

Petitioner asserts that the second sentence of the paragraph indicates that petitioner are claiming the ornamental appearance of an ink jet liquid injector as shown and described, and constitutes a claim for purposes of receiving a filing date for this application. Further, petitioner argues that the above-quoted paragraph also further specifies, what is being claimed.

A review of the record reveals that no formal claim was included with the application papers deposited March 11, 2003. With the petition, petitioner submits a preliminary amendment to add a formal claim.

The application papers deposited on March 11, 2003, may be accorded a filing date provided that it complies with the requirements of 35 U.S.C. 111 and 112. At issue here is the requirement of Section 112 for a claim. The requirement for a claim in a design application is a requirement of the statute. Section 171 of Title 35 of the United States Code makes Section 112 applicable to design applications. Section 112 requires that the "specification shall conclude with one or more claims..." Thus, the requirement for a claim in a design application is not *pro forma*, but is a necessary part of a complete design application.

However, since this is a design application, the above-quoted language in the specification can be construed as the claim required by 35 U.S.C. 112, second paragraph, insofar as this design application is concerned. The form of a claim in a design application is fixed by rule and is accordingly different from the claims of other applications. Accordingly, because this is a design application and the claim language quoted above does appear at the conclusion or end of the specification, there is no statutory prohibition against construing this language as the claim required by statute. It is also clear that there has been, and is, no doubt as to the form of, and what is to be claimed herein since this is a design application for which the form of the claim is set by 37 CFR 1.153. Under the circumstances, it is appropriate that the language quoted above from the specification be construed as the claim for filing date purposes.

Petitioner is reminded that errors such as occurred herein can result in loss of rights and care must be taken to avoid such.

The petition is **granted** to the extent that the language cited in the specification will be construed as a claim.

The petition fee will not be refunded as the petition was necessary to correct petitioner's filing error, i.e. the omission of a formal claim.

The preliminary amendment filed on May 20, 2003, will be entered in due course.

The application is being forwarded to the Office of Initial Patent Examination for further processing **with a filing date of March 11, 2003**, and for an indication in Office records that the application-as-filed included one (1) claim.

Telephone inquiries concerning this matter may be directed to the undersigned at (703) 306-5589.

Christina Tartera Donnell

Christina Tartera Donnell
Senior Petitions Attorney
Office of Petitions

UNITED STATES PATENT AND TRADEMARK OFFICE

COMMISSIONER FOR PATENTS
UNITED STATES PATENT AND TRADEMARK OFFICE
P.O. BOX 1450
ALEXANDRIA, VA 22313-1450
www.uspto.gov

Paper No.4

STEPHEN R. BUCKINGHAM
LOWENSTEIN SANDLER PC
65 Livingston Avenue
Roseland, NJ 07068-1791

COPY MAILED
SEP 1 1 2003
OFFICE OF PETITIONS

In re Application of
Barbagallo et al.
Application No. 29/177,421
Filed: March 10, 2003
Attorney Docket No.: 10016-20

ON PETITION

This is a decision on the petition filed May 19, 2003 under 37 CFR 1.182, requesting Figures 4,5,6 and 7 be added to the above-identified application.

The application was filed on March 10, 2003. However, on April 22, 2003, the Office of Initial Patent Examination mailed a Notice stating that the application had been accorded a filing date of March 10, 2003 but figures 4,5,6 and 7 as described in the specification appeared to have been omitted.

In response, figures 4,5,6 and 7 as described in the specification and the present petition were filed on May 19, 2003. The petition states applicant elects option II of the Notice. Under option II applicant supplies the omitted figures and accepts the filing date as the date the omitted items were filed in the USPTO.

The mailing of a "Notice of Omitted Items" permits the applicant to either: (1)promptly establish prior receipt in the PTO of the items at issue (generally by way of a date-stamped postcard receipt (MPEP 503)), or (2) promptly submit the omitted items in a nonprovisional application and accept the date of such submission as the application filing date. An applicant asserting that the missing items were in fact deposited in the PTO with the application papers must file a petition (and the appropriate petition fee) with evidence of such deposit. An applicant desiring to submit the omitted items in a nonprovisional application and accept the date of such submission as the application filing date must file any omitted items with an oath or declaration in compliance with 37 CFR 1.63 and 1.64 referring to such items and a petition under 37 CFR 1.182 (with the petition fee under 37 CFR 1.17(h)) requesting the later filing date within two months of the date of the "notice of Omitted Items" (37 CFR 1.181(f)).

The petition is Granted.

A newly executed oath or declaration is not required under 37 CFR 1.51(b)(2) and 1.53(f) in a continuation or divisional application, provided that the specification and drawings filed in the continuation or divisional application contain no matter that would have been new matter in the prior application. See 37

CFR 1.63(d)(1). For initial processing purposes, it is presumed that the drawings filed May 19, 2003, contain no matter that would have been new matter in the prior application. Thus, the application will be processed using the copies of the declarations deposited on March 10, 2003. No surcharge is required, since the declaration was present on the March 10, 2003.

The application is being returned to the Office of Initial Patent Examination for further processing with a filing date of **May 19, 2003** using the application papers received in the Office on that date.

Telephone inquiries related to this decision may be directed to Petitions Attorney Charlema R. Grant at (703) 306-0251.

Beverly M. Flanagan
Supervisory Petitions Examiner
Office of Petitions

UNITED STATES PATENT AND TRADEMARK OFFICE

COMMISSIONER FOR PATENTS
UNITED STATES PATENT AND TRADEMARK OFFICE
P.O. BOX 1450
ALEXANDRIA, VA 22313-1450
www.uspto.gov

NOV 18 2004

Lawrence R. Burns, Esquire
310 Coulter Building
231 South Main Street
Greensburg PA 15601

In re Application of
Harry Gordon Fabian
Serial No.: 29/177,509
Filed: March 11, 2003
Attorney Docket No.:

: PETITION DECISION

This is a decision on applicant's Petition under 37 CFR 1.137(a), which is being treated as a petition under 37 CFR 1.137(b) submitted October 1, 2004, to revive an unintentionally abandoned application. As applicant has not given a statement as to why the abandonment of the application was unavoidable, it is being treated an unintentional abandonment.

This application became abandoned for failure to respond to the Notice of Allowance mailed March 23, 2004, which set a three-month statutory period to pay the Issue fee. As no reply was submitted by June 23, 2004, the application was abandoned August 3, 2004. Applicant then filed this petition.

A grantable petition under 37 CFR 1.137(b), as revised December 1, 1997, requires four items: (1) a petition and petition fee; (2) a complete response if not earlier made; (3) a statement that the entire period of delay in prosecution was unintentional; and (4) a terminal disclaimer and disclaimer fee. The requirement for a terminal disclaimer has been waived, as the petition was submitted within two months the mailing of the Notice of Abandonment.

Applicant's petition is **GRANTED.**

The application will be forwarded to Publications Branch to be issued into a Patent in due course.

Should there be any questions with respect to this decision, please contact Sandra Morris; by mail addressed to: Director, Technology Center 3700/2900, P.O. Box 1450, Alexandria, VA 22313-1450; or by telephone at (571) 272-2622.

John Kittle
Director, Technology Center 3700/2900

UNITED STATES PATENT AND TRADEMARK OFFICE

COMMISSIONER FOR PATENTS
UNITED STATES PATENT AND TRADEMARK OFFICE
P.O. BOX 1450
ALEXANDRIA, VA 22313-1450
www.uspto.gov
AMB

Paper No. 6

DESIGN IP, DEPT. MOT
100 S. BROAD STREET
SUITE 1518
PHILADELPHIA, PA 19110

COPY MAILED

AUG 07 2003

OFFICE OF PETITIONS

In re Application of Harshbarger, et al. Application No. 29/177,510 Filed: March 10, 2003 Attorney Docket No.: MOT-CS22405RL	:	ON PETITION

This decision is in response to the petition under 37 CFR 1.10(c), filed May 12, 2003, requesting that the above-identified application be accorded a filing date of March 10, 2003 instead of the presently accorded filing date of March 12, 2003.

Petitioner alleges that the application was deposited in Express Mail service March 10, 2003. In support, petitioner provided a copy of the application transmittal letter bearing tracking number EO900569370US (the same Express Mail number found on the application transmittal letter accompanying the original application papers located in the official file). Petitioner has also enclosed a copy of a USPS Track/Confirm document, downloaded from the USPS website, which shows that a package bearing label No. EO900569370US was deposited into Express Mail service on March 10, 2003, as alleged by petitioner, and delivered to Washington, DC March 12, 2003.

Despite the fact that the instant petition fails to comply with 37 CFR 1.10(c)(3), the evidence presented by petitioner is convincing.

Accordingly, in view of the above, the petition is **GRANTED**.

No fee is due in connection with this matter.

This application is being forwarded to the Official of Initial Patent Examination for correction of the filing date to March 10, 2003.

Telephone inquiries related to this decision may be directed to the undersigned at (703) 305-0310.

Alesia M. Brown
Senior Petitions Attorney
Office of Petitions

UNITED STATES PATENT AND TRADEMARK OFFICE

UNITED STATES DEPARTMENT OF COMMERCE
United States Patent and Trademark Office
Address: COMMISSIONER FOR PATENTS
P.O. Box 1450
Alexandria, Virginia 22313-1450
www.uspto.gov

APPL NO.	FILING OR 371 (c) DATE	ART UNIT	FIL FEE REC'D	ATTY.DOCKET NO	DRAWINGS	TOT CLMS	IND CLMS
29/177,510	03/10/2003	2913	460	MOT-CS22405RL	9	1	1

CONFIRMATION NO. 4601

CORRECTED FILING RECEIPT

OC000000010987791

35813
DESIGN IP, DEPT. MOT
100 S. BROAD STREET
SUITE 1518
PHILADELPHIA, PA 19110

Date Mailed: 10/06/2003

Receipt is acknowledged of this regular Patent Application. It will be considered in its order and you will be notified as to the results of the examination. Be sure to provide the U.S. APPLICATION NUMBER, FILING DATE, NAME OF APPLICANT, and TITLE OF INVENTION when inquiring about this application. Fees transmitted by check or draft are subject to collection. Please verify the accuracy of the data presented on this receipt. **If an error is noted on this Filing Receipt, please write to the Office of Initial Patent Examination's Filing Receipt Corrections, facsimile number 703-746-9195. Please provide a copy of this Filing Receipt with the changes noted thereon. If you received a "Notice to File Missing Parts" for this application, please submit any corrections to this Filing Receipt with your reply to the Notice. When the USPTO processes the reply to the Notice, the USPTO will generate another Filing Receipt incorporating the requested corrections (if appropriate).**

Applicant(s)

Michael Harshbarger, Lake Villa, IL;
Shakil Barkat, Hawthorn Woods, IL;
Phillips W. Lohr, Deerfield, IL;

Domestic Priority data as claimed by applicant

F reign Applications

If Required, Foreign Filing License Granted: 04/24/2003

Projected Publication Date: None, application is not eligible for pre-grant publication

Non-Publication Request: No

Early Publication Request: No

Title

Portion of a housing device for a communication device

Preliminary Class

D14

LICENSE FOR FOREIGN FILING UNDER
Title 35, United States Code, Section 184
Title 37, Code of Federal Regulations, 5.11 & 5.15

GRANTED

The applicant has been granted a license under 35 U.S.C. 184, if the phrase "IF REQUIRED, FOREIGN FILING LICENSE GRANTED" followed by a date appears on this form. Such licenses are issued in all applications where the conditions for issuance of a license have been met, regardless of whether or not a license may be required as set forth in 37 CFR 5.15. The scope and limitations of this license are set forth in 37 CFR 5.15(a) unless an earlier license has been issued under 37 CFR 5.15(b). The license is subject to revocation upon written notification. The date indicated is the effective date of the license, unless an earlier license of similar scope has been granted under 37 CFR 5.13 or 5.14.

This license is to be retained by the licensee and may be used at any time on or after the effective date thereof unless it is revoked. This license is automatically transferred to any related applications(s) filed under 37 CFR 1.53(d). This license is not retroactive.

The grant of a license does not in any way lessen the responsibility of a licensee for the security of the subject matter as imposed by any Government contract or the provisions of existing laws relating to espionage and the national security or the export of technical data. Licensees should apprise themselves of current regulations especially with respect to certain countries, of other agencies, particularly the Office of Defense Trade Controls, Department of State (with respect to Arms, Munitions and Implements of War (22 CFR 121-128)); the Office of Export Administration, Department of Commerce (15 CFR 370.10 (j)); the Office of Foreign Assets Control, Department of Treasury (31 CFR Parts 500+) and the Department of Energy.

NOT GRANTED

No license under 35 U.S.C. 184 has been granted at this time, if the phrase "IF REQUIRED, FOREIGN FILING LICENSE GRANTED" DOES NOT appear on this form. Applicant may still petition for a license under 37 CFR 5.12, if a license is desired before the expiration of 6 months from the filing date of the application. If 6 months has lapsed from the filing date of this application and the licensee has not received any indication of a secrecy order under 35 U.S.C. 181, the licensee may foreign file the application pursuant to 37 CFR 5.15(b).

UNITED STATES PATENT AND TRADEMARK OFFICE

COMMISSIONER FOR PATENTS
UNITED STATES PATENT AND TRADEMARK OFFICE
P.O. BOX 1450
ALEXANDRIA, VA 22313-1450
www.uspto.gov
AMB

Paper No. 6

DESIGN IP, DEPT. MOT
100 S. BROAD STREET
SUITE 1518
PHILADELPHIA, PA 19110

COPY MAILED

AUG 07 2003

OFFICE OF PETITIONS

In re Application of :
Harshbarger, et al. :
Application No. 29/177,510 : ON PETITION
Filed: March 10, 2003 :
Attorney Docket No.: MOT-CS22405RL :

This decision is in response to the petition under 37 CFR 1.10(c), filed May 12, 2003, requesting that the above-identified application be accorded a filing date of March 10, 2003 instead of the presently accorded filing date of March 12, 2003.

Petitioner alleges that the application was deposited in Express Mail service March 10, 2003. In support, petitioner provided a copy of the application transmittal letter bearing tracking number EO900569370US (the same Express Mail number found on the application transmittal letter accompanying the original application papers located in the official file). Petitioner has also enclosed a copy of a USPS Track/Confirm document, downloaded from the USPS website, which shows that a package bearing label No. EO900569370US was deposited into Express Mail service on March 10, 2003, as alleged by petitioner, and delivered to Washington, DC March 12, 2003.

Despite the fact that the instant petition fails to comply with 37 CFR 1.10(c)(3), the evidence presented by petitioner is convincing.

Accordingly, in view of the above, the petition is **GRANTED**.

No fee is due in connection with this matter.

This application is being forwarded to the Official of Initial Patent Examination for correction of the filing date to March 10, 2003.

Telephone inquiries related to this decision may be directed to the undersigned at (703) 305-0310.

Alesia M. Brown
Senior Petitions Attorney
Office of Petitions

UNITED STATES PATENT AND TRADEMARK OFFICE

Commissioner for Patents
United States Patent and Trademark Office
P.O. Box 1450
Alexandria, VA 22313-1450
www.uspto.gov

Steven B. Pokotilow
Stroock & Stroock & Lavan LLP
180 Maiden Lane
New York, NY 10038

COPY MAILED

FEB 1 3 2006

OFFICE OF PETITIONS

In re Patent of :
Chodat :
Patent No. D502,407 :
Issue Date: March 1, 2005 :
Application No. 29/177,701 :
Filing Date: March 13, 2003 :
Attorney Docket No. 160221/0028 :

Decision on Petition

This is a decision on the petition under 37 C.F.R. § 1.183, filed October 21, 2005, to waive the rules and accept the correction of the assignee data on the front page of the above-identified patent. The petition is also being treated as a request under 37 CFR 3.81 to accept the correction of the assignee data.

The petition under 37 CFR 1.183 is **DISMISSED AS MOOT.**

The request under 37 CFR 3.81 is **GRANTED**.

Effective June 25, 2004, the practice relating to issuance of a patent to an assignee was modified by requiring that, after payment of an issue fee, a request for a certificate of correction must be filed in order to obtain issuance of the patent to an assignee. Thus, where the assignment data is submitted after payment of the issue fee, the patent document will not include the assignment information. Therefore, as 37 CFR 3.81(b) was modified to provide for issuance of the patent to the assignee, the practice of waiving the rule (37 CFR 3.81(a)) under 37 CFR 1.183 is longer necessary and has been eliminated.

37 CFR 3.81(b), as modified, reads:

> Any request for issuance of an application in the name of the assignee submitted after the date of payment of the issue fee, and any request for a patent to be corrected to state the name of the assignee, must state that the assignment was submitted for recordation as set forth in § 3.11 before issuance of the patent, and must include a request for a certificate of correction under § 1.323 of this chapter (accompanied by the fee set forth in § 1.20(a)) and the processing fee set forth in § 1.17(i) of this chapter.

In other words, the request under 37 CFR 3.81(b) will be granted when:

(1) a request under 37 CFR 3.81 and the fee set forth in 37 CFR 1.17(i) are filed,
(2) the assignment was submitted for recordation prior to issuance of the patent, and
(3) a request for a certificate of correction and the fee set forth in 37 CFR 1.20(a) are submitted.

Petitioner has met the requirements set forth above. Therefore, the request is granted.

Petitioner's deposit account has been charged $130 for the request under 37 CFR 3.81 and $100 for the Certificate of Correction.

Certificates of Correction Branch will be informed of the instant decision so that it may take steps to issue the requested Certificate of Correction.

Telephone inquiries should be directed to Petitions Attorney Steven Brantley at (571) 272-3203.

Charles Steven Brantley
Petitions Attorney
Office of Petitions

UNITED STATES PATENT AND TRADEMARK OFFICE

COMMISSIONER FOR PATENTS
UNITED STATES PATENT AND TRADEMARK OFFICE
P.O. BOX 1450
ALEXANDRIA, VA 22313-1450
www.uspto.gov

OCT 14 2003

LIZ L. SCHOENING
711 W. FINE AVENUE
N. WILDWOOD, NJ 08260

In re Application of	:	
Liz L. Schoening	:	
Serial No.: 29/177,723	:	DECISION ON PETITION
Filed: March 17, 2003	:	
For: Burn Safe Home Curling Iron Holder	:	

This is in response to applicants' petition filed September 5, 2003, to make the above-identified application special under the provisions of 37 CFR 1.102(c), based on the age of the applicant.

Applicant has satisfied the provisions set forth in M.P.E.P. 708.02, IV. Therefore the petition is **GRANTED**.

The application will be forwarded to the examiner for action on the merits commensurate with this decision.

Should there be any questions with regard to this letter please contact John Kittle by letter addressed to the Director, Technology Center 3700/2900, or by telephone at (703) 308-0873 or by facsimile transmission at (703) 308-3139.

John E. Kittle
Director,
Technology Center 3700/2900

UNITED STATES PATENT AND TRADEMARK OFFICE

Commissioner for Patents
United States Patent and Trademark Office
P. O. Box 1450
Alexandria, VA 22313-1450
www.uspto.gov

Paper No. 3

BROWDY AND NEIMARK P.L.L.C.
624 NINTH STREET, NW
SUITE 300
WASHINGTON, DC 20001-5303

COPY MAILED
SEP 3 0 2003
OFFICE OF PETITIONS

In re Application of
Volodymyr Zalyasko
Application No. 29/177,818
Filed: March 18, 2003
Attorney Docket No. ZALYASK01

NOTICE

This is a notice regarding your request for acceptance of a fee deficiency submission under 37 CFR 1.28. On September 1, 1998, the Court of Appeals for the Federal Circuit held that 37 CFR 1.28(c) is the sole provision governing the time for correction of the erroneous payment of the issue fee as a small entity. **See DH Technology v. Synergystex International, Inc. 154 F.3d 1333, 47 USPQ2d 1865 (Fed. Cir. Sept. 1, 1998).**

The Office no longer investigates or rejects original or reissue applications under 37 CFR 1.56. **1098 Off. Gaz. Pat. Office 502 (January 3, 1989).** Therefore, nothing in this Notice is intended to imply that an investigation was done.

Your fee deficiency submission under 37 CFR 1.28 is hereby **ACCEPTED**.

Inquiries related to this communication should be directed to the Office of Petitions Staff at (703) 305-9285.

This file is being forwarded to Technology Center 2900.

Irvin Dingle
Petitions Examiner
Office of Petitions
Office of the Deputy Commissioner
for Patent Examination Policy

UNITED STATES PATENT AND TRADEMARK OFFICE

JUL 16 2004

Commissioner for Patents
United States Patent and Trademark Office
P.O. Box 1450
Alexandria, VA 22313-1450
www.uspto.go

LAW OFFICE OF LAWRENCE E. LAUBSCHER JR.
1160 SPA ROAD, SUITE 2B
ANNAPOLIS, MD 21403

In re Application of	:
Steven J. Mahaffey	:
Serial No.: 29/177,830	: PETITION DECISION
Filed: March 17, 2003	:
Attorney Docket No.: P-6271DN	:

This is a decision on applicant's Petition under 37 CFR 1.137(b) submitted March 31, 2004, to revive an unintentionally abandoned application.

This application became abandoned for failure to respond to the Notice of Allowance mailed December 30, 2003, which set a three-month statutory period to pay the issue fee. As no response was received by March 30, 2004, the application was abandoned. Applicant then filed this petition.

A grantable petition under 37 CFR 1.137(b), as revised December 1, 1997, requires four items: (1) a petition and petition fee; (2) a complete response if not earlier made; (3) a statement that the entire period of delay in prosecution was unintentional; and (4) a terminal disclaimer and disclaimer fee. Because this petition was filed within one month of abandonment, the requirement for a terminal disclaimer has been waived.

Applicant's petition is **GRANTED.**

The application will be forwarded to Issue Branch to be processed as a patent in due course.

Should there be any questions with respect to this decision, please contact Sandra Morris; by mail addressed to: Director, Technology Center 3700/2900, P.O. Box 1450, Alexandria, VA 22313-1450; or by telephone at (571) 272-2622.

John Kittle
Director, Technology Center 3700/2900

UNITED STATES PATENT AND TRADEMARK OFFICE

COMMISSIONER FOR PATENTS
UNITED STATES PATENT AND TRADEMARK OFFICE
P.O. BOX 1450
ALEXANDRIA, VA 22313-1450
www.uspto.gov

Paper No. 3

JOHN A. CHIONCHIO, ESQ.
SYNNESTVEDT & LECHNER LLP
SUITE 2600
1101 MARKET STREET
PHILADELPHIA, PA 19107-2950

COPY MAILED
NOV 25 2003
OFFICE OF PETITIONS

In re Application of:
Stephen J. Minshull and
Martin Miller
Application No. 29/177,849
Filed: March 17, 2003
Title of Invention: INHALER

ON PETITION

This is in response to a petition under 37 CFR 1.47(a), filed November 3, 2003, to allow the other inventor(s) to proceed with the application on behalf of himself or herself and the nonsigning inventor.

The petition is **dismissed**.

Rule 47 applicant is given TWO (2) MONTHS from the mailing date of this decision to reply, correcting the below-noted deficiencies. Any reply should be entitled "Request for Reconsideration of Petition Under 37 CFR 1.47(a)", and should only address the deficiencies noted below, except that the reply may include an oath or declaration executed by the non-signing inventor. Failure to respond will result in abandonment of the application. Any extensions of time will be governed by 37 CFR 1.136(a).

The above-identified application was filed on March 17, 2003, without a fully executed oath or declaration. The Office mailed a Notice to File Missing Parts of Nonprovisional Application (hereinafter "Notice"), on May 5, 2003, requiring *inter alia*, an executed oath or declaration.

In response to the Notice, Applicant files the instant petition where Applicant avers that inventor Miller refuses to join in the application. The petition is supported by the Declaration of Melanie Homes, wherein Ms. Homes states that a Declaration and Power of Attorney and an Assignment for the above-identified application was sent to inventor Miller.

Applicable Law

A grantable petition under 37 CFR 1.47(a) requires: (1) proof that the non-signing inventor cannot be reached or refuses to sign the oath or declaration after having been presented with the application papers (specification, claims and drawings); (2) an acceptable oath or declaration in compliance with 35 U.S.C. §§ 115 and 116; (3) the petition fee; and (4) a statement of the last known address of the non-signing inventor. Applicant lacks item (1) as set forth above.

Applicant lacks item (1) set forth above.

As to item (1), where it is alleged that an applicant refuses to join an application, the applicant must establish that the nonsigning inventor was presented with the application for signature. The Manual of Patent Examining Procedure ("MPEP") states that

> A refusal by an inventor to sign an oath or declaration when the inventor has not been presented with the application papers does not itself suggest that the inventor is refusing to join the application unless it is clear that the inventor understands exactly what he or she is being asked to sign and refuses to accept the application papers. A copy of the application papers should be sent to the last known address of the nonsigning inventor, or, if the nonsigning inventor is represented by counsel, to the address of the nonsigning inventor's attorney.

MPEP 409.03(d).

A copy of the application (specification, claims and drawings) must be sent to the last known address of the nonsigning inventor.

Further correspondence with respect to this matter should be addressed as follows:

By mail: Mail Stop Petitions
Commissioner for Patents
PO Box 1450
Alexandria, VA 22313-1450

By FAX: (703) 872-9306
Attn: Office of Petitions

By hand: 2201 South Clark Place
Customer Window
Crystal Plaza Two, Lobby Room 1B03
Arlington, VA 22202

Telephone inquiries concerning this matter should be directed to the undersigned at (703) 305-0014.

Derek L. Woods
Petitions Attorney
Office of Petitions

UNITED STATES PATENT AND TRADEMARK OFFICE

COMMISSIONER FOR PATENTS
UNITED STATES PATENT AND TRADEMARK OFFICE
P.O. BOX 1450
ALEXANDRIA, VA 22313-1450
www.uspto.gov

Paper No. 8

JOHN A. CHIONCHIO, ESQ.
SYNNESTVEDT & LECHNER LLP
SUITE 2600
1101 MARKET STREET
PHILADELPHIA, PA 19107-2950

COPY MAILED

FEB 11 2004

OFFICE OF PETITIONS

In re Application of:
Stephen J. Minshull and
Martin Miller
Application No. 29/177,849
Filed: March 17, 2003
Title of Invention: INHALER

ON PETITION

This is in response to a Request for Reconsideration of Petition under 37 CFR 1.47(a), filed Januar 26, 2004, to allow the other inventor to proceed with the application on behalf of himself and the nonsigning inventor.

The petition is **granted**.

The above-identified application and papers have been reviewed and found in compliance with 37 CFR 1.47(a). This application is hereby accorded Rule 1.47(a) status.

Petitioner has shown that the non-signing inventor, Martin Miller, refuses to join in the application.

As provided in Rule 1.47(a), this Office will forward notice of this application's filing to the non-signing inventors at the addresses given in the Petition. Notice of the filing of this application will also be published in the Official Gazette.

The Declaration/Power of Attorney has been entered and made of record.

There is no indication that the person filing the instant petition is authorized to do so. A courtesy copy of this decision is being mailed to Petitioner at the address on the petition; however, all future communications from the Office will be directed to the correspondence address above unless the Office receives proper notification otherwise.

The application file is being returned to the Office of Initial Patent Examination for continued processing.

Telephone inquiries related to this decision may be directed to the undersigned at (703) 305-0014.

Derek L. Woods
Petitions Attorney
Office of Petitions

Cc: AVENTIS PHARMACEUTICALS INC.
ROUTE 202-206 ; MAIL STOP :D303A
BRIDGEWATER, NJ 08807

UNITED STATES PATENT AND TRADEMARK OFFICE

NOV 18 2004

Commissioner for Patents
United States Patent and Trademark Office
P.O. Box 1450
Alexandria, VA 22313-1450
www.uspto.gov

TROXELL LAW OFFICE PLLC
SUITE 1404
5205 LEESBURG PIKE
FALLS CHURCH VA 22041

In re Application of	:
I-Min Hsiao	:
Serial No.: 29/177,903	: PETITION DECISION
Filed: March 19, 2003	:
Attorney Docket No.: BHT-3326-27	:

This is a decision on applicant's Petition under 37 CFR 1.137(b) submitted September 8, 2004, to revive an unintentionally abandoned application.

This application became abandoned for failure to respond to the Notice of Allowance mailed May 7, 2004, which set a three-month statutory period to pay the Issue fee. As no reply was submitted by August 9, 2004, the application was abandoned. Applicant then filed this petition.

A grantable petition under 37 CFR 1.137(b), as revised December 1, 1997, requires four items: (1) a petition and petition fee; (2) a complete response if not earlier made; (3) a statement that the entire period of delay in prosecution was unintentional; and (4) a terminal disclaimer and disclaimer fee. The requirement for a terminal disclaimer has been waived, as the petition was submitted before the mailing of the Notice of Abandonment.

Applicant's petition is **GRANTED.**

The application will be forwarded to Publications Branch to be issued into a Patent in due course.

Should there be any questions with respect to this decision, please contact Sandra Morris; by mail addressed to: Director, Technology Center 3700/2900, P.O. Box 1450, Alexandria, VA 22313-1450; or by telephone at (571) 272-2622.

John Kittle
Director, Technology Center 3700/2900

UNITED STATES PATENT AND TRADEMARK OFFICE

NOV 18 2004

Commissioner for Patents
United States Patent and Trademark Office
P.O. Box 1450
Alexandria, VA 22313-1450
www.uspto.gov

TROXELL LAW OFFICE PLLC
SUITE 1404
5205 LEESBURG PIKE
FALLS CHURCH VA 22041

In re Application of	:
I-Min Hsiao	:
Serial No.: 29/177,904	: PETITION DECISION
Filed: March 19, 2003	:
Attorney Docket No.: BHT-3326-26	:

This is a decision on applicant's Petition under 37 CFR 1.137(b) submitted September 8, 2004, to revive an unintentionally abandoned application.

This application became abandoned for failure to respond to the Notice of Allowance mailed May 7, 2004, which set a three-month statutory period to pay the Issue fee. As no reply was submitted by August 9, 2004, the application was abandoned. Applicant then filed this petition.

A grantable petition under 37 CFR 1.137(b), as revised December 1, 1997, requires four items: (1) a petition and petition fee; (2) a complete response if not earlier made; (3) a statement that the entire period of delay in prosecution was unintentional; and (4) a terminal disclaimer and disclaimer fee. The requirement for a terminal disclaimer has been waived, as the petition was submitted before the mailing of the Notice of Abandonment.

Applicant's petition is **GRANTED.**

The application will be forwarded to Publications Branch to be issued into a Patent in due course.

Should there be any questions with respect to this decision, please contact Sandra Morris; by mail addressed to: Director, Technology Center 3700/2900, P.O. Box 1450, Alexandria, VA 22313-1450; or by telephone at (571) 272-2622.

John Kittle
Director, Technology Center 3700/2900

UNITED STATES PATENT AND TRADEMARK OFFICE

SEP 24 2004

Commissioner for Patents
United States Patent and Trademark Office
P.O. Box 1450
Alexandria, VA 22313-1450
www.uspto.go

ARGENT FOX KINTNER PLOTKIN & KAHN
1050 CONNECTICUT AVE, NW
SUITE 400
WASHINGTON, DC 20036

In re Application of	:
Pontus Wahlgren	:
Serial No.: 29/177,964	: PETITION DECISION
Filed: March 20, 2003	:
Attorney Docket No.: 024397-00007	:

This is in response to applicant's Petition, which is being treated as a Petition to Request Withdraw of Holding of Abandonment under 37 CFR 1.181 submitted August 10, 2004, based on not having received the Office action.

This petition is **GRANTED.**

A review of the file history shows that the Office mailed a Notice of Allowance on August 6, 2003, setting a three-month period to pay the Issue fee. As no response was received, a Notice of Abandonment was mailed on August 4, 2004. This petition followed.

Applicant has submitted that the Notice of Allowance was never received, and has not submitted evidence, such as copies of the dockets records to show non-receipt of the Office action. However, it is clear from reviewing the file that the Notice of Allowance and Issue Fee Due was not properly mailed to applicant, due to an error by the Patent Office. The case is now returned to pending status, and the abandonment is thereby withdrawn.

The application will be promptly forwarded to the Examiner for remailing of the Notice of Allowance and Issue Fee Due.

Should there be any questions with respect to this decision, please contact Sandra Morris; by mail addressed to: Director, Technology Center 3700/2900, P.O. Box 1450, Alexandria, VA 22313-1450; or by telephone at (571) 272-2622.

John Kittle
Director, Technology Center 3700/2900

UNITED STATES PATENT AND TRADEMARK OFFICE

SEP 24 2004

Commissioner for Patents
United States Patent and Trademark Office
P.O. Box 1450
Alexandria, VA 22313-1450
www.uspto.go

ARGENT FOX KINTNER PLOTKIN & KAHN
1050 CONNECTICUT AVE, NW
SUITE 400
WASHINGTON, DC 20036

#6

In re Application of	:
Pontus Wahlgren	:
Serial No.: 29/177,965	: PETITION DECISION
Filed: March 20, 2003	:
Attorney Docket No.: 024397-00008	:

This is in response to applicant's Petition, which is being treated as a Petition to Request Withdraw of Holding of Abandonment under 37 CFR 1.181 submitted August 10, 2004, based on not having received the Office action.

This petition is **GRANTED.**

A review of the file history shows that the Office mailed a Notice of Allowance on October 31, 2003, setting a three-month time period to pay the Issue fee. As no response was received, a Notice of Abandonment was mailed on August 4, 2004. This petition followed.

Applicant has submitted that the Notice of Allowance was never received, and has not submitted evidence, such as copies of the dockets records to show non-receipt of the Office action. However, it is clear from reviewing the file that the Notice of Allowance and Issue Fee Due was not properly mailed to applicant, due to an error by the Patent Office. The case is now returned to pending status, and the abandonment is thereby withdrawn.

The application will be promptly forwarded to the Examiner for remailing of the Notice of Allowance and Issue Fee Due.

Should there be any questions with respect to this decision, please contact Sandra Morris; by mail addressed to: Director, Technology Center 3700/2900, P.O. Box 1450, Alexandria, VA 22313-1450; or by telephone at (571) 272-2622.

John Kittle
Director, Technology Center 3700/2900

UNITED STATES PATENT AND TRADEMARK OFFICE

Commissioner for Patents
United States Patent and Trademark Office
P.O. Box 1450
Alexandria, VA 22313-1450
www.uspto.gov

BAKER BOTTS LLP
30 ROCKEFELLER PLAZA
44TH FLOOR
NEW YORK, NY 10112-4498

COPY MAILED

OCT 27 2008

OFFICE OF PETITIONS

In re Patent No. D502318 :
Issue Date: March 1, 2005 :
Application No. 29/178,054 : NOTICE
Filed: March 20, 2003 :
Attorney Docket No. A35674-072841.0201

This is a notice regarding your request for acceptance of a fee deficiency submission under 37 CFR 1.28. On September 1, 1998, the Court of Appeals for the Federal Circuit held that 37 CFR 1.28(c) is the sole provision governing the time for correction of the erroneous payment of the issue fee as a small entity. **See DH Technology v. Synergystex International, Inc. 154 F.3d 1333, 47 USPQ2d 1865 (Fed. Cir. Sept. 1, 1998).**

The Office no longer investigates or rejects original or reissue applications under 37 CFR 1.56. **1098 Off. Gaz. Pat. Office 502 (January 3, 1989)**. Therefore, nothing in this Notice is intended to imply that an investigation was done.

Your fee deficiency submission under 37 CFR 1.28 is hereby **ACCEPTED**.

Inquiries related to this communication should be directed to Irvin Dingle at (571) 272-3210.

Irvin Dingle
Petitions Examiner
Office of Petitions

UNITED STATES PATENT AND TRADEMARK OFFICE

Commissioner for Patents
United States Patent and Trademark Office
P.O. Box 1450
Alexandria, VA 22313-1450
www.uspto.gov

BAKER BOTTS L.L.P.
30 ROCKEFELLER PLAZA
44TH FLOOR
NEW YORK, NY 10112-4498

COPY MAILED

SEP 2 9 2008

OFFICE OF PETITIONS

In re Patent No. D,511,410	:	
Issue Date: November 15, 2005	:	
Application No. 29/178,057	:	NOTICE
Filed: March 20, 2003	:	
Attorney Docket No. A35678 072841.0205	:	

This is a notice regarding your request for acceptance of a fee deficiency submission under 37 CFR 1.28.

The Office no longer investigates or rejects original or reissue patent under 37 CFR 1.56. **1098 Off. Gaz. Pat. Office 502 (January 3, 1989)**. Therefore, nothing in this Notice is intended to imply that an investigation was done.

Your fee deficiency submission under 37 CFR 1.28 is hereby **ACCEPTED**.

This patent is no longer entitled to small entity status. Accordingly, all future fees paid in this patent must be paid at the large entity rate.

Inquiries related to this communication should be directed to the undersigned at (571) 272-6059.

Alicia Kelley
Petitions Examiner
Office of Petitions

UNITED STATES PATENT AND TRADEMARK OFFICE

Commissioner for Patents
United States Patent and Trademark Office
P.O. Box 1450
Alexandria, VA 22313-1450
www.uspto.gov

BAKER BOTTS L.L.P.
30 ROCKEFELLER PLAZA
44TH FLOOR
NEW YORK, NY 10112-4498

COPY MAILED

SEP 2 9 2008

OFFICE OF PETITIONS

In re Patent No. D,513,559	:	
Issue Date: January 17, 2006	:	
Application No. 29/178,063	:	NOTICE
Filed: March 20, 2003	:	
Attorney Docket No. A35657-072841.0190	:	

This is a notice regarding your request for acceptance of a fee deficiency submission under 37 CFR 1.28.

The Office no longer investigates or rejects original or reissue patent under 37 CFR 1.56. **1098 Off. Gaz. Pat. Office 502 (January 3, 1989)**. Therefore, nothing in this Notice is intended to imply that an investigation was done.

Your fee deficiency submission under 37 CFR 1.28 is hereby **ACCEPTED**.

This patent is no longer entitled to small entity status. Accordingly, all future fees paid in this patent must be paid at the large entity rate.

Inquiries related to this communication should be directed to the undersigned at (571) 272-6059.

Alicia Kelley
Petitions Examiner
Office of Petitions

UNITED STATES PATENT AND TRADEMARK OFFICE

COMMISSIONER FOR PATENTS
UNITED STATES PATENT AND TRADEMARK OFFICE
P.O. BOX 1450
ALEXANDRIA, VA 22313-1450
www.uspto.gov

SAIDMAN DESIGNLAW GROUP
1110 BONIFANT STREET, SUITE 510
SILVER SPRING MD 20910

In re Application of
Kenta Shimoguchi
Serial No.: 29/178,091
Filed: March 20, 2003
Attorney Docket No.: 1612.077

: PETITION DECISION

This is in response to applicant's Petition to Withdraw the Holding of Abandonment under 37 CFR 1.181, filed January 7, 2004, based on not having to respond to the Office action.

A review of the file history shows that a Notice of Allowance was mailed February 10, 2004, setting a three month statutory period to pay the Issue fee, which was submitted April 6, 2004. On May 4, 2004, a Notice Regarding Drawings was sent to applicant, giving applicant two months to submit new formal drawings, as required on the enclosed form PTO-948. Upon failure to submit formal drawings by July 6, 2004, a Notice of Abandonment was mailed on December 14, 2004; this petition followed.

Applicant has stated that formal drawings were not submitted, as the requirement was withdrawn by the Draftsperson on May 11, 2004 in a revised PTO-948. This unfortunately was not entered into the application; the copy provided by applicant clearly shows that new drawings were not required, and the application was abandoned in error.

Applicant's petition is **GRANTED.**

The application will be promptly forwarded to Publications to be printed as a patent in due course.

Should there be any questions with respect to this decision, please contact Sandra Morris; by mail addressed to: Director, Technology Center 1700/2900, P.O. Box 1450, Alexandria, VA 22313-1450; or by telephone at (571) 272-2622.

Jacqueline Stone
Director, Technology Center 1700/2900

UNITED STATES PATENT AND TRADEMARK OFFICE

Commissioner for Patents
United States Patent and Trademark Office
P.O. Box 1450
Alexandria, VA 22313-1450
www.uspto.gov

JOSEPH SOFER
SOFER & HAROUN LLP
SUITE 910
317 MADISON AVENUE
NEW YORK NY 10017

COPY MAILED

NOV 29 2007

OFFICE OF PETITIONS

In re Application of	:	
Ruat, et al.	:	
Application No. 29/178,114	:	DECISION ON PETITION
Filed: March 20, 2003	:	
Attorney Docket No. 979-018	:	

This is a decision on the petition to revive the above-identified application under 37 CFR 1.137(b), filed August 6, 2007.

The petition is **DISMISSED.**

Any request for reconsideration of this decision must be submitted within TWO (2) MONTHS from the mail date of this decision. Extensions of time under 37 CFR 1.136(a) are permitted. The reconsideration request should include a cover letter entitled "Renewed Petition Under 37 CFR 1.137(b)." No further petition fee is due for a renewed petition. This is **not** a final agency decision within the meaning of 5 USC 704.

The above-identified application became abandoned for failure to timely file a response to the non-final Office action mailed May 3, 2005. This Office action set a shortened statutory period for reply of three (3) months. No reply having been received, the application became abandoned on August 4, 2005. A Notice of Abandonment was mailed on December 13, 2005.

A grantable petition under 37 CFR 1.137(b) must be accompanied by: (1) the required reply, unless previously filed; (2) the petition fee as set forth in 37 CFR 1.17(m); (3) a statement that the entire delay in filing the required reply from the due date for the reply until the filing of a grantable petition pursuant to 37 CFR 1.137(b) was unintentional; and (4) any terminal disclaimer (and fee as set forth in 37 CFR 1.20(d)) required by 37 CFR 1.137(d).

The instant petition lacks item (4). The instant application is a design application, and accordingly requires a terminal disclaimer and accompanying fee. See 37 CFR 1.137(d).

Further correspondence concerning this application should be addressed as follows:

By mail: Mail Stop Petitions
Commissioner for Patents
P.O. Box 1450
Alexandria VA 22313-1450

By FAX: (571)273-8300
Attn: Office of Petitions

Telephone inquiries concerning this decision should be directed to the undersigned at 571-272-3207.

Cliff Congo
Petitions Attorney
Office of Petitions

UNITED STATES PATENT AND TRADEMARK OFFICE

Commissioner for Patents
United States Patent and Trademark Office
P.O. Box 1450
Alexandria, VA 22313-1450
www.uspto.gov

JOSEPH SOFER
SOFER & HAROUN LLP
SUITE 910
317 MADISON AVENUE
NEW YORK NY 10017

COPY MAILED

APR 28 2008

OFFICE OF PETITIONS

In re Application of	:	
Ruat, et al.	:	
Application No. 29/178,114	:	DECISION ON PETITION
Filed: March 20, 2003	:	
Attorney Docket No. 979-018	:	

This is a decision on the renewed petition to revive the above application under 37 CFR 1.137(b), filed February 1, 2008.

The petition is **GRANTED**.

The above-identified application became abandoned for failure to timely file a response to the non-final Office action mailed May 3, 2005. This Office action set a shortened statutory period for reply of three (3) months. No reply having been received, the application became abandoned on August 4, 2005. A Notice of Abandonment was mailed on December 13, 2005. Applicants filed a petition to revive under 37 CFR 1.137(b) on August 6, 2007. However, the petition was dismissed in a decision mailed on November 29, 2007. The petition was dismissed because applicants did not submit a terminal disclaimer as required by 37 CFR 1.137(d).

With the instant petition, applicants submitted a terminal disclaimer. The other requirements for a grantable petition under 37 CFR 1.137(b) were previously met with the petition filed August 6, 2007.

The matter is being forwarded to Group Art Unit 2916 for consideration of the Amendment filed August 6, 2007.

Telephone inquiries concerning this decision should be directed to the undersigned at 571-272-3207.

Cliff Congo
Petitions Attorney
Office of Petitions

UNITED STATES PATENT AND TRADEMARK OFFICE

COMMISSIONER FOR PATENTS
UNITED STATES PATENT AND TRADEMARK OFFICE
P.O. BOX 1450
ALEXANDRIA, VA 22313-1450
www.uspto.gov

Paper No. 4

DORSEY & WHITNEY, LLP
INTELLECTUAL PROPERTY DEPARTMENT
370 SEVENTEENTH STREET
SUITE 4700
DENVER, CO 80202-5647

COPY MAILED

OCT 2 9 2003

OFFICE OF PETITIONS

In re Application of:
William V. Goodhue, Leo Warner
and Karen S. Herhold
Application No. 29/178,124
Filed: March 28, 2003
Title of Invention: PEARLESCENT
HONEYCOMB BLIND

DECISION REFUSING
STATUS UNDER
37 CFR 1.47(b)

This is in response to a petition under 37 CFR 1.47, filed September 8, 2003, to allow a person to whom an inventor has assigned or agreed in writing to assign the invention, or who otherwise shows sufficient proprietary interest in the matter justifying such action, to make application on behalf of and as agent for all inventors. The petition is properly treated under 37 CFR 1.47(b).

The petition is **dismissed**.

Rule 47 applicant is given TWO (2) MONTHS from the mailing date of this decision to reply, correcting the below-noted deficiencies. Any reply should be entitled "Request for Reconsideration of Petition Under 37 CFR 1.47(b)", and should only address the deficiencies noted below, except that the reply may include an oath or declaration executed by the non-signing inventor. Failure to respond will result in abandonment of the application. Any extensions of time will be governed by 37 CFR 1.136(a).

The above-identified application was filed on March 21, 2003, with an unexecuted oath or declaration. The unexecuted oath or declaration listed as the inventive entity inventors William V. Goodhue, Leo Warner and Karen S. Herhold. This Office mailed a Notice to File Missing Parts of Nonprovisional Application (hereinafter "Notice") on June 4, 2003, requiring, *inter alia*, a

properly signed oath or declaration and a late filing fee, oath or declaration and surcharge.

In response to the Notice, Applicant files the instant petition and unexecuted Declaration and Power of Attorney. This unexecuted Declaration and Power of Attorney lists as inventors Leo Warner and Karen S. Herhold. Applicant avers that the inventor refuses to join the application and cannot be reached after diligent effort.

It is initially noted that 37 CFR 1.47 provides for two separate and distinct circumstances to allow that application to proceed without the signature of the inventor(s). The first is where an inventor refuses to sign an application after having been presented with the application for signature, and the second is where an inventor cannot be found or reached after diligent effort. In this instance, Applicant avers that the whereabouts of the inventor(s) is known, but that the inventor(s) refuse to join the application.

A grantable petition under 37 CFR 1.47(b) requires: (1) proof that the non-signing inventor cannot be reached or refuses to sign the oath or declaration after having been presented with the application papers (specification, claims and drawings); (2) an acceptable oath or declaration in compliance with 35 U.S.C. §§ 115 and 116; (3) the petition fee; (4) a statement of the last known address of the non-signing inventor(s); (5) proof of proprietary interest; and (6) proof of irreparable harm. Applicant lacks items (2) and (5) and (6) as set forth above.

Petitioner is advised that 37 CFR 1.47(a) provides for two separate and distinct circumstances: one where the inventor refuses to join the application after having been presented with the application for signature, and the other where an inventor cannot be found or reached after diligent effort.

As to item (2), the Office notes that pursuant to Section 409.03(b)(A) of the Manuel for Patent Examining Procedure:

> Where a corporation is the 37 CFR 1.47(b) applicant, an officer (President, Vice-President, Secretary, Treasurer or Chief Executive Officer) thereof should normally sign the necessary oath or declaration. A corporation may authorize any person, including an

> attorney or agent registered to practice before the Patent and Trademark Office, to sign the application oath or declaration on its behalf. Where an oath or declaration is signed by a registered attorney or agent on behalf of a corporation, either proof of the attorney's or agent's authority in the form of a statement signed by an appropriate corporate officer must be submitted, or the attorney or agent may simply state that he or she is authorized to sign on behalf of the corporation. Where the oath or declaration is being signed on behalf of an assignee, see MPEP Section 324. An inventor may not authorize another individual to act as his or her agent to sign the application oath or declaration on his or her behalf. *Staeger v. Commissioner*, 189 USPQ 272 (D.D.C. 1976), *In re Striker*, 182 USPQ 507 (Comm'r Pat. 1973). Where an application is executed by one other than the inventor, the declaration required by 37 CFR 1.63 must state the full name, residence, post office address, and citizenship of the nonsigning inventor. Also, the title or position of the person signing must be stated if signing on behalf of a corporation under 37 CFR 1.47(b).

Applicant has not presented an oath or declaration for the patent application in compliance with 37 CFR 1.63 and 37 CFR 1.64. A properly executed oath or declaration is required.

As to item (5), applicant failed to show or provide proof that Hunter Douglas, Inc., has sufficient proprietary interest in the subject matter to justify the filing of the application (see MPEP 409.03(f)). Acceptable proof would include a copy of the employment agreement between the non-signing inventor and the Rule 47(b) applicant (company), a copy of an assignment agreement showing that the invention disclosed in the application is assigned to the Rule 47(b) applicant, or a legal memorandum signed by an attorney familiar with the law of the jurisdiction stating that a court of competent jurisdiction would by the weight of authority in that jurisdiction award the title of the invention to the Rule 47(b) applicant.

As to item (6), Rule 47 applicant failed to provide proof of irreparable damage (see MPEP 409.03(g)). A statement by Rule 47

applicant that the filing is necessary to preserve the rights of the parties would be sufficient.

Further correspondence with respect to this matter should be addressed as follows:

By mail: Commissioner for Patents
PO Box 1450
Alexandria, VA 22313-1450

By FAX: (703) 308-6916
Attn: Office of Petitions

By hand: Crystal Plaza Four, Suite 3C23
2201 S. Clark Place
Arlington, VA 22202-3113

Telephone inquiries concerning this decision should be directed to the undersigned at (703) 305-0014.

Derek L. Woods
Petitions Attorney
Office of Petitions

UNITED STATES PATENT AND TRADEMARK OFFICE

COMMISSIONER FOR PATENTS
UNITED STATES PATENT AND TRADEMARK OFFICE
P.O. BOX 1450
ALEXANDRIA, VA 22313-1450
www.uspto.go

Paper No. 6

DORSEY & WHITNEY, LLP
INTELLECTUAL PROPERTY DEPARTMENT
370 SEVENTEENTH STREET
SUITE 4700
DENVER, CO 80202-5647

COPY MAILED
MAR 17 2004
OFFICE OF PETITIONS

In re Application of:
William V. Goodhue, Leo Warner
and Karen S. Herhold
Application No. 29/178,124
Filed: March 28, 2003
Title of Invention: PEARLESCENT
HONEYCOMB BLIND

DECISION REFUSING
STATUS UNDER
37 CFR 1.47(b)

This is in response to a Request for Reconsideration of Petition under 37 CFR 1.47(b), filed February 27, 2004, to allow a person to whom an inventor has assigned or agreed in writing to assign the invention, or who otherwise shows sufficient proprietary interest in the matter justifying such action, to make application on behalf of and as agent for all inventors.

The petition is **dismissed**.

Rule 47 applicant is given TWO (2) MONTHS from the mailing date of this decision to reply, correcting the below-noted deficiencies. Any reply should be entitled "Request for Reconsideration of Petition Under 37 CFR 1.47(b)", and should only address the deficiencies noted below, except that the reply may include an oath or declaration executed by the non-signing inventor. Failure to respond will result in abandonment of the application. Any extensions of time will be governed by 37 CFR 1.136(a).

The above-identified application was filed on March 21, 2003, with an unexecuted oath or declaration. The unexecuted oath or declaration listed as the inventive entity inventors William V. Goodhue, Leo Warner and Karen S. Herhold. This Office mailed a Notice to File Missing Parts of Nonprovisional Application (hereinafter "Notice") on June 4, 2003, requiring, *inter alia*, a

properly signed oath or declaration and a late filing fee, oath or declaration and surcharge.

In response to the Notice, Applicant filed a petition and unexecuted Declaration and Power of Attorney. This unexecuted Declaration and Power of Attorney listed as inventors Leo Warner and Karen S. Herhold.

The petition was dismissed in a Decision mailed October 29, 2003. The Decision dismissing the petition required a properly executed oath or declaration, proof that Applicant has sufficient proprietary interest in the subject matter to justify the filing of the application, and a statement by Applicant that the filing is necessary to preserve the rights of the parties would be sufficient.

Applicant responds with the instant petition; a Declaration listing as the inventor Richard C. Gottuso, and executed by Mr. Gottuso as a person authorized to act on behalf of the assignee [Accord 37 CFR 3.73(b)(2)(ii)]; a copy of assignment documents executed by the nonsigning inventors as proof that Applicant has sufficient proprietary interest in the subject matter to justify the filing of the application, and a statement by Applicant that the filing is necessary to preserve the rights of the parties.

A grantable petition under 37 CFR 1.47(b) requires: (1) proof that the non-signing inventor cannot be reached or refuses to sign the oath or declaration after having been presented with the application papers (specification, claims and drawings); (2) an acceptable oath or declaration in compliance with 35 U.S.C. §§ 115 and 116; (3) the petition fee; (4) a statement of the last known address of the non-signing inventor(s); (5) proof of proprietary interest; and (6) proof of irreparable harm. Applicant lacks item (2) as set forth above.

As to item (2), the Office notes that pursuant to Section 409.03(b)(A) of the Manuel for Patent Examining Procedure:

> Where an application is executed by one other than the inventor, the declaration required by 37 CFR 1.63 must state the full name, residence, post office address, and citizenship of the nonsigning inventor. Also, the title or position of the person signing

must be stated if signing on behalf of a corporation under 37 CFR 1.47(b).

Applicant must list the full name, residence, post office address, and citizenship of the all inventors, signing and/or nonsigning, on the Declaration, and have the declaration executed by the person authorized to act on behalf of the company, listing the title or position of the person signing the Declaration on behalf of the company. A properly executed oath or declaration is required.

Further correspondence with respect to this matter should be addressed as follows:

By mail: Commissioner for Patents
PO Box 1450
Alexandria, VA 22313-1450

By FAX: (703) 872-9306
Attn: Office of Petitions

By hand: 2201 South Clark Place
Customer Window
Crystal Plaza Two, Lobby Room 1B03
Arlington, VA 22202

Telephone inquiries concerning this matter should be directed to the undersigned at (703) 305-0014.

Derek L. Woods
Petitions Attorney
Office of Petitions

UNITED STATES PATENT AND TRADEMARK OFFICE

COMMISSIONER FOR PATENTS
UNITED STATES PATENT AND TRADEMARK OFFICE
P.O. BOX 1450
ALEXANDRIA, VA 22313-1450
www.uspto.gov

Paper No.

COPY MAILED

JUL 29 2004

OFFICE OF PETITIONS

DORSEY & WHITNEY, LLP
INTELLECTUAL PROPERTY DEPARTMENT
370 SEVENTEENTH STREET
SUITE 4700
DENVER, CO 80202-5647

In re Application of:	:	
Karen S. Herhold and Leo Warner	:	
Application No. 29/178,124	:	DECISION GRANTING
Filed: March 28, 2003	:	STATUS UNDER
Title of Invention: PEARLESCENT	:	37 CFR 1.47(b)
HONEYCOMB BLIND	:	

This is in response to a Request for Reconsideration of Petition under 37 CFR 1.47(b), filed March 30, 2004, to allow a person to whom an inventor has assigned or agreed in writing to assign the invention, or who otherwise shows sufficient proprietary interest in the matter justifying such action, to make application on behalf of and as agent for all inventors.

The petition is **granted**.

The above-identified application and papers have been reviewed and found in compliance with 37 CFR 1.47(b). This application is hereby accorded Rule 1.47(b) status.

Petitioner has shown that the non-signing inventors, Karen S. Herhold and Leo Warner, refuse to join in the application.

As provided in Rule 1.47(b), this Office will forward notice of this application's filing to the non-signing inventors at the addresses given in the Petition. Notice of the filing of this application will also be published in the Official Gazette.

The application file is being returned to the Office of Initial Patent Examination for continued processing.

Telephone inquiries related to this decision may be directed to the undersigned at (703) 305-0014.

Derek L. Woods
Petitions Attorney
Office of Petitions

UNITED STATES PATENT AND TRADEMARK OFFICE

COMMISSIONER FOR PATENTS
UNITED STATES PATENT AND TRADEMARK OFFICE
P.O. BOX 1450
ALEXANDRIA, VA 22313-1450
www.uspto.gov

Ms. Karen S. Herhold
7520 ELM STREET
LONGMONT, CO 80504

COPY MAILED

JUL 29 2004

OFFICE OF PETITIONS

In re Application of: :
Karen S. Herhold and Leo Warner :
Application No. 29/178,124 : LETTER
Filed: March 28, 2003 :
Title of Invention: PEARLESCENT :
HONEYCOMB BLIND :

Dear Ms. Herhold:

You are named as an inventor in the above-identified United States patent application filed under the provisions of 35 U.S.C. 116 (United States Code) and 37 CFR 1.47(b), Rules of Practice in Patent Cases. Should a patent be granted on the application you will be designated therein as the inventor.

As a named inventor you are entitled to inspect any paper in the file wrapper of the application, order copies of all or any part thereof (at a prepaid cost per 37 CFR 1.19) or make your position of record in the application. Alternatively, you may arrange to do any of the preceding through a registered patent attorney or agent presenting written authorization from you. If you care to join the application, counsel of record (see below) would presumably assist you. Joining in the application would entail the filing of an appropriate oath or declaration by you pursuant to 37 CFR 1.63.

Telephone inquiries regarding this communication should be directed to the undersigned at (703) 305-0014. Requests for information regarding your application should be directed to the File Information Unit at (703) 308-2733. Information regarding how to pay for and order a copy of the application, or a specific paper in the application, should be directed to Certification Division at (703) 308-9726 or 1-800-972-6382 (outside the Washington D.C. area).

Derek L. Woods
Petitions Attorney
Office of Petitions

cc: DORSEY & WHITNEY, LLP
INTELLECTUAL PROPERTY DEPARTMENT
370 SEVENTEENTH STREET
SUITE 4700
DENVER, CO 80202-5647

UNITED STATES PATENT AND TRADEMARK OFFICE

COMMISSIONER FOR PATENTS
UNITED STATES PATENT AND TRADEMARK OFFICE
P.O. BOX 1450
ALEXANDRIA, VA 22313-1450
www.uspto.gov

Mr. Leo Warner
7520 ELM STREET
LONGMONT, CO 80504

COPY MAILED

JUL 2 9 2004

OFFICE OF PETITIONS

In re Application of: :
Karen S. Herhold and Leo Warner :
Application No. 29/178,124 : LETTER
Filed: March 28, 2003 :
Title of Invention: PEARLESCENT :
HONEYCOMB BLIND :

Dear Mr. Warner:

You are named as an inventor in the above-identified United States patent application filed under the provisions of 35 U.S.C. 116 (United States Code) and 37 CFR 1.47(b), Rules of Practice in Patent Cases. Should a patent be granted on the application you will be designated therein as the inventor.

As a named inventor you are entitled to inspect any paper in the file wrapper of the application, order copies of all or any part thereof (at a prepaid cost per 37 CFR 1.19) or make your position of record in the application. Alternatively, you may arrange to do any of the preceding through a registered patent attorney or agent presenting written authorization from you. If you care to join the application, counsel of record (see below) would presumably assist you. Joining in the application would entail the filing of an appropriate oath or declaration by you pursuant to 37 CFR 1.63.

Telephone inquiries regarding this communication should be directed to the undersigned at (703) 305-0014. Requests for information regarding your application should be directed to the File Information Unit at (703) 308-2733. Information regarding how to pay for and order a copy of the application, or a specific paper in the application, should be directed to Certification Division at (703) 308-9726 or 1-800-972-6382 (outside the Washington D.C. area).

Derek L. Woods
Petitions Attorney
Office of Petitions

cc: DORSEY & WHITNEY, LLP
INTELLECTUAL PROPERTY DEPARTMENT
370 SEVENTEENTH STREET
SUITE 4700
DENVER, CO 80202-5647

UNITED STATES PATENT AND TRADEMARK OFFICE

COMMISSIONER FOR PATENTS
UNITED STATES PATENT AND TRADEMARK OFFICE
P.O. BOX 1450
ALEXANDRIA, VA 22313-1450
www.uspto.gov

Paper No. 4

DORSEY & WHITNEY, LLP
INTELLECTUAL PROPERTY DEPARTMENT
370 SEVENTEENTH STREET
SUITE 4700
DENVER, CO 80202-5647

COPY MAILED

OCT 29 2003

OFFICE OF PETITIONS

In re Application of:	:	
William V. Goodhue, Leo Warner	:	
and Karen S. Herhold	:	
Application No. 29/178,143	:	DECISION REFUSING
Filed: March 28, 2003	:	STATUS UNDER
Title of Invention: PEARLESCENT	:	37 CFR 1.47(b)
HONEYCOMB BLIND		

This is in response to a petition under 37 CFR 1.47, filed September 8, 2003, to allow a person to whom an inventor has assigned or agreed in writing to assign the invention, or who otherwise shows sufficient proprietary interest in the matter justifying such action, to make application on behalf of and as agent for all inventors. The petition is properly treated under 37 CFR 1.47(b).

The petition is **dismissed**.

Rule 47 applicant is given TWO (2) MONTHS from the mailing date of this decision to reply, correcting the below-noted deficiencies. Any reply should be entitled "Request for Reconsideration of Petition Under 37 CFR 1.47(b)", and should only address the deficiencies noted below, except that the reply may include an oath or declaration executed by the non-signing inventor. Failure to respond will result in abandonment of the application. Any extensions of time will be governed by 37 CFR 1.136(a).

The above-identified application was filed on March 21, 2003, with an unexecuted oath or declaration. The unexecuted oath or declaration listed as the inventive entity inventors William V. Goodhue, Leo Warner and Karen S. Herhold. This Office mailed a Notice to File Missing Parts of Nonprovisional Application (hereinafter "Notice") on June 4, 2003, requiring, *inter alia*, a

properly signed oath or declaration and a late filing fee, oath or declaration and surcharge.

In response to the Notice, Applicant files the instant petition and unexecuted Declaration and Power of Attorney. This unexecuted Declaration and Power of Attorney lists as inventors Leo Warner and Karen S. Herhold. Applicant avers that the inventor refuses to join the application and cannot be reached after diligent effort.

It is initially noted that 37 CFR 1.47 provides for two separate and distinct circumstances to allow that application to proceed without the signature of the inventor(s). The first is where an inventor refuses to sign an application after having been presented with the application for signature, and the second is where an inventor cannot be found or reached after diligent effort. In this instance, Applicant avers that the whereabouts of the inventor(s) is known, but that the inventor(s) refuse to join the application.

A grantable petition under 37 CFR 1.47(b) requires: (1) proof that the non-signing inventor cannot be reached or refuses to sign the oath or declaration after having been presented with the application papers (specification, claims and drawings); (2) an acceptable oath or declaration in compliance with 35 U.S.C. §§ 115 and 116; (3) the petition fee; (4) a statement of the last known address of the non-signing inventor(s); (5) proof of proprietary interest; and (6) proof of irreparable harm. Applicant lacks items (2) and (5) and (6) as set forth above.

Petitioner is advised that 37 CFR 1.47(a) provides for two separate and distinct circumstances: one where the inventor refuses to join the application after having been presented with the application for signature, and the other where an inventor cannot be found or reached after diligent effort.

As to item (2), the Office notes that pursuant to Section 409.03(b)(A) of the Manuel for Patent Examining Procedure:

> Where a corporation is the 37 CFR 1.47(b) applicant, an officer (President, Vice-President, Secretary, Treasurer or Chief Executive Officer) thereof should normally sign the necessary oath or declaration. A corporation may authorize any person, including an

> attorney or agent registered to practice before the Patent and Trademark Office, to sign the application oath or declaration on its behalf. Where an oath or declaration is signed by a registered attorney or agent on behalf of a corporation, either proof of the attorney's or agent's authority in the form of a statement signed by an appropriate corporate officer must be submitted, or the attorney or agent may simply state that he or she is authorized to sign on behalf of the corporation. Where the oath or declaration is being signed on behalf of an assignee, see MPEP Section 324. An inventor may not authorize another individual to act as his or her agent to sign the application oath or declaration on his or her behalf. *Staeger v. Commissioner*, 189 USPQ 272 (D.D.C. 1976), *In re Striker*, 182 USPQ 507 (Comm'r Pat. 1973). Where an application is executed by one other than the inventor, the declaration required by 37 CFR 1.63 must state the full name, residence, post office address, and citizenship of the nonsigning inventor. Also, the title or position of the person signing must be stated if signing on behalf of a corporation under 37 CFR 1.47(b).

Applicant has not presented an oath or declaration for the patent application in compliance with 37 CFR 1.63 and 37 CFR 1.64. A properly executed oath or declaration is required.

As to item (5), applicant failed to show or provide proof that Hunter Douglas, Inc., has sufficient proprietary interest in the subject matter to justify the filing of the application (see MPEP 409.03(f)). Acceptable proof would include a copy of the employment agreement between the non-signing inventor and the Rule 47(b) applicant (company), a copy of an assignment agreement showing that the invention disclosed in the application is assigned to the Rule 47(b) applicant, or a legal memorandum signed by an attorney familiar with the law of the jurisdiction stating that a court of competent jurisdiction would by the weight of authority in that jurisdiction award the title of the invention to the Rule 47(b) applicant.

As to item (6), Rule 47 applicant failed to provide proof of irreparable damage (see MPEP 409.03(g)). A statement by Rule 47

applicant that the filing is necessary to preserve the rights of the parties would be sufficient.

Further correspondence with respect to this matter should be addressed as follows:

By mail: Commissioner for Patents
PO Box 1450
Alexandria, VA 22313-1450

By FAX: (703) 308-6916
Attn: Office of Petitions

By hand: Crystal Plaza Four, Suite 3C23
2201 S. Clark Place
Arlington, VA 22202-3113

Telephone inquiries concerning this decision should be directed to the undersigned at (703) 305-0014.

Derek L. Woods
Petitions Attorney
Office of Petitions

UNITED STATES PATENT AND TRADEMARK OFFICE

COMMISSIONER FOR PATENTS
UNITED STATES PATENT AND TRADEMARK OFFICE
P.O. BOX 1450
ALEXANDRIA, VA 22313-1450
www.uspto.gov

Paper No. 6

DORSEY & WHITNEY, LLP
INTELLECTUAL PROPERTY DEPARTMENT
370 SEVENTEENTH STREET
SUITE 4700
DENVER, CO 80202-5647

COPY MAILED
APR 15 2004
OFFICE OF PETITIONS

In re Application of:	:	
William V. Goodhue, Leo Warner	:	
and Karen S. Herhold	:	
Application No. 29/178,143	:	DECISION DISMISSING
Filed: March 28, 2003	:	PETITION UNDER
Title of Invention: PEARLESCENT	:	37 CFR 1.47(b)
HONEYCOMB BLIND		

This is in response to a Request for Reconsideration of Petition under 37 CFR 1.47(b), filed February 27, 2004, to allow a person to whom an inventor has assigned or agreed in writing to assign the invention, or who otherwise shows sufficient proprietary interest in the matter justifying such action, to make application on behalf of and as agent for all inventors. The two (2) month extension of time request is hereby granted.

The petition is **dismissed**.

Rule 47 applicant is given TWO (2) MONTHS from the mailing date of this decision to reply, correcting the below-noted deficiencies. Any reply should be entitled "Request for Reconsideration of Petition Under 37 CFR 1.47(b)", and should only address the deficiencies noted below, except that the reply may include an oath or declaration executed by the non-signing inventor. Failure to respond will result in abandonment of the application. Any extensions of time will be governed by 37 CFR 1.136(a).

The above-identified application was filed on March 21, 2003, with an unexecuted oath or declaration. The unexecuted oath or declaration listed as the inventive entity inventors William V. Goodhue, Leo Warner and Karen S. Herhold. This Office mailed a Notice to File Missing Parts of Nonprovisional Application (hereinafter "Notice") on June 4, 2003, requiring, *inter alia*, a

properly signed oath or declaration and a late filing fee, oath or declaration and surcharge.

In response to the Notice, Applicant filed a petition and unexecuted Declaration and Power of Attorney. This unexecuted Declaration and Power of Attorney listed as inventors Leo Warner and Karen S. Herhold. Applicant avers that the inventor refuses to join the application and cannot be reached after diligent effort.

That petition was dismissed by this Office in a Decision mailed October 29, 2003. Applicant was required to file an acceptable oath or declaration; to provide proof of proprietary interest and proof of irreparable harm.

Applicant responds with the instant request for reconsideration and proof of proprietary interest and proof of irreparable harm.

A grantable petition under 37 CFR 1.47(b) requires: (1) proof that the non-signing inventor cannot be reached or refuses to sign the oath or declaration after having been presented with the application papers (specification, claims and drawings); (2) an acceptable oath or declaration in compliance with 35 U.S.C. §§ 115 and 116; (3) the petition fee; (4) a statement of the last known address of the non-signing inventor(s); (5) proof of proprietary interest; and (6) proof of irreparable harm. Applicant lacks item (2) as set forth above.

As to item (2), the Office again notes that pursuant to Section 409.03(b)(A) of the Manuel for Patent Examining Procedure, in relevant part:

> Where an application is executed by one other than the inventor, the declaration required by 37 CFR 1.63 must state the full name, residence, post office address, and citizenship of the nonsigning inventor. Also, the title or position of the person signing must be stated if signing on behalf of a corporation under 37 CFR 1.47(b).

Applicant has not presented an oath or declaration for the patent application in compliance with 37 CFR 1.63 and 37 CFR 1.64. The oath or declaration must identify the inventive

entity and title or position of the person signing. Here, the inventive entity has been excluded from the declaration. A properly executed oath or declaration is required that lists all of the inventors and is signed by the person with authority to sign the declaration on behalf of the company. The title or position of the person signing on behalf of the company must also be included on the declaration.

Further correspondence with respect to this matter should be addressed as follows:

By mail: Commissioner for Patents
PO Box 1450
Alexandria, VA 22313-1450

By FAX: (703) 872-9306
Attn: Office of Petitions

By hand: 2201 South Clark Place
Customer Window
Crystal Plaza Two, Lobby Room 1B03
Arlington, VA 22202

Telephone inquiries concerning this decision should be directed to the undersigned at (703) 305-0014.

Derek L. Woods
Petitions Attorney
Office of Petitions

UNITED STATES PATENT AND TRADEMARK OFFICE

COMMISSIONER FOR PATENTS
UNITED STATES PATENT AND TRADEMARK OFFICE
P.O. BOX 1450
ALEXANDRIA, VA 22313-1450
www.uspto.gov

Paper No. 9

DORSEY & WHITNEY, LLP
INTELLECTUAL PROPERTY DEPARTMENT
370 SEVENTEENTH STREET
SUITE 4700
DENVER, CO 80202-5647

COPY MAILED

JUL 2 9 2004

OFFICE OF PETITIONS

In re Application of:	:	
Karen S. Herhold and Leo Warner	:	
Application No. 29/178,143	:	DECISION GRANTING
Filed: March 28, 2003	:	STATUS UNDER
Title of Invention: PEARLESCENT	:	37 CFR 1.47(b)
HONEYCOMB BLIND	:	

This is in response to a Request for Reconsideration of Petition under 37 CFR 1.47(b), filed July 15, 2004, to allow a person to whom an inventor has assigned or agreed in writing to assign the invention, or who otherwise shows sufficient proprietary interest in the matter justifying such action, to make application on behalf of and as agent for all inventors.

The petition is **granted**.

The above-identified application and papers have been reviewed and found in compliance with 37 CFR 1.47(b). This application is hereby accorded Rule 1.47(b) status.

Petitioner has shown that the non-signing inventors, Karen S. Herhold and Leo Warner, refuse to join in the application.

As provided in Rule 1.47(b), this Office will forward notice of this application's filing to the non-signing inventors at the addresses given in the Petition. Notice of the filing of this application will also be published in the Official Gazette.

The application file is being returned to the Office of Initial Patent Examination for continued processing.

Telephone inquiries related to this decision may be directed to the undersigned at (703) 305-0014.

Derek L. Woods
Petitions Attorney
Office of Petitions

UNITED STATES PATENT AND TRADEMARK OFFICE

COMMISSIONER FOR PATENTS
UNITED STATES PATENT AND TRADEMARK OFFICE
P.O. BOX 1450
ALEXANDRIA, VA 22313-1450
www.uspto.gov

Ms. Karen S. Herhold
7520 ELM STREET
LONGMONT, CO 80504

COPY MAILED

JUL 2 9 2004

OFFICE OF PETITIONS

In re Application of: :
Karen S. Herhold and Leo Warner :
Application No. 29/178,143 : LETTER
Filed: March 28, 2003 :
Title of Invention: PEARLESCENT :
HONEYCOMB BLIND :

Dear Ms. Herhold:

You are named as an inventor in the above-identified United States patent application filed under the provisions of 35 U.S.C. 116 (United States Code) and 37 CFR 1.47(b), Rules of Practice in Patent Cases. Should a patent be granted on the application you will be designated therein as the inventor.

As a named inventor you are entitled to inspect any paper in the file wrapper of the application, order copies of all or any part thereof (at a prepaid cost per 37 CFR 1.19) or make your position of record in the application. Alternatively, you may arrange to do any of the preceding through a registered patent attorney or agent presenting written authorization from you. If you care to join the application, counsel of record (see below) would presumably assist you. Joining in the application would entail the filing of an appropriate oath or declaration by you pursuant to 37 CFR 1.63.

Telephone inquiries regarding this communication should be directed to the undersigned at (703) 305-0014. Requests for information regarding your application should be directed to the File Information Unit at (703) 308-2733. Information regarding how to pay for and order a copy of the application, or a specific paper in the application, should be directed to Certification Division at (703) 308-9726 or 1-800-972-6382 (outside the Washington D.C. area).

Derek L. Woods
Petitions Attorney
Office of Petitions

cc: DORSEY & WHITNEY, LLP
INTELLECTUAL PROPERTY DEPARTMENT
370 SEVENTEENTH STREET
SUITE 4700
DENVER, CO 80202-5647

UNITED STATES PATENT AND TRADEMARK OFFICE

COMMISSIONER FOR PATENTS
UNITED STATES PATENT AND TRADEMARK OFFICE
P.O. BOX 1450
ALEXANDRIA, VA 22313-1450
www.uspto.gov

Mr. Leo Warner
7520 ELM STREET
LONGMONT, CO 80504

COPY MAILED

JUL 2 9 2004

OFFICE OF PETITIONS

In re Application of:	:	
Karen S. Herhold and Leo Warner	:	
Application No. 29/178,143	:	LETTER
Filed: March 28, 2003	:	
Title of Invention: PEARLESCENT	:	
HONEYCOMB BLIND	:	

Dear Mr. Warner:

You are named as an inventor in the above-identified United States patent application filed under the provisions of 35 U.S.C. 116 (United States Code) and 37 CFR 1.47(b), Rules of Practice in Patent Cases. Should a patent be granted on the application you will be designated therein as the inventor.

As a named inventor you are entitled to inspect any paper in the file wrapper of the application, order copies of all or any part thereof (at a prepaid cost per 37 CFR 1.19) or make your position of record in the application. Alternatively, you may arrange to do any of the preceding through a registered patent attorney or agent presenting written authorization from you. If you care to join the application, counsel of record (see below) would presumably assist you. Joining in the application would entail the filing of an appropriate oath or declaration by you pursuant to 37 CFR 1.63.

Telephone inquiries regarding this communication should be directed to the undersigned at (703) 305-0014. Requests for information regarding your application should be directed to the File Information Unit at (703) 308-2733. Information regarding how to pay for and order a copy of the application, or a specific paper in the application, should be directed to Certification Division at (703) 308-9726 or 1-800-972-6382 (outside the Washington D.C. area).

Derek L. Woods
Petitions Attorney
Office of Petitions

cc: DORSEY & WHITNEY, LLP
INTELLECTUAL PROPERTY DEPARTMENT
370 SEVENTEENTH STREET
SUITE 4700
DENVER, CO 80202-5647

UNITED STATES PATENT AND TRADEMARK OFFICE

Commissioner for Patents
United States Patent and Trademark Office
P.O. Box 1450
Alexandria, VA 22313-1450
www.uspto.gov

3M INNOVATIVE PROPERTIES COMPANY
P O BOX 33427
ST. PAUL, MN 55133-3427

COPY MAILED
AUG 16 2004
OFFICE OF PETITIONS

In re Application of	:	
Robert D. Kampfer	:	
Application No. 29/178,151	:	DECISION ON PETITION
Filed: March 21, 2003	:	UNDER 37 CFR 1.313(c)(2)
Attorney Docket No. 58409US002	:	

This is a decision on the petition, filed July 2, 2004, under 37 CFR 1.313(c)(2) to withdraw the above-identified application from issue after payment of the issue fee.

The petition is **DISMISSED**.

Petitioner requests that the above-identified application be withdrawn from issue for consideration of a submission (Information Disclosure Statement) under 37 CFR 1.114 (request for continued examination).

The filing of a request for continued examination is improper since the provisions of 37 CFR 1.114 do not apply to design applications.[1] However, the filing of a continued prosecution application (CPA) pursuant to the provisions of 37 CFR 1.53(d) would be appropriate in the instant application in order to have the application withdrawn from issue for consideration of an Information Disclosure Statement after payment of the issue fee.

In view of the above, petitioner must submit a request for a CPA pursuant to the provisions of 37 CFR 1.53(d) if it is desired to have this application withdrawn from issue. Petitioner is reminded that the filing of a request for a CPA must be received and the petition to withdraw from issue granted prior to the issuance of this application into a patent.[2] If petitioner desires to pursue withdrawal of this application from issue, **a**

---

[1] *Note* 1271 OG 143 (June 24, 2003) and 68 Fed. Reg. 32376 (May 30, 2003).

[2] *Note* 37 CFR 1.313(d).

renewed petition under 37 CFR 1.313(c)(3), along with a request for a CPA under 37 CFR 1.53(d), must be submitted.

Further correspondence with respect to this matter should be addressed as follows:

By mail: Mail Stop PETITIONS
Commissioner for Patents
Post Office Box 1450
Alexandria, VA 22313-1450

By hand: Customer Window located at:

U.S. Patent and Trademark Office
220 20th Street S
Customer Window, Mail Stop Petitions
Crystal Plaza Two Lobby, Room 1B03
Arlington, VA 22202

By fax: (703) 872-9306[3]
ATTN: Office of Petitions

In order to expedite processing of the renewed petition to withdraw from issue, petitioner may wish to transmit the renewed petition and CPA by facsimile to telephone number 703-305-4257.

Any questions concerning this matter may be directed to the undersigned at (703) 305-8680.

Frances Hicks

Frances Hicks
Petitions Examiner
Office of Petitions
Office of the Deputy Commissioner
for Patent Examination Policy

---

[3] Effective approximately September 28, 2004, the facsimile number will be 571-273-0025, which is when the Office of Petitions expects to move to the new quarters in Alexandria, Virginia. However, this number is not to be used for submitting formal papers, but merely is to be used for receiving courtesy and informal papers and petitions to withdraw from issue only. Courtesy and informal papers will not be made a part of the file record.

UNITED STATES PATENT AND TRADEMARK OFFICE

Commissioner for Patents
United States Patent and Trademark Office
P.O. Box 1450
Alexandria, VA 22313-1450
www.uspto.gov

3M INNOVATIVE PROPERTIES COMPANY
P O BOX 33427
ST. PAUL, MN 66133-3427

COPY MAILED

SEP 0 7 2004

OFFICE OF PETITIONS

In re Application of	:	
Robert D. Kampfer	:	
Application No. 29/178,151	:	DECISION GRANTING PETITION
Filed: March 21, 2003	:	UNDER 37 CFR 1.313(c)(3)
Attorney Docket No. 58409US002	:	

This is a decision on the petition under 37 CFR 1.313(c)(2), filed August 30, 2004, which is being treated as a petition under 37 CFR 1.313(c)(3) to withdraw the above-identified application from issue after payment of the issue fee

The petition is **GRANTED**.

The above-identified application is hereby withdrawn from issue in favor of a continued prosecution application (CPA) under 37 CFR 1.53(d), filed of even date.

Petitioner is advised that the issue fee paid on July 2, 2004 in the parent application is not refundable nor can it be applied towards any new Notice of Allowance which may issue on the CPA filed August 30, 2004.

Telephone inquiries should be directed to the undersigned at (703) 305-8680.

The application is being forwarded to Technology Center AU 2914 for processing of the CPA and consideration of the Information Disclosure Statement.

Frances Hicks

Frances Hicks
Petitions Examiner
Office of Petitions
Office of the Deputy Commissioner
for Patent Examination Policy

UNITED STATES PATENT AND TRADEMARK OFFICE

COMMISSIONER FOR PATENTS
UNITED STATES PATENT AND TRADEMARK OFFICE
P.O. BOX 1450
ALEXANDRIA, VA 22313-1450
www.uspto.gov

6/24/05

F. Brad Salcedo
A&E Products Group LP
900 Apollo Road
Eagan MN 55121

In re Application of
Susan Ann Glander
Serial No.: 29/178,155
Filed: July 29, 2003
Attorney Docket No.: 26208

: PETITION DECISION

This is a decision on applicant's Request for Withdrawing of Abandonment under 37 CFR 1.181, filed on February 24, 2005 to revive an unintentionally abandoned application. A copy is also being sent to Daniel Daisak of Tyco Plastics and Adhesives, who submitted the petition.

The petition is **DISMISSED**.

A review of the file history shows that the Office mailed a Notice of Allowance to applicant on August 26, 2004, giving applicant a three-month shortened statutory period in which to submit the Issue fee and formal drawings. As no response was submitted by November 26, 2004, a Notice of Abandonment was mailed January 20, 2005; this petition followed.

Applicant has stated no response was submitted, as applicant never received the Notice of Allowance, but has not submitted any evidence to support this. The Notice was mailed to F. Brad Salcedo of A & E Products Group, and not the address on the petition. A Change of Address was not received from the Office; nor is attorney Daniel Daisak of record in the application. Therefore, as the Office mailed the Notice to the address on record, and no response was received, the application was properly abandoned.

> M.P.E.P. 711.03(c) gives appropriate guidance as to how to proceed when an Office action is not received. To establish non-receipt of an Office action, applicant must include a statement, attesting to the fact that applicant did not receive the communication, the showing required to establish non-receipt of an Office communication must include a statement from the practitioner stating that the Office communication was not received by the practitioner and attesting to the fact that a search of the file jacket and docket records indicates that the Office communication was not received. A copy of the docket record where the non-received Office communication would have been entered had it been received and docketed must be attached to and referenced in practitioner's statement. See Notice entitled "Withdrawing the Holding of Abandonment When Office Actions Are Not Received," 1156 O.G. 53 (November 16, 1993).
>
> The showing outlined above may not be sufficient if there are circumstances that point to a conclusion that the Office action may have been lost after receipt rather than a conclusion that the Office action was lost in the mail (e.g., if the practitioner has a history of not receiving Office actions). Evidence of non-receipt of an Office communication or

action (e.g., Notice of Abandonment or an advisory action) other than that action to which reply was required to avoid abandonment would not warrant withdrawal of the holding of abandonment.

If applicant can prove that the Notice was not received at the Eagan MN address, or that a Change of Address was submitted to the Office **prior** to the mailing of the Notice of Allowance, then a Petition under 37 CFR 1.181 will be granted. Applicant may wish to consider filing a Petition under 37 CFR 1.137(b) to revive the application if this evidence cannot be submitted.

Any renewed petition in order to be considered timely must be filed within TWO MONTHS of the date of mailing of this decision.

Should there be any questions with respect to this decision, please contact Sandra Morris; by mail addressed to: Director, Technology Center 1700/2900, P.O. Box 1450, Alexandria, VA 22313-1450; or by telephone at (571) 272-2622.

Jacqueline M. Stone

Jacqueline Stone
Director, Technology Center 1700/2900

UNITED STATES PATENT AND TRADEMARK OFFICE

Commissioner for Patents
United States Patent and Trademark Office
P.O. Box 1450
Alexandria, VA 22313-1450
www.uspto.gov

9/22/05

DANIEL N. DAISAK, ESQ.
TYCO PLASTICS & ADHESIVES
7 ROSZEL ROAD
PRINCETON, NJ 08540

In re Application of
Susan Ann Glander
Serial No.: 29/178,155
Filed: July 29, 2003
Attorney Docket No.: 26208

: PETITION DECISION

This is a decision on applicant's renewed petition to revive patent application under 37 CFR 1.137(b), filed August 4, 2005, to revive an unintentionally abandoned application.

A review of the file history shows that the Office mailed a Notice of Allowance to applicant on August 26, 2004, giving applicant a three-month shortened statutory period in which to submit the Issue fee and formal drawings. As no response was submitted by November 26, 2004, a Notice of Abandonment was mailed January 20, 2005 A petition under 37 CFR 1.181 was submitted February 24, 2005, which was dismissed due to deficiencies.

A grantable petition for a design application under 37 CFR 1.137(b), as revised December 1, 1997, requires four items: (1) a petition and petition fee; (2) a complete response if not earlier made; (3) a statement that the entire period of delay in prosecution was unintentional; and (4) a terminal disclaimer and disclaimer fee. Applicant has not submitted the required terminal disclaimer and fee, which is required for all design patent application petitions (37 CFR 1.137(d)).

The petition is **DISMISSED**.

Any renewed petition in order to be considered timely must be filed within TWO MONTHS of the date of mailing of this decision.

Should there be any questions with respect to this decision, please contact Sandra Morris; by mail addressed to: Director, Technology Center 1700/2900, P.O. Box 1450, Alexandria, VA 22313-1450; or by telephone at (571) 272-2622.

Jacqueline M. Stone

Jacqueline Stone
Director, Technology Center 1700/2900

UNITED STATES PATENT AND TRADEMARK OFFICE

Commissioner for Patents
United States Patent and Trademark Office
P.O. Box 1450
Alexandria, VA 22313-1450
www.uspto.gov

TYCO PLASTICS AND ADHESIVES
7 ROSZEL ROAD
PRINCETON, JN 08550

COPY MAILED

OCT 2 7 2005

OFFICE OF PETITIONS

In re Application of
Susan Ann Glander et al
Application No. 29/178,155
Filed: July 29, 2003
Attorney Docket No. 26208

ON PETITION

This is a decision on the petition under 37 CFR 1.137(b), filed September 28, 2005, to revive the above-identified application.

The petition is **DISMISSED.**

Any request for reconsideration of this decision must be submitted within TWO (2) MONTHS from the mail date of this decision. Extensions of time under 37 CFR 1.136(a) are permitted. The reconsideration request should include a cover letter entitled "**Renewed Petition under 37 CFR 1.137(b)**." This is **not** final agency action within the meaning of 5 U.S.C. § 704.

The above-identified application became abandoned for failure submit the issue fee and formal drawings in a timely manner in reply to the Notice of Allowance mailed August 26, 2004 , which set a statutory period for reply of three (3) months. Accordingly, the above-identified application became abandoned on November 27, 2004.

A grantable petition under 37 CFR 1.137(b) must be accompanied by: (1) the required reply, unless previously filed; (2) the petition fee as set forth in 37 CFR 1.17(m); (3) a statement that the entire delay in filing the required reply from the due date for the reply until the filing of a grantable petition pursuant to 37 CFR 1.137(b) was unintentional; and (4) any terminal disclaimer (and fee as set forth in 37 CFR 1.20(d)) required by 37 CFR 1.137(c). Where there is a question as to whether either the abandonment or the delay in filing a petition under 37 CFR 1.137 was unintentional, the Commissioner may require additional information. See MPEP 711.03(c)(III)(C) and (D). The instant petition lack(s) item(s) (1).

The issue fee has been received. However, there is no indication that the formal drawings that is required from the August 26, 2004 Notice of Allowance has not been submitted. This application can not be revived until the formal drawings has been received.

Further correspondence with respect to this matter should be addressed as follows:

By mail: Mail Stop PETITIONS
Commissioner for Patents
Post Office Box 1450
Alexandria, VA 22313-1450

By hand: Customer Service Window
Randolph Building
401 Dulany Street
Alexandria, VA 22314

By facsimile: (571) 273-8300
ATTN: Office of Petitions

Telephone inquiries concerning this decision should be directed to the undersigned at (571) 272-3210.

Irvin Dingle
Petitions Examiner
Office of Petitions

UNITED STATES PATENT AND TRADEMARK OFFICE

Commissioner for Patents
United States Patent and Trademark Office
P.O. Box 1450
Alexandria, VA 22313-1450
www.uspto.gov

TYCO PLACSTICS & ADHESIVES
7 ROSZEL ROAD
PRINCETON, NJ 08550

COPY MAILED

JAN 04 2007

OFFICE OF PETITIONS

In re Application of	:	
Susan Ann Glander et al	:	
Application No. 29/178,155	:	ON PETITION
Filed: July 29, 2003	:	
Attorney Docket No. 26208	:	

This is a decision on the renewed petition under 37 CFR 1.137(b), filed December 27, 2005, to revive the above-identified application.

The petition is **GRANTED**.

Telephone inquiries concerning this decision should be directed to Irvin Dingle at (571) 272-3210.

This file is being forwarded to the Publishing Division to be reviewed by the drawing draftperson.

Irvin Dingle
Petitions Examiner
Office of Petitions

UNITED STATES PATENT AND TRADEMARK OFFICE

COMMISSIONER FOR PATENTS
UNITED STATES PATENT AND TRADEMARK OFFICE
P.O. BOX 1450
ALEXANDRIA, VA 22313-1450
www.uspto.gov

OSTROLENK FABER GERB & SOFFEN
1180 AVENUE OF THE AMERICAS
NEW YORK, NY 10036-8403

COPY MAILED

OCT 21 2003

OFFICE OF PETITIONS

In re Application of	:	
Dilip R. Mehta	:	
Application No. 29/178,170	:	DECISION GRANTING PETITION
Filed: March 20, 2003	:	UNDER 37 CFR 10(d)
Attorney Docket No. D/3966-127	:	

This is a decision on the petition, filed June 24, 2003, requesting that the above-identified application be accorded a filing date of March 20, 2003, rather than the presently accorded date of March 21, 2003. The petition is properly treated as a petition under 37 CFR 1.10(d).

Applicant requests the earlier filing date on the basis that the application was purportedly deposited with the U.S. Postal Service (USPS) as Express Mail on March 20, 2003, pursuant to 37 CFR 1.10. In support, applicant has submitted a copy of Express Mail label No. EV 162750846US, the same Express Mail number which appears on the transmittal letter for the instant application, bearing a "date-in" of March 21, 2003. Additionally, the petition is accompanied by a copy of applicant's log of Express Mail entitiled "Pickup Service Statement for Express Mail, Priority Mail, or Parcel Post," which discloses that an Express Mail package bearing label number EV 162750846US was signed for by a USPS employee on March 20, 2003. The petition is further accompanied by a statement from the USPS which states that the package bearing Express Mail label No. EV 162750846US was delivered on March 21, 2003 at 11:20 AM in Arlington, VA 22202 and signed for by B. Anderson. In view thereof, applicant requests that this application be accorded a filing date of March 20, 2003.

Paragraph (a) of 37 CFR 1.10 states that:

> Any correspondence received by the Patent and Trademark Office (Office) that was delivered by the "Express Mail Post Office to Addressee" service of the United States Postal Service (USPS) will be considered filed in the Office on the date of

> deposit with the USPS. The date of deposit with the USPS is shown by the "date-in" on the "Express Mail" mailing label or other official USPS notation. If the USPS deposit date cannot be determined, the correspondence will be accorded the Office receipt date as the filing date. See §1.6(a) (emphasis supplied).

Paragraph (d) of 37 CFR 1.10 states that:

> Any person filing correspondence under this section that was received by the Office and delivered by the "Express Mail Post Office to Addressee" service of the USPS, who can show that the "date-in" on the "Express Mail" mailing label or other official notation entered by the USPS was incorrectly entered or omitted by the USPS, may petition the Commissioner to accord the correspondence a filing date as of the date the correspondence is shown to have been deposited with the USPS, provided that:
>
> (1) The petition is filed promptly after the person becomes aware that the Office has accorded, or will accord, a filing date based upon an incorrect entry by the USPS;
>
> (2) The number of the "Express Mail" mailing label was placed on the paper(s) or fee(s) that constitute the correspondence prior to the original mailing by "Express Mail"; and
>
> (3) The petition includes a showing which establishes, to the satisfaction of the Commissioner, that the requested filing date was the date the correspondence was deposited in "Express Mail Post Office to Addressee" service prior to the last scheduled pickup for that day. Any showing pursuant to this paragraph must be corroborated by evidence from the USPS or that came into being after deposit and within one business day of the deposit of the correspondence in the "Express Mail Post Office to Addressee" service of the USPS (emphasis supplied).

The evidence submitted satisfies the showing required by 37 CFR 1.10(d) in establishing that this application was deposited by Express Mail on March 20, 2003. Accordingly, the instant application is entitled to a filing date of March 20, 2003, and has been so accorded.

The petition is **granted**.

Any inquiries specific to this decision should be directed to Frances Hicks at (703) 305-8680.

Brian Hearn
Senior Petitions Examiner
Office of Petitions
Office of the Deputy Commissioner
for Patent Examination Policy

UNITED STATES PATENT AND TRADEMARK OFFICE

Commissioner for Patents
United States Patent and Trademark Office
P.O. Box 1450
Alexandria, VA 22313-1450
www.uspto.gov

BRENDAN J. KENNEDY
OSTROLENK FABER GERB & SOFFEN, LLP
1180 AVENUE OF THE AMERICAS
NEW YORK, NY 10036-8403

COPY MAILED

MAY 2 8 2004

OFFICE OF PETITIONS

NOTICE

In re Application of
Dilip R. Mehta
Application No. 29/178,170
Filed: March 20, 2003
Attorney Docket No. D/3966-127

This is a notice regarding your request for acceptance of a fee deficiency submission under 37 CFR 1.28. On September 1, 1998, the Court of Appeals for the Federal Circuit held that 37 CFR 1.28(c) is the sole provision governing the time for correction of the erroneous payment of the issue fee as a small entity. **See DH Technology v. Synergystex International, Inc. 154 F.3d 1333, 47 USPQ2d 1865 (Fed. Cir. Sept. 1, 1998).**

The Office no longer investigates or rejects original or reissue applications under 37 CFR 1.56. **1098 Off. Gaz. Pat. Office 502 (January 3, 1989).** Therefore, nothing in this Notice is intended to imply that an investigation was done.

Your fee deficiency submission under 37 CFR 1.28 is hereby **ACCEPTED**.

Inquiries related to this communication should be directed to the Office of Petitions Staff at (703) 305-9285.

This file is being forwarded to the Publishing Division.

Irvin Dingle
Petitions Examiner
Office of Petitions
Office of the Deputy Commissioner
for Patent Examination Policy

UNITED STATES PATENT AND TRADEMARK OFFICE

COMMISSIONER FOR PATENTS
UNITED STATES PATENT AND TRADEMARK OFFICE
P.O. BOX 1450
ALEXANDRIA, VA 22313-1450
www.uspto.gov

DEC 17 2003

Anthony G. Fussner
Harness, Dickey & Pierce, P.L.C.
Suite 400
7700 Bonhomme
St. Louis MO 63105

In re Application of	:	
Gary Kellmann	:	
Serial No.: 29/178,225	:	**REQUEST FOR EXPEDITED EXAMINATION**
Filed: March 19, 2003	:	
For: Lighted Hair Extension	:	

This is in response to the Request for expedited examination applicant filed October 10, 2003 to expedite the above-identified application under the provisions of 37 CFR 1.155.

Applicant has satisfied the provisions set forth in 37 CFR 1.155, thus the petition is **GRANTED**.

The application will be forwarded to the examiner for action on the merits commensurate with this decision.

Should there be any questions with regard to this letter please contact John Kittle by letter addressed to the Director, Technology Center 3700/2900, P.O. Box 1450, Alexandria, VA 22313-1450, or by telephone at (703)308-0873 or by facsimile transmission at (703)308-3139.

John E. Kittle

John E. Kittle
Director
Technology Center 3700/2900

UNITED STATES PATENT AND TRADEMARK OFFICE

Commissioner for Patents
United States Patent and Trademark Office
P.O. Box 1450
Alexandria, VA 22313-1450
www.uspto.gov

LORRI W. COOPER
JONES DAY
901 LAKESIDE AVENUE
CLEVELAND OH 44114

COPY MAILED

OCT 0 4 2004

OFFICE OF PETITIONS

ON PETITION

In re Application of	:	
Alaric Scott Durr et al	:	
Application No. 29/178,394	:	
Filed: March 25, 2003	:	
Attorney Docket No. 578340326164	:	

This is a decision on the petition, filed September 30, 2004, under 37 CFR 1.313(c)(1) to withdraw the above-identified application from issue after payment of the issue fee.

The petition is **GRANTED**.

The above-identified application is withdrawn from issue due to unpatentability of one or more claims. See 37 CFR 1.313(c)(1).

The application is hereby withdrawn from issue.

Telephone inquiries should be directed to the undersigned at (571) 272-3208.

The application is being referred to Technology Center Art Unit 2913.

Karen Creasy

Karen Creasy
Petitions Examiner
Office of Petitions
Office of the Deputy Commissioner
for Patent Examination Policy

SPE RESPONSE FOR CERTIFICATE OF CORRECTION

DATE : ~~6/29/05~~ Examiner just received this 8/16/2005

Paper No.: _____

TO SPE OF : ART UNIT 2913

SUBJECT : Request for Certificate of Correction on Patent No.: 29/178394 D501146

A response is requested with respect to the accompanying request for a certificate of correction.

Please complete this form and return with file, within 7 days to:
Palm location **7580, Certificates of Correction Branch – South Tower – 9A22**
If response is for an IFW, **return to employee (named below) via PUBSCofC Team in MADRAS.**
With respect to the change(s) requested, correcting Office and/or Applicant's errors, should the patent read as shown in the certificate of correction (COCIN)? No new matter should be introduced, nor should the scope or meaning of the claims be changed.

Virginia Tolbert

Thank You For Your Assistance

Certificates of Correction Branch
Tel. No. 703-308-9390 ext113

The request for issuing the above-identified correction(s) is hereby:
Note your decision on the appropriate box.

- [x] **Approved** — All changes apply.
- [ ] **Approved in Part** — Specify below which changes **do not** apply.
- [ ] **Denied** — State the reasons for denial below.

Comments:

Caron D. Veynar

Supervisory CARON D. VEYNAR
PRIMARY EXAMINER
GROUP 2900
SPE

2913
Art Unit

UNITED STATES PATENT AND TRADEMARK OFFICE

Commissioner for Patents
United States Patent and Trademark Office
P.O. Box 1450
Alexandria, VA 22313-1450
www.uspto.gov

MAILED

APR 01 2010

OFFICE OF PETITIONS

C/O FROST BROWN TODD LLC
2200 PNC CENTER
201 E. FIFTH STREET
CINCINNATI, OH 45202-4182

In re Patent No. D508,461	:	
Issued: August 16, 2005	:	
Application No. 29/178,402	:	NOTICE
Filed: March 25, 2003	:	
Attorney Docket No.: None	:	

This is a notice regarding your request for acceptance of a fee deficiency submission under 37 CFR 1.28. On September 1, 1998, the Court of Appeals for the Federal Circuit held that 37 CFR 1.28(c) is the sole provision governing the time for correction of the erroneous payment of the issue fee as a small entity. **See DH Technology v. Synergystex International, Inc. 154 F.3d 1333, 47 USPQ2d 1865 (Fed. Cir. Sept. 1, 1998).**

The Office no longer investigates or rejects original or reissue applications under 37 CFR 1.56. **1098 Off. Gaz. Pat. Office 502 (January 3, 1989)**. Therefore, nothing in this Notice is intended to imply that an investigation was done.

Your fee deficiency submission under 37 CFR 1.28 is hereby **ACCEPTED**.

This patent no longer qualifies for small entity status.

Sherry D. Brinkley
Petitions Examiner
Office of Petitions

UNITED STATES PATENT AND TRADEMARK OFFICE

MAR 1 1 2004

Commissioner for Patents
United States Patent and Trademark Office
P.O. Box 1450
Alexandria, VA 22313-1450
www.uspto.gov

LEWIS, RICE, AND FINGERSH, L.C.
BOX IP DEPARTMENT
SUITE 2000
500 N BROADWAY
ST LOUIS, MO 63102

In re Application of Andrew Burges et al. Serial No.: 29/178,489 Filed: March 25, 2003 Attorney Docket No.: 26/1224D	: PETITION DECISION

This is a decision on applicants' petition to revive patent application under 37 CFR 1.137(b), filed on January 7, 2004, to revive an unintentionally abandoned application.

This application became abandoned for failure to respond to the Notice to File Missing Parts of Nonprovisional Application mailed May 8, 2003, which set a two-month period to submit the filing fee and oath. As the response was not received by July 8, 2003, the application was abandoned. Applicant then filed this petition.

A grantable petition under 37 CFR 1.137(b), as revised December 1, 1997, requires four items: (1) a petition and petition fee; (2) a complete response if not earlier made; (3) a statement that the entire period of delay in prosecution was unintentional; and (4) a terminal disclaimer and disclaimer fee.

Applicants' petition is **GRANTED**.

The application will be forwarded to an Examiner for initial examination in due course.

As the application was abandoned, the Extension of time cannot be granted; therefore, the $1005.00 extension fee will be refunded to applicant by Treasury Check in due course.

Should there be any questions with respect to this decision, please contact Sandra Morris; by mail addressed to: Director, Technology Center 3700/2900, P.O. Box 1450, Alexandria, VA 22313-1450; or by telephone at (571) 272-2622.

John Kittle
Director, Technology Center 3700/2900

UNITED STATES PATENT AND TRADEMARK OFFICE

Commissioner for Patents
United States Patent and Trademark Office
P.O. Box 1450
Alexandria, VA 22313-1450
www.uspto.gov

LEWIS RICE & FINGERSH
ATTN: BOX IP DEPT.
500 NORTH BROADWAY
SUITE 2000
ST LOUIS, MO 63102

COPY MAILED

JUN 0 8 2004

OFFICE OF PETITIONS

In re Application of	:	
Andrew Burges et al	:	
Application No. 29/178,489	:	NOTICE
Filed: March 25, 2003	:	
Attorney Docket No. 26/1224D	:	

This is a notice regarding your request for acceptance of a fee deficiency submission under 37 CFR 1.28. On September 1, 1998, the Court of Appeals for the Federal Circuit held that 37 CFR 1.28(c) is the sole provision governing the time for correction of the erroneous payment of the issue fee as a small entity. **See DH Technology v. Synergystex International, Inc. 154 F.3d 1333, 47 USPQ2d 1865 (Fed. Cir. Sept. 1, 1998).**

The Office no longer investigates or rejects original or reissue applications under 37 CFR 1.56. **1098 Off. Gaz. Pat. Office 502 (January 3, 1989).** Therefore, nothing in this Notice is intended to imply that an investigation was done.

Your fee deficiency submission under 37 CFR 1.28 is hereby **ACCEPTED.**

Inquiries related to this communication should be directed to the Office of Petitions Staff at (703) 305-9285.

This file is being forwarded to Technology Center AU 2900.

Wan Laymon
Petitions Examiner
Office of Petitions
Office of the Deputy Commissioner
for Patent Examination Policy

SPE RESPONSE FOR CERTIFICATE OF CORRECTION

Paper No.: _____

DATE : 12/11/2006

TO SPE OF : ART UNIT 2900 (2912)

SUBJECT : Request for Certificate of Correction on Patent No.: D507,792

A response is requested with respect to the accompanying request for a certificate of correction.

Please complete this form and return with file, within 7 days to:
Certificates of Correction Branch – 2900 South Tower ste.9A43A
Palm location **7580** - Tel. No. 305-8309

With respect to the change(s) requested, correcting Office and/or Applicant's errors, should the patent read as shown in the certificate of correction? No new matter should be introduced, nor should the scope or meaning of the claims be changed.

***ok to enter replacement drawings as req. in COCIN in Madras?**

Ernest C. White, LIE (703) 308-9390x122
Certificates of Correction Branch

Thank You For Your Assistance

The request for issuing the above-identified correction(s) is hereby:
Note your decision on the appropriate box.

- ☑ **Approved** — All changes apply.
- ☐ **Approved in Part** — Specify below which changes **do not** apply.
- ☐ **Denied** — State the reasons for denial below.

Comments:

STELLA M. REID
SUPERVISORY PATENT EXAMINER
SPE

2912
Art Unit

SPE RESPONSE FOR CERTIFICATE OF CORRECTION

Paper No.: _____

DATE : 12/11/2006

TO SPE OF : ART UNIT 2900 (2912)

SUBJECT : Request for Certificate of Correction on Patent No.: D507,264

A response is requested with respect to the accompanying request for a certificate of correction.

Please complete this form and return with file, within 7 days to:
Certificates of Correction Branch – 2900 South Tower ste.9A43A
Palm location **7580** - Tel. No. 305-8309

With respect to the change(s) requested, correcting Office and/or Applicant's errors, should the patent read as shown in the certificate of correction? No new matter should be introduced, nor should the scope or meaning of the claims be changed.

***ok to enter replacement drawings as req. in COCIN in Madras?**

Thank You For Your Assistance

Ernest C. White, LIE (703) 308-9390x122
Certificates of Correction Branch

The request for issuing the above-identified correction(s) is hereby:
Note your decision on the appropriate box.

- ☑ **Approved** — All changes apply.
- ☐ **Approved in Part** — Specify below which changes **do not** apply.
- ☐ **Denied** — State the reasons for denial below.

Comments:

NB

STELLA M. REID
SUPERVISORY PATENT EXAMINER
SPE

2912
Art Unit

UNITED STATES PATENT AND TRADEMARK OFFICE

Commissioner for Patents
United States Patent and Trademark Office
P.O. Box 1450
Alexandria, VA 22313-1450
www.uspto.gov

Paper No. 4

Theresa A. Orr
Dobrusin & Thennisch PC
Suite 311
401 South Old Woodward Avenue
Birmingham MI 48009

COPY MAILED

AUG 2 7 2003

OFFICE OF PETITIONS

In re Application of	:	
Garrett A. Morelock	:	
Application No. 29/178,567	:	DECISION GRANTING
Filed: March 26, 2003	:	PETITION
Attorney Docket No. 1086.001C2	:	
Title: PAINT BUCKET AND	:	
ERGONOMIC HOLDER	:	

This is a decision on the "Response to 'Notice of Omitted Items' in Nonprovisional Application Proceed with Examination of Application as Filed," filed June 16, 2003, which is properly treated as a petition under 37 CFR §1.1.53(b), requesting the application, including figures three and four (3 and 4) be accorded a filing date of March 26, 2003 as part of the original disclosure.

The application was deposited on March 26, 2003. However, on June 6, 2003, Initial Patent Examination Division mailed a Notice to File Missing Parts of Nonprovisional Application - Filing Date Granted (notice) stating that figures three and four (3 and 4) appeared to have been omitted on filing.

In response, on June 16, 2003, applicants filed the present petition. The petition is further accompanied by a copy of figures three and four (3 and 4), along with a copy of applicants' postcard receipt acknowledging receipt of twenty-four (24) figures in the United States Patent and Trademark Office

(Office) on March 26, 2003. Applicants request that the application, including figures three and four (3 and 4) be accorded a filing date of March 26, 2003.

Upon review of the record, the above-mentioned figures have not been located among the application papers. However, the evidence is convincing that the application papers deposited on March 26, 2003 included figures three and four (3 and 4), and the sheet which contained these two figures was subsequently misplaced in the Office.

Therefore, the application, including figures three and four (3 and 4) was complete on filing and entitled to a filing date of March 26, 2003 as part of the original disclosure.

Accordingly, the petition is **GRANTED**.

The notice mailed March 26, 2003 was sent in error. Therefore, no petition fee is necessary. The petition fee of $130 will be refunded to petitioner's Deposit Account.

The application file is being returned to the Office of Initial Patent Examination for further processing with a filing date of March 26, 2003, using the original application papers filed on that date, as well as figures three and four (3 and 4) of the specification submitted on June 16, 2003.

Any inquiries related to this decision should be directed to Petitions Attorney Paul Shanoski at (703) 305-0011.

Beverly Flanagan
Supervisory Petitions Examiner
Office of Petitions
United States Patent and Trademark Office

UNITED STATES PATENT AND TRADEMARK OFFICE

NOV 18 2004

Commissioner for Patents
United States Patent and Trademark Office
P.O. Box 1450
Alexandria, VA 22313-1450
www.uspto.gov

CHARLES E. BAXLEY
HART, BAXLEY, DANIELS & HOLTON
90 JOHN STREET
THIRD FLOOR
NEW YORK, NY 10038

In re Application of	:
Ming-Chen Lin	:
Serial No.: 29/178,585	: PETITION DECISION
Filed: March 27, 2003	:
Attorney Docket No.: 14816 B	:

This is a decision on the Petition to Revive under 37 CFR 1.137(b), filed August 23, 2004, to revive an unintentionally abandoned application.

The petition is **DISMISSED**.

This application became abandoned for failure to fully respond to the Notice of Allowance mailed September 8, 2003, which set a three month shortened statutory period of time to submit the Issue fee. As no reply was received by December 8, 2003, a Notice of Abandonment was mailed January 27, 2004; this petition followed.

A grantable petition under 37 CFR 1.137(b), as revised December 1, 1997, requires four items: (1) a petition and petition fee; (2) a complete response if not earlier made; (3) a statement that the entire period of delay in prosecution was unintentional; and (4) a terminal disclaimer and disclaimer fee. This petition lacks item (4), as a terminal disclaimer and fee must be included with design application petitions. 37 CFR 1.137(c).

Any renewed petition in order to be considered timely must be filed within TWO MONTHS of the date of mailing of this decision.

Should there be any questions with respect to this decision, please contact Sandra Morris; by mail addressed to: Director, Technology Center 3700/2900, P.O. Box 1450, Alexandria, VA 22313-1450; or by telephone at (571) 272-2622.

John Kittle
Director, Technology Center 3700/2900

UNITED STATES PATENT AND TRADEMARK OFFICE

Commissioner for Patents
United States Patent and Trademark Office
P.O. Box 1450
Alexandria, VA 22313-1450
www.uspto.gov

CHARLES E. BAXLEY, ESQ.
90 JOHN STREET
SUITE 309
NEW YORK, NY 10038

COPY MAILED

AUG 16 2006

OFFICE OF PETITIONS

In re Application of	:	
Ming-Cheng Lin	:	
Application No. 29/178,585	:	DECISION GRANTING PETITION
Filed: March 27, 2003	:	UNDER 37 CFR 1.137(b)
Attorney Docket No. STISD001	:	

This is a decision on the renewed petition under 37 CFR 1.137(b), filed December 6, 2004, to revive the above-identified application.

The petition is **GRANTED**.

This application became abandoned for failure to timely pay the issue fee on or before December 8, 2003, as required by the Notice of Allowance mailed September 8, 2003. A Notice of Abandonment was mailed on January 27, 2004.

The petition satisfies the conditions for revival pursuant to the provisions of 37 CFR 1.137(b) in that (1) the reply in the form of payment of the $240 issue fee in effect at the time of filing of the petition on August 25, 2004; (2) the $665 petition fee; (3) the required statement of unintentional delay; and (4) a terminal disclaimer as required by 37 CFR 1.137(d) have been received. Accordingly, the failure to timely pay the issue fee is accepted as having been unintentionally delayed.

The terminal disclaimer filed December 6, 2004 has been accepted and made of record.

Telephone inquiries concerning this decision should be directed to the undersigned at (571) 272-3218.

This matter is being referred to Publishing Division for processing into a patent.

Frances Hicks
Petitions Examiner
Office of Petitions

UNITED STATES PATENT AND TRADEMARK OFFICE

COMMISSIONER FOR PATENTS
UNITED STATES PATENT AND TRADEMARK OFFICE
P.O. BOX 1450
ALEXANDRIA, VA 22313-1450
www.uspto.gov

Paper No. 6

COPY MAILED

NOV 20 2003

OFFICE OF PETITIONS

FITZPATRICK CELLA HARPER & SCINTO
30 ROCKEFELLER PLAZA
NEW YORK, NY 10112

In re Application of	:	
Wadalawala et al.	:	DECISION ACCORDING
Application No. 29/178,636	:	STATUS UNDER
Filed: March 31, 2003	:	37 CFR 1.47
Attorney Docket No. 00946.006009	:	
For: BOTTLE	:	

This is in response to the petition under 37 CFR 1.47(a) filed October 30, 2003.

The petition is granted.

Petitioner has shown that the non-signing inventor has refused to join in the filing of the above-identified application after having been presented with the application papers or cannot be located.

The above-identified application and papers have been reviewed and found in compliance with 37 CFR 1.47(a). This application is hereby accorded Rule 1.47(a) status.

As provided in Rule 1.47(c), this Office will forward notice of this application's filing to the non-signing inventor at the address given in the petition. Notice of the filing of this application will also be published in the Official Gazette.

After this decision is mailed, the above-identified application will be returned to the Office of Initial Patent Examination for further processing.

Telephone inquiries should be directed to Petitions Attorney Steven Brantley at (703) 306-5683.

Charles Steven Brantley
Petitions Attorney
Office of Petitions

UNITED STATES PATENT AND TRADEMARK OFFICE

COMMISSIONER FOR PATENTS
UNITED STATES PATENT AND TRADEMARK OFFICE
P.O. BOX 1450
ALEXANDRIA, VA 22313-1450
www.uspto.gov

Paper No. 7

Jerry Louis Esposito
6396 Setting Sun Drive
Huntington Beach, CA 92648

COPY MAILED

NOV 20 2003

OFFICE OF PETITIONS

Letter

In re Application of :
Wadalawala et al. :
Application No. 29/178,636 :
Filed: March 31, 2003 :
Attorney Docket No. 00946.006009 :
For: BOTTLE :

Dear Mr. Esposito:

You are named as a joint inventor in the above identified United States patent application, filed under the provisions of 35 U.S.C. 116 (United States Code), and 37 CFR 1.47(a), Rules of Practice in Patent Cases. Should a patent be granted on the application you will be designated therein as a joint inventor.

As a named inventor you are entitled to inspect any paper in the file wrapper of the application, order copies of all or any part thereof (at a prepaid cost per 37 CFR 1.19) or make your position of record in the application. Alternatively, you may arrange to do any of the preceding through a registered patent attorney or agent presenting written authorization from you. If you care to join the application, counsel of record (see below) would presumably assist you. Joining in the application would entail the filing of an appropriate oath or declaration by you pursuant to 37 CFR 1.63.

Requests for information regarding your application should be directed to the File Information Unit at (703)308-2733. Information regarding how to pay for and order a copy of the application, or a specific paper in the application, should be directed to Certification Division at (703)308-9726 or 1(800)972-6382 (outside the Washington D.C. area).

Telephone inquiries regarding this communication should be directed to Petitions Attorney Steven Brantley at (703) 306-5683.

Charles Steven Brantley
Petitions Attorney
Office of Petitions

cc: FITZPATRICK CELLA HARPER & SCINTO
30 ROCKEFELLER PLAZA
NEW YORK, NY 10112

UNITED STATES PATENT AND TRADEMARK OFFICE

COMMISSIONER FOR PATENTS
UNITED STATES PATENT AND TRADEMARK OFFICE
P.O. BOX 1450
ALEXANDRIA, VA 22313-1450
www.uspto.gov

Paper No. 6

FITZPATRICK CELLA HARPER & SCINTO
30 ROCKEFELLER PLAZA
NEW YORK, NY 10112

COPY MAILED

NOV 1 8 2003

OFFICE OF PETITIONS

In re Application of	:	
Wadalawala et al.	:	DECISION ACCORDING
Application No. 29/178,643	:	STATUS UNDER
Filed: March 31, 2003	:	37 CFR 1.47
Attorney Docket No. 00946.006014	:	
For: BOTTLE WITH CAP	:	

This is in response to the petition under 37 CFR 1.47(a) filed October 30, 2003.

The petition is granted.

Petitioner has shown that the non-signing inventor has refused to join in the filing of the above-identified application after having been presented with the application papers or cannot be located.

The above-identified application and papers have been reviewed and found in compliance with 37 CFR 1.47(a). This application is hereby accorded Rule 1.47(a) status.

As provided in Rule 1.47(c), this Office will forward notice of this application's filing to the non-signing inventor at the address given in the petition. Notice of the filing of this application will also be published in the Official Gazette.

After this decision is mailed, the above-identified application will be returned[to the Office of Initial Patent Examination for further processing.

Telephone inquiries should be directed to Petitions Attorney Steven Brantley at (703) 306-5683.

Charles Steven Brantley
Petitions Attorney
Office of Petitions

UNITED STATES PATENT AND TRADEMARK OFFICE

COMMISSIONER FOR PATENTS
UNITED STATES PATENT AND TRADEMARK OFFICE
P.O. BOX 1450
ALEXANDRIA, VA 22313-1450
www.uspto.gov

Paper No. 7

COPY MAILED

NOV 18 2003

OFFICE OF PETITIONS

Jerry Louis Esposito
6396 Setting Sun Drive
Huntingto Beach, CA 92648

In re Application of	:	
Wadalawala et al.	:	DECISION ACCORDING
Application No. 29/178,643	:	STATUS UNDER
Filed: March 31, 2003	:	37 CFR 1.47
Attorney Docket No. 00946.006014	:	
For: BOTTLE WITH CAP	:	

Dear Mr. Esposito:

You are named as a joint inventor in the above identified United States patent application, filed under the provisions of 35 U.S.C. 116 (United States Code), and 37 CFR 1.47(a), Rules of Practice in Patent Cases. Should a patent be granted on the application you will be designated therein as a joint inventor.

As a named inventor you are entitled to inspect any paper in the file wrapper of the application, order copies of all or any part thereof (at a prepaid cost per 37 CFR 1.19) or make your position of record in the application. Alternatively, you may arrange to do any of the preceding through a registered patent attorney or agent presenting written authorization from you. If you care to join the application, counsel of record (see below) would presumably assist you. Joining in the application would entail the filing of an appropriate oath or declaration by you pursuant to 37 CFR 1.63.

Requests for information regarding your application should be directed to the File Information Unit at (703)308-2733. Information regarding how to pay for and order a copy of the application, or a specific paper in the application, should be directed to Certification Division at (703)308-9726 or 1(800)972-6382 (outside the Washington D.C. area).

Telephone inquiries regarding this communication should be directed to Petitions Attorney Steven Brantley at (703) 306-5683.

Charles Steven Brantley
Petitions Attorney
Office of Petitions
Office of the Deputy Commissioner
for Patent Examination Policy

cc: FITZPATRICK CELLA HARPER & SCINTO
30 ROCKEFELLER PLAZA
NEW YORK, NY 10112

UNITED STATES PATENT AND TRADEMARK OFFICE

COMMISSIONER FOR PATENTS
UNITED STATES PATENT AND TRADEMARK OFFICE
P.O. BOX 1450
ALEXANDRIA, VA 22313-1450
www.uspto.gov

Paper No. 6

FITZPATRICK CELLA HARPER & SCINTO
30 ROCKEFELLER PLAZA
NEW YORK, NY 10112

COPY MAILED

NOV 21 2003

OFFICE OF PETITIONS

In re Application of	:	
Wadalawala et al.	:	DECISION ACCORDING
Application No. 29/178,644	:	STATUS UNDER
Filed: March 31, 2003	:	37 CFR 1.47
Attorney Docket No. 00946.006013	:	
For: BOTTLE WITH CAP	:	

This is in response to the petition under 37 CFR 1.47(a) filed October 30, 2003.

The petition is granted.

Petitioner has shown that the non-signing inventor has refused to join in the filing of the above-identified application after having been presented with the application papers or cannot be located.

The above-identified application and papers have been reviewed and found in compliance with 37 CFR 1.47(a). This application is hereby accorded Rule 1.47(a) status.

As provided in Rule 1.47(c), this Office will forward notice of this application's filing to the non-signing inventor at the address given in the petition. Notice of the filing of this application will also be published in the Official Gazette.

After this decision is mailed, the above-identified application will be returned to the Office of Initial Patent Examination for further processing.

Telephone inquiries should be directed to Petitions Attorney Steven Brantley at (703) 306-5683.

Charles Steven Brantley
Petitions Attorney
Office of Petitions

UNITED STATES PATENT AND TRADEMARK OFFICE

COMMISSIONER FOR PATENTS
UNITED STATES PATENT AND TRADEMARK OFFICE
P.O. BOX 1450
ALEXANDRIA, VA 22313-1450
www.uspto.gov

Paper No. 7

Jerry Louis Esposito
6396 Setting Sun Drive
Huntington Beach, CA 92648

COPY MAILED

NOV 21 2003

OFFICE OF PETITIONS

Letter

In re Application of :
Wadalawala et al. :
Application No. 29/178,644 :
Filed: March 31, 2003 :
Attorney Docket No. 00946.006013 :
For: BOTTLE WITH CAP :

Dear Mr. Esposito:

You are named as a joint inventor in the above identified United States patent application, filed under the provisions of 35 U.S.C. 116 (United States Code), and 37 CFR 1.47(a), Rules of Practice in Patent Cases. Should a patent be granted on the application you will be designated therein as a joint inventor.

As a named inventor you are entitled to inspect any paper in the file wrapper of the application, order copies of all or any part thereof (at a prepaid cost per 37 CFR 1.19) or make your position of record in the application. Alternatively, you may arrange to do any of the preceding through a registered patent attorney or agent presenting written authorization from you. If you care to join the application, counsel of record (see below) would presumably assist you. Joining in the application would entail the filing of an appropriate oath or declaration by you pursuant to 37 CFR 1.63.

Requests for information regarding your application should be directed to the File Information Unit at (703)308-2733. Information regarding how to pay for and order a copy of the application, or a specific paper in the application, should be directed to Certification Division at (703)308-9726 or 1(800)972-6382 (outside the Washington D.C. area).

Telephone inquiries regarding this communication should be directed to Petitions Attorney Steven Brantley at (703) 306-5683.

Charles Steven Brantley
Petitions Attorney
Office of Petitions

cc: FITZPATRICK CELLA HARPER & SCINTO
30 ROCKEFELLER PLAZA
NEW YORK, NY 10112

UNITED STATES PATENT AND TRADEMARK OFFICE

Commissioner for Patents
United States Patent and Trademark Office
P.O. Box 1450
Alexandria, VA 22313-1450
www.uspto.gov

GREGORY LYNN MATTILA
2052 SPRUCE AVENUE
WOODLAND, WA 98674

8/15/05

In re Application of
Gregory Lynn Mattila
Serial No.: 29/178,649
Filed: March 27, 2003
Attorney Docket No.: MATT-001

: PETITION DECISION

This is a decision on the Petition to Revive under 37 CFR 1.137(b), received January 11 and May 16, 2005, to revive an unintentionally abandoned application.

The petition is **DISMISSED**.

This application became abandoned for failure to respond to the Notice of Allowance and Issue Fee due, mailed September 9, 2003, which required payment of the Issue fee. As no response was received by December 9, 2003, a Notice of Abandonment was mailed January 27, 2004. This petition followed.

A grantable petition under 37 CFR 1.137(b), as revised December 1, 1997, requires four items: (1) a petition and petition fee; (2) a complete response if not earlier made; (3) a statement that the entire period of delay in prosecution was unintentional; and (4) a terminal disclaimer and disclaimer fee. Applicant's petition lacks item (2). A terminal disclaimer and fee of $65.00 is required for all design petitions, a copy of which has been enclosed.

Any renewed petition in order to be considered timely must be filed within TWO MONTHS of the date of mailing of this decision.

Should there be any questions with respect to this decision, please contact Sandra Morris; by mail addressed to: Director, Technology Center 1700/2900, P.O. Box 1450, Alexandria, VA 22313-1450; or by telephone at (571) 272-2622.

Jacqueline M. Stone

Jacqueline Stone
Director, Technology Center 1700/2900

UNITED STATES PATENT AND TRADEMARK OFFICE

Commissioner for Patents
United States Patent and Trademark Office
P.O. Box 1450
Alexandria, VA 22313-1450
www.uspto.gov

10/14/05

GREGORY LYNN MATTILA
2052 SPRUCE AVENUE
WOODLAND, WA 98674

In re Application of
Gregory Lynn Mattila
Serial No.: 29/178,649
Filed: March 27, 2003
Attorney Docket No.: MATT-001

: PETITION DECISION

This is a decision on the renewed Petition to Revive under 37 CFR 1.137(b), received August 26, 2005, to revive an unintentionally abandoned application.

This application became abandoned for failure to respond to the Notice of Allowance and Issue Fee due, mailed September 9, 2003, which required payment of the Issue fee. As no response was received by December 9, 2003, a Notice of Abandonment was mailed January 27, 2004. A Petition was filed January 11 and May 16, 2005 was dismissed, as it lacked a terminal disclaimer.

A grantable petition under 37 CFR 1.137(b), as revised December 1, 1997, requires four items: (1) a petition and petition fee; (2) a complete response if not earlier made; (3) a statement that the entire period of delay in prosecution was unintentional; and (4) a terminal disclaimer and disclaimer fee.

Applicant's petition is **GRANTED**.

The application will be forwarded to Publication Division for printing as a patent in due course.

Should there be any questions with respect to this decision, please contact Sandra Morris; by mail addressed to: Director, Technology Center 1700/2900, P.O. Box 1450, Alexandria, VA 22313-1450; or by telephone at (571) 272-2622.

Jacqueline M. Stone

Jacqueline Stone
Director, Technology Center 1700/2900

UNITED STATES PATENT AND TRADEMARK OFFICE

COMMISSIONER FOR PATENTS
UNITED STATES PATENT AND TRADEMARK OFFICE
P.O. BOX 1450
ALEXANDRIA, VA 22313-1450
www.uspto.gov

DAVIS WRIGHT TREMAINE, LLP
2600 CENTURY SQUARE
1501 FOURTH AVENUE
SEATTLE, WA 98101-1688

COPY MAILED

JUL 07 2006

OFFICE OF PETITIONS

In re Application of	:	
Christopher Bourne	:	
Application No. 29/178,690	:	ON PETITION
Filed: March 28, 2003	:	
Attorney Docket No. 58290-16	:	

This is a decision on the petition under 37 CFR 1.137(b), filed on April 3, 2006, to revive the above-identified application.

The petition is **DISMISSED**.

The above-identified application became abandoned for failure to timely respond to the Notice of Allowance and Fee(s) Due mailed December 29, 2005.

A grantable petition under 37 CFR 1.137(b) must be accompanied by: (1) the required reply, unless previously filed; (2) the petition fee as set forth in 37 CFR 1.17(m); (3) a statement that the entire delay in filing the required reply from the due date for the reply until the filing of a grantable petition pursuant to 37 CFR 1.137(b) was unintentional; and (4) any terminal disclaimer (and fee as set forth in 37 CFR 1.20(d)) required by 37 CFR 1.137(d). Where there is a question as to whether either the abandonment or the delay in filing a petition under 37 CFR 1.137 was unintentional, the Commissioner may require additional information. See MPEP 711.03(c)(III)(C) and (D). The instant petition lacks item(s) (4).

A Terminal Disclaimer and the $65 Terminal Disclaimer fee is required under 37 CFR 1.137(d) if the application is: (1) a design application, (2) a utility application filed before June 8, 1995, or (3) a plant application filed before June 8, 1995. The Terminal Disclaimer must dedicate to the public a terminal part of the term of any patent granted the application equivalent to the period of abandonment of the application, and must also apply to any patent granted on any application containing a specific reference under 35 U.S.C. 120, 121 or 365(c) to the application for which revival is sought.

Any request for reconsideration of this decision must be submitted within **TWO (2) MONTHS** from the mail date of this decision. Extensions of time under 37 CFR 1.136(a) are permitted. The reconsideration request should include a cover letter entitled "Renewed Petition under 37 CFR 1.137(b), and be accompanied by the required Terminal Disclaimer and $65 fee." This is **not** a final agency action within the meaning of 5 U.S.C. § 704.

Further correspondence with respect to this matter should be addressed as follows:

By Mail: Mail Stop PETITION
Commissioner for Patents
P. O. Box 1450
Alexandria, VA 22313-1450

By hand: U. S. Patent and Trademark Office
Customer Service Window, Mail Stop Petitions
Randolph Building
401 Dulany Street
Alexandria, VA 22314

The centralized facsimile number is **(571) 273-8300.**

Telephone inquiries concerning this decision should be directed to the undersigned at (571) 272-3226.

Andrea Smith
Petitions Examiner
Office of Petitions

UNITED STATES PATENT AND TRADEMARK OFFICE

COMMISSIONER FOR PATENTS
UNITED STATES PATENT AND TRADEMARK OFFICE
P.O. BOX 1450
ALEXANDRIA, VA 22313-1450
www.uspto.gov

DAVIS WRIGHT TREMAINE, LLP
2600 CENTURY SQUARE
1501 FOURTH AVENUE
SEATTLE, WA 98101-1688

COPY MAILED
SEP 28 2006
OFFICE OF PETITIONS

In re Application of	:	
Christopher Bourne	:	
Application No. 29/178,690	:	ON PETITION
Filed: March 28, 2003	:	
Attorney Docket No. 58290-16	:	

This is a decision on the renewed petition under 37 CFR 1.137(b), filed on August 8, 2006, to revive the above-identified application.

Since the petition now satisfies the requirements of 37 CFR 1.137(b), in that petitioner has supplied the required reply in the form of a Terminal Disclaimer and the $65 fee, the petition is **GRANTED**.

A review of Office records show that petitioner's deposit account was charged twice for the $750 petition fee on April 3, 2006 and on August 8, 2006. The record also shows that on August 8, 2006, the Office charged the $65 Terminal Disclaimer fee twice to petitioner's deposit account. Since a renewed petition under 37 CFR 1.137(b) does not require a petition fee and since the Terminal Disclaimer fee was mistakenly charged twice, a total of $815 will be credited to petitioner's deposit account.

This application file is being referred to the Office of Publications for further processing into a patent.

Telephone inquiries concerning this decision should be directed to the undersigned at (571) 272-3226.

Andrea Smith
Petitions Examiner
Office of Petitions

UNITED STATES PATENT AND TRADEMARK OFFICE

Commissioner for Patents
United States Patent and Trademark Office
P.O. Box 1450
Alexandria, VA 22313-1450
www.uspto.gov

BRENDAN J. KENNEDY
OSTROLENK FABER GERB & SOFFEN LLP
1180 AVENUE OF THE AMERICAS
NEW YORK, NY 10036-8403

COPY MAILED

JUL 0 2 2004

OFFICE OF PETITIONS

In re Application of	:	
Dilip R. Mehta et al	:	
Application No. 29,178,717	:	NOTICE
Filed: March 28, 2003	:	
Attorney Docket No. D/3966-115 (DIV)		

This is a notice regarding your request for acceptance of a fee deficiency submission under 37 CFR 1.28. On September 1, 1998, the Court of Appeals for the Federal Circuit held that 37 CFR 1.28(c) is the sole provision governing the time for correction of the erroneous payment of the issue fee as a small entity. **See DH Technology v. Synergystex International, Inc. 154 F.3d 1333, 47 USPQ2d 1865 (Fed. Cir. Sept. 1, 1998).**

The Office no longer investigates or rejects original or reissue applications under 37 CFR 1.56. **1098 Off. Gaz. Pat. Office 502 (January 3, 1989)**. Therefore, nothing in this Notice is intended to imply that an investigation was done.

Your fee deficiency submission under 37 CFR 1.28 is hereby **ACCEPTED**.

Inquiries related to this communication should be directed to the Office of Petitions Staff at (703) 305-9285.

This file is being forwarded to Technology Center AU 2914.

Irvin Dingle
Petitions Examiner
Office of Petitions
Office of the Deputy Commissioner
for Patent Examination Policy

UNITED STATES PATENT AND TRADEMARK OFFICE

COMMISSIONER FOR PATENTS
UNITED STATES PATENT AND TRADEMARK OFFICE
P.O. BOX 1450
ALEXANDRIA, VA 22313-1450
www.uspto.gov

Paper No.

DESIGN IP-DEPT. MOT
5000 W. TILGHMAN STREET
SUITE 153
ALLENTOWN, PA 18104

COPY MAILED
MAR 04 2004
OFFICE OF PETITIONS

In re Application of :
Rausch et al. :
Application No. 29/178,807 :
Filed: March 31, 2003 :
Attorney Docket No. :
MOT-CS90094 :

This is a decision on the Petition to Correct Filing Date Under 37 CFR § 1.10(d), filed June 21, 2003, requesting that the above-identified application be accorded a filing date of March 31, 2003, rather than the presently accorded filing date of April 1, 2003.

Petitioner alleges that the application was deposited in Express Mail service on March 31, 2003. Petitioner has filed the appropriate documentary and corroborating evidence demonstrating that March 31, 2003 was the date the correspondence was deposited Express Mail Post Office to Addressee.

In view of the above, the petition is **granted**. No fee is necessary.

This application file will be forwarded to the Office of Initial Patent Examination for correction of the filing date to March 31, 2003.

Telephone inquiries concerning this matter should be directed to the undersigned at (703) 305-0014.

Derek L. Woods
Petitions Attorney
Office of Petitions

IN THE UNITED STATES PATENT & TRADEMARK OFFICE

COMMUNICATION		
	Application Number	29/178,807
	Filing Date	March 31, 2003
	First Named Inventor	Kevin A. RAUSCH
	TITLE	COMMUNICATION DEVICE
	Confirmation Number	4443
	Group Art Unit	2900
	Examiner Name	Not yet known
	Attorney Docket Number	MOT-CS90094

To: Commissioner for Patents
P.O. Box 1450
Alexandria, VA 22313-1450

Applicants received a Decision dated March 4, 2004 granting a petition to correct the filing date to March 31, 2003 (copy enclosed). Upon receipt of a Notice of Allowance dated April 21, 2004, Applicants note that the incorrect filing date of April 1, 2003 appears thereon.

Accordingly, Applicants respectfully request that USPTO records be updated to reflect the correct filing date of March 31, 2003.

Should the Office require any further information or documentation regarding this request, please contact the undersigned.

Respectfully submitted,
RAUSCH ET AL.

By _____
Damon A. Neagle
Reg. No. 44,964
Attorney for Applicants

Date submitted: April 30, 2004

Design IP
5000 W. Tilghman St., Ste 153
Allentown, PA 18104
610.395.4900

PAGE 2/3 * RCVD AT 4/30/2004 3:25:39 PM [Eastern Daylight Time] * SVR:USPTO-EFXRF-1/1 * DNIS:8729306 * CSID:6106803312 * DURATION (mm-ss):01-14

UNITED STATES PATENT AND TRADEMARK OFFICE

COMMISSIONER FOR PATENTS
UNITED STATES PATENT AND TRADEMARK OFFICE
P.O. BOX 1450
ALEXANDRIA, VA 22313-1450
www.uspto.gov

Paper No.

DESIGN IP-DEPT. MOT
5000 W. TILGHMAN STREET
SUITE 153
ALLENTOWN, PA 18104

COPY MAILED
MAR 04 2004
OFFICE OF PETITIONS

In re Application of :
Rausch et al. :
Application No. 29/178,807 :
Filed: March 31, 2003 :
Attorney Docket No. :
MOT-CS90094 :

This is a decision on the Petition to Correct Filing Date Under 37 CFR § 1.10(d), filed June 21, 2003, requesting that the above-identified application be accorded a filing date of March 31, 2003, rather than the presently accorded filing date of April 1, 2003.

Petitioner alleges that the application was deposited in Express Mail service on March 31, 2003. Petitioner has filed the appropriate documentary and corroborating evidence demonstrating that March 31, 2003 was the date the correspondence was deposited Express Mail Post Office to Addressee.

In view of the above, the petition is **granted**. No fee is necessary.

This application file will be forwarded to the Office of Initial Patent Examination for correction of the filing date to March 31, 2003.

Telephone inquiries concerning this matter should be directed to the undersigned at (703) 305-0014.

Derek L. Woods
Petitions Attorney
Office of Petitions

COPY

RECEIVED
MAR 09 2004
DESIGN IP

UNITED STATES PATENT AND TRADEMARK OFFICE

COMMISSIONER FOR PATENTS
UNITED STATES PATENT AND TRADEMARK OFFICE
P.O. BOX 1450
ALEXANDRIA, VA 22313-1450
www.uspto.gov

#5

IRWIN C. ALTER
SUITE 1650
19 S. LaSALLE STREET
CHICAGO, IL 60603

In re Application of	:
Michael D. Moffa	:
Serial No.: 29/178,819	: PETITION DECISION
Filed: March 28, 2003	:
Attorney Docket No.: 23100	:

This is a decision on applicant's Petition, which is being treated as a Petition to Revive under 37 CFR 1.137(a), filed October 1, 2003, to revive the above identified abandoned application based on unavoidable circumstances.

A review of the file history shows that the Office mailed a Notice of Allowance and Issue Fee Due to applicant on June 12, 2003, giving a three month period of time to pay the Issue fee. As no response was received by September 12, 2003, the application was abandoned. This petition followed.

A petition under 37 CFR 1.137(a), as revised December 1, 1997, requires (1) a petition and petition fee of $55.00 (for a small entity), (2) the proposed response, (3) a terminal disclaimer and disclaimer fee of $55.00 (for a small entity) in any design application, and (4) an adequate showing of the cause of unavoidable delay. Applicant's petition lacks items (3) and (4).

A terminal disclaimer (3) is required for all design application petitions. With respect to item (4) applicant has not shown that the abandonment of the application was *unavoidable*. Applicant should submit evidence, such as docket records and/or a statement from the person who dockets the applications. MPEP 711.03(c). If applicant cannot submit such evidence, applicant may file a petition under 37 CFR 1.137(b) seeking revival of the above-identified application.

The period of time to be disclaimed by applicant is that period of time equivalent to the period of time, in months, between the date of abandonment and the filing of a grantable petition. The period of time will be determined by the Office.

Applicants petition under 37 CFR 1.137(a) is **DISMISSED**. Applicant may file a renewed petition under either 37 CFR 1.137(a) or (b). Any renewed petition must be filed within **TWO MONTHS** in order to be considered timely.

Should there be any questions with respect to this decision, please contact Sandra Morris; by mail addressed to: Director, Technology Center 3700/2900, P.O. Box 1450, Alexandria VA 22313-1450; or by telephone at (703) 305-3102 or by facsimile transmission at (703) 305-5679.

John E. Kittle

John Kittle
Director, Technology Center 3700/2900

UNITED STATES PATENT AND TRADEMARK OFFICE

COMMISSIONER FOR PATENTS
UNITED STATES PATENT AND TRADEMARK OFFICE
P.O. BOX 1450
ALEXANDRIA, VA 22313-1450
www.uspto.gov

I.P.E. JC19
DEC 0 2 2003
PATENT & TRADEMARK OFFICE

IRWIN C. ALTER
SUITE 1650
19 S. LaSALLE STREET
CHICAGO, IL 60603

In re Application of	:
Michael D. Moffa	:
Serial No.: 29/178,819	: PETITION DECISION
Filed: March 28, 2003	:
Attorney Docket No.: 23100	:

This is a decision on applicant's Petition, which is being treated as a Petition to Revive under 37 CFR 1.137(a), filed October 1, 2003, to revive the above identified abandoned application based on unavoidable circumstances.

A review of the file history shows that the Office mailed a Notice of Allowance and Issue Fee Due to applicant on June 12, 2003, giving a three month period of time to pay the Issue fee. As no response was received by September 12, 2003, the application was abandoned. This petition followed.

A petition under 37 CFR 1.137(a), as revised December 1, 1997, requires (1) a petition and petition fee of $55.00 (for a small entity), (2) the proposed response, (3) a terminal disclaimer and disclaimer fee of $55.00 (for a small entity) in any design application, and (4) an adequate showing of the cause of unavoidable delay. Applicant's petition lacks items (3) and (4).

A terminal disclaimer (3) is required for all design application petitions. With respect to item (4) applicant has not shown that the abandonment of the application was *unavoidable*. Applicant should submit evidence, such as docket records and/or a statement from the person who dockets the applications. MPEP 711.03(c). If applicant cannot submit such evidence, applicant may file a petition under 37 CFR 1.137(b) seeking revival of the above-identified application.

The period of time to be disclaimed by applicant is that period of time equivalent to the period of time, in months, between the date of abandonment and the filing of a grantable petition. The period of time will be determined by the Office.

Applicants petition under 37 CFR 1.137(a) is **DISMISSED**. Applicant may file a renewed petition under either 37 CFR 1.137(a) or (b). Any renewed petition must be filed within **TWO MONTHS** in order to be considered timely.

Should there be any questions with respect to this decision, please contact Sandra Morris; by mail addressed to: Director, Technology Center 3700/2900, P.O. Box 1450, Alexandria VA 22313-1450; or by telephone at (703) 305-3102 or by facsimile transmission at (703) 305-5679.

John E. Kittle

John Kittle
Director, Technology Center 3700/2900

UNITED STATES PATENT AND TRADEMARK OFFICE

FEB 3 2004

Commissioner for Patents
United States Patent and Trademark Office
P.O. Box 1450
Alexandria, VA 22313-1450
www.uspto.gov

IRWIN C. ALTER
SUITE 1650
19 S. LASALLE STREET
CHICAGO, IL 60603

#9

In re Application of	:
Michael D. Moffa	:
Serial No.: 29/178,819	: PETITION DECISION
Filed: March 28, 2003	:
Attorney Docket No.: 23100	:

This is a decision on applicant's renewed petition to revive patent application under 37 CFR 1.137(a), filed on December 2, 2003, to revive an unintentionally abandoned application.

Applicant has submitted a grantable petition under 37 CFR 1.137(a).

Applicant's petition is **GRANTED**.

The application will be forwarded to Publication Division for printing as a patent in due course.

Should there be any questions with respect to this decision, please contact Sandra Morris; by mail addressed to: Director, Technology Center 3700/2900, P.O. Box 1450, Alexandria, VA 22313-1450; or by telephone at (703) 305-3102 or by facsimile transmission at (703) 305-5679.

John Kittle
Director, Technology Center 3700/2900

UNITED STATES PATENT AND TRADEMARK OFFICE

Commissioner for Patents
United States Patent and Trademark Office
P.O. Box 1450
Alexandria, VA 22313-1450
www.uspto.gov

STEPHEN E. BELISLE
FITZPATRICK CELLA HARPER & SCINTO
30 ROCKEFELLER PLAZA
NEW YORK, NY 10112-3800

COPY MAILED

JUN 1 5 2004

OFFICE OF PETITIONS

In re Application of	:	
Phillipe Durand	:	
Application No. 29/178,829	:	NOTICE
Filed: March 31, 2003	:	
Attorney Docket No. 400001-2007		

This is a notice regarding your request for acceptance of a fee deficiency submission under 37 CFR 1.28. On September 1, 1998, the Court of Appeals for the Federal Circuit held that 37 CFR 1.28(c) is the sole provision governing the time for correction of the erroneous payment of the issue fee as a small entity. **See DH Technology v. Synergystex International, Inc. 154 F.3d 1333, 47 USPQ2d 1865 (Fed. Cir. Sept. 1, 1998).**

The Office no longer investigates or rejects original or reissue applications under 37 CFR 1.56. **1098 Off. Gaz. Pat. Office 502 (January 3, 1989)**. Therefore, nothing in this Notice is intended to imply that an investigation was done.

Your fee deficiency submission under 37 CFR 1.28 is hereby **ACCEPTED**.

Inquiries related to this communication should be directed to the Office of Petitions Staff at (703) 305-9285.

This file is being forwarded to the Publishing Division.

Irvin Dingle
Petitions Examiner
Office of Petitions
Office of the Deputy Commissioner
for Patent Examination Policy

UNITED STATES PATENT AND TRADEMARK OFFICE

Commissioner for Patents
United States Patent and Trademark Office
P.O. Box 1450
Alexandria, VA 22313-1450
www.uspto.gov

THE PROCTER & GAMBLE COMPANY
INTELLECTUAL PROPERTY DIVISION
WINTON HILL TECHNICAL CENTER – BOX 161
6110 CENTER HILL AVENUE
CINCINNATI, OH 45224

COPY MAILED
JAN 23 2006
OFFICE OF PETITIONS

In re Application of	:	
Steven Hilary Leitch, et al.	:	
Application No. 29/178,894	:	ON PETITION
Filed: April 01, 2003	:	
Attorney Docket No. D832	:	

This is a decision on the petition under 37 CFR 1.137(b), filed November 8, 2005, to revive the above-identified application.

The petition is **GRANTED.**

The above-identified application became abandoned for failure to submit the issue fee in a timely manner in reply to the Notice of Allowance mailed May 6, 2005, which set a statutory period for reply of three (3) months. Accordingly, the above-identified application became abandoned on August 8, 2005.

The petition satisfies the conditions for revival pursuant to the provisions of 37 CFR 1.137(b) in that (1) the reply in the form of payment of the issue fee; (2) the petition fee; and (3) the required statement of unintentional delay have been received. Accordingly, the issue fee is accepted as having been unintentionally delayed.

Telephone inquiries concerning this decision should be directed to the undersigned at (571) 272-3229.

This application matter is being referred to the Publishing Division for further processing.

Retta Williams

Retta Williams
Petitions Examiner
Office of Petitions

UNITED STATES PATENT AND TRADEMARK OFFICE

JUL 16 2004

COMMISSIONER FOR PATENTS
UNITED STATES PATENT AND TRADEMARK OFFICE
P.O. BOX 1450
ALEXANDRIA, VA 22313-1450
www.uspto.go

Frost Brown Todd LLC
2200 PNC Center
201 East Fifth Street
Cincinnati OH 45202

In re Application of
Dominic K Lee
Serial No.: 29/178,926
Filed: April 2, 2003
Attorney Docket No.: 102704/512209

: PETITION DECISION

This is a decision on applicant's Petition under 37 CFR 1.137(b) submitted April 8, 2004, to revive an unintentionally abandoned application.

This application became abandoned for failure to respond to the Notice of Allowance mailed January 2, 2004, which set a three-month statutory period to pay the issue fee. As no response was received by April 2, 2004, the application was abandoned. Applicant then filed this petition.

A grantable petition under 37 CFR 1.137(b), as revised December 1, 1997, requires four items: (1) a petition and petition fee; (2) a complete response if not earlier made; (3) a statement that the entire period of delay in prosecution was unintentional; and (4) a terminal disclaimer and disclaimer fee. Because this petition was filed before the mailing of the Notice of Abandonment, the requirement for a terminal disclaimer has been waived.

Applicant's petition is **GRANTED.**

The Terminal Disclaimer fee of $55.00 will be refunded to applicant by Treasury Check in due course.

The application will be forwarded to Issue Branch to be processed as a patent in due course.

Should there be any questions with respect to this decision, please contact Sandra Morris; by mail addressed to: Director, Technology Center 3700/2900, P.O. Box 1450, Alexandria, VA 22313-1450; or by telephone at (571) 272-2622.

John Kittle
Director, Technology Center 3700/2900

UNITED STATES PATENT AND TRADEMARK OFFICE

Commissioner for Patents
United States Patent and Trademark Office
P.O. Box 1450
Alexandria, VA 22313-1450
www.uspto.gov

COPY MAILED

JAN 14 2010

FROST BROWN TODD, LLC
2200 PNC CENTER
201 E. FIFTH STREET
CINCINNATI, OH 45202

In re Patent No. D495,657	:	
Issued: September 7, 2004	:	
Application No. 29/178,926	:	NOTICE
Filed: April 2, 2003	:	
Attorney Docket No. 102704/512209	:	

This is a notice regarding your request for acceptance of a fee deficiency submission under 37 CFR 1.28.

The Office no longer investigates or rejects original or reissue patent under 37 CFR 1.56. **1098 Off. Gaz. Pat. Office 502 (January 3, 1989)**. Therefore, nothing in this Notice is intended to imply that an investigation was done.

Your fee deficiency submission under 37 CFR 1.28 is hereby **ACCEPTED**.

Sherry D. Brinkley
Petitions Examiner
Office of Petitions

UNITED STATES PATENT AND TRADEMARK OFFICE

SEP 08 2004

COMMISSIONER FOR PATENTS
UNITED STATES PATENT AND TRADEMARK OFFICE
P.O. BOX 1450
ALEXANDRIA, VA 22313-1450
www.uspto.gov

BERNARD LEWIS CABEY
606 EAST 239TH STREET
APT. 2B, SIDE ENTRANCE
BRONX NY 10470

In re Application of	:
Bernard Cabey	:
Serial No.: 29/178,954	:
Filed: April 2, 2003	: PETITION DECISION
Attorney Docket No.:	:
	:

This is a decision on applicant's telephone inquiry regarding Withdraw of the Notice of Abandonment on August 10, 2004.

A review of the file history shows that the Office mailed a Notice of Allowance and Issue Fee Due on November 24, 2003, setting a three-month period to pay the issue. As no response was received by February 24, 2004, a Notice of Abandonment was mailed on August 6, 2004. This petition followed.

Applicant has stated that the Notice of Allowance was not received.

> M.P.E.P. 711.03(c) gives appropriate guidance as to how to proceed when an Office action is not received. To establish non-receipt of an Office action, applicant must include a statement, attesting to the fact that applicant did not receive the communication, the showing required to establish non-receipt of an Office communication must include a statement from the practitioner stating that the Office communication was not received by the practitioner and attesting to the fact that a search of the file jacket and docket records indicates that the Office communication was not received. A copy of the docket record where the non-received Office communication would have been entered had it been received and docketed must be attached to and referenced in practitioner's statement. See Notice entitled "Withdrawing the Holding of Abandonment When Office Actions Are Not Received," 1156 O.G. 53 (November 16, 1993).
>
> The showing outlined above may not be sufficient if there are circumstances that point to a conclusion that the Office action may have been lost after receipt rather than a conclusion that the Office action was lost in the mail (e.g., if the practitioner has a history of not receiving Office actions). Evidence of non-receipt of an Office communication or action (e.g., Notice of Abandonment or an advisory action) other than that action to which reply was required to avoid abandonment would not warrant withdrawal of the holding of abandonment.

Since applicant is not an attorney, applicant should submit of verified statement and any additional evidence which would show that applicant did not in fact receive the communication from the Office. The statement and evidence should address the following questions: Where and how does applicant receive mail? How is the mail distributed? Does anyone else have access to or open the mail? Are there other incidents of lost or undelivered mail?

Should applicant be certain of the non-receipt of the Rejection, a petition under 37 CFR 1.181 may be submitted; however the petition **would require proof of non-receipt** of the Office Action, as stated above.

However, applicant is advised that he originally provided a different apartment number in his patent application than he gave the Petitions Examiner on the telephone.

RESIDENCE 606 EAST 239TH ST. #1, BRONX, N.Y. 10470
CITIZENSHIP U.S.A.
POST OFFICE ADDRESS SAME AS ABOVE

Unless applicant moved after the Notice of Allowance was mailed, it would seem that applicant did not receive the Office action due to a failure to file a Change of Address with the Office. The Notice of Allowance was mailed to the above address, and not Apartment 2B, side entrance, as applicant has now stated as his address. In this case, a Petition under 37 CFR 1.137(b) should instead be submitted. A grantable petition under 37 CFR 1.137(b), as revised December 1, 1997, requires four items: (1) a petition and petition fee; (2) a complete response if not earlier made; (3) a statement that the entire period of delay in prosecution was unintentional; and (4) a terminal disclaimer and disclaimer fee. A copy of this petition has been enclosed.

Should there be any questions with respect to this decision, please contact Sandra Morris; by mail addressed to: Director, Technology Center 3700/2900, P.O. Box 1450, Alexandria, VA 22313-1450; or by telephone at (571) 272-2622.

John Kittle
Director, Technology Center 3700/2900

PET DEC

UNITED STATES PATENT AND TRADEMARK OFFICE

COMMISSIONER FOR PATENTS
UNITED STATES PATENT AND TRADEMARK OFFICE
P.O. BOX 1450
ALEXANDRIA, VA 22313-1450
www.uspto.gov

BERNARD LEWIS CABEY
606 EAST 239TH STREET
APT. B2, SIDE ENTRANCE
BROWNX NY 10470

FEB 17 2005

In re Application of
Bernard Cabey
Serial No.: 29/178,954
Filed: April 2, 2003
Attorney Docket No.:

: PETITION DECISION

This is in response to applicant's renewed Petition under 37 CFR 1.137b, which is being treated as a Petition under 37 CFR 1.181, received February 8, 2005. The first copy of applicant's response was apparently sent by facsimile to Director John Kittle on November 8, 2004, which was not matched with this application.

Applicant is strongly advised that all correspondence should be sent in writing; a Change of Address has still not been submitted by applicant. When applicant submits his address in writing, in the form of a Change of Address form, it is unlikely that there will be confusion regarding apartment numbers. A Change of Address form has been included with this petition decision.

Furthermore, it is also requested that all correspondence be sent in writing by mail to the address that applicant is given with each office action. The numerous e-mails, phone calls and faxes sent to examiners, petitions examiners, and group directors are not accelerating the prosecution of applicant's patent application.

In the telephone conversation of August 10, 2004, applicant contacted the Office regarding his abandoned application, and accused the Patent Office of mailing the Notice of Allowance to the wrong address. It was by his own admission, in telling the petitions examiner his address, and by comparing this with the address applicant had given in the patent application, that it was determined that the new address did not match that of record in the application.

A review of the file history shows that a Notice of Allowance was mailed November 24, 2003, setting a three month statutory period to pay the Issue fee. As no response was submitted by February 24, 2004, a Notice of Abandonment was mailed on August 6, 2004.

Applicant has stated that while the mailbox number had changed, this would not cause the Notice to be misdelivered by the Post Office, as he has had the same mail carrier for several years. It was also submitted that there is not a history of undelivered mail, and no one else has access to the mail.

Therefore, the Notice of Abandonment will be rescinded and the case will be returned to pending status.

Applicant's petition is **GRANTED.**

The application will be promptly forwarded to the Examiner for remailing of the Notice of Allowance action in due course.

Should there be any questions with respect to this decision, please contact Sandra Morris; by mail addressed to: Director, Technology Center 1700/2900, P.O. Box 1450, Alexandria, VA 22313-1450; or by telephone at (571) 272-2622.

Jacqueline Stone
Director, Technology Center 1700/2900

MAR 1 4 2005
PATENT & TRADEMARK OFFICE

UNITED STATES PATENT AND TRADEMARK OFFICE

COMMISSIONER FOR PATENTS
UNITED STATES PATENT AND TRADEMARK OFFICE
P.O. BOX 1450
ALEXANDRIA, VA 22313-1450
www.uspto.gov

BERNARD LEWIS CABEY
606 EAST 239TH STREET
APT. B2, SIDE ENTRANCE
BROWNX NY 10470

FEB 17 2005

In re Application of
Bernard Cabey
Serial No.: 29/178,954
Filed: April 2, 2003
Attorney Docket No.:

: PETITION DECISION

This is in response to applicant's renewed Petition under 37 CFR 1.137b, which is being treated as a Petition under 37 CFR 1.181, received February 8, 2005. The first copy of applicant's response was apparently sent by facsimile to Director John Kittle on November 8, 2004, which was not matched with this application.

Applicant is strongly advised that all correspondence should be sent in writing; a Change of Address has still not been submitted by applicant. When applicant submits his address in writing, in the form of a Change of Address form, it is unlikely that there will be confusion regarding apartment numbers. A Change of Address form has been included with this petition decision.

Furthermore, it is also requested that all correspondence be sent in writing by mail to the address that applicant is given with each office action. The numerous e-mails, phone calls and faxes sent to examiners, petitions examiners, and group directors are not accelerating the prosecution of applicant's patent application.

In the telephone conversation of August 10, 2004, applicant contacted the Office regarding his abandoned application, and accused the Patent Office of mailing the Notice of Allowance to the wrong address. It was by his own admission, in telling the petitions examiner his address, and by comparing this with the address applicant had given in the patent application, that it was determined that the new address did not match that of record in the application.

A review of the file history shows that a Notice of Allowance was mailed November 24, 2003, setting a three month statutory period to pay the Issue fee. As no response was submitted by February 24, 2004, a Notice of Abandonment was mailed on August 6, 2004.

Applicant has stated that while the mailbox number had changed, this would not cause the Notice to be misdelivered by the Post Office, as he has had the same mail carrier for several years. It was also submitted that there is not a history of undelivered mail, and no one else has access to the mail.

Therefore, the Notice of Abandonment will be rescinded and the case will be returned to pending status.

Applicant's petition is **GRANTED.**

The application will be promptly forwarded to the Examiner for remailing of the Notice of Allowance action in due course.

Should there be any questions with respect to this decision, please contact Sandra Morris; by mail addressed to: Director, Technology Center 1700/2900, P.O. Box 1450, Alexandria, VA 22313-1450; or by telephone at (571) 272-2622.

Jacqueline Stone
Director, Technology Center 1700/2900

UNITED STATES PATENT AND TRADEMARK OFFICE

Commissioner for Patents
United States Patent and Trademark Office
P.O. Box 1450
Alexandria, VA 22313-1450
www.uspto.gov

FROST BROWN TODD LLC
2200 PNC Center
201 E. Fifth Street
Cincinnati OH 45202-4182

COPY MAILED

DEC 14 2009

OFFICE OF PETITIONS

In re Application of	:	
Dominic K. Lee	:	
Patent No. D,492,253	:	NOTICE
Application No. 29/178,978	:	
Filed: April 2, 2003	:	
Attorney Docket No. 102704/512210		

This is a notice regarding your request for acceptance of a fee deficiency submission under 37 CFR 1.28.

The Office no longer investigates or rejects original or reissue patent under 37 CFR 1.56. **1098 Off. Gaz. Pat. Office 502 (January 3, 1989)**. Therefore, nothing in this Notice is intended to imply that an investigation was done.

Your fee deficiency submission under 37 CFR 1.28 is hereby **ACCEPTED**.

This patent is no longer entitled to small entity status. Accordingly, all future fees paid in this patent must be paid at the large entity rate.

Inquiries related to this communication should be directed to Terri Johnson at (571) 272-2991.

Chris Bottorff
Petitions Examiner
Office of Petitions

UNITED STATES PATENT AND TRADEMARK OFFICE

Commissioner for Patents
United States Patent and Trademark Office
P.O. Box 1450
Alexandria, VA 22313-1450
www.uspto.gov

COPY MAILED
MAR 2 1 2006
OFFICE OF PETITIONS

FRANK M. GASPARO
BAKER & MCKENZIE LLP
1114 AVENUE OF THE AMERICAS
NEW YORK NY 10036

In re Application of	:	
LUBKING	:	DECISION
Application No. 29/179,089	:	ON PETITION
Filed: April 3, 2003	:	
Attorney Docket No. 56145473-87	:	

This is a decision on the petition under 37 CFR 1.137(b), filed November 7, 2005, to revive the above-identified application.

The petition is **GRANTED**.

The application became abandoned for failure submit the issue fee in a timely manner in reply to the Notice of Allowance and Fee(s) Due, mailed May 26, 2005, which set a statutory period for reply of three (3) months. Accordingly, the application became abandoned on August 27, 2005.

The petition satisfies the conditions for revival pursuant to the provisions of 37 CFR 1.137(b) in that (1) the reply in the form of the issue fee; (2) the petition fee of $1500; (3) the required statement of unintentional delay; and (4) the terminal disclaimer and its requisite fee as required by 37 CFR 1.137(d) have been received. Accordingly, the issue fee payment is accepted as having been unintentionally delayed.

The address of record differs from that on the submitted petition. While a courtesy copy of this decision is being mailed to the address on the petition, all future correspondence will be directed to the address currently of record until appropriate instructions are received.

Telephone inquiries concerning this decision should be directed to undersigned at (571) 272-4787.

The application matter is referred to the Office of Patent Publication.

Denise Pothier
Petitions Examiner
Office of Petitions

cc: BAKER & MCKENZIE LLP
805 THIRD AVENUE, 29TH FLOOR
NEW YORK NY 10022

enc: PTO-948 (Notice of Draftsperson's Patent Drawing Review)

UNITED STATES PATENT AND TRADEMARK OFFICE

#7

COMMISSIONER FOR PATENTS
UNITED STATES PATENT AND TRADEMARK OFFICE
P.O. BOX 1450
ALEXANDRIA, VA 22313-1450
www.uspto.gov

OSTROLENK FABER GERB & SOFFEN
1180 AVENUE OF THE AMERICAS
NEW YORK NY 10036-8403

APR 6 2005

In re Application of
Lois Hill
Serial No.: 29/179,092
Filed: April 2, 2003
Attorney Docket No.: D/1726-38

: PETITION DECISION

This is in response to applicant's Petition to Withdraw Holding of Abandonment, which is being treated as a Petition under 37 CFR 1.181, filed June 21, 2004, and again on February 7, 2005, based on having responded to the Office action. The delay in acting upon this petition is regretted.

A review of the file history shows that a Notice to File Missing Parts was mailed June 9, 2003, setting a two month period to submit a signed oath or declaration and a surcharge. As no response was submitted by August 11, 2003, a Notice of Abandonment was mailed on June 3, 2004. This petition followed.

Applicant has provided a copy of the response, which includes a Certificate of Mailing date of August 8, 2003 and an Express Mail Receipt. Therefore, the response was timely filed, and the application was clearly abandoned in error.

Applicant's petition is **GRANTED.**

The application will be promptly forwarded to an Examiner for initial examination in due course.

Should there be any questions with respect to this decision, please contact Sandra Morris; by mail addressed to: Director, Technology Center 1700/2900, P.O. Box 1450, Alexandria, VA 22313-1450; or by telephone at (571) 272-2622.

JMStone
Jacqueline Stone
Director, Technology Center 1700/2900

UNITED STATES PATENT AND TRADEMARK OFFICE

Commissioner for Patents
United States Patent and Trademark Office
P.O. Box 1450
Alexandria, VA 22313-1450
www.uspto.gov

DEC 07 2004

FRANK J. JORDAN
JORDAN AND HAMBURG LLP
122 EAST 42ND STREET
SUITE 4000
NEY YORK, NY 10168

In re Application of	:	
Tomoo Miyagawa	:	
Application No. 29/179,129	:	PETITION DECISION
Filed: April 4, 2003	:	
Attorney Docket No. F-7796	:	

This is a decision on the petition under 37 CFR 1.181 received September 23, 2004, to acknowledge receipt of the certified Japanese priority application.

The petition is **GRANTED**.

The evidence submitted with the petition including a copy of the letter forwarding the certified priority document, copy of the first page of the Japanese priority document and return post card receipt establishes that the certified copy of Japanese application No. 2002-027234 was received in the Patent and Trademark Office on June 2, 2003. However, a review of the image file wrapper application, (IFW), reveals that the aforementioned letter and certified copy of the Japanese priority document are not part of the official record of this application. Therefore, in order to make the official record of the application complete, petitioner is requested to submit a complete copy of the certified Japanese priority document in response to this petition decision.

A supplemental Notice of Allowability acknowledging receipt of the certified copy of Japanese application No. 2002-027234 will be mailed out in due course. In addition, the bibliographic data sheet will be updated to reflect that the conditions of 35 U.S.C. 119 (a-d) have been met.

Should there be any questions with regard to this letter please contact James Gandy, by letter addressed to the Director, Technology Center 3700/2900, P.O. Box 1450 Alexandria, VA 22313-1450, or by telephone at (571) 272-2579.

John Kittle
Director, Technology Center 3700/2900

Best Available Copy

OIPE JC48 APR 0 1 2005 PATENT & TRADEMARK OFFICE

Docket No. F-7796

OIPE JC48 MAR 3 1 2005 PATENT & TRADEMARK OFFICE
CANCELLED

IN THE UNITED STATES PATENT AND TRADEMARK OFFICE

Applicant	:	Tomoo MIYAGAWA
U.S. Design No.	:	D502,730
Issued	:	March 8, 2005
Serial No.	:	29/179,129
Filed	:	April 4, 2003
For	:	DEVELOPER SUPPLYING DEVICE FOR IMAGE FORMING APPARATUS
Customer No.	:	000028107

Certificate of Mailing Under 37 CFR 1.8

I hereby certify that this correspondence is being deposited with the United States Postal Service as first class mail in an envelope addressed to Commissioner for Patents, P.O. Box 1450, Alexandria, VA 22313-1450 on March 30, 2005.

Frank J. Jordan — 03/30/05
(Name) (Signature and Date)

Attn: Mr. James Gandy
Director, Technology Center 3700/2900
P.O. Box 1450
Alexandria, VA 22313-1450

FORWARDING OF COPY OF CERTIFIED JAPANESE PRIORITY DOCUMENT AS REQUESTED IN THE PETITION DECISION DATED DECEMBER 7, 2004

Sir:

In the Petition Decision dated December 7, 2004 (copy enclosed) the Patent Office requested the Petitioner to submit a complete copy of the Certified Japanese

Priority Document. In accordance with this request, attached hereto is a complete copy of applicant's Japanese Priority Application 2002-027234 filed October 4, 2002.

U.S. Application No. 29/179,129 issued as U.S. Design No. D502,730 on March 8, 2005 (copy enclosed).

It is believed that the enclosed copy of the Certified Japanese Priority requirement meets the requirement of the Petition Decision dated December 7, 2004. If there are any further questions, please call the undersign attorney at (212) 986-2340.

It is believed there is no charge for filing this paper. However, if there is, please charge to Deposit Account 10-1250.

Respectfully submitted,

JORDAN AND HAMBURG LLP

By _____
Frank J. Jordan
Reg. No. 20,456
Attorney for Applicants

Jordan and Hamburg LLP
122 East 42nd Street
New York, New York 10168
(212) 986-2340

FJJ/cj
Enc. Complete copy of Japanese Priority Application 2002-027234 filed October 4, 2002

Copy of Petition Decision dated December 7, 2004

Copy of U.S. Design No. D502,730.

UNITED STATES PATENT AND TRADEMARK OFFICE

Commissioner for Patents
United States Patent and Trademark Office
P.O. Box 1450
Alexandria, VA 22313-1450
www.uspto.gov

OIPE JC49 MAR 3 2005 PATENT & TRADEMARK OFFICE
CANCELLED
OIPE JC48 APR 0 1 2005 PATENT & TRADEMARK OFFICE
LAW OFFICES OF JORDAN AND HAMBURG LLP
RECEIVED DEC 1 3 2004
122 EAST 42ND STREET NY

DEC 0 7 2004

FRANK J. JORDAN
JORDAN AND HAMBURG LLP
122 EAST 42ND STREET
SUITE 4000
NEY YORK, NY 10168

In re Application of	:
Tomoo Miyagawa	:
Application No. 29/179,129	: PETITION DECISION
Filed: April 4, 2003	:
Attorney Docket No. F-7796	:

This is a decision on the petition under 37 CFR 1.181 received September 23, 2004, to acknowledge receipt of the certified Japanese priority application.

The petition is **GRANTED**.

The evidence submitted with the petition including a copy of the letter forwarding the certified priority document, copy of the first page of the Japanese priority document and return post card receipt establishes that the certified copy of Japanese application No. 2002-027234 was received in the Patent and Trademark Office on June 2, 2003. However, a review of the image file wrapper application, (IFW), reveals that the aforementioned letter and certified copy of the Japanese priority document are not part of the official record of this application. Therefore, in order to make the official record of the application complete, petitioner is requested to submit a complete copy of the certified Japanese priority document in response to this petition decision.

A supplemental Notice of Allowability acknowledging receipt of the certified copy of Japanese application No. 2002-027234 will be mailed out in due course. In addition, the bibliographic data sheet will be updated to reflect that the conditions of 35 U.S.C. 119 (a-d) have been met.

Should there be any questions with regard to this letter please contact James Gandy, by letter addressed to the Director, Technology Center 3700/2900, P.O. Box 1450 Alexandria, VA 22313-1450, or by telephone at (571) 272-2579.

John Kittle
Director, Technology Center 3700/2900

日本国特許庁
JAPAN PATENT OFFICE

別紙添付の書類に記載されている事項は下記の出願書類に記載されている事項と同一であることを証明する。

This is to certify that the annexed is a true copy of the following application as filed with this Office.

出願年月日
Date of Application: ２００２年１０月　４日

出願番号
Application Number: 意願２００２－０２７２３４

出願人
Applicant(s): 京セラミタ株式会社

２００５年　３月　２日

特許庁長官
Commissioner,
Japan Patent Office

小川洋

出証番号　出証意２００５－３００１５９７

【書類名】　意匠登録願
【整理番号】　０３Ｄ００００２
【あて先】　特許庁長官殿
【部分意匠】
【意匠に係る物品】　画像形成機用現像剤供給器
【意匠の創作をした者】
　【住所又は居所】　大阪市中央区玉造１丁目２番２８号　京セラミタ株式会社内
　【氏名】　宮川　智夫
【意匠登録出願人】
　【識別番号】　０００００６１５０
　【住所又は居所】　大阪市中央区玉造１丁目２番２８号
　【氏名又は名称】　京セラミタ株式会社
　【代表者】　関　浩二
　【連絡先】　０６－６７６４－３８８９
【手数料の表示】
　【予納台帳番号】　００３７０２
　【納付金額】　１６０００
【提出物件の目録】
　【物件名】　図面　１
【プルーフの要否】　要
【意匠の説明】　実線で表した部分が部分意匠として意匠登録を受けようとする部分である。「正面図」、「背面図」、「右側面図」、「左側面図」、「平面図」、「底面図」、及び「背面、左側面、平面から見た斜視図」に加え、さらに「Ａ－Ａ断面図」、及び「Ｂ－Ｂ断面図」により、部分意匠として意匠登録を受けようとする部分を特定している。

【書類名】　図面

【正面図】

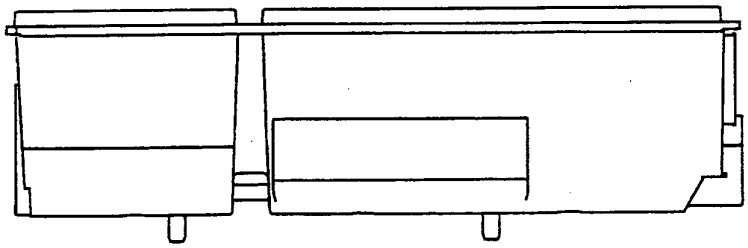

【背面図】

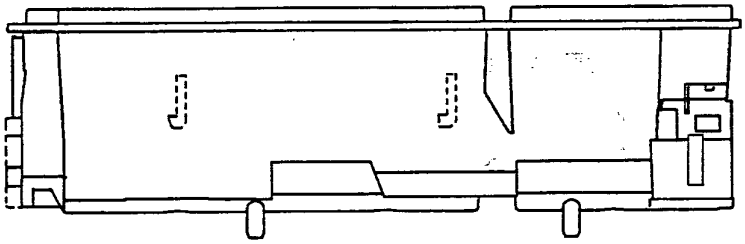

【右側面図】

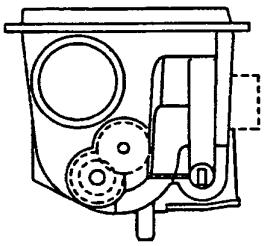

【左側面図】

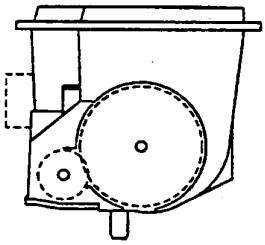

【平面図】

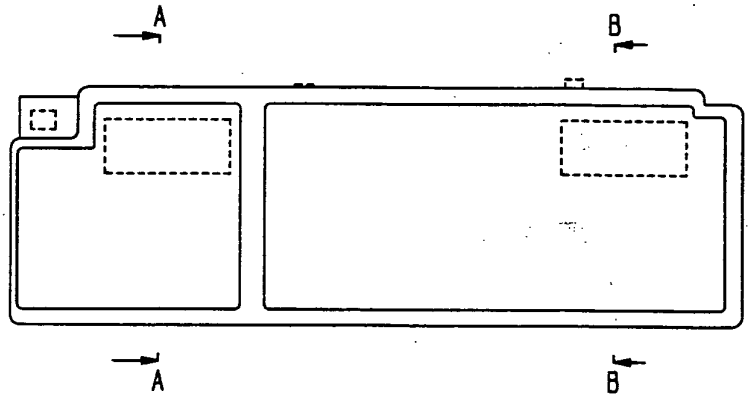

【底面図】

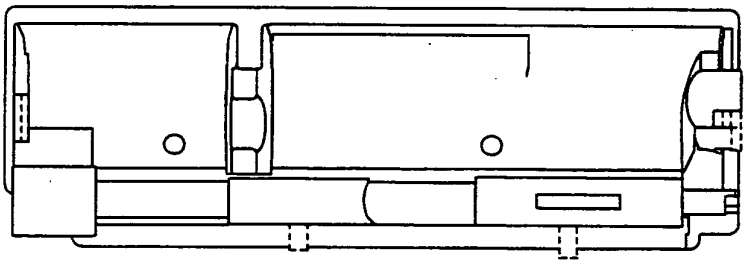

【背面、左側面、平面から見た斜視図】

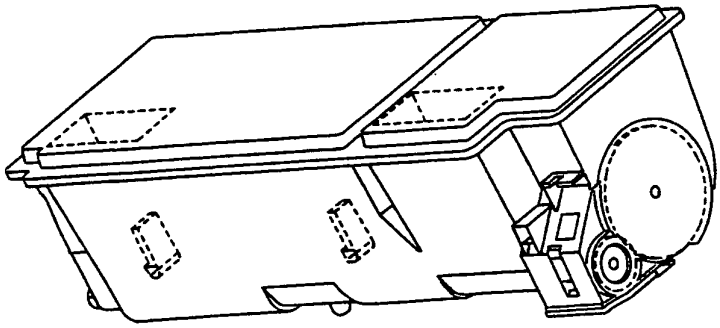

【Ａ－Ａ断面図】

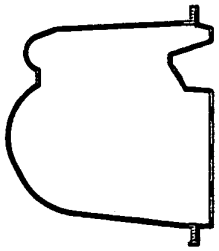

【Ｂ－Ｂ断面図】

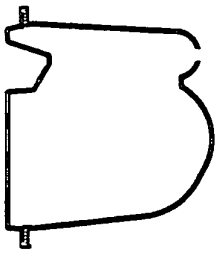

認定・付加情報

出願番号	意願２００２－０２７２３４
受付番号	５０２０１４９５７２０
書類名	意匠登録願
担当官	植田　晴穂　　６９９２
作成日	平成１４年１０月　４日

＜認定情報・付加情報＞

【提出日】　平成１４年１０月　４日

意願２００２－０２７２３４

出　願　人　履　歴　情　報

識別番号　［０００００６１５０］

１．変更年月日　２０００年　１月３１日
［変更理由］　名称変更
住　所　大阪府大阪市中央区玉造１丁目２番２８号
氏　名　京セラミタ株式会社

This Page is Inserted by IFW Indexing and Scanning Operations and is not part of the Official Record

BEST AVAILABLE IMAGES

Defective images within this document are accurate representations of the original documents submitted by the applicant.

Defects in the images include but are not limited to the items checked:

- ☐ BLACK BORDERS
- ☐ IMAGE CUT OFF AT TOP, BOTTOM OR SIDES
- ☐ FADED TEXT OR DRAWING
- ☐ BLURRED OR ILLEGIBLE TEXT OR DRAWING
- ☐ SKEWED/SLANTED IMAGES
- ☐ COLOR OR BLACK AND WHITE PHOTOGRAPHS
- ☐ GRAY SCALE DOCUMENTS
- ☑ LINES OR MARKS ON ORIGINAL DOCUMENT
- ☐ REFERENCE(S) OR EXHIBIT(S) SUBMITTED ARE POOR QUALITY
- ☐ OTHER: _____

IMAGES ARE BEST AVAILABLE COPY.
As rescanning these documents will not correct the image problems checked, please do not report these problems to the IFW Image Problem Mailbox.

UNITED STATES PATENT AND TRADEMARK OFFICE

Commissioner for Patents
United States Patent and Trademark Office
P.O. Box 1450
Alexandria, VA 22313-1450
www.uspto.gov

COHEN SAKAGUCHI & ENGLISH LLP
2040 MAIN STREET, 9TH FLOOR
IRVINE, CA 92614

8/4/05

In re Application of
Thomas Ray Sakaguchi
Serial No.: 29/179,161
Filed: April 4, 2003
Attorney Docket No.: PEA-106

: PETITION DECISION

This is a decision on applicant's petition to revive patent application under 37 CFR 1.316(c), which is being treated as a petition under 37 CFR 1.137(b), submitted February 28, 2005, to revive an unintentionally abandoned application.

This application became abandoned for failure to respond to the Notice of Allowance mailed September 3, 2004, which set a three-month statutory period to submit the Issue Fee. As no response was received by December 3, 2004, the application was abandoned. Applicant then filed this petition.

A grantable petition for a design application under 37 CFR 1.137(b), as revised December 1, 1997, requires four items: (1) a petition and petition fee; (2) a complete response if not earlier made; (3) a statement that the entire period of delay in prosecution was unintentional; and (4) a terminal disclaimer and disclaimer fee. The requirement for a terminal disclaimer has been waived, as the petition was filed before the mailing of the Notice of Abandonment.

Applicant's petition is **GRANTED**.

The application will be forwarded to Publication Division for printing as a patent in due course.

The Issue fee of $400.00 and the Petition fee of $750.00 will be charged to applicant's Deposit Account 50-1105, as directed.

Should there be any questions with respect to this decision, please contact Sandra Morris; by mail addressed to: Director, Technology Center 1700/2900, P.O. Box 1450, Alexandria, VA 22313-1450; or by telephone at (571) 272-2622.

Jacqueline M. Stone

Jacqueline Stone
Director, Technology Center 1700/2900

UNITED STATES PATENT AND TRADEMARK OFFICE

Commissioner for Patents
United States Patent and Trademark Office
P.O. Box 1450
Alexandria, VA 22313-1450
www.uspto.gov

ROBERT M. BARRETT
BELL, BOYD & LLOYD LLC
P. O. BOX 1135
CHICAGO IL 60690-1135

COPY MAILED

MAR 2 1 2006

OFFICE OF PETITIONS

In re Application of	:	
CUADRADO	:	
Application No. 29/179,190	:	ON PETITION
Filed: April 4, 2003	:	
Attorney Docket No. 116766-454	:	

This is a decision on the petition under 37 CFR 1.137(b), filed January 12, 2006, to revive the above-identified application.

The petition is **DISMISSED**.

Any request for reconsideration of this decision must be submitted within TWO (2) MONTHS from the mail date of this decision. Extensions of time under 37 CFR 1.136(a) are permitted. The reconsideration request should include a cover letter entitled "Renewed Petition under 37 CFR 1.137(b)." This is **not** a final agency action within the meaning of 5 U.S.C. § 704.

The application became abandoned for failure to reply within the meaning of 37 CFR 1.113 in a timely manner to the final Office action mailed July 27, 2004, which set a shortened statutory period for reply of three (3) months. No extensions of time under the provisions of 37 CFR 1.136(a) were obtained. Accordingly, the application became abandoned on October 28, 2004.

A grantable petition under 37 CFR 1.137(b) must be accompanied by: (1) the required reply, unless previously filed; (2) the petition fee as set forth in 37 CFR 1.17(m); (3) a statement that the entire delay in filing the required reply from the due date for the reply until the filing of a grantable petition pursuant to 37 CFR 1.137(b) was unintentional; and (4) any terminal disclaimer (and fee as set forth in 37 CFR 1.20(d)) required by 37 CFR 1.137(d). Where there is a question as to whether either the abandonment or the delay in filing a petition under 37 CFR 1.137 was unintentional, the Commissioner may require additional information. See MPEP 711.03(c)(III)(C) and (D). The instant petition lacks above items (1), (3) and (4).

With regards to requirement (1), 37 CFR 114(e) states that the provisions of 37 CFR 114 (Request for continued examination) do not apply to design application. See 37 CFR 114(e)(4). Furthermore, an improper RCE filed in a design application will not be treated as a CPA. See MPEP 201.06(d)(II)(B). An appropriate response to a design application that went abandoned for failure to reply to a final action is the filing of a continued prosecution application (CPA) under 37 CFR 1.53(d). See MPEP 711.03(c)(II)(A)(2)(b)(D). As such, the RCE and response filed on January 12, 2006 with the petition is not the required reply required to grant a petition under 37 CFR 1.137(b). A refund of the $790 fee for filing a RCE will be credited to petitioner's deposit account as authorized.

37 CFR 1.137(b)(3) requires a statement that the entire delay in filing the required reply from the due date for the reply until the filing of a grantable petition pursuant to 37 CFR 1.137(b) was unintentional. The statement contained in the petition varies from the language required by 37 CFR 1.137(b)(3), and any renewed petition should track the language found in 37 CFR 1.137(b).

As for requirement (4) since the above-identified application is a design application, 37 CFR 1.137(d) requires a terminal disclaimer dedicating to the public a terminal part of the term of any patent granted on the application. The period to be disclaimed will be a terminal part of the patent to be granted equivalent to the period of abandonment. The period of abandonment will be computed to be the number of months from the date of abandonment to the date of filing a grantable petition. A terminal disclaimer fee of $130 ($65 if small entity) is required. If the terminal disclaimer is signed by an assignee, the assignee must comply with the requirements of 37 CFR 3.73(b).

Further correspondence with respect to this matter should be addressed as follows:

By Mail: Mail Stop PETITION
Commissioner for Patents
P. O. Box 1450
Alexandria, VA 22313-1450

By hand: U. S. Patent and Trademark Office
Customer Service Window, Mail Stop Petitions
Randolph Building
401 Dulany Street
Alexandria, VA 22314

The centralized facsimile number is (571) 273-8300.

Telephone inquiries concerning this decision should be directed to the undersigned at (571) 272-4787.

Denise Pothier
Petitions Examiner
Office of Petitions

UNITED STATES PATENT AND TRADEMARK OFFICE

Commissioner for Patents
United States Patent and Trademark Office
P.O. Box 1450
Alexandria, VA 22313-1450
www.uspto.gov

BELL, BOYD & LLOYD LLC
P. O. BOX 1135
CHICAGO IL 60690-1135

COPY MAILED

JUN 0 5 2006

OFFICE OF PETITIONS

In re Application of :
CUADRADO :
Application No. 29/179,190 :
Filed: April 4, 2003 :
Attorney Docket No. 116766-454 :

DECISION
ON PETITION

This is a decision on a renewed petition under 37 CFR 1.137(b), filed April 18, 2006, to revive the above-identified application.

The petition is **GRANTED**.

The application became abandoned for failure to reply within the meaning of 37 CFR 1.113 in a timely manner to the final Office action mailed July 27, 2004, which set a shortened statutory period for reply of three (3) months. No extensions of time under the provisions of 37 CFR 1.136(a) were obtained. Accordingly, the application became abandoned on October 28, 2004.

The petition satisfies the conditions for revival pursuant to the provisions of 37 CFR 1.137(b) in that (1) the reply in the form of a CPA and the requisite fee; (2) the petition fee of $1500; (3) the required statement of unintentional delay have been received; and (4) a terminal disclaimer (and fee set forth in 37 CFR 1.20(d)) as required by 37 CFR 1.137(d) have been received. Accordingly, the reply to the final rejection of July 27, 2004 is accepted as having been unintentionally delayed.

Telephone inquiries concerning this decision should be directed to the undersigned at (571) 272-4787.

The application matter is being forwarded to Technology Center Art Unit 2914.

Denise Pothier

Denise Pothier
Petitions Examiner
Office of Petitions

UNITED STATES PATENT AND TRADEMARK OFFICE

AUG 7 2003

COMMISSIONER FOR PATENTS
UNITED STATES PATENT AND TRADEMARK OFFICE
P.O. BOX 1450
ALEXANDRIA, VA 22313-1450
www.uspto.gov

#3

JONATHAN FEUCHTWANG
SUITE 2400
180 N. LASALLE ST.
CHICAGO, IL 60601

In re Application of	:	
Richard Agemura	:	
Serial No.: 29/179,191	:	DECISION ON PETITION
Filed: April 4, 2003	:	
For: Military Service Headstone Medallion	:	

This is in response to applicants' petition filed April 4, 2003, to make the above-identified application special under the provisions of 37 CFR 1.102(c), based on the age of the applicant.

Applicant has satisfied the provisions set forth in M.P.E.P. 708.02, IV. Therefore the petition is **GRANTED**.

The application will be forwarded to the examiner for action on the merits commensurate with this decision.

Should there be any questions with regard to this letter please contact John Kittle by letter addressed to the Director, Technology Center 3700/2900, Washington, DC 20231, or by telephone at (703) 308-0873 or by facsimile transmission at (703) 308-3139.

John E. Kittle
Director,
Technology Center 3700/2900

UNITED STATES PATENT AND TRADEMARK OFFICE

Commissioner for Patents
United States Patent and Trademark Office
P.O. Box 1450
Alexandria, VA 22313-1450
www.uspto.gov

SUGHRUE, MION, ZINN, MACPEAK & SEAS
2100 PENNSYLVANIA AVE, N.W.
WASHINGTON, DC 20037

FEB 23 2005

In re Application of :
Koji Nakane :
Serial No.: 29/179,203 : PETITION DECISION
Filed: April 8, 2003 :
Attorney Docket No.: Q75016

This is in response to applicant's Request to Withdraw Abandonment under 37 CFR 1.181, submitted December 3, 2004, based on having responded to the Office action.

A review of the file history shows that an Office action was mailed November 28, 2003, setting a two month shortened statutory period of time to respond. As no response was received by January 28, 2004, a Notice of Abandonment was mailed on October 25, 2004.

Applicant has provided a copy of the response, which includes a Post Card receipt dated from the Office on January 26, 2004. Therefore, the response was timely filed, and the application was abandoned in error.

Applicant's petition is **GRANTED.**

The application will be promptly forwarded to the Examiner for evaluation of applicant's response in due course.

Should there be any questions with respect to this decision, please contact Sandra Morris; by mail addressed to: Director, Technology Center 1700/2900, P.O. Box 1450, Alexandria, VA 22313-1450; or by telephone at (571) 272-2622.

JMStone

Jacqueline Stone
Director, Technology Center 1700/2900

SPE RESPONSE FOR CERTIFICATE OF CORRECTION

Paper No.: X

DATE : December 17, 2007

TO SPE OF : ART UNIT 2911

SUBJECT : Request for Certificate of Correction for Appl. No.: 29/179,207 Patent No.: D494187 S

A response is requested with respect to a request for a certificate of correction.

With respect to the change(s) requested to correct Office and/or Applicant's errors, should the patent read as shown in the certificate of correction attached herewith or the COCIN document(s), in IFW images for the above-identified patented application? No new matter should be introduced, nor should the scope or meaning of the claims be changed.

If the response is for an IFW, within **7** days, please complete and forward the response, to the employee (named below) via scanning into application images, using document code **COCX**.

DO NOT SENT TO ATTORNEY

If the response is for a paper file wrapper, please complete the response and forward the response with the paper file wrapper, to the employee (named below), within **7** days, to:

Certificates of Correction Branch (CofC)
South Tower - 9A22
Palm Location 7580

You can fax the Directors/SPE response to 571-270-9990

LAMONTE NEWSOME

Certificates of Correction Branch

703-308-9390 ext. 112

Thank You For Your Assistance

The request for issuing the above-identified correction(s) is hereby:

Note your decision on the appropriate box.

- ☐ **Approved** — **All** changes apply.
- ☐ **Approved in Part** — Specify below which changes **do not** apply.
- ☐ **Denied** — State the reasons for denial below.

Comments: _____

Cathron Brooks — **SPE**

2911 — **Art Unit**

UNITED STATES PATENT AND TRADEMARK OFFICE

COMMISSIONER FOR PATENTS
UNITED STATES PATENT AND TRADEMARK OFFICE
P.O. BOX 1450
ALEXANDRIA, VA 22313-1450
www.uspto.gov

JORDAN AND HAMBURG LLP
122 EAST 42ND STREET
SUITE 4000
NEW YORK NY 10168

In re Application of	
Daisuke Ibaraki	:
Serial No.: 29/179,239	:
Filed: April 7, 2003	: PETITION DECISION
Attorney Docket No.: F-7786	:
	:

This is a decision on applicant's Petition under 37 CFR 1.137(b) received February 3, 2005, to revive an unintentionally abandoned application.

This application became abandoned for failure to fully respond to the Notice of Allowance mailed August 12, 2004, which set a three-month statutory period to pay the Issue fee and submit formal drawings. The Issue fee was submitted November 9, 2004; however, as no formal drawings were received by November 12, 2004, a Notice of Abandonment was mailed January 20, 2005. Applicant then filed this petition.

A grantable petition under 37 CFR 1.137(b), as revised December 1, 1997, requires four items: (1) a petition and petition fee; (2) a complete response if not earlier made; (3) a statement that the entire period of delay in prosecution was unintentional; and (4) a terminal disclaimer and disclaimer fee. The requirement for a terminal disclaimer has been waived, as the petition was submitted within one month of the mailing of the Notice of Abandonment.

Applicant's petition is **GRANTED.**

The application will be forwarded to Publications Branch to be issued into a Patent in due course.

Should there be any questions with respect to this decision, please contact Sandra Morris; by mail addressed to: Director, Technology Center 1700/2900, P.O. Box 1450, Alexandria, VA 22313-1450; or by telephone at (571) 272-2622.

JMStone

Jacqueline Stone
Director, Technology Center 1700/2900

UNITED STATES PATENT AND TRADEMARK OFFICE

Commissioner for Patents
United States Patent and Trademark Office
P.O. Box 1450
Alexandria, VA 22313-1450
www.uspto.gov

Paper No. 6

DAMON L. BOYD
SNELL & WILMER L.L.P.
ONE ARIZONA CENTER
400 EAST VAN BUREN
PHOENIX, AZ 85004-2202

COPY MAILED

JUN 16 2004

OFFICE OF PETITIONS

In re Application of	:	
Busch, et al.	:	
Application No. 29/179,273	:	ON PETITION
Filed: April 8, 2003	:	
Attorney Docket No. 15730.1600	:	

This is a decision on the petition under 37 C.F.R. § 1.137(b), filed February 2, 2004, to revive the above-identified application.

The petition is **dismissed.**

Any request for reconsideration of this decision must be submitted within TWO (2) MONTHS from the mail date of this decision. Extensions of time under 37 CFR 1.136(a) are permitted. The reconsideration request should include a cover letter entitled "Renewed Petition under 37 CFR 1.137(b)."

The above-identified application became abandoned for failure to reply in a timely manner to the Notice to File Missing Parts of Application (Notice) mailed June 18, 2003. The Notice set a period for reply of two (2) months from the mail date of the Notice. No extensions of time under the provisions of 37 CFR 1.136(a) were obtained. Accordingly, the above-identified application became abandoned on August 19, 2003.

Effective December 1, 1997, the provisions of 37 CFR 1.137(b) now provide that where the delay in reply was unintentional, a petition may be filed to revive an abandoned application pursuant to 37 CFR 1.137(b). A grantable petition pursuant to 37 CFR 1.137(b) must be accompanied by:

(1) the required reply, unless previously filed. In a nonprovisional application abandoned for failure to prosecute, the required reply may be met by the filing of a continuing application. In an application, abandoned or lapsed for failure to pay the issue fee or any portion thereof, the required reply must be the payment of the issue fee or any outstanding balance thereof.

(2) the petition fee as set forth in 37 CFR 1.17(m);

(3) a statement that the **entire** delay in filing the required reply from the due date for the reply until the filing of a grantable petition pursuant to 37 CFR 1.137(b) was unintentional. The Commissioner may require additional information where there is a question whether the delay was unintentional; and

(4) any terminal disclaimer (and fee set forth in 37 CFR 1.20(d)) required pursuant to 37 CFR 1.137(d).

The instant petition does not satisfy requirement (4) above.

The submission of a terminal disclaimer (and fee under 37 CFR 1.20(d)) is required in a design application. See 37 CFR 1.137(d). Since a terminal disclaimer has not been submitted, the petition must be dismissed.

Please note, pursuant to 37 CFR 1.136, an extension of time must be filed prior to the expiration of the maximum period obtainable for reply to avoid abandonment. Accordingly, since the $1480.00 extension of time submitted with the petition on February 2, 2004 was subsequent to the maximum period obtainable for reply, this fee is unnecessary and will be credited to petitioner's deposit account no. 19-2814.

Further correspondence with respect to this matter should be addressed as follows:

By mail: Mail Stop Petition
Commissioner for Patents
Box 1450
Alexandria, VA 22313

By FAX: (703) 872-9306
Attn: Office of Petitions

By hand: Customer Service Window
2011 South Clark Place
Crystal Plaza Two (left side entrance of building)
Arlington, VA

Telephone inquiries should be directed to the undersigned at (703) 306-9200.

Edward J. Tannouse
Petitions Attorney
Office of Petitions
United States Patent and Trademark Office

UNITED STATES PATENT AND TRADEMARK OFFICE

Commissioner for Patents
United States Patent and Trademark Office
P.O. Box 1450
Alexandria, VA 22313-1450
www.uspto.gov

Paper No. 9

DAMON L. BOYD
SNELL & WILMER L.L.P.
ONE ARIZONA CENTER
400 EAST VAN BUREN
PHOENIX, AZ 85004-2202

COPY MAILED

JUL 2 9 2004

OFFICE OF PETITIONS

In re Application of :
Busch, et al. :
Application No. 29/179,273 : ON PETITION
Filed: April 8, 2003 :
Attorney Docket No. 15730.1600 :

This is a decision on the renewed petition under 37 C.F.R. § 1.137(b), filed July 12, 2004, to revive the above-identified application.

The petition is **GRANTED**.

The above-identified application became abandoned for failure to reply in a timely manner to the Notice to File Missing Parts of Application (Notice) mailed June 18, 2003. The Notice set a period for reply of two (2) months from the mail date of the Notice. No extensions of time under the provisions of 37 CFR 1.136(a) were obtained. Accordingly, the above-identified application became abandoned on August 19, 2003.

The terminal disclaimer filed July 12, 2004 under 37 CFR 1.137(d) has been entered and made of record. 37 CFR 1.137(d)(1)[1] states that a terminal disclaimer filed pursuant to this rule in a design application must dedicate to the public a terminal part of the term of any patent granted thereon equivalent to the period of abandonment of the application.

---

[1] Effective September 20, 2000 (65 Fed. Reg. 54674, September 8, 2000).

Please note, pursuant to 37 CFR 1.136, an extension of time must be filed prior to the expiration of the maximum period obtainable for reply to avoid abandonment. Accordingly, since the $1480.00 extension of time submitted with the renewed petition on July 12, 2004 was subsequent to the maximum period obtainable for reply, this fee is unnecessary and will be credited to petitioner's deposit account no. 19-2814.

The file is being forwarded to the Office of Initial Patent Examination for further processing.

Telephone inquiries concerning this matter may be directed to the undersigned at (703) 306-9200.

Telephone inquiries should be directed to the undersigned at (703) 306-9200.

Edward J. Tannouse
Petitions Attorney
Office of Petitions
United States Patent and Trademark Office

UNITED STATES PATENT AND TRADEMARK OFFICE

Commissioner for Patents
United States Patent and Trademark Office
P.O. Box 1450
Alexandria, VA 22313-1450
www.uspto.gov

Paper No. 6

DAMON L. BOYD
SNELL & WILMER L.L.P.
ONE ARIZONA CENTER
400 EAST VAN BUREN
PHOENIX, AZ 85004-2202

COPY MAILED

JUN 1 0 2004

OFFICE OF PETITIONS

In re Application of :
Busch, et al. :
Application No. 29/179,274 :
Filed: April 8, 2003 :
Attorney Docket No. 15730.1700 :

ON PETITION

This is a decision on the petition under 37 C.F.R. § 1.137(b), filed February 2, 2004, to revive the above-identified application.

The petition is **dismissed.**

Any request for reconsideration of this decision must be submitted within TWO (2) MONTHS from the mail date of this decision. Extensions of time under 37 CFR 1.136(a) are permitted. The reconsideration request should include a cover letter entitled "Renewed Petition under 37 CFR 1.137(b)."

The above-identified application became abandoned for failure to reply in a timely manner to the Notice to File Missing Parts of Application (Notice) mailed June 18, 2003. The Notice set a period for reply of two (2) months from the mail date of the Notice. No extensions of time under the provisions of 37 CFR 1.136(a) were obtained. Accordingly, the above-identified application became abandoned on August 19, 2003.

Effective December 1, 1997, the provisions of 37 CFR 1.137(b) now provide that where the delay in reply was unintentional, a petition may be filed to revive an abandoned application pursuant to 37 CFR 1.137(b). A grantable petition pursuant to 37 CFR 1.137(b) must be accompanied by:

(1) the required reply, unless previously filed. In a nonprovisional application abandoned for failure to prosecute, the required reply may be met by the filing of a continuing application. In an application, abandoned or lapsed for failure to pay the issue fee or any portion thereof, the required reply must be the payment of the issue fee or any outstanding balance thereof.

(2) the petition fee as set forth in 37 CFR 1.17(m);

(3) a statement that the **entire** delay in filing the required reply from the due date for the reply until the filing of a grantable petition pursuant to 37 CFR 1.137(b) was unintentional. The Commissioner may require additional information where there is a question whether the delay was unintentional; and

(4) any terminal disclaimer (and fee set forth in 37 CFR 1.20(d)) required pursuant to 37 CFR 1.137(d).

The instant petition does not satisfy requirement (4) above.

The submission of a terminal disclaimer (and fee under 37 CFR 1.20(d)) is required in a design application. See 37 CFR 1.137(d). Since a terminal disclaimer has not been submitted, the petition must be dismissed.

Please note, pursuant to 37 CFR 1.136, an extension of time must be filed prior to the expiration of the maximum period obtainable for reply to avoid abandonment. Accordingly, since the $1480.00 extension of time submitted with the petition on February 2, 2004 was subsequent to the maximum period obtainable for reply, this fee is unnecessary and will be credited to petitioner's deposit account no. 19-2814.

Further correspondence with respect to this matter should be addressed as follows:

By mail: Mail Stop Petition
Commissioner for Patents
Box 1450
Alexandria, VA 22313

By FAX: (703) 872-9306
Attn: Office of Petitions

By hand: Customer Service Window
2011 South Clark Place
Crystal Plaza Two (left side entrance of building)
Arlington, VA

Telephone inquiries should be directed to the undersigned at (703) 306-9200.

Edward J. Tannouse
Petitions Attorney
Office of Petitions
United States Patent and Trademark Office

UNITED STATES PATENT AND TRADEMARK OFFICE

Commissioner for Patents
United States Patent and Trademark Office
P.O. Box 1450
Alexandria, VA 22313-1450
www.uspto.gov

Paper No. 10

DAMON L. BOYD
SNELL & WILMER L.L.P.
ONE ARIZONA CENTER
400 EAST VAN BUREN
PHOENIX, AZ 85004-2202

COPY MAILED

JUL 0 7 2004

OFFICE OF PETITIONS

In re Application of :
Busch, et al. :
Application No. 29/179,274 : ON PETITION
Filed: April 8, 2003 :
Attorney Docket No. 15730.1700 :

This is a decision on the renewed petition under 37 CFR 1.137(b), filed June 24, 2004, to revive the above-identified application.

The petition is **GRANTED**.

The above-identified application became abandoned for failure to reply in a timely manner to the Notice to File Missing Parts of Application (Notice) mailed June 18, 2003. The Notice set a period for reply of two (2) months from the mail date of the Notice. No extensions of time under the provisions of 37 CFR 1.136(a) were obtained. Accordingly, the above-identified application became abandoned on August 19, 2003.

The terminal disclaimer filed June 24, 2004 under 37 CFR 1.137(d) has been entered and made of record. 37 CFR 1.137(d)(1)[1] states that a terminal disclaimer filed pursuant to this rule in a design application must dedicate to the public a terminal part of the term of any patent granted thereon equivalent to the period of abandonment of the application.

Please note, pursuant to 37 CFR 1.136, an extension of time must be filed prior to the expiration of the maximum period obtainable

[1] Effective September 20, 2000 (65 Fed. Reg. 54674, September 8, 2000).

for reply to avoid abandonment. Accordingly, since the $1480.00 extension of time request submitted with the renewed petition on June 24, 2004 is subsequent to the maximum period obtainable for reply, this fee is unnecessary and will not be charged.

The file is being forwarded to the Office of Initial Patent Examination for further processing.

Telephone inquiries concerning this matter may be directed to the undersigned at (703) 306-9200.

Edward J. Tannouse
Petitions Attorney
Office of Petitions
United States Patent and Trademark Office

UNITED STATES PATENT AND TRADEMARK OFFICE

Commissioner for Patents
United States Patent and Trademark Office
P.O. Box 1450
Alexandria, VA 22313-1450
www.uspto.gov

EUGENE E. RENZ, JR.
EUGENE E. RENZ, JR., P.C.
205 N. MONROE STREET
POST OFFICE BOX 2056
MEDIA PA 19063-9056

COPY MAILED

FEB 1 0 2006

OFFICE OF PETITIONS

In re Application of	:	
Gerhard Waldmann	:	
Application No. 29/179,384	:	ON PETITION
Filed: April 9, 2003	:	
Attorney Docket No. 23121DES.PUS	:	

This is a decision on the petition, filed February 8, 2006, under 37 CFR 1.313(c) to withdraw the above-identified application from issue after payment of the issue fee.

The petition is **DISMISSED**.

37 CFR 1.313(c) provides that:

> Once the issue fee has been paid, the application will not be withdrawn from issue upon petition by the applicant for any reason except:
> (1) Unpatentability of one of more claims, which petition must be accompanied by an unequivocal statement that one or more claims are unpatentable, an amendment to such claim or claims, and an explanation as to how the amendment causes such claim or claims to be patentable;
> (2) Consideration of a submission pursuant to 37 CFR 1.114; or
> (3) Express abandonment of the application. Such express abandonment may be in favor of a continuing application.

See Changes to Application Examination and Provisional Application Practice, Interim Rule, 65 Fed. Reg. 14865, 14873 (Mar. 20, 2000), 1233 Off. Gaz. Pat. Office 47, 54 (Apr. 11, 2000).

The instant petition is not accompanied by any of the above.

Petitioner may consider filing under 37 CFR 1.313(c)(3). Additionally, a CPA (Continued Prosecution Application) may be filed for design applications only, since the filing under 37 CFR 1.114 is not an option for design applications.

A petition under this section will not be effective to withdraw the application from issue unless it is actually received and granted by the appropriate officials before the date of issue.

Further correspondence with respect to this matter should be addressed as follows:

By mail: Mail Stop PETITIONS
Commissioner for Patents
Post Office Box 1450
Alexandria, VA 22313-1450

By hand: Customer Window located at:

Randolph Building
401 Dulany Street
Alexandria, VA 22314

By fax: (571) 273-8300
ATTN: Office of Petitions

Telephone inquiries concerning this decision should be directed to the undersigned at (571) 272-3208.

Karen Creasy

Karen Creasy
Petitions Examiner
Office of Petitions
Office of the Deputy Commissioner
for Patent Examination Policy

SPE RESPONSE FOR CERTIFICATE OF CORRECTION

Paper No.: X

DATE : October 22,2007

TO SPE OF : ART UNIT 2911

SUBJECT : Request for Certificate of Correction for Appl. No.: 29/179,384 Patent No.: D517713 S

A response is requested with respect to a request for a certificate of correction.

With respect to the change(s) requested to correct Office and/or Applicant's errors, should the patent read as shown in the certificate of correction attached herewith or the COCIN document(s), in IFW images for the above-identified patented application? No new matter should be introduced, nor should the scope or meaning of the claims be changed.

If the response is for an IFW, within **7** days, please complete and forward the response, to the employee (named below) via scanning into application images, using document code **COCX**.

DO NOT SENT TO ATTORNEY

If the response is for a paper file wrapper, please complete the response and forward the response with the paper file wrapper, to the employee (named below), within **7** days, to:

Certificates of Correction Branch (CofC)
South Tower - 9A22
Palm Location 7580

You can fax the Directors/SPE response to 571-270-9990

LAMONTE NEWSOME
Certificates of Correction Branch
703-308-9390 ext. 112

Thank You For Your Assistance

The request for issuing the above-identified correction(s) is hereby:
Note your decision on the appropriate box.

- ☑ **Approved** — **All** changes apply.
- ☐ **Approved in Part** — Specify below which changes **do not** apply.
- ☐ **Denied** — State the reasons for denial below.

Comments: _____

CATHRON C. BROOKS
SUPERVISORY PATENT EXAMINER

SPE — 2911 **Art Unit**

SPE S. Reid

SPE RESPONSE FOR CERTIFICATE OF CORRECTION 29/179,455

Paper No.: _____

DATE : 6/15/05

TO SPE OF : ART UNIT 2912

SUBJECT : Request for Certificate of Correction on Patent No.: D504615

A response is requested with respect to the accompanying request for a certificate of correction.

Please complete this form and return with file, within **7** days to:
Palm location **7580, Certificates of Correction Branch – South Tower – 9A22**
If response is for an IFW, **return to employee (named below) via PUBSCofC Team in MADRAS.**
With respect to the change(s) requested, correcting Office and/or Applicant's errors, should the patent read as shown in the certificate of correction (COCIN)? No new matter should be introduced, nor should the scope or meaning of the claims be changed.

Lamonte Newsome

Thank You For Your Assistance

Certificates of Correction Branch
Tel. No. 703-305-8309

The request for issuing the above-identified correction(s) is hereby:
Note your decision on the appropriate box.

- ☒ **Approved** — **All** changes apply.
- ☐ **Approved in Part** — Specify below which changes **do not** apply.
- ☐ **Denied** — State the reasons for denial below.

Comments:
The USPTO filing receipt dated 4/11/03 indicates that a priority document was included.

S. Reid — **SPE**

2912 — **Art Unit**

UNITED STATES PATENT AND TRADEMARK OFFICE

COMMISSIONER FOR PATENTS
UNITED STATES PATENT AND TRADEMARK OFFICE
P.O. BOX 1450
ALEXANDRIA, VA 22313-1450
www.uspto.gov

JOHN TRAN
304 BIRCH GROVE
IRVINE CA 92618

FEB 1 2 2005

In re Application of
Thang Hoang
Serial No.: 29/179,488
Filed: April 11, 2003
Attorney Docket No.: 0004

: PETITION DECISION

This is in response to applicant's Petition to Withdraw Holding of Abandonment, which is being treated as a Petition under 37 CFR 1.181, received October 18, 2004, based on having responded to the Office action. The delay in acting upon this petition is regretted.

A review of the file history shows that a Notice of Allowance was mailed May 19, 2004, setting a three month statutory period to pay the Issue fee and submit formal drawings. The Issue fee was submitted June 2, 2004; however, upon failure to file formal drawings by August 19, 2004, a Notice of Abandonment was mailed on September 30, 2004.

Applicant has stated that he filed formal drawings June 21, 2004, and has submitted copies of the response which included a Certificate of Mailing. Therefore, as the formal drawings were timely submitted, the application will be returned to pending status.

Applicant's petition is **GRANTED.**

The application will be promptly forwarded to Publications to be printed as a patent in due course.

Should there be any questions with respect to this decision, please contact Sandra Morris; by mail addressed to: Director, Technology Center 1700/2900, P.O. Box 1450, Alexandria, VA 22313-1450; or by telephone at (571) 272-2622.

Jacqueline Stone
Director, Technology Center 1700/2900

UNITED STATES PATENT AND TRADEMARK OFFICE

JUN 10 2004

Commissioner for Patents
United States Patent and Trademark Office
P.O. Box 1450
Alexandria, VA 22313-1450
www.uspto.gov

#6

DENTON L ANDERSON, ESQ.
SHELDON & MAK
SUITE 900
225 SOUTH LAKE AVENUE
PASADENA CA 91101

In re Application of	:
Gordon Lane et al.	:
Serial No.: 29/179,587	: PETITION DECISION
Filed: April 10, 2003	:
Attorney Docket No.: 14350	:

This is a decision on applicant's petition to revive patent application under 37 CFR 1.137(b), filed March 24, 2004, to revive an unintentionally abandoned application.

This application became abandoned for failure to respond to the Notice to File Missing Parts of Nonprovisional Application, mailed June 12, 2003, which gave applicant two months to file an oath or declaration and the surcharge. As no response was received, a Notice of Abandonment was mailed March 3, 2004. This petition followed.

A grantable petition under 37 CFR 1.137(b), as revised December 1, 1997, requires four items: (1) a petition and petition fee; (2) a complete response if not earlier made; (3) a statement that the entire period of delay in prosecution was unintentional; and (4) a terminal disclaimer and disclaimer fee. As the petition was filed within one month of receiving the Notice of Abandonment, the requirement for a terminal disclaimer has been waived.

Applicant's petition is **GRANTED**.

The $130.00 surcharge for filing a late Oath or Declaration will be charged to applicant's Deposit Account 19-2090, as directed.

The application will be forwarded to an Examiner for initial examination in due course.

Should there be any questions with respect to this decision, please contact Sandra Morris; by mail addressed to: Director, Technology Center 3700/2900, P.O. Box 1450, Alexandria, VA 22313-1450; or by telephone at (571) 272-2622.

John Kittle
Director, Technology Center 3700/2900

UNITED STATES PATENT AND TRADEMARK OFFICE

Commissioner for Patents
United States Patent and Trademark Office
P.O. Box 1450
Alexandria, VA 22313-1450
www.uspto.gov

OSTROLENK FABER GERB & SOFFEN
1180 AVENUE OF THE AMERICAS
NEW YORK, NY 10036-8403

COPY MAILED
AUG 2 0 2004
OFFICE OF PETITIONS

In re Application of :
Dilip R. Mehta :
Application No. 29/179,694 :
Filed: April 11, 2003 :
Attorney Docket No. D/3966-125 :

ON PETITION

This is a notice regarding your request for acceptance of a fee deficiency submission under 37 CFR 1.28. On September 1, 1998, the Court of Appeals for the Federal Circuit held that 37 CFR 1.28(c) is the sole provision governing the time for correction of the erroneous payment of the issue fee as a small entity. **See DH Technology v. Synergystex International, Inc. 154 F.3d 1333, 47 USPQ2d 1865 (Fed. Cir. Sept. 1, 1998).**

The Office no longer investigates or rejects original or reissue applications under 37 CFR 1.56. **1098 Off. Gaz. Pat. Office 502 (January 3, 1989)**. Therefore, nothing in this Notice is intended to imply that an investigation was done.

Your fee deficiency submission under 37 CFR 1.28 is hereby **ACCEPTED**.

Telephone inquiries concerning this matter may be directed to Retta Williams at (703) 306-5594.

This application matter is being forwarded to Files Repository.

Frances Hicks

Frances Hicks
Petitions Examiner
Office of Petitions
Office of the Deputy Commissioner
for Patent Examination Policy

UNITED STATES PATENT AND TRADEMARK OFFICE

COMMISSIONER FOR PATENTS
UNITED STATES PATENT AND TRADEMARK OFFICE
P.O. BOX 1450
ALEXANDRIA, VA 22313-1450
www.uspto.gov

6/24/05

ANDREW GATHY
P.O. BOX 351
EAST LYME, CT 06333

In re Application of
Greg Burns
Serial No.: 29/179,726
Filed: April 14, 2003
Attorney Docket No.: 14428

: PETITION DECISION

This is a decision on the Petition to Revive under 37 CFR 1.137(b), filed April 12, 2005, to revive an unintentionally abandoned application.

The petition is **DISMISSED**.

This application became abandoned for failure to respond to the Notice of Allowance and Issue Fee due, mailed October 19, 2004, which required formal drawings and the issue fee. As no response was received by January 19, 2005, a Notice of Abandonment was mailed March 14, 2005. This petition followed.

A grantable petition under 37 CFR 1.137(b), as revised December 1, 1997, requires four items: (1) a petition and petition fee; (2) a complete response if not earlier made; (3) a statement that the entire period of delay in prosecution was unintentional; and (4) a terminal disclaimer and disclaimer fee. Applicant's petition lacks item (2), in part.

Applicant is advised that the Issue fee is now $400.00; applicant submitted $245.00 with this petition. Therefore, the remaining balance of $155.00 is still required.

Any renewed petition in order to be considered timely must be filed within TWO MONTHS of the date of mailing of this decision.

Should there be any questions with respect to this decision, please contact Sandra Morris; by mail addressed to: Director, Technology Center 1700/2900, P.O. Box 1450, Alexandria, VA 22313-1450; or by telephone at (571) 272-2622.

Jacqueline Stone
Director, Technology Center 1700/2900

UNITED STATES PATENT AND TRADEMARK OFFICE

COMMISSIONER FOR PATENTS
UNITED STATES PATENT AND TRADEMARK OFFICE
P.O. BOX 1450
ALEXANDRIA, VA 22313-1450
www.uspto.gov

ANDREW D. GATHY
P.O. BOX 351
EAST LYME, CT 06333

COPY MAILED

DEC 0 2 2005

OFFICE OF PETITIONS

In re Application of
Greg Burns
Application No. 29/179,726
Filed: April 14, 2003
Attorney Docket No. 14428

ON PETITION

This is a decision on the renewed petition under 37 CFR 1.137(b) to revive the above-identified application, filed August 17, 2005.

The petition, as supplemented, is found to be in compliance with the requirements of 37 CFR 1.137(b). Accordingly, the petition is **GRANTED**.

The application is being referred to Publishing Division.

Telephone inquires related to this decision should be directed to the undersigned at (571) 272-3204. Telephone inquiries related to processing at Publishing Division should be directed to (703) 305-8283.

Sherry D. Brinkley
Petitions Examiner
Office of Petitions
Office of the Deputy Commissioner
for Patent Examination Policy

UNITED STATES PATENT AND TRADEMARK OFFICE

Commissioner for Patents
United States Patent and Trademark Office
P.O. Box 1450
Alexandria, VA 22313-1450
www.uspto.gov

COPY MAILED

APR 23 2008

OFFICE OF PETITIONS

COZEN O'CONNOR, P.C.
1900 MARKET STREET
PHILADELPHIA, PA 19103-3508

In re Application of :
Lawrence G. Selbiger :
Application No. 29/179,756 : ON PETITION
Filed: April 15, 2003 :
Attorney Docket No. BMCP-0115-US :

This is a decision on the petition, filed November 28, 2007 under 37 CFR 1.137(b) to revive the above-identified application.

The petition is **DISMISSED.**

Any request for reconsideration of this decision must be submitted within TWO (2) MONTHS from the mail date of this decision. Extensions of time under 37 CFR 1.136(a) are permitted. The reconsideration request should include a cover letter entitled "**Renewed Petition under 37 CFR 1.137(b)**." This is **not** final agency action within the meaning of 5 U.S.C. § 704.

The above-identified application became abandoned for failure to reply in a timely manner to the non-final Office action mailed March 22, 2007, which set a shortened statutory period for reply of three (3) months. No extension of time under the provisions of 37 CFR 1.136(a) were obtained. Accordingly, the above-identified application became abandoned on June 23, 2007.

A grantable petition under 37 CFR 1.137(b) must be accompanied by: (1) the required reply, unless previously filed; (2) the petition fee as set forth in 37 CFR 1.17(m); (3) a statement that the entire delay in filing the required reply from the due date for the reply until the filing of a grantable petition pursuant to 37 CFR 1.137(b) was unintentional; and (4) any terminal disclaimer (and fee as set forth in 37 CFR 1.20(d)) required by 37 CFR 1.137(c). Where there is a question as to whether either the abandonment or the delay in filing a petition under 37 CFR 1.137 was unintentional, the Commissioner may require additional information. See MPEP 711.03(c)(III)(C) and (D). The instant petition lack(s) item(s) (4).

The petition does not satisfies the conditions for revival pursuant to the provisions of 37 CFR 1.137(b) in that (4) the terminal disclaimer was not received. Accordingly, this petition can not be revive until the terminal disclaimer is received.

Further correspondence with respect to this matter should be addressed as follows:

By mail: Mail Stop PETITION
Commissioner for Patents
Post Office Box 1450
Alexandria, VA 22313-1450

By hand: Customer Service Window
Randolph Building
401 Dulany Street
Alexandria, VA 22314

By facsimile: (571) 273-8300
ATTN: Office of Petitions

Telephone inquiries concerning this decision should be directed to the undersigned at (571) 272-3210.

Irvin Dingle
Petitions Examiner
Office of Petitions

UNITED STATES PATENT AND TRADEMARK OFFICE

Commissioner for Patents
United States Patent and Trademark Office
P.O. Box 1450
Alexandria, VA 22313-1450
www.uspto.gov

COZEN O'CONNOR, P.C.
1900 MARKET STREET
PHILADELPHIA, PA 19103-3508

COPY MAILED

MAY 07 2008

OFFICE OF PETITIONS

ON PETITION

In re Application of	:	
Lawrence G. Selbiger	:	
Application No. 29/179,756	:	
Filed: April 15, 2003	:	
Attorney Docket No. BMCP-0115-US	:	

This is a decision on the renewed petition filed May 2, 2008 under 37 CFR 1.137(b), to revive the above-identified application.

The petition is **GRANTED.**

Telephone inquiries concerning this decision should be directed to the undersigned at (571) 272-3210.

This matter is being referred to Technology Center AU 2916 for further processing.

Irvin Dingle
Petitions Examiner
Office of Petitions

UNITED STATES PATENT AND TRADEMARK OFFICE

Commissioner for Patents
United States Patent and Trademark Office
P.O. Box 1450
Alexandria, VA 22313-1450
www.uspto.gov

FRISHAUF HOLTZ GOODMAN & CHICK, PC
220 FIFTH AVENUE, 16TH FLOOR
NEW YORK, NY 10001-7708

COPY MAILED

MAR 2 1 2006

OFFICE OF PETITIONS

In re Application of	:	
Steven Asman et al	:	
Application No. 29/179,871	:	ON PETITION
Filed: April 16, 2003	:	
Attorney Docket No. 02620DES/RPM	:	

This is a decision on the petition under 37 CFR 1.137(b), filed January 20, 2006, to revive the above-identified application.

The petition is **GRANTED**.

The above-identified application became abandoned for failure to submit formal drawings in a timely manner in reply to the Notice of Allowability mailed June 9, 2005, which set a shortened statutory period for reply of three (3) months. Accordingly, the above-identified application became abandoned on September 10, 2005.

The terminal disclaimed filed January 30, 2006 under 37 CFR 1.137(d) has been entered and made of record. Effective September 8, 2000, 37 CFR 1.137(d)(1) has been added to state that a terminal disclaimer filed pursuant to this rule must dedicate to the public a terminal part of the term of any patent granted thereon equivalent to the lesser of: 1) the period of abandonment of the application; or 2) the period extending beyond twenty years from the date on which the application for the patent was filed in the United States, or, if the application contains a specific reference to an earlier filed application(s) under 35 U.S.C. 120, 121 or 365(c), from the date on which the earliest such application was filed. 65 Fed. Reg. 54,674 (2000). Accordingly, the period of the terminal disclaimer filed November 14, 2005 will be equivalent to the lesser of period (1) or (2), as noted above, for this application.

Telephone inquiries concerning this decision should be directed to Wan Laymon at (571) 272-3220.

This matter is being referred to Publishing Division.

Wan Laymon
Petitions Examiner
Office of Petitions

SPE RESPONSE FOR CERTIFICATE OF CORRECTION

Paper No.: _____

DATE : November 4, 2004

TO SPE OF : ART UNIT ~~2912~~ 2915 29/179,926

SUBJECT : Request for Certificate of Correction on Patent No.: **D489,778**

A response is requested with respect to the accompanying request for a certificate of correction.

Please complete this form and return with file, within **7** days to:
Certificates of Correction Branch - PK 3-915
Palm location **7580** - Tel. No. 305-8309

With respect to the change(s) requested, correcting Office and/or Applicant's errors, should the patent read as shown in the certificate of correction? No new matter should be introduced, nor should the scope or meaning of the claims be changed.

Magdalene Talley

Thank You For Your Assistance **Certificates of Correction Branch**

The request for issuing the above-identified correction(s) is hereby:
Note your decision on the appropriate box.

- ☑ **Approved** — All changes apply.
- ☐ **Approved in Part** — Specify below which changes **do not** apply.
- ☐ **Denied** — State the reasons for denial below.

Comments: Gary D. Watson Art Unit 2915

GARY D. WATSON
SUPERVISORY PATENT EXAMINER

This was not received by me until Today (8/7/07)

PTO/SB/44 (07-03)
Approved for use through 01/31/2004. OMB 0651-0033
U.S. Patent and Trademark Office; U.S. DEPARTMENT OF COMMERCE
Under the Paperwork Reduction Act of 1995, no persons are required to respond to a collection of information unless it displays a valid OMB control number.
(Also Form PTO-1050)

UNITED STATES PATENT AND TRADEMARK OFFICE
CERTIFICATE OF CORRECTION

PATENT NO. : D489,778

DATED : May 11, 2004

INVENTOR(S) : Wen-Ta Fan; Christopher M. Hancock; and Mark G. Hecox

It is certified that error appears in the above-identified patent and that said Letters Patent is hereby corrected as shown below:

Figure 1 in the patent should be replaced with the Figure 1 as attached.

MAILING ADDRESS OF SENDER:

PATENT NO. D489,778

Sterne, Kessler, Goldstein & Fox P.L.L.C.
1100 New York Avenue, N.W.
Washington, DC 20005-3934

No. of additional copies

This collection of information is required by 37 CFR 1.322, 1.323, and 1.324. The information is required to obtain or retain a benefit by the public which is to file (and by the USPTO to process) an application. Confidentiality is governed by 35 U.S.C. 122 and 37 CFR 1.14. This collection is estimated to take 1.0 hour to complete, including gathering, preparing, and submitting the completed application form to the USPTO. Time will vary depending upon the individual case. Any comments on the amount of time you require to complete this form and/or suggestions for reducing this burden, should be sent to the Chief Information Officer, U.S. Patent and Trademark Office, U.S. Department of Commerce, P.O. Box 1450, Alexandria, VA 22313-1450. DO NOT SEND FEES OR COMPLETED FORMS TO THIS ADDRESS. SEND TO: Attention Certificate of Corrections Branch, Commissioner for Patents, P.O. Box 1450, Alexandria, VA 22313-1450.

If you need assistance in completing the form, call 1-800-PTO-9199 and select option 2.

25 MAY 2004

OIPE JC174
MAY 1 8 2004
PATENT & TRADEMARK OFFICE

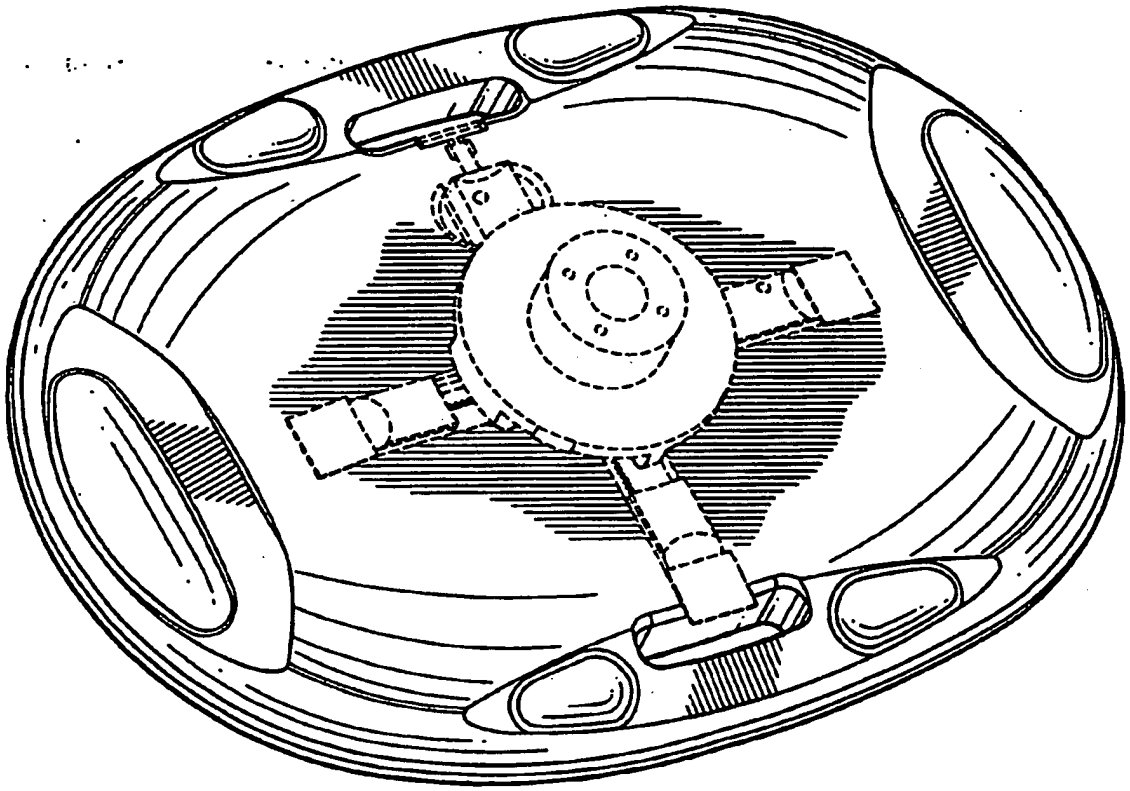

FIG. 1

UNITED STATES PATENT AND TRADEMARK OFFICE

Commissioner for Patents
United States Patent and Trademark Office
P.O. Box 1450
Alexandria, VA 22313-1450
www.uspto.gov

WORKMAN NYDEGGER
(F/K/A WORKMAN NYDEGGER & SEELEY)
60 EAST SOUTH TEMPLE
1000 EAGLE GATE TOWER
SALT LAKE CITY, UT 84111

COPY MAILED

FEB 16 2006

OFFICE OF PETITIONS

In re Application of	:	
S. Curtis Nye et al	:	
Application No. 29/179,965	:	DECISION GRANTING PETITION
Filed: April 16, 2003	:	UNDER 37 CFR 1.137(b)
Attorney Docket No. 15499.478	:	

This is a decision on the petition under 37 CFR 1.137(b), filed September 13, 2004, to revive the above-identified application.

The petition is **GRANTED**.

This application became abandoned for failure to timely pay the issue fee on or before March 16, 2004 as required by the Notice of Allowance and Fee(s) Due, mailed December 16, 2003.

The petition satisfies the conditions for revival pursuant to the provisions of 37 CFR 1.137(b) in that (1) the reply in the form of payment of the $480 issue fee; (2) the $1,330 petition fee; (3) the required statement of unintentional delay; and (4) a terminal disclaimer and fee as required by 37 CFR 1.137(d) have been received. Accordingly, the issue fee is accepted as having been unintentionally delayed.

The terminal disclaimer is accepted and has been made of record.

Telephone inquiries concerning this decision should be directed to the undersigned at (571) 272-3218.

This matter is being referred to Publishing Division.

Frances Hicks
Petitions Examiner
Office of Petitions

C:\Documents and Settings\FHicks\My Documents\470\Feb9\179965.wpd

UNITED STATES PATENT AND TRADEMARK OFFICE

SEP 10 2004

COMMISSIONER FOR PATENTS
UNITED STATES PATENT AND TRADEMARK OFFICE
P.O. BOX 1450
ALEXANDRIA, VA 22313-1450
www.uspto.gov

A BURGESS LOWE
101 EAST MAPLE STREET
NORTH CANTON, OH 44720

In re Application of
William G. Alford
Serial No.: 29/179,996
Filed: April 17, 2003
Attorney Docket No.: 2655

: PETITION DECISION

This is a decision on applicant's Petition under 37 CFR 1.137(b) submitted July 29 2004, to revive an unintentionally abandoned application. Applicant is advised that his petition was labeled with the incorrect serial number (29/189996).

This application became abandoned for failure to respond to the Notice of Allowance mailed December 3, 2003, which set a three-month statutory period to pay the Issue fee. As no response was submitted by March 3, 2004, the application was abandoned. Applicant then filed this petition.

A grantable petition under 37 CFR 1.137(b), as revised December 1, 1997, requires four items: (1) a petition and petition fee; (2) a complete response if not earlier made; (3) a statement that the entire period of delay in prosecution was unintentional; and (4) a terminal disclaimer and disclaimer fee. The requirement for a terminal disclaimer has been waived, as the petition was submitted before the mailing of the Notice of Abandonment.

Applicant's petition is **GRANTED.**

The Terminal Disclaimer fee of $110.00 will **not** be charged to applicant's Deposit Account.

The application will be forwarded to Publications Branch to be issued into a Patent in due course.

Should there be any questions with respect to this decision, please contact Sandra Morris; by mail addressed to: Director, Technology Center 3700/2900, P.O. Box 1450, Alexandria, VA 22313-1450; or by telephone at (571) 272-2622.

John Kittle
Director, Technology Center 3700/2900

UNITED STATES PATENT AND TRADEMARK OFFICE

SEP 10 2005

COMMISSIONER FOR PATENTS
UNITED STATES PATENT AND TRADEMARK OFFICE
P.O. BOX 1450
ALEXANDRIA, VA 22313-1450
www.uspto.gov

A BURGESS LOWE
101 EAST MAPLE STREET
NORTH CANTON, OH 44720

In re Application of	
William G. Alford	:
Serial No.: 29/179,997	:
Filed: April 17, 2003	: PETITION DECISION
Attorney Docket No.: 2656	:
	:

This is a decision on applicant's Petition under 37 CFR 1.137(b) submitted July 29 2004, to revive an unintentionally abandoned application. Applicant is advised that his petition was labeled with the incorrect serial number (29/189997).

This application became abandoned for failure to respond to the Notice of Allowance mailed December 3, 2003, which set a three-month statutory period to pay the Issue fee. As no response was submitted by March 3, 2004, the application was abandoned. Applicant then filed this petition.

A grantable petition under 37 CFR 1.137(b), as revised December 1, 1997, requires four items: (1) a petition and petition fee; (2) a complete response if not earlier made; (3) a statement that the entire period of delay in prosecution was unintentional; and (4) a terminal disclaimer and disclaimer fee. The requirement for a terminal disclaimer has been waived, as the petition was submitted before the mailing of the Notice of Abandonment.

Applicant's petition is **GRANTED.**

The Terminal Disclaimer fee of $110.00 will be refunded to applicant's Deposit Account 05-1120, as directed.

The application will be forwarded to Publications Branch to be issued into a Patent in due course.

Should there be any questions with respect to this decision, please contact Sandra Morris; by mail addressed to: Director, Technology Center 3700/2900, P.O. Box 1450, Alexandria, VA 22313-1450; or by telephone at (571) 272-2622.

John Kittle
Director, Technology Center 3700/2900

UNITED STATES PATENT AND TRADEMARK OFFICE

UNITED STATES DEPARTMENT OF COMMERCE
United States Patent and Trademark Office
Address: COMMISSIONER FOR PATENTS
P.O. Box 1450
Alexandria, Virginia 22313-1450
www.uspto.gov

APPLICATION NO.	FILING DATE	FIRST NAMED INVENTOR	ATTORNEY DOCKET NO.	CONFIRMATION NO
29/180,098	04/21/2003	Si Ying Sung	717.372	1052

4617 7590 05/12/2005

LEVISOHN, BERGER & LANGSAM, LLP
805 THIRD AVENUE, 19TH FLOOR
NEW YORK, NY 10022

EXAMINER
SEIFERT, RALF T

ART UNIT	PAPER NUMBER
2914	

DATE MAILED: 05/12/2005

Please find below and/or attached an Office communication concerning this application or proceeding.

UNITED STATES PATENT AND TRADEMARK OFFICE

COMMISSIONER FOR PATENTS
UNITED STATES PATENT AND TRADEMARK OFFICE
P.O. BOX 1450
ALEXANDRIA, VA 22313-1450
www.uspto.gov

JAN 12 2005

PETER L. BERGER, ESQ.
LEVISOHN, LERNER, BERGER & LANGSAM, LLP
SUITE 2500
757 THIRD AVENUE
NEW YORK, NY 10017

In re Application of
Si Ying Sung et al.
Serial No.: 29/180,098
Filed: April 21, 2003
Attorney Docket No.: 717.372

: PETITION DECISION

This is a decision on the renewed petition under 37 CFR 1.137(b), filed March 8, 2004, to revive an unintentionally abandoned application. The delay in acting upon this petition is regretted; applicant's assistance was appreciated.

This application became abandoned for failure to timely respond to the Notice of Allowance mailed August 14, 2003, which required the Issue fee and formal drawings. As no response was received by November 14, 2003, the application was abandoned. Applicant filed a Petition on November 24, 2003 which was dismissed; this petition followed.

Applicant's petition now meets the requirements of a grantable petition under 37 CFR 1.137(b).

Applicant's Petition is **GRANTED**.

This application will be forwarded to Issue Branch for publication as a Patent in due course.

Should there be any questions with respect to this decision, please contact Sandra Morris; by mail addressed to: Director, Technology Center 3700/2900, P.O. Box 1450, Alexandria, VA 22313-1450; or by telephone at (571) 272-2622.

John Kittle
Director, Technology Center 3700/2900

RECEIVED
FEB 25 2005
TC 1700

RECEIVED
JAN 25 2005
TECHNOLOGY CENTER 3700

UNITED STATES PATENT AND TRADEMARK OFFICE

JUL 09 2004

Commissioner for Patents
United States Patent and Trademark Office
P.O. Box 1450
Alexandria, VA 22313-1450
www.uspto.go

HORST M KASPER
13 FOREST DRIVE
WARREN, NJ 07059

In re Application of	:
Christine Bourget	:
Serial No.: 29/180,169	: PETITION DECISION
Filed: April 18, 2003	:
Attorney Docket No.: SM1223	:

This is in response to applicants' Letter Regarding Notice of Abandonment submitted May 25, 2004, which is being treated as a Petition under 37 CFR 1.181, based on not having received the Office action.

This petition is **GRANTED.**

This application was held abandoned based on applicant's failure to timely respond to the Notice of Allowance mailed December 31, 2003, which set a three month statutory period of time to respond. As no response was received by March 30, 2004, a Notice of Abandonment was mailed May 7, 2004. This petition followed.

Applicant has stated that the Notice of Allowance was never received, and a copy of the docket records confirms this. The case is now returned to pending status, and the abandonment is thereby withdrawn.

The application will be promptly forwarded to the Examiner for prompt remailing of the Notice of Allowance and Issue Fee Due.

Should there be any questions with respect to this decision, please contact Sandra Morris; by mail addressed to: Director, Technology Center 3700/2900, P.O. Box 1450, Alexandria, VA 22313-1450; or by telephone at (571) 272-2622.

John Kittle
Director, Technology Center 3700/2900

UNITED STATES
PATENT AND
TRADEMARK OFFICE

JUL 7 2003

UNDER SECRETARY OF COMMERCE FOR INTELLECTUAL PROPERTY AND
DIRECTOR OF THE UNITED STATES PATENT AND TRADEMARK OFFICE
WASHINGTON, D.C. 20231
WWW.USPTO.GOV

#3

John D. Gugliotta, P.E., Esq.
202 Delaware Building
137 South Main Street
Akron, OH 44308

In re Application of	:	
Dr. Stephen Tsengas, Ph.D.	:	DECISION ON PETITION
Serial No.: 29/180,189	:	
Filed: April 21, 2003	:	
For: Adjustable Height Pet Feeder	:	

This is in response to applicants' petition filed April 21, 2003, to make the above-identified application special under the provisions of 37 CFR 1.102(c), based on the age of the applicant.

Applicant has satisfied the provisions set forth in M.P.E.P. 708.02, IV. Therefore the petition is **GRANTED**.

The application will be forwarded to the examiner for action on the merits commensurate with this decision.

Should there be any questions with regard to this letter please contact John Kittle by letter addressed to the Director, Technology Center 3700/2900, Washington, DC 20231, or by telephone at (703) 308-0873 or by facsimile transmission at (703) 308-3139.

John E. Kittle
Director,
Technology Center 3700/2900

UNITED STATES PATENT AND TRADEMARK OFFICE

COMMISSIONER FOR PATENTS
UNITED STATES PATENT AND TRADEMARK OFFICE
P.O. BOX 1450
ALEXANDRIA, VA 22313-1450
www.uspto.gov

THE HALVORSON LAW FIRM
STE 1
405 W. SOUTHERN AVE.
TEMPE, AZ 85282

APR 18 2005

In re Application of
Michael L. Waldman
Serial No.: 29/180,294
Filed: April 18, 2003
Attorney Docket No.: 347-003

: PETITION DECISION

This is a decision on applicant's petition to revive patent application under 37 CFR 1.137(b), filed February 17, 2005, to revive an unintentionally abandoned application.

This application became abandoned for failure to timely respond to the Notice of Allowance mailed April 27, 2004 which set a three month statutory period of time to submit the Issue fee and formal drawings. The Issue fee was submitted June 16, 2004; however, as no formal drawings were received by July 27, 2004, a Notice of Abandonment was mailed September 1, 2004; this petition followed.

A grantable petition under 37 CFR 1.137(b), as revised December 1, 1997, requires four items: (1) a petition and petition fee; (2) a complete response if not earlier made; (3) a statement that the entire period of delay in prosecution was unintentional; and (4) a terminal disclaimer and disclaimer fee. Applicant's petition lacks a complete response (2), as applicant did not make the required corrections to the formal drawings. Applicant was required to show the pockets on the rear of the design in Figure 3, as shown on the front of the design. Figure 3 must be corrected before the application can proceed to issue.

Any renewed petition in order to be considered timely must be filed within TWO MONTHS of the date of mailing of this decision.

Applicant's petition is **DISMISSED.**

Should there be any questions with respect to this decision, please contact Sandra Morris; by mail addressed to: Director, Technology Center 1700/2900, P.O. Box 1450, Alexandria, VA 22313-1450; or by telephone at (571) 272-2622.

Jacqueline Stone
Director, Technology Center 1700/2900

UNITED STATES PATENT AND TRADEMARK OFFICE

Commissioner for Patents
United States Patent and Trademark Office
P.O. Box 1450
Alexandria, VA 22313-1450
www.uspto.gov

KRISTOFER E. HALVORSON
THE HALVORSON LAW FIRM, P.C.
1757 E. BASELINE RD., STE 130
GILBERT, AZ 85233

COPY MAILED

FEB 14 2006

OFFICE OF PETITIONS

In re Application of	:	ON PETITION
Michael L. Waldman	:	
Application No. 29/180,294	:	
Filed: April 18, 2003	:	
Attorney Docket No. 347-003	:	

This is a decision on the renewed petition under 37 CFR 1.137(b), filed June 15, 2005, to revive the above-identified application.

The petition is **GRANTED.**

The above-identified application became abandoned for failure to submit formal drawings in a timely manner in reply to the Notice of Allowability mailed April 27, 2004, which set a statutory period for reply of three (3) months. Accordingly, the above-identified application became abandoned on July 28, 2004.

The Change of Correspondence Address submitted on May 4, 2005, has been accepted and recorded.

The petition satisfies the requirements of 37 CFR 1.137(b) in that petitioner has supplied (1) the reply in the form of Formal Drawings; (2) the petition fee of $750; (3) the required statement of unintentional delay have been received; and (4) a terminal disclaimer and disclaimer fee.

Telephone inquiries concerning this decision should be directed to the undersigned at (571) 272-3229.

This application matter is being referred to the Publishing Division for further processing.

Retta Williams

Retta Williams
Petitions Examiner
Office of Petitions

UNITED STATES PATENT AND TRADEMARK OFFICE

COMMISSIONER FOR PATENTS
UNITED STATES PATENT AND TRADEMARK OFFICE
P.O. BOX 1450
ALEXANDRIA, VA 22313-1450
www.uspto.gov

Paper No. 6

POTTHAST & ASSOCIATES
2712 N ASHLAND AVENUE
CHICAGO IL 60614-1106

COPY MAILED

DEC 24 2003

OFFICE OF PETITIONS

In re Design Application of
Lassota et al.
Application No. 29/180,317
Filed: April 22, 2002
Attorney Docket No. FET-51

: DECISION GRANTING PETITION
: UNDER 37 CFR 1.182

This is a decision on the petition filed July 2, 2003 under 37 CFR 1.182 requesting that the above-identified design application be accepted as complete and accorded a filing date of April 22, 2003.

The petition is **granted**.

The instant design application papers were filed on April 22, 2003. However, on June 20, 2003, the Office of Initial Patent Examination sent a Notice (of Omitted Items) stating that no filing date had ben granted as these papers as filed appeared to lack the drawings required by 35 U.S.C. 113 and referred to in the specification, and additionally noted that the oath or declaration present on filing was not signed.

In reply, a copy of 3 sheets of drawings containing drawing figures 1 through 7, a copy of an itemized postcard receipt for the above-identified provisional application papers bearing a USPTO date stamp of April 22, 2003, indicating the USPTO had received 3 sheets of drawing figures, and the instant petition were filed on July 2, 2003. Further, on July 29, 2003 applicants filed a signed oath or declaration and the late completion surcharge. Petitioners assert, as shown by the postcard receipt, that the purportedly missing 3 sheets of drawing figures were in fact received by the USPTO.

Per MPEP 503, as an adequately itemized postcard receipt will serve as *prima facie* evidence of receipt of all items listed thereon, the petition is **granted.** The Notice of June 20, 2003, was mailed in error where it stated that no drawings had been received and is **vacated** to that extent. The error is regretted.

As no fee is owed due to the USPTO error, the $130 petition fee paid has been credited to deposit account No. 16-2370.

The application file is being returned to the Office of Initial Patent Examination, Customer Corrections, for further processing <u>with a filing date of April 22, 2003, and USPTO records will be corrected to show that 3 sheets of drawings containing Figures 1 through 7 were present on filing</u>, using the 3 sheets of drawings filed July 2, 2003.

Telephone inquiries concerning this decision may be directed to the undersigned at (703) 305-1820. Telephone inquiries related to OIPE processing should be directed to the OIPE hotline at (703) 308-1202.

Brian Hearn

Brian Hearn
Petitions Examiner
Office of Petitions
Office of the Deputy Commissioner
for Patent Examination Policy

UNITED STATES PATENT AND TRADEMARK OFFICE

NOV 22 2004

Commissioner for Patents
United States Patent and Trademark Office
P.O. Box 1450
Alexandria, VA 22313-1450
www.uspto.gov

#6

IRVING KESCHNER
SUITE 1150
21515 HAWTHORNE BOULEVARD
TORRANCE CA 90503

In re Application of	:
Neil J. Kay	:
Serial No.: 29/180,407	: PETITION DECISION
Filed: April 23, 2003	:
Attorney Docket No.:	:

This is a decision on the Petition to Revive under 37 CFR 1.137(b), filed August 13, 2004, to revive an unintentionally abandoned application.

The petition is **DISMISSED**.

This application became abandoned for failure to respond to the Notice of Allowance mailed September 2, 2003, which set a three month statutory period of time to respond. As no response was received by December 2, 2003, a Notice of Abandonment was mailed February 9, 2004. This petition followed.

A grantable petition under 37 CFR 1.137(b), as revised December 1, 1997, requires four items: (1) a petition and petition fee; (2) a complete response if not earlier made; (3) a statement that the entire period of delay in prosecution was unintentional; and (4) a terminal disclaimer and disclaimer fee. This petition lacks item (4), as a terminal disclaimer and fee must be included with design application petitions. 37 CFR 1.137(c).

Applicant may also wish to submit new formal drawings with this renewed petition, as the facsimile copies in the application will not be of optimal quality in the printed patent.

Any renewed petition in order to be considered timely must be filed within TWO MONTHS of the date of mailing of this decision.

Should there be any questions with respect to this decision, please contact Sandra Morris; by mail addressed to: Director, Technology Center 3700/2900, P.O. Box 1450, Alexandria, VA 22313-1450; or by telephone at (571) 272-2622.

John Kittle
Director, Technology Center 3700/2900

UNITED STATES PATENT AND TRADEMARK OFFICE

COMMISSIONER FOR PATENTS
UNITED STATES PATENT AND TRADEMARK OFFICE
P.O. BOX 1450
ALEXANDRIA, VA 22313-1450
www.uspto.gov

APR 6 2005

IRVING KESCHNER
SUITE 1150
21515 HAWTHORNE BOULEVARD
TORRANCE CA 90503

In re Application of
Neil J. Kay
Serial No.: 29/180,407
Filed: April 23, 2003
Attorney Docket No.:

: PETITION DECISION

This is a decision on the renewed Petition to Revive under 37 CFR 1.137(b), received December 16, 2004, to revive an unintentionally abandoned application.

A grantable petition under 37 CFR 1.137(b), as revised December 1, 1997, requires four items: (1) a petition and petition fee; (2) a complete response if not earlier made; (3) a statement that the entire period of delay in prosecution was unintentional; and (4) a terminal disclaimer and disclaimer fee. The terminal disclaimer submitted is acceptable.

Applicant's petition is **GRANTED.**

The application will be forwarded to Issue Branch to be processed as a patent in due course.

Should there be any questions with respect to this decision, please contact Sandra Morris; by mail addressed to: Director, Technology Center 3700/2900, P.O. Box 1450, Alexandria, VA 22313-1450; or by telephone at (571) 272-2622.

John Kittle
Director, Technology Center 3700/2900

JMStone

JACQUELINE M. STONE
DIRECTOR
TECHNOLOGY CENTER 1700

UNITED STATES PATENT AND TRADEMARK OFFICE

Commissioner for Patents
United States Patent and Trademark Office
P.O. Box 1450
Alexandria, VA 22313-1450
www.uspto.gov

GREER, BURNS & CRAIN
300 S WACKER DR
25TH FLOOR
CHICAGO, IL 60606

COPY MAILED

OCT 18 2004

OFFICE OF PETITIONS

In re Application of	:
John Cobb	:
Application No. 29/180,554	: DECISION REFUSING STATUS
Filed: April 25, 2003	: UNDER 37 CFR 1.47(b)
Attorney Docket No. 2322.67534	:
For: **AERODYNAMIC BICYCLE FORK**	

This is a decision on the petition under 37 CFR 1.47(b), filed October 23, 2003.

The petition under 37 CFR 1.47(b) is **dismissed.**

Any request for reconsideration under this decision must be submitted within TWO (2) MONTHS from the mail date of this decision. Extensions of time under 37 CFR 1.136(a) are permitted. Failure to respond will result in the abandonment of this application. Any response should be titled "Request for Reconsideration of Petition Under 37 CFR 1.47(b).

The above-identified application was filed on April 25, 2003, without an executed oath or declaration or filing fee. Accordingly, a "Notice to File Missing Parts Nonprovisional Application" (the "Notice") was mailed on June 23, 2003, requiring an executed oath or declaration and a surcharge for the late filing of the oath or declaration, payment of the filing fee, and substitute drawings. The instant petition was filed on October 23, 2003, responsively, with a request for an extension of time within the second month.

A grantable petition under 37 CFR 1.47(b) requires:

(1) proof that the non-signing inventor(s) cannot be reached or refuses to sign the oath or declaration after having been presented with the application papers (specification, claims, and drawings);

(2) an acceptable oath or declaration in compliance with 35 U.S.C. §§ 115 and 116;

(3) the petition fee,

(4) a statement of the last known address of the non-signing inventor,

(5) proof of proprietary interest, and

(6) a showing (statement) that such action is necessary to preserve the rights of the parties or to prevent irreparable damage.

The instant petition lacks items (2), (5), and (6) as set forth above.

As to item (2), petitioner failed to file a proper oath or declaration with the instant petition as required by 37 CFR 1.47. Section 409.03 (b) of the MPEP states, in pertinent part, that:

> [t]he 37 CFR 1.47(b) applicant must make the oath required by 37 CFR 1.63 and 1.54 or 1.175. Where a corporation is the 37 CFR 1.47(b) applicant, an officer (President, Vice-President, Secretary, Treasurer, or Chief Executive Officer) thereof should normally sign the necessary oath or declaration. A corporation may authorize any person including an attorney or agent authorized to practice before the U.S. Patent and Trademark Office, to sign the application oath or declaration on its behalf. Where an oath or declaration is signed by a registered attorney or agent on behalf of a corporation, either proof of the attorney's or agent's authority in the form of a statement signed by an appropriate corporate officer must be submitted, or the attorney or agent my simply state that he or she is authorized to sign on behalf of the corporation.

A review of the application file did not reveal an oath or declaration for the subject application that was executed by the 37 CFR 1.47(b) applicant or by his representative. With any renewed petition filed, petitioner must file a declaration that conforms to the MPEP section cited above.

As to item (5), petitioner has not satisfactorily demonstrated that the 37 CFR 1.47(b) applicant has sufficient proprietary interest to proceed with the application on behalf of inventor Cobb. The *Manual of Patent Examining Procedure*, Section 409.03(f) provides, in pertinent part, that:

> [i]f the application has been assigned, a copy of the assignment (in the English language) must be submitted. The assignment must clearly indicate that the invention described in the 37 CFR 1.47(b) application was assigned to the 37 CFR 1.47(b) applicant. A statement under 37 CFR 3.73(B0 by the assignee must also be submitted (see MPEP 324).

Although an executed assignment was found with the petition papers, a certificate pursuant to 37 CFR 3.73(b) was not found. Petitioner must file a certificate under 37 CFR 3.73(b) pursuant to the section of the MPEP cited above.

As to item (6) above, proof of irreparable damage was not found with the petition papers.

Section 409.03(g) of the MPEP provides that, "[i]rreparable damage may be established by a showing (a statement) that a filing date is necessary to preserve the rights of the party or to prevent irreparable damage." A statement to this effect must accompany any renewed petition filed.

Further correspondence with respect to this matter should be addressed as follows:

By mail: Mail Stop Petitions
Commissioner for Patents
P.O. Box 1450
Alexandria, VA 22313-1450

By FAX: (571) 273-0025
Attn: Office of Petitions

Telephone inquiries should be directed to the undersigned at (571) 272-3222.

Kenya A. McLaughlin

Kenya A. McLaughlin
Petitions Attorney
Office of Petitions

UNITED STATES PATENT AND TRADEMARK OFFICE

Commissioner for Patents
United States Patent and Trademark Office
P.O. Box 1450
Alexandria, VA 22313-1450
www.uspto.gov

GREER, BURNS & CRAIN
300 S WACKER DR
25TH FLOOR
CHICAGO, IL 60606

COPY MAILED

FEB 11 2005

OFFICE OF PETITIONS

In re Application of
John Cobb
Application No.: 29/180,554
Filed: April 25, 2003
Attorney Docket No: 2322.67534
For: AERODYNAMIC BICYCLE FORK

DECISION ACCORDING STATUS UNDER RULE 47(b)

This is in response to the renewed petition under 37 CFR 1.47(b), filed December 13, 2004.

The petition is **GRANTED**.

The above-identified application and papers have been reviewed and found in compliance with 37 CFR 1.47(b). This application is hereby accorded Rule 1.47(b) status.

The above-identified application was filed on April 25, 2003, without an executed oath or declaration or filing fee. Accordingly, a "Notice to File Missing Parts Nonprovisional Application" (the "Notice") was mailed on June 23, 2003, requiring an executed oath or declaration and a surcharge for the late filing of the oath or declaration, payment of the filing fee, and substitute drawings. A petition under 37 CFR 1.47(b) was filed on October 23, 2003, responsively, with a request for an extension of time within the second month. Tthe petition was dismissed by a decision mailed October 18, 2004.

By the instant petition and evidentiary documents, petitioner has established that the 37 CFR 1.47(b) applicant has sufficient proprietary interest to proceed with prosecution of the application without the sole inventor.

As provided in Rule 1.47(c), this Office will forward notice of this application's filing to the non-signing inventors at the addresses given in the petition. Notice of the filing of this application will also be published in the Official Gazette.

This application will be forwarded to the Office of Initial Patent Examination for further processing.

Telephone inquiries should be directed to the undersigned at (571) 272-3222.

Kenya A. McLaughlin
Petitions Attorney
Office of Petitions

UNITED STATES PATENT AND TRADEMARK OFFICE

COMMISSIONER FOR PATENTS
UNITED STATES PATENT AND TRADEMARK OFFICE
P.O. BOX 1450
ALEXANDRIA, VA 22313-1450
www.uspto.gov

MAR 29 2005

STEPHEN C. BEUERLE
PROCOPIO, CORY, HARGREAVES & SAVITCH LLP
530 B STREET, SUITE 2100
SAN DIEGO, CA 92101-4469

In re Application of
Dino Berardino
Serial No.: 29/180,622
Filed: April 25, 2003
Attorney Docket No.: 111760-02

: PETITION DECISION

This is a decision on applicant's Petition under 37 CFR 1.137(b) filed December 14, 2004, to revive an unintentionally abandoned application.

This application became abandoned for failure to respond to the Notice of Allowance mailed March 1, 2004, which set a three-month statutory period to pay the Issue fee and submit formal drawings. As no response was received by June 1, 2004, a Notice of Abandonment was mailed August 13, 2004. This petition followed.

A grantable petition under 37 CFR 1.137(b), as revised December 1, 1997, requires four items: (1) a petition and petition fee; (2) a complete response if not earlier made; (3) a statement that the entire period of delay in prosecution was unintentional; and (4) a terminal disclaimer and disclaimer fee. A proper terminal disclaimer was submitted by facsimile January 5, 2005.

Applicant's petition is **GRANTED.**

The $55.00 Terminal Disclaimer fee will be charged to applicant's Deposit Account 50-2075, as directed.

The application will be forwarded to Publications Branch to be issued into a Patent in due course.

Should there be any questions with respect to this decision, please contact Sandra Morris; by mail addressed to: Director, Technology Center 1700/2900, P.O. Box 1450, Alexandria, VA 22313-1450; or by telephone at (571) 272-2622.

JMStone

Jacqueline Stone
Director, Technology Center 1700/2900

UNITED STATES PATENT AND TRADEMARK OFFICE

#7

COMMISSIONER FOR PATENTS
UNITED STATES PATENT AND TRADEMARK OFFICE
P.O. BOX 1450
ALEXANDRIA, VA 22313-1450
www.uspto.gov

STEPHEN R GREINER, ESQUIRE
GREINER LAW OFFICES, P.C.
SUITE 110
6701 DEMOCRACY BLVD.
BETHESDA, MD 20817

APR 6 2005

In re Application of
Samuel H. Alverson Jr.
Serial No.: 29/180,681
Filed: April 30, 2003
Attorney Docket No.: 3715.01

: PETITION DECISION

This is a decision on applicant's petition to revive patent application under 37 CFR 1.137(b), filed January 20, 2005, to revive an unintentionally abandoned application.

This application became abandoned for failure to timely respond to the Notice of Allowance mailed November 4, 2003, which set a three month statutory period of time to submit the Issue fee. As no response was received by were received by February 4, 2004, a Notice of Abandonment was mailed August 6, 2004; this petition followed.

A grantable petition under 37 CFR 1.137(b), as revised December 1, 1997, requires four items: (1) a petition and petition fee; (2) a complete response if not earlier made; (3) a statement that the entire period of delay in prosecution was unintentional; and (4) a terminal disclaimer and disclaimer fee. Applicant's petition lacks the terminal disclaimer and fee (4), which must be filed with petitions for design applications.

Any renewed petition in order to be considered timely must be filed within TWO MONTHS of the date of mailing of this decision.

Applicant's petition is **DISMISSED.**

Should there be any questions with respect to this decision, please contact Sandra Morris; by mail addressed to: Director, Technology Center 1700/2900, P.O. Box 1450, Alexandria, VA 22313-1450; or by telephone at (571) 272-2622.

JMstone
Jacqueline Stone
Director, Technology Center 1700/2900

UNITED STATES PATENT AND TRADEMARK OFFICE

Commissioner for Patents
United States Patent and Trademark Office
P.O. Box 1450
Alexandria, VA 22313-1450
www.uspto.gov

Stephen R. Greiner, Esquire
GREINER LAW OFFICES, P.C.
Suite 110
6701 Democracy Blvd.
Bethesda, MD 20817

COPY MAILED

JUL 3 1 2006

OFFICE OF PETITIONS

In re Application of	:
Alverson	: DECISION GRANTING PETITION
Application No. 29/180,681	: UNDER 37 CFR 1.137(b)
Filed: April 30, 2003	:
Atty. Dkt. No.: 3715.01	:

This decision is in response to the petition under 37 CFR 1.137(b), filed March 3, 2006.

The petition is **GRANTED**.

The above-identified application became abandoned February 5, 2004, for failure to timely submit a proper reply to the Notice of Allowance (Notice) mailed November 4, 2003. The Notice set a three month statutory period of time for reply. Notice of Abandonment was mailed August 6, 2004.

A grantable petition under 37 CFR 1.137(b) requires submission of: (1) the reply required to the outstanding Office action or notice, unless previously filed; (2) the petition fee as set forth in § 1.17(m); (3) a statement that the entire delay in filing the required reply from the due date for the reply until the filing of a grantable petition pursuant to this paragraph was unintentional. The Director may require additional information where there is a question whether the delay was unintentional; and (4) any terminal disclaimer (and fee as set forth in § 1.20(d)) required pursuant to 37 CFR 1.137(d).

The instant petition has been reviewed and found in compliance with the provisions of 37 CFR 1.137(b). Accordingly, the failure to timely submit a proper reply to the Notice is accepted as having been unintentionally delayed.

This application is being forwarded to the Office of Patent Publication for further processing.

Telephone inquiries regarding this decision should be directed to the undersigned at (571) 272-3205.

Alesia M. Brown
Petitions Attorney
Office of Petitions

UNITED STATES PATENT AND TRADEMARK OFFICE

Commissioner for Patents
United States Patent and Trademark Office
P.O. Box 1450
Alexandria, VA 22313-1450
www.uspto.gov

TROXELL LAW OFFICE PLLC
5205 LEESBURG PIKE, SUITE 1404
FALLS CHURCH, VA 22041

6/24/05

In re Application of
Jerry Moon
Serial No.: 29/180,764
Filed: May 1, 2003
Attorney Docket No.: BHT/3105-29

: PETITION DECISION

This is a decision on applicant's Petition under 37 CFR 1.137(b) received March 14, 2005, to revive an unintentionally abandoned application.

A review of the application shows that a Notice of Allowance was mailed January 30, 2004, setting a three month period of time to pay the Issue fee. As no response was received by April 30, 2004, a Notice of Abandonment was mailed May 27, 2004. This petition followed.

A grantable petition under 37 CFR 1.137(b), as revised December 1, 1997, requires four items: (1) a petition and petition fee; (2) a complete response if not earlier made; (3) a statement that the entire period of delay in prosecution was unintentional; and (4) a terminal disclaimer and disclaimer fee. A proper terminal disclaimer was submitted by facsimile on June 9, 2005.

Applicant's petition is **GRANTED.**

The application will be forwarded to Publications Branch to be issued into a patent in due course.

The Terminal disclaimer fee of $130.00 will be charged to applicant's Deposit Account 50-1874, as directed.

Should there be any questions with respect to this decision, please contact Sandra Morris; by mail addressed to: Director, Technology Center 1700/2900, P.O. Box 1450, Alexandria, VA 22313-1450; or by telephone at (571) 272-2622.

Jacqueline M. Stone

Jacqueline Stone
Director, Technology Center 1700/2900

SPE RESPONSE FOR CERTIFICATE OF CORRECTION

Paper No.: X

DATE : September 26,2007

TO SPE OF : ART UNIT 2912

SUBJECT : Request for Certificate of Correction for Appl. No.: 29/180,795 Patent No.: D499341 S

A response is requested with respect to a request for a certificate of correction.

With respect to the change(s) requested to correct Office and/or Applicant's errors, should the patent read as shown in the certificate of correction attached herewith or the COCIN document(s), in IFW images for the above-identified patented application? No new matter should be introduced, nor should the scope or meaning of the claims be changed.

If the response is for an IFW, within **7** days, please complete and forward the response, to the employee (named below) via scanning into application images, using document code **COCX**.

DO NOT SENT TO ATTORNEY

If the response is for a paper file wrapper, please complete the response and forward the response with the paper file wrapper, to the employee (named below), within **7** days, to:

Certificates of Correction Branch (CofC)
South Tower - 9A22
Palm Location 7580

LAMONTE NEWSOME
Certificates of Correction Branch
703-308-9390 ext. 112

Thank You For Your Assistance

The request for issuing the above-identified correction(s) is hereby:
Note your decision on the appropriate box.

- ☐ **Approved** — **All** changes apply.
- ☐ **Approved in Part** — Specify below which changes **do not** apply.
- ☑ **Denied** — State the reasons for denial below.

Comments: No new Oath/Declaration has been submitted for inventor to be added.

No assignment agreement has been submitted for inventor to be added.

STELLA M. REID
SUPERVISORY PATENT EXAMINER
Art Unit 2912

UNITED STATES PATENT AND TRADEMARK OFFICE

Commissioner for Patents
United States Patent and Trademark Office
P.O. Box 1450
Alexandria, VA 22313-1450
www.uspto.gov

Date Mailed : 10/10/07

Patent No. : D499341 S
Patent Issued : 12/07/04
Docket No. : **31377-3**

Re: Request for Certificate of Correction

Consideration has been given your request for the issuance of a certificate of correction for the above-identified patent under the provisions of Rule(s) 1.322.

Respecting the alleged errors in the documents filed on 08/10/07; please see attachment. **"Therefore, no correction(s) is in order here under United States Codes (U.S.C.) 254 and the Code of Federal Regulation (C.F.R.) 1322."**

In view of the foregoing, your request in this matter is hereby denied.

Lamonte M. Newsome
For Cecelia Newman, Supervisor
Decisions & Certificates
Of Correction Branch
(703) 305-8309 or (703)-308-9390 #112

PETER K HAHN
LUCE, FORWARD, HAMILTON, SCRIPPS, LLP.
600 WEST BROADWAY
SUITE 2600
SAN DIEGO CA 92101

LMN

SPE RESPONSE FOR CERTIFICATE OF CORRECTION

Paper No.: X

DATE : September 26,2007

TO SPE OF : ART UNIT 2912

SUBJECT : Request for Certificate of Correction for Appl. No.: 29/180,795 Patent No.: D499341 S

A response is requested with respect to a request for a certificate of correction.

With respect to the change(s) requested to correct Office and/or Applicant's errors, should the patent read as shown in the certificate of correction attached herewith or the COCIN document(s), in IFW images for the above-identified patented application? No new matter should be introduced, nor should the scope or meaning of the claims be changed.

If the response is for an IFW, within 7 days, please complete and forward the response, to the employee (named below) via scanning into application images, using document code **COCX**.

DO NOT SENT TO ATTORNEY

If the response is for a paper file wrapper, please complete the response and forward the response with the paper file wrapper, to the employee (named below), within 7 days, to:

Certificates of Correction Branch (CofC)
South Tower - 9A22
Palm Location 7580

LAMONTE NEWSOME
Certificates of Correction Branch
703-308-9390 ext. 112

Thank You For Your Assistance

The request for issuing the above-identified correction(s) is hereby:
Note your decision on the appropriate box.

- ☐ **Approved** — All changes apply.
- ☐ **Approved in Part** — Specify below which changes **do not** apply.
- ☑ **Denied** — State the reasons for denial below.

Comments: No new Oath/Declaration has been submitted for inventor to be added.

No assignment agreement has been submitted for inventor to be added.

STELLA M. REID
SUPERVISORY PATENT EXAMINER
ART UNIT 2912

UNITED STATES PATENT AND TRADEMARK OFFICE

COMMISSIONER FOR PATENTS
UNITED STATES PATENT AND TRADEMARK OFFICE
P.O. BOX 1450
ALEXANDRIA, VA 22313-1450
www.uspto.gov

LAWRENCE D. GRAHAM, ESQ.
BLACK LOWE & GRAHAM PLLC
816 SECOND AVENUE
SEATTLE, WA 98104

6/24/05

In re Application of
Eugenia M. Bertulis
Serial No.: 29/180,842
Filed: April 30, 2003
Attorney Docket No.: PROG-1-1027

: PETITION DECISION

This is a decision on applicant's petition to revive patent application under 37 CFR 1.137(b), received May 6, 2005, to revive an unintentionally abandoned application.

This application became abandoned for failure to respond to the Office action mailed June 15, 2004, which set a three-month shortened statutory period to respond. As no response was received by September 15, 2004, a Notice of Abandonment was mailed January 19, 2005. Applicant then filed this petition.

A grantable petition for a design application under 37 CFR 1.137(b), as revised December 1, 1997, requires four items: (1) a petition and petition fee; (2) a complete response if not earlier made; (3) a statement that the entire period of delay in prosecution was unintentional; and (4) a terminal disclaimer and disclaimer fee.

Applicant's petition is **GRANTED**.

The application will be forwarded to an Examiner for examination of applicant's response in due course.

Should there be any questions with respect to this decision, please contact Sandra Morris; by mail addressed to: Director, Technology Center 1700/2900, P.O. Box 1450, Alexandria, VA 22313-1450; or by telephone at (571) 272-2622.

Jacqueline Stone
Director, Technology Center 1700/2900

UNITED STATES PATENT AND TRADEMARK OFFICE

DEC 15 2004

Commissioner for Patents
United States Patent and Trademark Office
P.O. Box 1450
Alexandria, VA 22313-1450
www.uspto.gov

WOOD, HERRON & EVANS, LLP
2700 CAREW TOWER
441 VINE STREET
CINCINNATI, OH 45202

In re Application of	:
Jean-Louis Limousin	:
Serial No.: 29/180,883	: PETITION DECISION
Filed: May 1, 2003	:
Attorney Docket No.: LANT-C03D1-114	:

This is in response to applicant's Petition to Withdraw Holding of Abandonment under 37 CFR 1.181, filed November 3, 2004.

A review of the file history shows that a Notice of Allowance was mailed January 30, 2004, setting a three month statutory period to pay the Issue fee and submit formal drawings. The issue fee was received March 1, 2004; however, as no formal drawings were submitted by April 30, 2004, the application was abandoned. This petition followed.

Applicant has provided a copy of the response, which included a Certificate of Transmission date of the formal drawings of February 11, 2004. Therefore, as the formal drawings were timely submitted to the Office, the application was abandoned in error.

Applicant's petition is **GRANTED.**

The application will be promptly forwarded to Publications to be printed as a patent in due course.

Should there be any questions with respect to this decision, please contact Sandra Morris; by mail addressed to: Director, Technology Center 3700/2900, P.O. Box 1450, Alexandria, VA 22313-1450; or by telephone at (571) 272-2622.

John Kittle
Director, Technology Center 3700/2900

UNITED STATES PATENT AND TRADEMARK OFFICE

COMMISSIONER FOR PATENTS
UNITED STATES PATENT AND TRADEMARK OFFICE
P.O. BOX 1450
ALEXANDRIA, VA 22313-1450
www.uspto.gov

WOODCOCK WASHBURN LLP
ONE LIBERTY PLACE, 46TH FLOOR
1650 MARKET STREET
PHILADELPHIA, PA 19103

5/18/05

In re Application of	
Eric J. Gould Bear	:
Serial No.: 29/180,925	:
Filed: May 2, 2003	: PETITION DECISION
Attorney Docket No.: MSFT-1810/304037.01	:

This is a decision on applicant's petition to revive patent application under 37 CFR 1.137(b), submitted September 8, 2004, to revive an unintentionally abandoned application. The delay in acting upon this petition is regretted.

This application became abandoned for failure to fully respond to the Notice to File Missing Parts mailed November 10, 2003, which set a two-month statutory period to submit an oath or declaration and fee. As no response was received by January 12, 2004, a Notice of Abandonment was mailed to applicant August 26, 2004. Applicant then filed this petition.

A grantable petition for a design application under 37 CFR 1.137(b), as revised December 1, 1997, requires four items: (1) a petition and petition fee; (2) a complete response if not earlier made; (3) a statement that the entire period of delay in prosecution was unintentional; and (4) a terminal disclaimer and disclaimer fee. The requirement for filing a terminal disclaimer (4) has been waived, as the Petition was filed within one month of the mailing of the Notice of Abandonment.

Applicant's petition is **GRANTED**.

The application will be forwarded to an Examiner for initial examination in due course.

Should there be any questions with respect to this decision, please contact Sandra Morris; by mail addressed to: Director, Technology Center 1700/2900, P.O. Box 1450, Alexandria, VA 22313-1450; or by telephone at (571) 272-2622 or by facsimile transmission at (571) 273-2622.

Jacqueline Stone
Director, Technology Center 1700/2900

UNITED STATES PATENT AND TRADEMARK OFFICE

Commissioner for Patents
United States Patent and Trademark Office
P.O. Box 1450
Alexandria, VA 22313-1450
www.uspto.gov

SNELL & WILMER
1920 MAIN STREET
SUITE 1200
IRVINE, CA 92614-7230

COPY MAILED
JUN 21 2004
OFFICE OF PETITIONS

In re Patent No. D489,742 :
Issue Date: May 11, 2004 :
Application No. 29/180,939 : ON PETITION
Filed: May 3, 2003 :
Attorney Docket No. 42534-7300 :

This is a decision on the petition filed June 8, 2004, to waive the rules and accept the correction of the assignee on the front page of the above-identified patent.

The petition is granted.

Telephone inquiries concerning this matter may be directed to Wan Laymon at (703) 306-5685. Any questions concerning the issuance of the Certificate of Correction should be directed to the Certificates of Correction Branch at (703) 305-8309.

The file is being forwarded to the Certificates of Correction Branch for issuance of the requested Certificate of Correction.

Wan Laymon
Petitions Examiner
Office of Petitions
Office of the Deputy Commissioner
for Patent Examination Policy

SPE RESPONSE FOR CERTIFICATE OF CORRECTION

Paper No.:20040927

DATE : September 22, 2005

TO SPE OF : ART UNIT 2912

SUBJECT : Request for Certificate of Correction on Patent No.: D502,105

A response is requested with respect to the accompanying request for a certificate of correction.

Please complete this form and return with file, within **7** days to:
Certificates of Correction Branch - PK 3-910
Palm location **7590** - Tel. No. 305-8201

With respect to the change(s) requested, correcting Office and/or Applicant's errors, should the patent read as shown in the certificate of correction? No new matter should be introduced, nor should the scope or meaning of the claims be changed.

Thank You For Your Assistance **Certificates of Correction Branch**

The request for issuing the above-identified correction(s) is hereby:
Note your decision on the appropriate box.

☒ **Approved** **All** changes apply.

☐ **Approved in Part** Specify below which changes **do not** apply.

☐ **Denied** State the reasons for denial below.

Comments:

STELLA REID
SUPERVISORY DESIGN EXAMINER

SPE: Stella M. Reid **Art Unit** 2912

SPE RESPONSE FOR CERTIFICATE OF CORRECTION

Paper No.: _____

DATE : 1/12/2004

TO SPE OF : ART UNIT 2900 (2914 15)

SUBJECT : Request for Certificate of Correction on Patent No.: D496,762

A response is requested with respect to the accompanying request for a certificate of correction.

Please complete this form and return with file, within **7** days to:
Certificates of Correction Branch - PK 3-922
Palm location **7580** - Tel. No. 305-8309

With respect to the change(s) requested, correcting Office and/or Applicant's errors, should the patent read as shown in the certificate of correction? No new matter should be introduced, nor should the scope or meaning of the claims be changed.

Ernest C. White, LIE305-8339
Certificates of Correction Branch

Thank You For Your Assistance

The request for issuing the above-identified correction(s) is hereby:
Note your decision on the appropriate box.

- ☑ **Approved** — **All** changes apply.
- ☐ **Approved in Part** — Specify below which changes **do not** apply.
- ☐ **Denied** — State the reasons for denial below.

Comments:

_____

_____

_____

_____

_____

Gary D. Watson — **SPE**

2915 — **Art Unit**

PTO/SB/44 (04-04)
Approved for use through 04/30/2007. OMB 0651-0033
U.S. Patent and Trademark Office; U.S. DEPARTMENT OF COMMERCE
Under the Paperwork Reduction Act of 1995, no persons are required to respond to a collection of information unless it displays a valid OMB control number.
(Also Form PTO-1050)

UNITED STATES PATENT AND TRADEMARK OFFICE
CERTIFICATE OF CORRECTION

PATENT NO. : D 496,762

DATED : September 28, 2004

INVENTOR(S) : Jacques DUROCHER et al.

It is certified that error appears in the above-identified patent and that said Letters Patent is hereby corrected as shown below:

The description at the end must read as follows:

The broken lines shown in Figures 1-6 are for illustrative purposes only and form no part of the design.

MAILING ADDRESS OF SENDER:

Marc Gagnon, Reg. No. 51,273, SMART & BIGGAR
1000 de la Gauchetière Street West, suite 3300, Montreal,
Québec, H3B 4W5, CANADA

PATENT NO. D 496,762

No. of additional copies

This collection of information is required by 37 CFR 1.322, 1.323, and 1.324. The information is required to obtain or retain a benefit by the public which is to file (and by the USPTO to process) an application. Confidentiality is governed by 35 U.S.C. 122 and 37 CFR 1.14. This collection is estimated to take 1.0 hour to complete, including gathering, preparing, and submitting the completed application form to the USPTO. Time will vary depending upon the individual case. Any comments on the amount of time you require to complete this form and/or suggestions for reducing this burden, should be sent to the Chief Information Officer, U.S. Patent and Trademark Office, U.S. Department of Commerce, P.O. Box 1450, Alexandria, VA 22313-1450. DO NOT SEND FEES OR COMPLETED

SPE RESPONSE FOR CERTIFICATE OF CORRECTION

Paper No.: _____

DATE : 1/12/2004

TO SPE OF : ART UNIT 2900 ~~(2914)~~ 2915

SUBJECT : Request for Certificate of Correction on Patent No.: D496,762

A response is requested with respect to the accompanying request for a certificate of correction.

Please complete this form and return with file, within 7 days to:
Certificates of Correction Branch - PK 3-922
Palm location **7580** - Tel. No. 305-8309

With respect to the change(s) requested, correcting Office and/or Applicant's errors, should the patent read as shown in the certificate of correction? No new matter should be introduced, nor should the scope or meaning of the claims be changed.

Ernest C. White, LIE305-8339
Certificates of Correction Branch

Thank You For Your Assistance

The request for issuing the above-identified correction(s) is hereby:
Note your decision on the appropriate box.

- ☑ **Approved** — **All** changes apply.
- ☐ **Approved in Part** — Specify below which changes **do not** apply.
- ☐ **Denied** — State the reasons for denial below.

Comments:
This is the second time that I have approved this Extremely Late notice of Correction.
Note: Corrected Art Unit

Gary D. Walton — 2915
SPE — **Art Unit**

PTO/SB/44 (04-04)
Approved for use through 04/30/2007. OMB 0651-0033
U.S. Patent and Trademark Office; U.S. DEPARTMENT OF COMMERCE
Under the Paperwork Reduction Act of 1995, no persons are required to respond to a collection of information unless it displays a valid OMB control number.
(Also Form PTO-1050)

UNITED STATES PATENT AND TRADEMARK OFFICE
CERTIFICATE OF CORRECTION

PATENT NO. : D 496,762

DATED : September 28, 2004

INVENTOR(S) : Jacques DUROCHER et al.

It is certified that error appears in the above-identified patent and that said Letters Patent is hereby corrected as shown below:

The description at the end must read as follows:

The broken lines shown in Figures 1-6 are for illustrative purposes only and form no part of the design.

MAILING ADDRESS OF SENDER:

Marc Gagnon, Reg. No. 51,273, SMART & BIGGAR
1000 de la Gauchetière Street West, suite 3300, Montreal,
Québec, H3B 4W5, CANADA

PATENT NO. D 496,762

No. of additional copies

This collection of information is required by 37 CFR 1.322, 1.323, and 1.324. The information is required to obtain or retain a benefit by the public which is to file (and by the USPTO to process) an application. Confidentiality is governed by 35 U.S.C. 122 and 37 CFR 1.14. This collection is estimated to take 1.0 hour to complete, including gathering, preparing, and submitting the completed application form to the USPTO. Time will vary depending upon the individual case. Any comments on the amount of time you require to complete this form and/or suggestions for reducing this burden, should be sent to the Chief Information Officer, U.S. Patent and Trademark Office, U.S. Department of Commerce, P.O. Box 1450, Alexandria, VA 22313-1450. DO NOT SEND FEES OR COMPLETED

SPE RESPONSE FOR CERTIFICATE OF CORRECTION

Paper No.: _____

DATE : 1/12/2004

TO SPE OF : ART UNIT 2900 ~~(2914)~~ 2915

SUBJECT : Request for Certificate of Correction on Patent No.: D496,762

A response is requested with respect to the accompanying request for a certificate of correction.

Please complete this form and return with file, within **7** days to:
Certificates of Correction Branch - PK 3-922
Palm location **7580** - Tel. No. 305-8309

With respect to the change(s) requested, correcting Office and/or Applicant's errors, should the patent read as shown in the certificate of correction? No new matter should be introduced, nor should the scope or meaning of the claims be changed.

Ernest C. White, LIE305-8339
Certificates of Correction Branch

Thank You For Your Assistance

The request for issuing the above-identified correction(s) is hereby:
Note your decision on the appropriate box.

- ☑ **Approved** — **All** changes apply.
- ☐ **Approved in Part** — Specify below which changes **do not** apply.
- ☐ **Denied** — State the reasons for denial below.

Comments:
Please check employee locator. This examiner has not been in AU 2914 for over 3 years.

Gary D. Walton — **SPE**

2915 — **Art Unit**

PTOL-306 (REV. 7/03)

U.S. DEPARTMENT OF COMMERCE Patent and Trademark Office

PTO/SB/44 (04-04)
Approved for use through 04/30/2007. OMB 0651-0033
U.S. Patent and Trademark Office; U.S. DEPARTMENT OF COMMERCE
Under the Paperwork Reduction Act of 1995, no persons are required to respond to a collection of information unless it displays a valid OMB control number.
(Also Form PTO-1050)

UNITED STATES PATENT AND TRADEMARK OFFICE
CERTIFICATE OF CORRECTION

PATENT NO. : D 496,762

DATED : September 28, 2004

INVENTOR(S) : Jacques DUROCHER et al.

It is certified that error appears in the above-identified patent and that said Letters Patent is hereby corrected as shown below:

The description at the end must read as follows:

The broken lines shown in Figures 1-6 are for illustrative purposes only and form no part of the design.

MAILING ADDRESS OF SENDER:

Marc Gagnon, Reg. No. 51,273, SMART & BIGGAR
1000 de la Gauchetière Street West, suite 3300, Montreal,
Québec, H3B 4W5, CANADA

PATENT NO. D 496,762

No. of additional copies

This collection of information is required by 37 CFR 1.322, 1.323, and 1.324. The information is required to obtain or retain a benefit by the public which is to file (and by the USPTO to process) an application. Confidentiality is governed by 35 U.S.C. 122 and 37 CFR 1.14. This collection is estimated to take 1.0 hour to complete, including gathering, preparing, and submitting the completed application form to the USPTO. Time will vary depending upon the individual case. Any comments on the amount of time you require to complete this form and/or suggestions for reducing this burden, should be sent to the Chief Information Officer, U.S. Patent and Trademark Office, U.S. Department of Commerce, P.O. Box 1450, Alexandria, VA 22313-1450. DO NOT SEND FEES OR COMPLETED

UNITED STATES PATENT AND TRADEMARK OFFICE

Commissioner for Patents
United States Patent and Trademark Office
P.O. Box 1450
Alexandria, VA 22313-1450
www.uspto.gov

Paper 8

NIXON PEABODY LLP
401 9TH STREET, NW
SUITE 900
WASHINGTON DC 20004-2128

COPY MAILED
MAR 30 2006
OFFICE OF PETITIONS

In re Application of
Tat Cheong Kwok
Application No. 29/181,161
Filed: May 7, 2003
Attorney Docket No. 032251-7000

ON PETITION

This is a decision on the petition filed April 19, 2004 to withdraw the holding of abandonment under 37 CFR 1.181.

The petition under 37 CFR 1.181 is **GRANTED**.

This application became abandoned February 18, 2004 for failure to timely pay the issue fee in response to the Notice of Allowance mailed November 17, 2003. Accordingly, a Notice of Abandonment was mailed August 4, 2004.

Petitioner claims that the Notice of Allowance mailed November 17, 2003 was never received in that the Notice was mailed to the wrong address. Petitioners provide proof that a change of correspondence address was filed November 3, 2003 as well as a copy of the docket report, wherein receipt of the Notice of Allowance and Notice of Allowability mailed November 17, 2003 would have been filed, had they been received. To show that the Notices mailed November 17, 2003 were not received, petitioner also explains that after searching the file jacket it was concluded that no correspondence was received for this matter from the USPTO.

A review of the file confirms that a change of correspondence address was in fact filed and processed however, the USPTO inadvertently entered the attorney of record's registration number as the customer number and thus, the Notice of Allowance, Notice of Allowability and the Notice of Abandonment were all mailed to the wrong address, as claimed by the petitioner.

The USPTO records have been corrected and in view of the above, no petition fees are due and none have been charged.

The Notice of Abandonment is withdrawn and this matter is being referred to Technology Center 2913 for a re-mailing of the Notice of Allowance and Notice of Allowability.

Telephone inquiries concerning this matter may be directed to the undersigned Petitions Attorney at (571) 272-3212.

Patricia Faison-Ball

Patricia Faison-Ball
Senior Petitions Attorney
Office of Petitions

UNITED STATES PATENT AND TRADEMARK OFFICE

Commissioner for Patents
United States Patent and Trademark Office
P.O. Box 1450
Alexandria, VA 22313-1450
www.uspto.gov

Paper No.

THE PROCTER & GAMBLE COMPANY
INTELLECTUAL PROPERTY DIVISION - WEST BLDG.
WINTON HILL BUSINESS CENTER - BOX 412
6250 CENTER HILL AVENUE
CINCINNATI OH 45224

COPY MAILED
SEP 28 2007
OFFICE OF PETITIONS

In re Application of Ping Wang et al. Application No. 29/181,173 Filed: May 6, 2003 Attorney Docket No.: PRG 2 00044 Title: TOOTHBRUSH HEAD	: : : : : : : :	DECISION ON PETITION UNDER 37 C.F.R. § 1.181

This is a decision on the petition filed on June 14, 2007, pursuant to 37 C.F.R. § 1.181, requesting that the holding of abandonment in the above-identified application be withdrawn.

The above-identified application became abandoned for failure to reply within the meaning of 37 C.F.R § 1.113 in a timely manner to the final Office action mailed October 5, 2006, which set a shortened statutory period for reply of three months. A Request for Continued Examination was filed on February 5, 2007, along with a one-month extension of time. A Notice of Improper Request for Continued Examination[1] (RCE) was mailed on February 12, 2007, which did not extend the period for response. No additional extensions of time under the provisions of 37 C.F.R § 1.136(a) were obtained, and no further responses were received. Accordingly, the above-identified application became abandoned on February 6, 2007. A notice of abandonment was mailed on May 17, 2007.

1 RCE practice does not apply to design applications, pursuant to 37 C.F.R. § 1.114(e)(4).

With the present petition, Petitioner has asserted that a two-month extension of time and an after-final response were concurrently submitted to the Office on February 9, 2007.

Petitioner has included a copy of this request, and it is noted that it contains a certificate of facsimile transmission. However, Petitioner has failed to comply with 37 C.F.R. § 1.8(b)(3) in that he has failed to include a statement from the individual who executed this certificate of mailing.

However, the electronic file has been reviewed, and a copy of the submission that was presented to the Office on February 9, 2007, has been located.

Moreover, Office records indicate that the two-month extension of time was charged to Petitioner's Deposit account on February 12, 2007, and that this request was received on February 9, 2007.

Considering the facts and circumstances of the delay at issue, as set forth on petition, it is concluded that Petitioner timely submitted a response.

Accordingly, the petition under 37 C.F.R. §1.181(a) is **GRANTED**. The holding of abandonment is **WITHDRAWN**.

The Technology Center will be notified of this decision. The Technology Center's support staff will notify the Examiner of this decision, so that the amendment that was received on February 9, 2007 can be processed.

Telephone inquiries regarding this decision should be directed to the undersigned at (571) 272-3225. All other inquiries concerning examination procedures or status of the application should be directed to the Technology Center.

Paul Shanoski

Paul Shanoski
Senior Attorney
Office of Petitions
United States Patent and Trademark Office

UNITED STATES PATENT AND TRADEMARK OFFICE

SEP 1 0 2004

COMMISSIONER FOR PATENTS
UNITED STATES PATENT AND TRADEMARK OFFICE
P.O. BOX 1450
ALEXANDRIA, VA 22313-1450
www.uspto.go

Woodard, Emhardt, Moriarty, McNett & Henry LLP
Charles J. Meyer
Bank One Center/Tower, Suite 3700
111 Monument Circle
Indianapolis IN 46204-5137

In re Application of	
Matthew Buchanan	:
Serial No.: 29/181,177	:
Filed: May 6, 2003	: PETITION DECISION
Attorney Docket No.: 1405-272	:
	:

This is a decision on applicant's Petition under 37 CFR 1.137(b) submitted July 20, 2004, to revive an unintentionally abandoned application.

This application became abandoned for failure to respond to the Notice of Allowance mailed February 11, 2004, which set a three-month statutory period to pay the issue fee and submit formal drawings. The Issue fee was submitted February 27, 2004; however, as no formal drawings were submitted by May 11, 2004, a Notice of Abandonment was mailed July 13, 2004.

A grantable petition under 37 CFR 1.137(b), as revised December 1, 1997, requires four items: (1) a petition and petition fee; (2) a complete response if not earlier made; (3) a statement that the entire period of delay in prosecution was unintentional; and (4) a terminal disclaimer and disclaimer fee. Because this petition was filed within one month of the mailing of the Notice of Abandonment, the requirement for a terminal disclaimer has been waived.

Applicants' petition is **GRANTED.**

The Terminal Disclaimer fee of $110.00 will be refunded to applicant's Deposit Account 23-3030, as directed

The application will be forwarded to Issue Branch to be processed as a patent in due course.

Should there be any questions with respect to this decision, please contact Sandra Morris; by mail addressed to: Director, Technology Center 3700/2900, P.O. Box 1450, Alexandria, VA 22313-1450; or by telephone at (571) 272-2622.

John Kittle
Director, Technology Center 3700/2900

UNITED STATES PATENT AND TRADEMARK OFFICE

JUL 16 2004

Commissioner for Patents
United States Patent and Trademark Office
P.O. Box 1450
Alexandria, VA 22313-1450
www.uspto.go

RODEY, DICKASON, SLOAN, AKIN & ROBB, PA
P.O. BOX 1888
ALBUQUERQUE, NM 87103-1888

In re Application of	:
James M. Carter	:
Serial No.: 29/181,195	: PETITION DECISION
Filed: May 6, 2003	:
Attorney Docket No.: 13429-43102	:

This is a decision on applicant's Petition under 37 CFR 1.137(b) submitted April 14, 2004, to revive an unintentionally abandoned application.

This application became abandoned for failure to respond to the Notice of Allowance mailed December 24, 2003, which set a three-month statutory period to pay the issue fee. As no response was received by March 24, 2004, the application was abandoned. Applicant then filed this petition.

A grantable petition under 37 CFR 1.137(b), as revised December 1, 1997, requires four items: (1) a petition and petition fee; (2) a complete response if not earlier made; (3) a statement that the entire period of delay in prosecution was unintentional; and (4) a terminal disclaimer and disclaimer fee. Because this petition was filed within one month of abandonment, the requirement for a terminal disclaimer has been waived.

Applicant's petition is **GRANTED.**

The application will be forwarded to Issue Branch to be processed as a patent in due course.

The $55.00 Terminal Disclaimer fee will be refunded to applicant's Deposit Account 18-1754, as directed.

Should there be any questions with respect to this decision, please contact Sandra Morris; by mail addressed to: Director, Technology Center 3700/2900, P.O. Box 1450, Alexandria, VA 22313-1450; or by telephone at (571) 272-2622.

John Kittle
Director, Technology Center 3700/2900

UNITED STATES PATENT AND TRADEMARK OFFICE

JAN 12 2005

COMMISSIONER FOR PATENTS
UNITED STATES PATENT AND TRADEMARK OFFICE
P.O. BOX 1450
ALEXANDRIA, VA 22313-1450
www.uspto.gov

RODEY, DICKASON, SLOAN, AKIN & ROBB, PA
P.O. BOX 1888
ALBUQUERQUE NM 87103

In re Application of	
James M. Carter	:
Serial No.: 29/181,196	:
Filed: May 6, 2003	: PETITION DECISION
Attorney Docket No.: 13429-43101	:
	:

This is a decision on applicant's Petition under 37 CFR 1.137(b) submitted April 14, 2004, to revive an unintentionally abandoned application. The delay in acting upon this petition is regretted.

This application became abandoned for failure to fully respond to the Notice of Allowance mailed December 24, 2003, which set a three-month statutory period to pay the Issue fee. As no response was received by March 24, 2004, the application was abandoned. Applicant then filed this petition.

A grantable petition under 37 CFR 1.137(b), as revised December 1, 1997, requires four items: (1) a petition and petition fee; (2) a complete response if not earlier made; (3) a statement that the entire period of delay in prosecution was unintentional; and (4) a terminal disclaimer and disclaimer fee. The requirement for a terminal disclaimer has been waived, as the petition was submitted within one month of the mailing of the Notice of Abandonment.

Applicant's petition is **GRANTED.**

The Terminal disclaimer fee of $55.00 will be refunded to applicant's Deposit Account 18-1754, as directed.

The application will be forwarded to Publications Branch to be issued into a Patent in due course.

Should there be any questions with respect to this decision, please contact Sandra Morris; by mail addressed to: Director, Technology Center 3700/2900, P.O. Box 1450, Alexandria, VA 22313-1450; or by telephone at (571) 272-2622.

John Kittle
Director, Technology Center 3700/2900

UNITED STATES PATENT AND TRADEMARK OFFICE

JAN 12 2005

COMMISSIONER FOR PATENTS
UNITED STATES PATENT AND TRADEMARK OFFICE
P.O. BOX 1450
ALEXANDRIA, VA 22313-1450
www.uspto.gov

MCKEE, VOORHEES & SEASE, P.L.C.
801 GRAND AVENUE
SUITE 3200
DES MOINES IA 50309-2721

In re Application of
Puneet Nanda
Serial No.: 29/181,304
Filed: May 8, 2003
Attorney Docket No.: P06225US00

: PETITION DECISION

This is a decision on applicant's Petition under 37 CFR 1.137(b) submitted July 22, 2004, to revive an unintentionally abandoned application. The delay in acting upon this petition is regretted.

This application became abandoned for failure to fully respond to the Notice of Allowance mailed February 10, 2004, which set a three-month statutory period to pay the Issue fee and submit formal drawings. Applicant paid the Issue fee March 2, 2004; however, as no formal drawings were submitted by May 10, 2004, a Notice of Abandonment was mailed July 13, 2004. Applicant then filed this petition.

A grantable petition under 37 CFR 1.137(b), as revised December 1, 1997, requires four items: (1) a petition and petition fee; (2) a complete response if not earlier made; (3) a statement that the entire period of delay in prosecution was unintentional; and (4) a terminal disclaimer and disclaimer fee. The requirement for a terminal disclaimer has been waived, as the petition was submitted within one month of the mailing of the Notice of Abandonment.

Applicant's petition is **GRANTED.**

The application will be forwarded to Publications Branch to be issued into a Patent in due course.

Should there be any questions with respect to this decision, please contact Sandra Morris; by mail addressed to: Director, Technology Center 3700/2900, P.O. Box 1450, Alexandria, VA 22313-1450; or by telephone at (571) 272-2622.

John Kittle
Director, Technology Center 3700/2900

UNITED STATES PATENT AND TRADEMARK OFFICE

Commissioner for Patents
United States Patent and Trademark Office
P.O. Box 1450
Alexandria, VA 22313-1450
www.uspto.gov

PATENTTM.US
P. O. BOX 82788
PORTLAND, OR 97282-0788

COPY MAILED
FEB 06 2007
OFFICE OF PETITIONS

In re Application of

John K. Ikeda :

Application No. 29/181,322

: DECISION ON PETITION

Filed: May 7, 2003

:

Attorney Docket No. 0720US

This is a decision on the petition under 37 CFR 1.137(b), filed, November 2, 2006, to revive the above-identified application.

The petition is **GRANTED**.

The above-cited application became abandoned for failure to reply in a timely manner to the non-final Office action mailed February 25, 2004, which set a shortened statutory period for reply of three (3) months from its mailing date. No extension of time pursuant to 37 CFR 1.136(a) was obtained within the allowable period. Accordingly, the application became abandoned on May 26, 2004. A Notice of Abandonment was mailed November 3, 2004.

The above-identified application has been abandoned for an extended period of time. The Patent and Trademark Office is relying on petitioner's duty of candor and good faith and accepting the statement that the entire delay in filing the required reply form the due date for the reply until the filing of a grantable petition pursuant to 37 CFR 1.137(b) was unintentional. See Changes to Patent Practice and Procedure, 62 Fed. Reg. at 53160 and 53178; 1203 Off. Gaz. Pat. Office at 88 and 103 (responses to comments 64 and 109) (applicant obligated under 37 CFR 10.18 to inquire into the underlying facts and circumstances when providing the statement required by 37 CFR 1.137(b) to the Patent and Trademark Office.

The terminal disclaimer filed November 2, 2006, is noted.

The application is being forwarded to Technology Center 2900, GAU 2913 for further processing.

Telephone inquiries concerning this decision should be directed to the undersigned at (571) 272-3222.

Kenya A. McLaughlin
Petitions Attorney
Office of Petitions

SPE RESPONSE FOR CERTIFICATE OF CORRECTION

Paper No.:20070829

DATE : August 29, 2007

TO SPE OF : ART UNIT 2913

SUBJECT : Request for Certificate of Correction on Patent No.: D493,989

A response is requested with respect to the accompanying request for a certificate of correction.

Please complete this form and return with file, within **7** days to:
Certificates of Correction Branch - PK 3-910
Palm location **7590** - Tel. No. 305-8201

With respect to the change(s) requested, correcting Office and/or Applicant's errors, should the patent read as shown in the certificate of correction? No new matter should be introduced, nor should the scope or meaning of the claims be changed.

Thank You For Your Assistance **Certificates of Correction Branch**

The request for issuing the above-identified correction(s) is hereby:
Note your decision on the appropriate box.

☒ **Approved** **All** changes apply.

☐ **Approved in Part** Specify below which changes **do not** apply.

☐ **Denied** State the reasons for denial below.

Comments:

Request submitted 9/1/04 is approved.

Caron D Veynar

SPE: Caron D. Veynar **Art Unit** 2913

UNITED STATES PATENT AND TRADEMARK OFFICE

COMMISSIONER FOR PATENTS
UNITED STATES PATENT AND TRADEMARK OFFICE
P.O. BOX 1450
ALEXANDRIA, VA 22313-1450
www.uspto.gov

6/27/05

OSTROLENK FABER GERB & SOFFEN
1180 AVENUE OF THE AMERICAS
NEW YORK NY 10036-8403

In re Application of
Luis Novoa :
Serial No.: 29/181,535 :
Filed: May 12, 2003 : PETITION DECISION
Attorney Docket No.: D/1336-175 :

This is in response to applicant's Request to Set Aside Holding of Abandonment, which is being treated as a Petition under 37 CFR 1.181, filed April 29. 2005, based on having responded to the Office action.

A review of the file history shows that a Notice to File Missing Parts was mailed August 15, 2003, setting a two month period to submit an oath or declaration and a surcharge. As no response was submitted by October 15, 2003, a Notice of Abandonment was mailed February 2, 2005. This petition followed.

Applicant has provided a copy of the response, which includes a Certificate of Mailing date of September 24, 2003. While this paper was never associated with the application, it is clear that the response was timely filed, and the application was clearly abandoned in error.

Furthermore, applicant has noted that the declaration was filed originally with the application, and the Notice to File Missing Parts was in error. Applicant is advised that Page 1 of the Declaration was not part of the application; however, due to applicant's return receipt post card submitted when the application was filed and stamped by the Office, it is assumed that a complete declaration was filed.

Applicant's petition is **GRANTED.**

The application will be promptly forwarded to an Examiner for initial examination in due course.

Should there be any questions with respect to this decision, please contact Sandra Morris; by mail addressed to: Director, Technology Center 1700/2900, P.O. Box 1450, Alexandria, VA 22313-1450; or by telephone at (571) 272-2622.

Jacqueline Stone
Director, Technology Center 1700/2900

UNITED STATES PATENT AND TRADEMARK OFFICE

COMMISSIONER FOR PATENTS
UNITED STATES PATENT AND TRADEMARK OFFICE
P.O. BOX 1450
ALEXANDRIA, VA 22313-1450
www.uspto.gov

DIANE DUNN MCKAY
MATHEWS, COLLINS, SHEPHAR & MCKAY P.A.
SUITE 360
100 THANET CIRCLE
PRINCETON, NJ 08540

6/24/05

In re Application of
Ok-Nam Cho
Serial No.: 29/181,597
Filed: May 11, 2003
Attorney Docket No.: 4898-106 US

: PETITION DECISION

This is a decision on applicant's petition to revive patent application under 37 CFR 1.137(b), received July 14, 2004, to revive an unintentionally abandoned application. The extreme delay in acting upon this petition is regretted.

This application became abandoned for failure to fully respond to the Notice of Allowance mailed January 6, 2004, which set a three-month statutory period to submit the Issue Fee and formal drawings. The Issue fee was submitted January 14, 2004; however, as no formal drawings were received by April 6, 2004, a Notice of Abandonment was mailed June 7, 2004. Applicant then filed this petition.

A grantable petition for a design application under 37 CFR 1.137(b), as revised December 1, 1997, requires four items: (1) a petition and petition fee; (2) a complete response if not earlier made; (3) a statement that the entire period of delay in prosecution was unintentional; and (4) a terminal disclaimer and disclaimer fee. The requirement for a terminal disclaimer has been waived, as the petition was filed within two months of the mailing of the Notice of Abandonment.

Applicant's petition is **GRANTED**.

The application will be forwarded to Publication Division for printing as a patent in due course.

Should there be any questions with respect to this decision, please contact Sandra Morris; by mail addressed to: Director, Technology Center 1700/2900, P.O. Box 1450, Alexandria, VA 22313-1450; or by telephone at (571) 272-2622.

JMStone

Jacqueline Stone
Director, Technology Center 1700/2900

UNITED STATES PATENT AND TRADEMARK OFFICE

COMMISSIONER FOR PATENTS
UNITED STATES PATENT AND TRADEMARK OFFICE
P.O. BOX 1450
ALEXANDRIA, VA 22313-1450
www.uspto.gov

DEC 4 2003

#9

P. FRANCOIS DE VILLIERS
CREATIVE LABS, INC.
LEGAL DEPARTMENT
MILPITAS, CA 95035

In re Application of	:	
Yam Fei Lian	:	
Serial No.: 29/181,635	:	**REQUEST FOR EXPEDITED EXAMINATION**
Filed: May 14, 2003	:	
For: Compact Media Player	:	

This is in response to the Request for expedited examination applicant filed July 1, 2003, to expedite the above-identified application under the provisions of 37 CFR 1.155.

Applicant has satisfied the provisions set forth in 37 CFR 1.155, thus the petition is **GRANTED**.

The application will be forwarded to the examiner for action on the merits commensurate with this decision.

Should there be any questions with regard to this letter please contact John Kittle by letter addressed to the Director, Technology Center 3700/2900, or by telephone at (703)308-0873 or by facsimile transmission at (703)308-3139.

John E. Kittle

John E. Kittle
Director
Technology Center 3700/2900

703-872-9322

SPE RESPONSE FOR CERTIFICATE OF CORRECTION

Paper No.: _____

DATE : 12/28/07

TO SPE OF : Technology Center 2916

29/181700

SUBJECT : Request for Certificate of Correction on Patent No.: D502642S

A response is requested with respect to the accompanying request for a certificate of correction.

Please complete this form and return with file, within 7 days to:
Palm location **7580, Certificates of Correction Branch – South Tower – 9A22**
If response is for an IFW, **return to employee (named below) via PUBSCofC Team in MADRAS.**
With respect to the change(s) requested, correcting Office and/or Applicant's errors, should the patent read as shown in the certificate of correction (COCIN)? No new matter should be introduced, nor should the scope or meaning of the claims be changed.

Elisha Evans

Thank You For Your Assistance

Certificates of Correction Branch
Tel. No. 703-308-9390 EXT 110

The request for issuing the above-identified correction(s) is hereby:
Note your decision on the appropriate box.

- ☒ **Approved** — **All** changes apply.
- ☐ **Approved in Part** — Specify below which changes **do not** apply.
- ☐ **Denied** — State the reasons for denial below.

Comments:

Pls. replace Fig. 6 filed 1/13/2005 as indicated in the request for certificate of correction.

IAN SIMMONS
SUPERVISORY PATENT EXAMINER

SPE

2916

Art Unit

UNITED STATES PATENT AND TRADEMARK OFFICE

JUL 27 2005

Commissioner for Patents
United States Patent and Trademark Office
P.O. Box 1450
Alexandria, VA 22313-1450
www.uspto.go

DANIEL R POTE
SNELL & WILMER LLP
ONE ARIZONA CENTER
400 EAST VAN BUREN
PHOENIX, AZ 85004-2202

#6

In re Application of	:
Thomas Overthun	:
Serial No.: 29/181,810	: PETITION DECISION
Filed: May 15, 2003	:
Attorney Docket No.:42280-1900	:

This is a decision on applicant's Petition filed under 37 CFR 1.137(b) filed May 3, 2004, to revive an unintentionally abandoned application.

This application became abandoned for failure to respond to the Notice to File Missing Parts of Application mailed June 30, 2003, which set a two-month statutory period to respond. As no response was received by September 2, 2003, a Notice of Abandonment was mailed March 3, 2004. Applicant then filed this petition.

A grantable petition under 37 CFR 1.137(b), as revised December 1, 1997, requires four items: (1) a petition and petition fee; (2) a complete response if not earlier made; (3) a statement that the entire period of delay in prosecution was unintentional; and (4) a terminal disclaimer and disclaimer fee. Because this petition was filed within two months of receiving the Notice of Abandonment, the requirement for a terminal disclaimer has been waived.

Applicant is furthermore advised that as the application was abandoned, the Petition for a five-month extension of time has been dismissed.

Applicant's petition is **GRANTED.**

The application will be forwarded to an Examiner for initial examination in due course.

The Terminal Disclaimer fee of $55.00 and the Extension of Time fee of $1005.00 will be refunded to applicant's Deposit Account 19-2814, as directed.

Should there be any questions with respect to this decision, please contact Sandra Morris; by mail addressed to: Director, Technology Center 3700/2900, P.O. Box 1450, Alexandria, VA 22313-1450; or by telephone at (571) 272-2622.

John Kittle
Director, Technology Center 3700/2900

UNITED STATES PATENT AND TRADEMARK OFFICE

Commissioner for Patents
United States Patent and Trademark Office
P.O. Box 1450
Alexandria, VA 22313-1450
www.uspto.gov

8/19/05

RONALD A. SANDLER
JONES DAY
77 WEST WACKER DRIVE
CHICAGO, IL 60601-1692

In re Application of
William H. Goodworth
Serial No.: 29/181,990
Filed: May 19, 2003
Attorney Docket No.: 087522-452-432

: PETITION DECISION

This is a decision on applicant's petition to revive patent application under 37 CFR 1.137(b), filed April 20, 2005, to revive an unintentionally abandoned application.

This application became abandoned for failure to respond to the Notice of Allowance mailed January 11, 2005, which set a three-month statutory period to submit the Issue Fee. As no response was received by April 11, 2005, the application was abandoned; applicant then filed this petition.

A grantable petition for a design application under 37 CFR 1.137(b), as revised December 1, 1997, requires four items: (1) a petition and petition fee; (2) a complete response if not earlier made; (3) a statement that the entire period of delay in prosecution was unintentional; and (4) a terminal disclaimer and disclaimer fee. The requirement for a terminal disclaimer has been waived, as the petition was filed before the mailing of the Notice of Abandonment.

Applicant's petition is **GRANTED**.

The application will be forwarded to Publication Division for printing as a patent in due course.

Should there be any questions with respect to this decision, please contact Sandra Morris; by mail addressed to: Director, Technology Center 1700/2900, P.O. Box 1450, Alexandria, VA 22313-1450; or by telephone at (571) 272-2622.

Jacqueline M. Stone

Jacqueline Stone
Director, Technology Center 1700/2900

SPE RESPONSE FOR CERTIFICATE OF CORRECTION

Paper No.: _____

DATE : 11-28-07

TO SPE OF : ART UNIT 2911

SUBJECT : Request for Certificate of Correction for Appl. No.: 29/182052 Patent No.: D491,842

Please respond to this request for a certificate of correction within 7 days.

Please review the requested changes/corrections as shown in the **COCIN** document(s) in the IFW application image. No new matter should be introduced, nor should the scope or meaning of the claims be changed.

Please Review C O&C

Please complete the response (see below) and forward the completed response to scanning using document code **COCX**.

Certificates of Correction Branch
Ennis Young
703-308-9390 ext. 117

Thank You For Your Assistance

The request for issuing the above-identified correction(s) is hereby:

Note your decision on the appropriate box.

- ☑ Approved — All changes apply.
- ☐ Approved in Part — Specify below which changes do not apply.
- ☐ Denied — State the reasons for denial below.

Comments: _____

Gary D. Watson
SPE

2915
Art Unit

SPE RESPONSE FOR CERTIFICATE OF CORRECTION

Paper No.: _____

DATE : 11-28-07

TO SPE OF : ART UNIT 2911

SUBJECT : Request for Certificate of Correction for Appl. No.: 29/182052 Patent No.: D491,842

Please respond to this request for a certificate of correction within 7 days.

Please review the requested changes/corrections as shown in the **COCIN** document(s) in the IFW application image. No new matter should be introduced, nor should the scope or meaning of the claims be changed.

Please Review COIC

Please complete the response (see below) and forward the completed response to scanning using document code **COCX**.

Certificates of Correction Branch
Ennis Young
703-308-9390 ext. 117

Thank You For Your Assistance

The request for issuing the above-identified correction(s) is hereby:

Note your decision on the appropriate box.

- ☑ Approved — All changes apply.
- ☐ Approved in Part — Specify below which changes do not apply.
- ☐ Denied — State the reasons for denial below.

Comments: _____

Gary D. Watson — SPE

2915 — Art Unit

UNITED STATES PATENT AND TRADEMARK OFFICE

UNITED STATES DEPARTMENT OF COMMERCE
United States Patent and Trademark Office
Address: COMMISSIONER FOR PATENTS
P.O. Box 1450
Alexandria, Virginia 22313-1450
www.uspto.gov

APPLICATION NO.	FILING DATE	FIRST NAMED INVENTOR	ATTORNEY DOCKET NO.	CONFIRMATION NO.
29/182,081	08/01/2003	Cristoforo Guido Carfagnini		1157

7590 01/26/2005

Cristoforo G. Carfagnini
Unit 2B
7766 Martingrove Rd
Woodbridge, ON L4L 2C7
CANADA

EXAMINER
ALBERT, ELIZABETH

ART UNIT	PAPER NUMBER
2913	

DATE MAILED: 01/26/2005

Please find below and/or attached an Office communication concerning this application or proceeding.

UNITED STATES PATENT AND TRADEMARK OFFICE

Commissioner for Patents
United States Patent and Trademark Office
P.O. Box 1450
Alexandria, VA 22313-1450
www.uspto.gov

1/25/05

In re Application of	:	
Cristoforo Guido Carfagnini	:	NOTICE OF WITHDRAWAL
Serial No. 29/182,081	:	FROM ISSUE
Filed: August 01, 2003	:	UNDER 37 CFR 1.313(b)
For: GRABBER	:	

The above-identified application is withdrawn from issue after payment of the issue fee due to reopening of prosecution. See 37 CFR 1.313 (b).

The above-identified application is hereby withdrawn from issue.

The issue fee is refundable upon written request. If, however, the application is again found allowable, the issue fee can be applied toward payment of the issue fee in the amount identified on the new Notice of Allowance and Issue Fee Due upon written request. This request and any balance due must be received on or before the due date noted in the new Notice of Allowance in order to prevent abandonment of the application.

Telephone inquiries should be directed to Joel Sincavage at (571) 272-2610.

The above-identified application is being forwarded to the examiner for prompt appropriate action, including notifying applicant of the new status of this application.

J. M. Stone

Jacqueline Stone, Director
Technology Center 1700
Chemical and Materials Engineering

Carfagnini, Cristoforo G.
7766 Martingrove Rd Unit 2B
Woodbridge, Ontario
L4L 2C7

cc: Allowed Files—Pk3-910

UNITED STATES PATENT AND TRADEMARK OFFICE

COMMISSIONER FOR PATENTS
UNITED STATES PATENT AND TRADEMARK OFFICE
P.O. BOX 1450
ALEXANDRIA, VA 22313-1450
www.uspto.gov

NOV 18 2004

BURNS DOANE SWECKER & MATHIS LLP
POST OFFICE BOX 1404
ALEXANDRIA VA 22313-1404

In re Application of	
Bai Jun Chen	:
Serial No.: 29/182,093	:
Filed: May 21, 2003	: PETITION DECISION
Attorney Docket No.: 016660-154	:
	:

This is a decision on applicant's Petition for Withdrawal of Notice of Abandonment under 37 CFR 1.181, submitted August 13, 2004, to revive an unavoidably abandoned application.

This application became abandoned for failure to fully respond to the Notice of Allowance mailed March 23, 2004, which set a three-month statutory period to submit the Issue Fee and formal drawings. The Issue fee was submitted June 23, 2004; however, as no formal drawings were received, a Notice of Abandonment was mailed August 4, 2004. Applicant then filed this petition.

Applicant has submitted that the formal drawings were timely filed, and has submitted copies of the response which show that the formal drawings were timely filed on June 22, 2004. These papers were eventually matched with the application; therefore, the abandonment of the application was clearly in error.

Applicant's petition is **GRANTED.**

The application will be forwarded to Publications to be printed as a patent in due course.

Should there be any questions with respect to this decision, please contact Sandra Morris; by mail addressed to: Director, Technology Center 3700/2900, P.O. Box 1450, Alexandria, VA 22313-1450; or by telephone at (571) 272-2622.

John Kittle
Director, Technology Center 3700/2900

UNITED STATES PATENT AND TRADEMARK OFFICE

COMMISSIONER FOR PATENTS
UNITED STATES PATENT AND TRADEMARK OFFICE
P.O. BOX 1450
ALEXANDRIA, VA 22313-1450
www.uspto.gov

MIDDLETON & REUTLINGER
2500 BROWN & WILLIAMSON TOWER
LOUISVILLE KY 40202

In re Application of
Dennis K. Gregory
Serial No.: 29/182,130
Filed: May 20, 2003, 2003
Attorney Docket No.: ZK522/03050

: PETITION DECISION

This is in response to applicant's Petition to Withdraw the Holding of Abandonment under 37 CFR 1.181, filed October 18, 2004, based on having responded to the Office action.

A review of the file history shows that a Notice of Allowance was mailed May 14, 2004, setting a three month statutory period to pay the Issue fee and submit formal drawings. The issue fee was submitted July 21, 2004; however, as the formal drawings were not received by August 16, 2004, a Notice of Abandonment was mailed on September 30, 2004.

Applicant has stated that the formal drawings were timely submitted on July 21, 2004, and has included a copy of the response with a Certificate of Mailing and a Post Card Receipt. Therefore, as the response was timely filed, the Office in error abandoned the application.

Applicant's petition is **GRANTED.**

The application will be promptly forwarded to Publications to be printed as a patent in due course.

Should there be any questions with respect to this decision, please contact Sandra Morris; by mail addressed to: Director, Technology Center 1700/2900, P.O. Box 1450, Alexandria, VA 22313-1450; or by telephone at (571) 272-2622.

Jacqueline Stone
Director, Technology Center 1700/2900

UNITED STATES PATENT AND TRADEMARK OFFICE

COMMISSIONER FOR PATENTS
UNITED STATES PATENT AND TRADEMARK OFFICE
P.O. BOX 1450
ALEXANDRIA, VA 22313-1450
www.uspto.gov

CHARLES E. BAXLEY, ESQ.
90 JOHN STREET
THIRD FLOOR
NEW YORK, NY 10038

5/16/05

In re Application of
Mei-Hsiang Lai
Serial No.: 29/182,147
Filed: May 19, 2003
Attorney Docket No.: 13772 B

: PETITION DECISION

This is a decision on applicant's petition to revive patent application under 37 CFR 1.137(b), received February 9, 2005, to revive an unintentionally abandoned application.

This application became abandoned for failure to respond to the Notice of Allowance mailed February 23, 2004, which set a three-month statutory period to submit the Issue Fee. As no response was received by May 24, 2004, a Notice of Abandonment was mailed to applicant July 13, 2004. Applicant then filed this petition.

A grantable petition for a design application under 37 CFR 1.137(b), as revised December 1, 1997, requires four items: (1) a petition and petition fee; (2) a complete response if not earlier made; (3) a statement that the entire period of delay in prosecution was unintentional; and (4) a terminal disclaimer and disclaimer fee. A terminal disclaimer was submitted by facsimile on February 23, 2005.

Applicant's petition is **GRANTED**.

The Terminal Disclaimer fee of $65.00 will be charged to Applicant's Deposit Account 02-1435, as directed.

The application will be forwarded to Publication Division for printing as a patent in due course.

Should there be any questions with respect to this decision, please contact Sandra Morris; by mail addressed to: Director, Technology Center 1700/2900, P.O. Box 1450, Alexandria, VA 22313-1450; or by telephone at (571) 272-2622 or by facsimile transmission at (571) 273-2622.

JMstone
Jacqueline Stone
Director, Technology Center 1700/2900

UNITED STATES PATENT AND TRADEMARK OFFICE

COMMISSIONER FOR PATENTS
UNITED STATES PATENT AND TRADEMARK OFFICE
P.O. BOX 1450
ALEXANDRIA, VA 22313-1450
www.uspto.gov

JAN 21 2005

Nicholas A. Camasto Ltd
545 Thatcher
River Forest IL 60305

In re Application of
Royce H. Husted
Serial No.: 29/182,158
Filed: May 20, 2003
Attorney Docket No.: RH-32DES

: PETITION DECISION

This is a decision on applicant's Petition under 37 CFR 1.137(b) submitted November 22, 2004, to revive an unintentionally abandoned application.

This application became abandoned for failure to fully respond to the Notice of Allowance mailed June 15, 2004, which set a three-month statutory period to pay the Issue fee and submit formal drawings. The issue fee was submitted July 23, 2004; however, as the required formal drawings were not received by September 15, 2004, a Notice of Abandonment was mailed November 3, 2004. Applicant then filed this petition.

A grantable petition under 37 CFR 1.137(b), as revised December 1, 1997, requires four items: (1) a petition and petition fee; (2) a complete response if not earlier made; (3) a statement that the entire period of delay in prosecution was unintentional; and (4) a terminal disclaimer and disclaimer fee. The requirement for a terminal disclaimer has been waived, as the petition was submitted within one month of the mailing of the Notice of Abandonment.

Applicant's petition is **GRANTED.**

The terminal disclaimer fee of $55.00 will be refunded by Treasury Check in due course.

The application will be forwarded to Publications Branch to be issued into a Patent in due course.

Should there be any questions with respect to this decision, please contact Sandra Morris; by mail addressed to: Director, Technology Center 1700/2900, P.O. Box 1450, Alexandria, VA 22313-1450; or by telephone at (571) 272-2622.

Jacqueline Stone
Director, Technology Center 1700/2900

UNITED STATES PATENT AND TRADEMARK OFFICE

COMMISSIONER FOR PATENTS
UNITED STATES PATENT AND TRADEMARK OFFICE
P.O. BOX 1450
ALEXANDRIA, VA 22313-1450
www.uspto.gov

Paper No. 2

IAN F. BURNS & ASSOCIATES
SUITE 222
1575 DELUCCHI LANE
RENO, NV 89502

COPY MAILED
NOV 24 2003
OFFICE OF PETITIONS

In re Application of :
Jerald C. Seelig et al :
Application No. 29/182,197 :
Filed: May 20, 2003 :
Attorney Docket No. 619.725 :

ON PETITION

This is a decision on the petition, filed November 21, 2003, under 37 CFR 1.313(c)(3) to withdraw the above-identified application from issue after payment of the issue fee.

The petition is **GRANTED**.

The above-identified application is hereby withdrawn from issue in favor of a continued prosecution application (CPA) under 37 CFR 1.53(d).

Petitioner is advised that the issue fee paid on October 22, 2003 in the parent application is not refundable nor can it be applied towards any new Notice of Allowance which may issue on the CPA filed November 21, 2003.

Telephone inquiries should be directed to Wan Laymon at (703) 306-5685.

The application is being forwarded to Technology Center AU 2912 for processing of the CPA.

Wan Laymon
Petitions Examiner
Office of Petitions
Office of the Deputy Commissioner
for Patent Examination Policy

UNITED STATES PATENT AND TRADEMARK OFFICE

Commissioner for Patents
United States Patent and Trademark Office
P. O. Box 1450
Alexandria, VA 22313-1450
www.uspto.gov

Paper No. 3

BROWDY AND NEIMARK, P.L.L.C.
624 NINTH STREET, NW
SUITE 300
WASHINGTON, DC 20001-5303

COPY MAILED

SEP 1 7 2003

OFFICE OF PETITIONS

In re Application of :
Volodymyr Zalyasko :
Application No. 29/182,219 :
Filed: May 22, 2003 :
Attorney Docket No. ZALYASK02

NOTICE

This is a notice regarding your request for acceptance of a fee deficiency submission under 37 CFR 1.28. On September 1, 1998, the Court of Appeals for the Federal Circuit held that 37 CFR 1.28(c) is the sole provision governing the time for correction of the erroneous payment of the issue fee as a small entity. **See DH Technology v. Synergystex International, Inc. 154 F.3d 1333, 47 USPQ2d 1865 (Fed. Cir. Sept. 1, 1998).**

The Office no longer investigates or rejects original or reissue applications under 37 CFR 1.56. **1098 Off. Gaz. Pat. Office 502 (January 3, 1989)**. Therefore, nothing in this Notice is intended to imply that an investigation was done.

Your fee deficiency submission under 37 CFR 1.28 is hereby **ACCEPTED**.

Inquiries related to this communication should be directed to the Office of Petitions Staff at (703) 305-9285.

This file is being forwarded to Technology Center 2900.

Irvin Dingle
Petitions Examiner
Office of Petitions
Office of the Deputy Commissioner
for Patent Examination Policy

UNITED STATES PATENT AND TRADEMARK OFFICE

COMMISSIONER FOR PATENTS
UNITED STATES PATENT AND TRADEMARK OFFICE
P.O. BOX 1450
ALEXANDRIA, VA 22313-1450
www.uspto.gov

ADAMS EVANS P.A.
2180 TWO WACHOVIA CENTER
CHARLOTTE, NC 28282

6/24/05

In re Application of
Michael W. Kalinowski
Serial No.: 29/182,310
Filed: May 23, 2003
Attorney Docket No.: 965/163

: PETITION DECISION

This is a decision on applicant's petition to revive patent application under 37 CFR 1.137(b), received November 22, 2004, to revive an unintentionally abandoned application. The delay in acting upon this petition is regretted.

This application became abandoned for failure to fully respond to the Notice of Allowance mailed June 4, 2004, which set a three-month statutory period to submit the Issue Fee and formal drawings. The Issue fee was submitted August 3, 2004; however, as no formal drawings were received by September 7, 2004, a Notice of Abandonment was mailed November 3, 2004. Applicant then filed this petition.

A grantable petition for a design application under 37 CFR 1.137(b), as revised December 1, 1997, requires four items: (1) a petition and petition fee; (2) a complete response if not earlier made; (3) a statement that the entire period of delay in prosecution was unintentional; and (4) a terminal disclaimer and disclaimer fee. The requirement for a terminal disclaimer has been waived, as the petition was filed within one month of the mailing of the Notice of Abandonment.

Applicant's petition is **GRANTED**.

The Terminal Disclaimer fee of $110.00 will be refunded to applicant's Deposit Account 01-0265, as directed.

The application will be forwarded to Publication Division for printing as a patent in due course.

Should there be any questions with respect to this decision, please contact Sandra Morris; by mail addressed to: Director, Technology Center 1700/2900, P.O. Box 1450, Alexandria, VA 22313-1450; or by telephone at (571) 272-2622.

JMStone

Jacqueline Stone
Director, Technology Center 1700/2900

UNITED STATES PATENT AND TRADEMARK OFFICE

COMMISSIONER FOR PATENTS
UNITED STATES PATENT AND TRADEMARK OFFICE
P.O. BOX 1450
ALEXANDRIA, VA 22313-1450
www.uspto.gov

Adams Evans P.A.
2180 Two Wachovia Center
Charlotte NC 28282

In re Application of	
Michael W. Kalinowski	:
Serial No.: 29/182,311	:
Filed: May 23, 2003	: PETITION DECISION
Attorney Docket No.: 965/162	:
	:

This is a decision on applicant's Petition under 37 CFR 1.137(b) submitted November 22, 2004, to revive an unintentionally abandoned application.

This application became abandoned for failure to fully respond to the Notice of Allowance mailed June 4, 2004, which set a three-month statutory period to pay the Issue fee and submit formal drawings. The issue fee was submitted August 3, 2004; however, as the required formal drawings were not received by September 7, 2004, a Notice of Abandonment was mailed November 3, 2004. Applicant then filed this petition.

A grantable petition under 37 CFR 1.137(b), as revised December 1, 1997, requires four items: (1) a petition and petition fee; (2) a complete response if not earlier made; (3) a statement that the entire period of delay in prosecution was unintentional; and (4) a terminal disclaimer and disclaimer fee. The requirement for a terminal disclaimer has been waived, as the petition was submitted within one month of the mailing of the Notice of Abandonment.

Applicant's petition is **GRANTED.**

The terminal disclaimer fee of $110.00 will be refunded to applicant's Deposit Account 01-0265, as directed.

The application will be forwarded to Publications Branch to be issued into a Patent in due course.

Should there be any questions with respect to this decision, please contact Sandra Morris; by mail addressed to: Director, Technology Center 1700/2900, P.O. Box 1450, Alexandria, VA 22313-1450; or by telephone at (571) 272-2622.

JMStone

Jacqueline Stone
Director, Technology Center 1700/2900

UNITED STATES PATENT AND TRADEMARK OFFICE

COMMISSIONER FOR PATENTS
UNITED STATES PATENT AND TRADEMARK OFFICE
P.O. BOX 1450
ALEXANDRIA, VA 22313-1450
www.uspto.gov

2005

Adams Evans P.A.
2180 Two Wachovia Center
Charlotte NC 28282

In re Application of	
Adam Paul Warren	:
Serial No.: 29/182,312	:
Filed: May 23, 2003	: PETITION DECISION
Attorney Docket No.: 965/161	:
	:

This is a decision on applicant's Petition under 37 CFR 1.137(b) submitted November 22, 2004, to revive an unintentionally abandoned application.

This application became abandoned for failure to fully respond to the Notice of Allowance mailed June 4, 2004, which set a three-month statutory period to pay the Issue fee and submit formal drawings. The issue fee was submitted August 3, 2004; however, as the required formal drawings were not received by September 7, 2004, a Notice of Abandonment was mailed November 3, 2004. Applicant then filed this petition.

A grantable petition under 37 CFR 1.137(b), as revised December 1, 1997, requires four items: (1) a petition and petition fee; (2) a complete response if not earlier made; (3) a statement that the entire period of delay in prosecution was unintentional; and (4) a terminal disclaimer and disclaimer fee. The requirement for a terminal disclaimer has been waived, as the petition was submitted within one month of the mailing of the Notice of Abandonment.

Applicant's petition is **GRANTED.**

The terminal disclaimer fee of $110.00 will be refunded to applicant's Deposit Account 01-0265, as directed.

The application will be forwarded to Publications Branch to be issued into a Patent in due course.

Should there be any questions with respect to this decision, please contact Sandra Morris; by mail addressed to: Director, Technology Center 1700/2900, P.O. Box 1450, Alexandria, VA 22313-1450; or by telephone at (571) 272-2622.

JMStone

Jacqueline Stone
Director, Technology Center 1700/2900

UNITED STATES PATENT AND TRADEMARK OFFICE

Commissioner for Patents
United States Patent and Trademark Office
P.O. Box 1450
Alexandria, VA 22313-1450
www.uspto.gov

STEVEN S. PAYNE
8027 ILIFF DRIVE
DUNN LORING VA 22027

MAILED

APR 09 2010

OFFICE OF PETITIONS

In re Application of	:	
Jonzon et al.	:	
Application No. 29/182,318	:	DECISION ON PETITION
Filed: May 27, 2003	:	
Attorney Docket No. 150-114	:	

This is a decision on the petition under the unintentional provisions of 37 CFR 1.137(b), filed February 17, 2010, to revive the above-identified application.

The petition is **GRANTED**.

This application became abandoned for failure to timely pay the issue fee on or before April 6, 2006, as required by the Notice of Allowance and Fee(s) Due mailed January 6, 2006. Accordingly, the date of abandonment of this application is April 7, 2006. A Notice of Abandonment was mailed June 7, 2006.

The petition satisfies the requirements of 37 CFR 1.137(b) in that petitioner has supplied (1) the reply in the form of payment of the issue fee of $860.00; (2) the petition fee of $1,620.00; (3) a proper statement of unintentional delay; (4) a Terminal Disclaimer with the accompanying $140.00 fee.

The request for a terminal disclaimer is accepted and has been made of record.

The address given on the petition differs from the address of record. A courtesy copy of this decision is being mailed to the address given on the petition; however, the Office will mail all future correspondence solely to the address of record.

Telephone inquiries concerning this decision should be directed to the undersigned at (571) 272-7751.

This application is being referred to the Office of Data Management for processing into a patent.

Joan Olszewski

Joan Olszewski
Petitions Examiner
Office of Petitions

cc: Steven S. Payne
P.O. Box
Washington, DC 20035

UNITED STATES PATENT AND TRADEMARK OFFICE

Commissioner for Patents
United States Patent and Trademark Office
P.O. Box 1450
Alexandria, VA 22313-1450
www.uspto.gov

OCT 19 2004

Donald L. Bartels
Coudert Brothers LLP
Two Palo Alto Square
3000 El Camino Real, Fourth Floor
Palo Alto CA 94306

In re Application of	:	
Karim Rashid	:	
Serial No.: 29/182,391	:	DECISION ON PETITION
Filed: May 23, 2003	:	
For: Soap Bottle	:	

This is in response to applicants' petition filed August 26, 2004, to make the above-identified application special under the provisions of 37 CFR 1.102(d), based on infringement.

Applicant has satisfied the provisions set forth in M.P.E.P. 708.02, II. Therefore the petition is **GRANTED**.

The application will be forwarded to the examiner for action on the merits commensurate with this decision.

Should there be any questions with regard to this letter please contact John Kittle by letter addressed to the Director, Technology Center 3700/2900, P.O. Box 1450 Alexandria, VA 22313-1450, or by telephone at (703) 308-0873 or by facsimile transmission at (703) 308-3139.

John E. Kittle

John E. Kittle
Director
Technology Center 3700/2900

UNITED STATES PATENT AND TRADEMARK OFFICE

Commissioner for Patents
United States Patent and Trademark Office
P.O. Box 1450
Alexandria, VA 22313-1450
www.uspto.gov

WINSTON & STRAWN LLP
1700 K STREET, N.W.
WASHINGTON, DC 20006

COPY MAILED

AUG 28 2006

OFFICE OF PETITIONS

In re Application of Rashid :
Application No. 29/182,391 : Decision on Petition
Filing Date: May 23, 2003 :
Attorney Docket No. 250282-4177 :

This is a decision on the petition under 37 CFR 1.137(b), filed March 22, 2006, to revive the above-identified application.

The petition is **DISMISSED**.

This application became abandoned for failure to timely reply to the non-final Office action mailed June 3, 2005. An extension of time under the provisions of 37 CFR 1.136(a) was not obtained. Accordingly, this application became abandoned as of midnight on September 3, 2005. A Notice of Abandonment was mailed January 3, 2006.

37 CFR 1.137(d)(1) states in part, "Any petition to revive pursuant to this section in a design application must be accompanied by a terminal disclaimer and fee as set forth in § 1.321." Therefore, a terminal disclaimer is required for the instant design application.

A terminal disclaimer has not been filed. Therefore, the petition must be dismissed.

Any request for reconsideration should include a terminal disclaimer and the required fee. A copy of a terminal disclaimer form is attached.

Any request for reconsideration must be submitted within TWO (2) MONTHS from the mail date of this decision. No further petition fee is required for the request. Extensions of time under 37 CFR 1.136(a) are NOT permitted. The reconsideration request should include a cover letter entitled "Renewed Petition under 37 CFR 1.137(b)."

Further correspondence with respect to this matter should be addressed as follows:

By mail: Mail Stop Petition
Commissioner for Patents
P.O. Box 1450
Alexandria, VA 22313-1450

By facsimile: (571) 273-8300
Attn: Office of Petitions

By hand: U.S. Patent and Trademark Office
Customer Service Window
Randolph Building
401 Dulany Street
Alexandria, VA 22314

Telephone inquiries regarding this communication should be directed to Petitions Attorney Steven Brantley at (571) 272-3203.

Charles Steven Brantley
Senior Petitions Attorney
Office of Petitions

Attached: PTO/SB/63 Terminal Disclaimer Form

UNITED STATES PATENT AND TRADEMARK OFFICE

Commissioner for Patents
United States Patent and Trademark Office
P.O. Box 1450
Alexandria, VA 22313-1450
www.uspto.gov

WINSTON & STRAWN LLP
PATENT DEPARTMENT
1700 K STREET, N.W.
WASHINGTON DC 20006

COPY MAILED
NOV 29 2006
OFFICE OF PETITIONS

In re Application of Rashid :
Application No. 29/182,391 : Decision on Petition
Filing Date: May 23, 2003 :
Attorney Docket No. 250282-4177 :

This is a decision on the renewed petition under 37 CFR 1.137(b), filed September 5, 2006, to revive the above-identified application.

The petition is **granted**.

This application became abandoned for failure to timely reply to the non-final Office action mailed June 3, 2005. An extension of time under the provisions of 37 CFR 1.136(a) was not obtained. Accordingly, this application became abandoned as of midnight on September 3, 2005. A Notice of Abandonment was mailed January 3, 2006.

The instant petition requests revival of the application.

Petitioner has met the requirements to revive the above-identified application pursuant to 37 CFR 1.137(b). Therefore, the petition is granted and the application is revived.

Technology Center Art Unit 2912 will be informed of the instant decision and the application will be further examined in due course.

Telephone inquiries regarding this communication should be directed to Petitions Attorney Steven Brantley at (571) 272-3203.

Charles Steven Brantley
Senior Petitions Attorney
Office of Petitions

UNITED STATES PATENT AND TRADEMARK OFFICE

COMMISSIONER FOR PATENTS
UNITED STATES PATENT AND TRADEMARK OFFICE
P.O. BOX 1450
ALEXANDRIA, VA 22313-1450
www.uspto.gov

THE CLOROX COMPANY
1221 BROADWAY PO BOX 2351
OAKLAND CA 94623

FEB 12 2005

In re Application of
Edward B. Tucker
Serial No.: 29/182,415
Filed: May 23, 2003
Attorney Docket No.: 493.75

: PETITION DECISION

This is a decision on applicant's Petition under 37 CFR 1.137(b) received August 24, 2004, to revive an unintentionally abandoned application.

This application became abandoned for failure to respond to the Notice of Allowance mailed March 10, 2004, which set a three-month statutory period to pay the Issue fee. As no response was submitted by June 10, 2004, a Notice of Abandonment was mailed August 4, 2004. Applicant then filed this petition.

A grantable petition under 37 CFR 1.137(b), as revised December 1, 1997, requires four items: (1) a petition and petition fee; (2) a complete response if not earlier made; (3) a statement that the entire period of delay in prosecution was unintentional; and (4) a terminal disclaimer and disclaimer fee. The requirement for a terminal disclaimer has been waived, as the petition was submitted within one month of the mailing of the Notice of Abandonment.

Applicant's petition is **GRANTED.**

The application will be forwarded to Publications Branch to be issued into a Patent in due course.

Should there be any questions with respect to this decision, please contact Sandra Morris; by mail addressed to: Director, Technology Center 1700/2900, P.O. Box 1450, Alexandria, VA 22313-1450; or by telephone at (571) 272-2622.

JMStone

Jacqueline Stone
Director, Technology Center 1700/2900

UNITED STATES PATENT AND TRADEMARK OFFICE

Commissioner for Patents
United States Patent and Trademark Office
P.O. Box 1450
Alexandria, VA 22313-1450
www.uspto.gov

THE FIRM OF KARL F ROSS
5676 RIVERDALE AVENUE
PO BOX 900
BRONX, NY 10471-0900

COPY MAILED

MAR 27 2006

OFFICE OF PETITIONS

In re Application of
Hans-Dieter Fretschner et al.
Application No. 29/182,418
Filed: May 27, 2003
Attorney Docket No.: 22565

ON PETITION

This is a decision on the petition filed February 16, 2006 under 37 CFR 1.137(b),[1] to revive the above-identified application.

The petition under 37 CFR 1.137 (b) is **GRANTED**.

This application became abandoned October 17, 2005 for failure to timely respond to the Final Office Action mailed July 14, 2005 which set a three (3) month shortened statutory period for reply. A response filed October 12, 2005 did not place the application in condition for Allowance. An Advisory Action was mailed November 28, 2005 and the instant petition and this decision precede the mailing of the Notice of Abandonment.

Petitioner requested that the supplemental amendment filed on even date with the petition to revive be accepted or in the alternative that the petition to revive be considered. Since the application has been abandoned since October 17, 2005, the

---

[1] Effective December 1, 1997, the provisions of 37 CFR 1.137(b) now provide that where the delay in reply was unintentional, a petition may be filed to revive an abandoned application or a lapsed patent pursuant to 37 CFR 1.137(b). A grantable petition filed under the provisions of 37 CFR 1.137(b) must be accompanied by:

(1) the required reply, unless previously filed. In a nonprovisional application abandoned for failure to prosecute, the required reply may be met by the filing of a continuing application. In a nonprovisional application filed on or after June 8, 1995, and abandoned for failure to prosecute, the required reply may also be met by the filing of a request for continued examination in compliance with § 1.114. In an application or patent, abandoned or lapsed for failure to pay the issue fee or any portion thereof, the required reply must be the payment of the issue fee or any outstanding balance thereof.

(2) the petition fee as set forth in 37 CFR 1.17(m);

(3) a statement that the entire delay in filing the required reply from the due date for the reply until the filing of a grantable petition pursuant to 37 CFR 1.137(b) was unintentional. The Commissioner may required additional information where there is a question whether the delay was unintentional; and

(4) any terminal disclaimer (and fee as set forth in 37 CFR 1.20(d)) required pursuant to 37 CFR 1.137(c)).

amendment could not have been considered without the petition to revive.

The Examiner has indicated that the amendment filed February 16, 2006 places the application in condition for allowance and as a result, there is no need to enter the Notice of Appeal.

However, the petition does not satisfy requirement (4) of the regulation.

Petitioner must submit a Terminal Disclaimer with any renewed petition since this is a design application and then the Notice of Appeal will be entered. **Petitioner should note that submission of any renewed petition without the required reply will be construed as intentional delay.**

Further correspondence with respect to this matter should be addressed as follows:

By mail: Mail Stop Petitions
Commissioner for Patents
P.O. Box 1450
Alexandria VA 22313-1450

By FAX: (571) 273-8300
ATTN: Office of Petitions

Telephone inquiries concerning this matter may be directed to the undersigned Petitions Attorney at (571) 272-3212.

Patricia Faison-Ball

Patricia Faison-Ball
Senior Petitions Attorney
Office of Petitions

UNITED STATES PATENT AND TRADEMARK OFFICE

Commissioner for Patents
United States Patent and Trademark Office
P.O. Box 1450
Alexandria, VA 22313-1450
www.uspto.gov

THE FIRM OF KARL F ROSS
5676 RIVERDALE AVENUE
PO BOX 900
BRONX, NY 10471-0900

COPY MAILED
APR 24 2006
OFFICE OF PETITIONS

In re Application of :
Hans-Dieter Fretschner et al. :
Application No. 29/182,418 : ON PETITION
Filed: May 27, 2003 :
Attorney Docket No.: 22565 :

This is a decision on the renewed petition filed April 6, 2006 under 37 CFR 1.137(b),[1] to revive the above-identified application.

The petition under 37 CFR 1.137 (b) is **GRANTED**.

This application became abandoned October 17, 2005 for failure to timely respond to the Final Office Action mailed July 14, 2005 which set a three (3) month shortened statutory period for reply. A response filed October 12, 2005 did not place the application in condition for Allowance. An Advisory Action was mailed November 28, 2005. In response thereof and prior to the mailing of the Notice of Abandonment, a petition was filed February 16, 2006. That petition was dismissed in a decision mailed March 27, 2006 because the petition was not accompanied by a terminal disclaimer.

Comes now petitioner with the instant renewed petition and a terminal disclaimer. Per

---

[1]Effective December 1, 1997, the provisions of 37 CFR 1.137(b) now provide that where the delay in reply was unintentional, a petition may be filed to revive an abandoned application or a lapsed patent pursuant to 37 CFR 1.137(b). A grantable petition filed under the provisions of 37 CFR 1.137(b) must be accompanied by:

(1) the required reply, unless previously filed. In a nonprovisional application abandoned for failure to prosecute, the required reply may be met by the filing of a continuing application. In a nonprovisional application filed on or after June 8, 1995, and abandoned for failure to prosecute, the required reply may also be met by the filing of a request for continued examination in compliance with § 1.114. In an application or patent, abandoned or lapsed for failure to pay the issue fee or any portion thereof, the required reply must be the payment of the issue fee or any outstanding balance thereof.

(2) the petition fee as set forth in 37 CFR 1.17(m);

(3) a statement that the entire delay in filing the required reply from the due date for the reply until the filing of a grantable petition pursuant to 37 CFR 1.137(b) was unintentional. The Commissioner may required additional information where there is a question whether the delay was unintentional; and

(4) any terminal disclaimer (and fee as set forth in 37 CFR 1.20(d)) required pursuant to 37 CFR 1.137(c)).

the verbal authorization of Andrew Wilford, attorney of record with registration no. 26,597, the fee for the terminal disclaimer in the amount of $130.00 has been charged to deposit account no. 18-2025. As well, since the Examiner has indicated that the Notice of Appeal is not necessary and won't be processed, the Notice of Appeal Fee in the amount of $500.00 will be credited to deposit account no. 18-2025.

All other requirements of 37 CFR 1.137(b), including the filing of a terminal disclaimer, having now been met, this matter is being referred to Technology Center 2915 for appropriate treatment of the amendment filed February 16, 2006.

Telephone inquiries concerning this matter may be directed to the undersigned Petitions Attorney at (571) 272-3212.

Patricia Faison-Ball

Patricia Faison-Ball
Senior Petitions Attorney
Office of Petitions

UNITED STATES PATENT AND TRADEMARK OFFICE

Commissioner for Patents
United States Patent and Trademark Office
P.O. Box 1450
Alexandria, VA 22313-1450
www.uspto.gov

LERNER AND GREENBERG, P.A.
Post Office Box 2480
Hollywood FL 33022-2480

COPY MAILED

DEC 0 8 2004

OFFICE OF PETITIONS

In re Patent No. D493581	
Issue Date: July 27, 2004	DECISION ON PETITION
Application No. 29/182,517	UNDER 37 CFR 1.55(a)
Filed: May 28, 2003	
Attorney Docket No. ZTP02M01432-F	

This is a decision on the petition under 37 CFR 1.55(a), filed July 15, 2004 (certificate of mailing date July 12, 2004), for entry of a priority document submitted after the date the issue fee was paid.

The petition is **granted**.

Receipt is acknowledged of papers submitted under 35 USC 119. The priority papers have been placed in the application file and are accepted as timely filed.

Patent No. D493581 contains the priority claim information. Therefore, it is unnecessary for patentee to request a certificate of correction under 35 USC 255 and 1.323.

Any questions concerning this decision on petition should be directed to the undersigned at (571) 272-3230.

The application file is being forwarded to Files Repository.

E. Shirene Willis

E. Shirene Willis
Senior Petitions Attorney
Office of Petitions
Office of the Deputy Commissioner
for Patent Examination Policy

UNITED STATES PATENT AND TRADEMARK OFFICE

Commissioner for Patents
United States Patent and Trademark Office
P.O. Box 1450
Alexandria, VA 22313-1450
www.uspto.gov
DIW 01-05

LERNER AND GREENBERG, P.A.
POST OFFICE BOX 2480
HOLLYWOOD FL 33022-2480

COPY MAILED

JAN 1 8 2005

OFFICE OF PETITIONS

In re Application of	:	
Ott et al.	:	
Application No. 29/182,520	:	DECISION GRANTING
Filed: 28 May, 2003	:	PETITION
Attorney Docket No. ZTP02M01432-J	:	

This is a decision on the petition under 37 CFR 1.55(a), filed on 15 July, 2004, for entry of priority papers submitted after the date the issue fee was paid.

The petition is **granted**.

Receipt is acknowledged of papers submitted under 35 USC 119.

The priority papers are accepted as timely filed and have been placed of record in the file.

Any questions concerning this decision on petition should be directed to Senior Petitions Attorney Douglas I. Wood at (571) 272-3231.

Frances Hicks

Frances M. Hicks
Lead Paralegal
Office of Petitions
Office of the Deputy Commissioner
for Patent Examination Policy

UNITED STATES PATENT AND TRADEMARK OFFICE

COMMISSIONER OF PATENTS

December 28, 2004

Judith M. Riley
Anderson & Citkowski
280 N. Old Woodward, Suite 400
Birmingham, MI 48009

In re Application of:
Erik Lipson
Serial No: 29/182,682 On Petition
Filing Date: May 30, 2003
For: ICE CREAM CONE SPORTS BOTTLE

In response to the petition received December 20, 2004, to withdraw the holding of abandonment in the above application.

The petition is Granted.

The above-identified application became abandoned for failure to reply with the meaning of 37 C.D.R 1.113 in a timely manner to the Notice to File Missing Parts of Non Provisional Application mailed July 7, 2003. Which set forth a shortened statutory period for reply of two months. Accordingly, the above-identified application became abandoned September 8, 2003.

The application was abandoned in error. The office regrets any inconvenience this may have caused the client.

The application has been completed with the documents received on December 21,2004 for release to Technology Center 2900.

Telephone inquiries concerning this application may be directed to Doshie E. Day (703) 308-3640.

Doshie E. Day
Program Management Assistant
Office of Initial Patent Examination

UNITED STATES PATENT AND TRADEMARK OFFICE

COMMISSIONER OF PATENTS

December 28, 2004

Judith M. Riley
Anderson & Citkowski
280 N. Old Woodward, Suite 400
Birmingham, MI 48009

In re Application of:
Erik Lipson
Serial No: 29/182,682 On Petition
Filing Date: May 30, 2003
For: ICE CREAM CONE SPORTS BOTTLE

In response to the petition received December 20, 2004, to withdraw the holding of abandonment in the above application.

The petition is Granted.

The above-identified application became abandoned for failure to reply with the meaning of 37 C.D.R 1.113 in a timely manner to the Notice to File Missing Parts of Non Provisional Application mailed July 7, 2003. Which set forth a shortened statutory period for reply of two months. Accordingly, the above-identified application became abandoned September 8, 2003.

The application was abandoned in error. The office regrets any inconvenience this may have caused the client.

The application has been completed with the documents received on December 21,2004 for release to Technology Center 2900.

Telephone inquiries concerning this application may be directed to Doshie E. Day (703) 308-3640.

Doshie E. Day
Program Management Assistant
Office of Initial Patent Examination

UNITED STATES PATENT AND TRADEMARK OFFICE

Commissioner for Patents
United States Patent and Trademark Office
P.O. Box 1450
Alexandria, VA 22313-1450
www.uspto.gov

VARNUM, RIDDERING, SCHMIDT & HOWLETT LLP
333 BRIDGE STREET, NW
P.O. BOX 352
GRAND RAPIDS MI 49501-0352

MAILED

FEB 02 2010

OFFICE OF PETITIONS

In re Application of :
Norman R. Byrne :
Application No. 29/182,692 : ON PETITION
Filed: May 30, 2003 :
Attorney Docket No. **BYRNE P212US** :

This is a decision on the petition under 37 CFR 1.137(b), filed on October 5, 2009, to revive the above-identified application.

The petition is **DISMISSED**.

Any request for reconsideration of this decision must be submitted within **TWO (2) MONTHS** from the mail date of this decision. Extensions of time under 37 CFR 1.136(a) are permitted. The reconsideration request should include a cover letter entitled "Renewed Petition under 37 CFR 1.137(b)." This is **not** a final agency action within the meaning of 5 U.S.C. § 704.

The above-identified application became abandoned for failure to submit corrected drawings in a timely manner in reply to the Notice of Allowability mailed June 3, 2004, which set a period for reply of three (3) months. Accordingly, this application became abandoned on September 4, 2004.

A grantable petition under 37 CFR 1.137(b) must be accompanied by: (1) the required reply, unless previously filed; (2) the petition fee as set forth in 37 CFR 1.17(m); (3) a statement that the entire delay in filing the required reply from the due date for the reply until the filing of a grantable petition pursuant to 37 CFR 1.137(b) was unintentional; and (4) any terminal disclaimer (and fee as set forth in 37 CFR 1.20(d)) required by 37 CFR 1.137(d). Where there is a question as to whether either the abandonment or the delay in filing a petition under 37 CFR 1.137 was unintentional, the Commissioner may require additional information. See MPEP 711.03(c)(III)(C) and (D). The instant petition lacks item(s) (1).

The petition does not satisfy item (1) in that the drawings filed October 5, 2009, lack the labeling "Replacement Sheet" for compliance with 37 CFR 1.84(c) and 37 CFR 1.121(d) required by the Notice. This application can not be granted until the item noted above is corrected.

Further correspondence with respect to this matter should be addressed as follows:

By Mail: Mail Stop PETITION
Commissioner for Patents
P.O. Box 1450
Alexandria, VA 22313-1450

By hand: U. S. Patent and Trademark Office
Customer Service Window, Mail Stop Petitions
Randolph Building
401 Dulany Street
Alexandria, VA 22314

The centralized facsimile number is **(571) 273-8300.**

Telephone inquiries concerning this decision should be directed to the undersigned at (571) 272-4584.

JoAnne Burke
Petitions Examiner
Office of Petitions

UNITED STATES PATENT AND TRADEMARK OFFICE

Commissioner for Patents
United States Patent and Trademark Office
P.O. Box 1450
Alexandria, VA 22313-1450
www.uspto.gov

VARNUM, RIDDERING, SCHMIDT & HOWLETT LLP
333 BRIDGE STREET, NW
P.O. BOX 352
GRAND RAPIDS MI 49501-0352

MAILED

MAR 30 2010

OFFICE OF PETITIONS

In re Application of :
Norman R. Byrne :
Application No. 29/182,692 :
Filed: May 30, 2003 :
Attorney Docket No. **BYRNE P212US** :

ON PETITION

This is a decision on the renewed petition under 37 CFR 1.137(b), filed on February 25, 2010, to revive the above-identified application.

The petition is **GRANTED**.

The above-identified application became abandoned for failure to submit corrected drawings in a timely manner in reply to the Notice of Allowability mailed June 3, 2004, which set a period for reply of three (3) months. Accordingly, this application became abandoned on September 4, 2004.

The petition satisfies the requirements of 37 CFR 1.137(b) in that petitioner has supplied (1) the reply in the form of corrected formal drawings, (2) the petition fee of $1,620; and (3) a proper statement of unintentional delay and (4) a terminal disclaimer and fee as required by 37 CFR 1.137(d).

The terminal disclaimer is accepted and has been made of record. Any continuing application filed from this application must contain a copy of the terminal disclaimer. The copy of the terminal disclaimer must be filed with a cover letter requesting the terminal disclaimer be recorded on the continuing application. A copy of this decision should be attached to the cover letter.

Telephone inquiries concerning this decision should be directed to JoAnne Burke at (571)272-4584.

This application is being referred to the Office of Data Management to be processed into a patent.

JoAnne Burke
Petitions Examiner
Office of Petitions